UNITED STATES OF AMERICA
BEFORE THE
FEDERAL ENERGY REGULATORY COMMISSION

North American Electric Reliability Corporation	**)**	**Docket No. _____**
	)	

PETITION OF THE NORTH AMERICAN ELECTRIC RELIABILITY CORPORATION FOR APPROVAL OF PROPOSED RELIABILITY STANDARD CIP-014-4

Lauren A. Perotti
Assistant General Counsel
Sarah P. Crawford
Senior Counsel
North American Electric Reliability Corporation
1401 H Street, N.W., Suite 410
Washington, D.C. 20005
(202) 400-3000
(202) 644-8099 – facsimile
lauren.perotti@nerc.net
sarah.crawford@nerc.net

Counsel for the North American Electric Reliability Corporation

July 16, 2026

TABLE OF CONTENTS

I. SUMMARY 3
II. NOTICES AND COMMUNICATIONS 4
III. REGULATORY BACKGROUND 4
A. Regulatory Framework 4
B. NERC Reliability Standards Development Procedure 5
C. Need for Reform 6
IV. JUSTIFICATION FOR APPROVAL 9
A. Title and Purpose 10
B. Applicability: 11
C. Requirement R1 11
D. Requirement R2 13
E. Requirement R3 15
F. Proposed Requirement R4 22
G. Requirement R5 23
1. Proposed Requirement R5 Part 5.1 25
2. Proposed Requirement R5 Part 5.2 25
3. Proposed Requirement R5 Part 5.3 26
H. Requirements R6, R7, R8, R9 and R10 27
V. Enforceability 28
VI. EFFECTIVE DATE OF THE PROPOSED RELIABILITY STANDARDS 29
VII. CONCLUSION 31

Exhibit A The Proposed Reliability Standard
Exhibit A-1 CIP-014-4 Clean
Exhibit A-2 CIP-014-4 Redline to Last FERC-Approved

Exhibit B Implementation Plan
Exhibit C Technical Rationale
Exhibit D Order No. 672 Criteria
Exhibit E Analysis of Violation Risk Factors and Violation Severity Levels
Exhibit F Summary of Development and Complete Record of Development
Exhibit G Standard Drafting Team Roster, Project 2023-06 CIP-014 Risk Assessment Refinement

UNITED STATES OF AMERICA
BEFORE THE
FEDERAL ENERGY REGULATORY COMMISSION

North American Electric Reliability Corporation	**)**	**Docket No. _____**
	)	

PETITION OF THE NORTH AMERICAN ELECTRIC RELIABILITY CORPORATION FOR APPROVAL OF PROPOSED RELIABILITY STANDARD CIP-014-4

Pursuant to Section 215(d)(1) of the Federal Power Act ("FPA")[1] and Section 39.5[2] of the Federal Energy Regulatory Commission's ("FERC" or "Commission") regulations, the North American Electric Reliability Corporation ("NERC")[3] hereby submits for Commission approval proposed Reliability Standard CIP-014-4 (Physical Security).[4] The purpose of Reliability Standard CIP-014 is to identify and protect Transmission stations and Transmission substations, and their associated primary control centers, that if rendered inoperable or damaged due to a physical attack, could cause instability, uncontrolled separation, or Cascading within an Interconnection. Proposed Reliability Standard CIP-014-4 will further reliability by assuring that Reliability Standard CIP-014 provides an adequate and consistent approach for evaluating instability and identifying infrastructure critical to the operation of the Bulk-Power System ("BPS"). These revisions address the concerns in NERC's *Evaluation of the Physical Security Reliability Standard and Physical*

---

1 16 U.S.C. § 824o.

2 18 C.F.R. § 39.5 (2026).

3 The Commission certified NERC as the electric reliability organization ("ERO") in accordance with Section 215 of the FPA on July 20, 2006. *N. Am. Elec. Reliability Corp.*, 116 FERC ¶ 61,062 (2006) [hereinafter ERO Certification Order], *order on reh'g & compliance*, 117 FERC ¶ 61,126 (2006), *aff'd sub nom. Alcoa, Inc. v. FERC*, 564 F.3d 1342 (D.C. Cir. 2009).

4 Unless otherwise indicated, all capitalized terms used in this petition shall have the meaning set forth in the *Glossary of Terms used in NERC Reliability Standards* ("NERC Glossary"), https://www.nerc.com/glossary-of-terms.

Security Attacks to the Bulk-Power System[5] ("CIP-014 Report") that there has been inconsistency in registered entity CIP-014-3 risk assessments to most appropriately identify critical infrastructure.

NERC requests that the Commission approve proposed Reliability Standard CIP-014-4, as shown in **Exhibit A**, as just, reasonable, not unduly discriminatory or preferential, and in the public interest. NERC also requests that the Commission approve: (i) the associated Implementation Plan (**Exhibit B**), (ii) the associated Violation Risk Factors ("VRFs") and Violation Severity Levels ("VSLs") (**Exhibit E**); and (iii) the retirement of proposed Reliability Standard CIP-014-3.

As required by Section 39.5(a)[6] of the Commission's regulations, this petition presents the technical basis and purpose of the proposed Reliability Standard, a demonstration that the proposed Reliability Standard meets the criteria identified by the Commission in Order No. 672[7] (**Exhibit D**), and a summary of the standard development history (**Exhibit F**). The NERC Board of Trustees adopted the proposed Reliability Standard on June 17, 2026.

This petition is organized as follows: Section I provides a summary of the proposed Reliability Standard, the December 2022 FERC Order[8] directing NERC to evaluate CIP-014, and the resulting CIP-014 Report that was filed by NERC with the Commission that resulted in the development of CIP-014-4. Section II of the petition provides the individuals to whom notices and communications related to the filing should be provided. Section III provides relevant background

---

5 *See Evaluation of the Physical Security Reliability Standard and Physical Security Attacks to the Bulk-Power System,* Docket No. RD23-2-000 (Apr. 14, 2023) [hereinafter CIP-014 Report].

6 18 C.F.R. § 39.5(a).

7 The Commission specified in Order No. 672 certain general factors it would consider when assessing whether a particular Reliability Standard is just and reasonable. *Rules Concerning Certification of the Electric Reliability Organization; and Procedures for the Establishment, Approval, and Enforcement of Electric Reliability Standards*, Order No. 672, 114 FERC ¶ 61,104 at PP 262, 321-37 [hereinafter Order No. 672], *order on reh'g*, Order No. 672-A, 114 FERC ¶ 61,328 (2006).

8 *N. Am. Elec. Reliability Corp*., 181 FERC ¶ 61,230 (2022) [hereinafter December 2022 Order].

regarding the regulatory structure governing the Reliability Standards approval process. Section IV provides a brief summary of the development process for the proposed Reliability Standard. Section V of the petition addresses the need for the proposed revisions. Section VI of the petition provides an overview and justification for the proposed Reliability Standard. Section VII of the petition provides a summary of the proposed implementation plan.

I. SUMMARY

The CIP Reliability Standards provide a risk-based, defense-in-depth approach to securing the Bulk Electric System ("BES") against cyber and physical security threats. On December 15, 2022, due to an increase in reports of physical attacks on electric substations, FERC issued an order in Docket No. RD23-2-000 that directed NERC to evaluate the effectiveness of the Physical Security Reliability Standard CIP-014-3 in mitigating the risks to the BPS associated with physical attacks.[9] On April 14, 2023, NERC filed the CIP-014 Report with FERC in satisfaction of the Commission's directive.[10] In the CIP-014 Report, NERC identified continuing inconsistency in registered entity CIP-014 risk assessments to most appropriately identify critical infrastructure. NERC recommended that CIP-014 be revised to assure an adequate and consistent approach in evaluating instability as well as the identification of infrastructure critical to the operation of the BPS.

As discussed in detail herein, proposed Reliability Standard CIP-014-4 addresses these recommendations and provides an adequate and consistent approach for evaluating instability and identifying critical infrastructure. NERC respectfully requests that the Commission approve proposed Reliability Standard CIP-014-4 and the associated elements as just, reasonable, not unduly discriminatory or preferential, and in the public interest.

---

9 *Id.*

10 *See* CIP-014 Report.

II. NOTICES AND COMMUNICATIONS

Notices and communications with respect to this filing may be addressed to the following:[11]

Lauren A. Perotti*
Assistant General Counsel
Sarah P. Crawford*
Senior Counsel
North American Electric Reliability Corporation
1401 H Street NW
Suite 410
Washington, D.C. 20005
(202) 400-3000
(202) 644-8099 – facsimile
lauren.perotti@nerc.net
sarah.crawford@nerc.net

Soo Jin Kim*
Vice President, Standards and Registration
Jamie Calderon*
Director, Standards Development
North American Electric Reliability Corporation
1401 H St NW
Suite 410
Washington, D.C. 20005
(202) 400-3000
(202) 644-8099 – facsimile
soo.jin.kim@nerc.net
jamie.calderon@nerc.net

III. REGULATORY BACKGROUND

A. Regulatory Framework

By enacting the Energy Policy Act of 2005,[12] Congress entrusted the Commission with the duties of approving and enforcing rules to ensure the reliability of the BPS, and with the duties of certifying an ERO that would be charged with developing and enforcing mandatory Reliability Standards, subject to Commission approval. Section 215(b)(1)[13] of the FPA states that all users, owners, and operators of the BPS in the United States will be subject to Commission-approved Reliability Standards. Section 215(d)(5)[14] of the FPA authorizes the Commission to order the ERO to submit a new or modified Reliability Standard. Section 39.5(a)[15] of the Commission's

[11] Persons to be included on the Commission's service list are indicated with an asterisk. NERC requests a waiver of 18 C.F.R. § 385.203(b) to permit the inclusion of more than two people on the service list.

[12] 16 U.S.C. § 824o.

[13] *Id.* § 824o(b)(1).

[14] *Id.* § 824o(d)(5).

[15] 18 C.F.R. § 39.5(a).

regulations requires the ERO to file with the Commission for its approval each new Reliability Standard that the ERO proposes should become mandatory and enforceable in the United States, and each modification to a Reliability Standard that the ERO proposes should be made effective.

The Commission is vested with the regulatory responsibility to approve Reliability Standards that protect the reliability of the BPS and to ensure that Reliability Standards are just, reasonable, not unduly discriminatory or preferential, and in the public interest. Pursuant to Section 215(d)(2) of the FPA[16] and Section 39.5(c)[17] of the Commission's regulations, the Commission will give due weight to the technical expertise of the ERO with respect to the content of a Reliability Standard.

B. NERC Reliability Standards Development Procedure

The proposed Reliability Standard was developed in an open and fair manner and in accordance with the Commission-approved Reliability Standard development process. NERC develops Reliability Standards in accordance with Section 300 (Reliability Standards Development) of its Rules of Procedure and the NERC Standard Processes Manual.[18]

In its order certifying NERC as the Commission's ERO, the Commission found that NERC's rules provide for reasonable notice and opportunity for public comment, due process, openness, and a balance of interests in developing Reliability Standards,[19] and thus satisfy several of the Commission's criteria for approving Reliability Standards.[20] The development process is open to any person or entity with a legitimate interest in the reliability of the BPS. NERC considers

16 16 U.S.C. § 824o(d)(2).

17 18 C.F.R. § 39.5(c)(1).

18 The NERC Rules of Procedure, including Appendix 3A, NERC Standard Processes Manual, are available at https://www.nerc.com/who-we-are/rules-of-procedure.

19 ERO Certification Order at P 250.

20 Order No. 672 at PP 268, 270.

the comments of all stakeholders. Stakeholders must approve, and the NERC Board of Trustees must adopt, a new or revised Reliability Standard before NERC submits the Reliability Standard to the Commission for approval.

C. Need for Reform

On December 15, 2022, the Commission directed NERC to conduct a study evaluating (1) the adequacy of the Applicability criteria set forth in the Physical Security Reliability Standard CIP-014-3 (Physical Security Reliability Standard); (2) the required risk assessment set forth in the Physical Security Reliability Standard, including possible improvements to Requirement R1 by providing additional parameters or criteria regarding how applicable entities should conduct the required risk assessment; and (3) whether a minimum level of physical security protections should be required for all Bulk-Power System transmission stations and substations and primary control centers.[21] The Commission explained that it was directing this evaluation because "there has been an increase in reports of physical attacks on electric substations", some of which resulted in thousands of customer outages.[22] Specifically, the Commission cited the December 3, 2022 physical attacks on substations in Moore County, North Carolina, the November 2022 incidents at several Pacific Northwest substations that resulted in damage to substation equipment as well as customer outages, and the fact that Federal authorities had disrupted recent planned attacks before they were perpetrated.[23] The Commission directed that NERC submit a report to the Commission

---

[21] December 2022 Order at PP 1, 8.

[22] *Id.* at P 6.

[23] *Id.* at P 6 (citing Duke Energy, *Duke Energy completes restoration to all customers in Moore County and surrounding counties* (Dec. 8, 2022), https://news.duke-energy.com/releases/duke-energy-completes-restoration-to-all-customers-in-moore-county-and-surrounding-counties; *see also* John Miller, Steve Almasy, and Whitney Wild, *Investigators are zeroing in on two possible motives centered around extremist behavior in NC power stations attacks*, CNN (Dec. 7, 2022), https://www.cnn.com/2022/12/07/us/power-outage-moore-county-investigation-wednesday/index.html; Lauren Girgis and Hal Bernton, *PSE substations among six attacked in Pacific Northwest in November*, The Seattle Times (Dec. 8, 2022), https://www.seattletimes.com/seattle-news/law-justice/pse-substations-among-five-attacked-in-pacific-northwest-in-november/; and U.S., Dep't. of Just., *Three Men Plead*

describing the study's findings and recommendations within 120 days of the date of the order.[24]

In response to the directive in the December 2022 Order, NERC submitted to FERC its CIP-014 Report on April 14, 2023.[25] In the CIP-014 Report, NERC found that the objective of CIP-014 appropriately focuses limited industry resources on risks to the reliable operation of the BPS associated with physical security incidents at the most critical facilities.[26] Based on studies using available data, NERC concluded that the CIP-014 Applicability criteria is meeting that objective and is broad enough to capture the subset of applicable facilities that Transmission Owners should identify as "critical" pursuant to the risks assessment mandated by Requirement R1.[27] NERC did not find evidence that an expansion of the Applicability criteria would identify additional substations that would qualify as "critical" substations under the CIP-014 Requirement R1 risk assessment, and thus did not recommend expansion of the CIP-014 Applicability criteria.[28]

In the CIP-014 Report, NERC found that the CIP-014 Requirement R1 risk assessment requires applicable Transmission Owners to study whether the loss of an applicable substation could result in instability, uncontrolled separation, or Cascading. It found that while the objective of these assessments is appropriate, there should be additional clarification as how registered entities must conduct the assessments and recommended that the language in Requirement R1 of CIP-014 be refined to ensure that entities conduct effective risk assessments of their applicable substations.[29] In the CIP-014 Report, NERC explained that information from ERO Enterprise Compliance Monitoring and Enforcement Program ("CMEP") activities indicated that while the

Guilty to Conspiring to Provide Material Support to a Plot to Attack Power Grids in the United States (Feb. 23, 2022), https://www.justice.gov/opa/pr/three-men-plead-guilty-conspiring-provide-material-support-plot-attack-power-grids-united).

24 *Id.* at P 8.

25 CIP-014 Report.

26 *Id.* at 4.

27 *Id.*

28 *Id.*

29 *Id.* at 5, 18.

overall objective of the CIP-014 Requirement R1 risk assessment was sound, that registered entities have inconsistent approaches to performing the risk assessment that did not always meet the technical rigor expected for other planning horizon study assessment-related Reliability Standards, such as TPL-001.[30] In the CIP-014 Report, NERC observed that, in certain instances, registered entities failed to provide sufficient technical studies or justification for study decisions resulting in noncompliance.[31]

In the CIP-014 Report, NERC further noted that the requirement language within CIP-014-3 does not prescribe a specific method for how each risk assessment shall be performed. As such, specific components that comprise any supporting analytics are neither defined nor listed.[32] As written, Reliability Standard CIP-014-3 provides intentional flexibility for various approaches to the risk assessment due to expected differences in each registered entity's facts and circumstances. However, NERC found that flexibility does not alter the intent of Reliability Standard CIP-014-3 that each risk assessment must be "designed to identify" which applicable Transmission station(s) and Transmission substation(s), that if rendered inoperable or damaged, could result in instability, uncontrolled separation, or Cascading within an Interconnection.[33] Registered entities may implement different approaches to complete this objective, but the approach must be able to accomplish the fundamental obligation of the requirement through effectively assessing all required adverse system conditions with sufficient supporting technical analyses.[34]

Further, NERC noted that in certain instances registered entities failed to provide sufficient technical studies or justification for study decisions, resulting in risk assessments that did not

30 *Id.*

31 *Id.* at 5.

32 *Id.* at 21 (quoting CMEP Practice Guide for CIP-014-3 R1).

33 *Id.*

34 *Id.*

demonstrate effective evaluations for instability, uncontrolled separation, or Cascading within an Interconnection. The CIP-014 Report concluded that inconsistent approaches in performing risk assessments is largely due to a lack of specificity in the requirement language as to the nature and parameters of the risk assessment.[35]

Accordingly, NERC initiated a Standard Authorization Request ("SAR") and commenced a Reliability Standards development project, Project 2023-06 Risk Assessment Refinement, to evaluate changes to CIP-014 to provide additional clarity on the requirements for the risk assessment.[36]

IV. JUSTIFICATION FOR APPROVAL

In this petition, NERC submits for Commission approval proposed Reliability Standard CIP-014-4 –Physical Security. Proposed Reliability Standard CIP-014-4 consists of ten requirements that include material revisions to Requirement R1, new Requirements R2, R3, R4, and R5, and non-substantive revisions to Requirements R6 through R10. As discussed below and in **Exhibit C**, the proposed Reliability Standard will enhance reliability by ensuring an adequate and consistent approach in evaluating instability as well as the identification of Transmission stations, Transmission substations, and their associated primary control centers that are critical to the operation of the BPS. Specifically, the proposed revisions would: (1) clarify the risk assessment methods for studying instability, uncontrolled separation, and Cascading within an Interconnection, including accounting for dynamic studies; (2) clarify the case(s) used for the risk assessment, by tailoring them to the Requirement R1 in-service window and correcting discrepancies between the study period, frequency of study, and the base case(s) a Transmission

35 *Id.* at 5, 24.

36 *Id.* at 5.

Owner uses; (3) assure the adequacy and consistent implementation of technically supported justification for study decisions; (4) clarify what study scenarios and other study assumptions are appropriate and reasonable considering the potential range of issues during a physical attack, including the loss of station elements without the reliance on local system protection; and (5) clarify how to account for adjacent Transmission stations or Transmission substations of differing ownership as well as for those Transmission stations or Transmission substations within line-of-sight to each other by providing clear expectations regarding the inclusion of physically adjacent elements for the purpose of evaluating the impact from a physical attack.

As explained in **Exhibit F**, NERC developed the proposed Reliability Standard using NERC's standard development process. This process included multiple public comment and ballot periods. The NERC Board of Trustees adopted the proposed Reliability Standard on June 17, 2026.

Below, NERC provides an overview of the proposed revisions, with a summary of the supporting rationale. Additional information may be found in the Technical Rationale for Proposed Reliability Standard CIP-014-4, included as **Exhibit C** to this petition, as well as the Complete Record of Development, included as **Exhibit F**.

A. Title and Purpose

The title of proposed Reliability Standard CIP-014-4 Physical Security remains unchanged from the current FERC-approved version.

The revisions proposed by Project 2023-06 revise the purpose to state: "To identify and protect Transmission stations and Transmission substations, and their associated primary control centers, that if rendered inoperable or damaged ~~as a result of~~due to a physical attack, could ~~result in~~ cause instability, uncontrolled separation, or Cascading within an Interconnection." These non-substantive changes were made for improved readability.

B. Applicability:

Proposed Reliability Standard CIP-014-4 will continue to apply to Transmission Owners and Operators. With respect to Transmission Owners, the language has been revised to state:

> Transmission Owner that owns ~~a~~or jointly owns one or more Transmission stations or Transmission substations that meet~~s any of the following~~ the applicability criteria~~:~~ of Attachment 1.

The revisions to the applicability reflect the inclusion of jointly owned Transmission stations and Transmission substations. In addition, Applicability subsections 4.1.1.1, 4.1.1.2, 4.1.1.3, and 4.1.1.4 have been relocated, without revision, to a new Attachment 1, to promote flow and readability.

C. Requirement R1

Proposed Reliability Standard CIP-014-4 would improve upon Reliability Standard CIP-014-3 by aligning the 30-month timeframe and the 24-month planned-to-be-in-service that could, if not carefully applied, lead to confusion, gaps between models and study horizons, or both.

Proposed Requirement R1 will ensure that each Transmission Owner establishes a list of applicable Transmission stations or Transmission substations in accordance with Attachment 1. Aligning the 36 calendar months "look ahead" in Requirement R1 with the 36-calendar month risk assessment cycle ensures that system topology of the cases used to assess applicability is consistent with the system topology in the risk assessment models.

Revised Requirement R1 states:

> **R1.** Each Transmission Owner shall, at least once every 36 calendar months, identify each applicable Transmission station and Transmission substation meeting any of the criteria in Attachment 1 that is either existing or planned to be in service within 36 calendar months. ~~shall perform an initial risk assessment and subsequent risk assessments of its Transmission stations and Transmission substations (existing and planned to be in service within 24 months) that meet the criteria specified in Applicability Section 4.1.1. The initial and subsequent risk assessments shall consist of a transmission analysis or transmission analyses designed to identify the Transmission~~

~~station(s) and Transmission substation(s) that if rendered inoperable or damaged could result in instability, uncontrolled separation, or Cascading within an Interconnection.~~

~~1.1. Subsequent risk assessments shall be performed:~~

- ~~At least once every 30 calendar months for a Transmission Owner that has identified in its previous risk assessment (as verified according to Requirement R2) one or more Transmission stations or Transmission substations that if rendered inoperable or damaged could result in instability, uncontrolled separation, or Cascading within an Interconnection; or~~
- ~~At least once every 60 calendar months for a Transmission Owner that has not identified in its previous risk assessment (as verified according to Requirement R2) any Transmission stations or Transmission substations that if rendered inoperable or damaged could result in instability, uncontrolled separation, or Cascading within an Interconnection.~~

~~1.2. The Transmission Owner shall identify the primary control center that operationally controls each Transmission station or Transmission substation identified in the Requirement R1 risk assessment.~~[37]

Under proposed Requirement R1, Transmission Owners would review and, if necessary, update the list of applicable Transmission stations or Transmission substations per Attachment 1 at least once every 36 calendar months. The list of applicable Transmission stations or Transmission substations would include existing Facilities and Transmission stations and Transmission substations planned to be in service within 36 calendar months.[38] The 36 calendar months cycle for updating the list of applicable Transmission stations or Transmission substations under Attachment 1 aligns the annual cycle for performing Planning Assessments under NERC Standard TPL-001 and the 36 month planned-to-be-in-service date.[39]

These changes address the concerns identified in the CIP-014 Report and the resulting SAR that Project 2023-06 clarify the in-service window and correct any discrepancies between the study period, frequency of study, and the Interconnection-wide base cases a Transmission Owner uses

---

37 The language from CIP-014-3 Requirement R1 Part 1.2 has been relocated and revised in part within proposed Reliability Standard CIP-014-4 Requirement R5 Part 5.2.

38 Exhibit C Technical Rationale at 1.

39 *Id.* at 1. "Planned to be in-service" means all Transmission station(s) and Transmission substation(s) as modeled in the base cases for the Near-Term Transmission Planning Horizon.

to perform the risk assessment, which are typically built on an annual frequency. In the previous version of CIP-014, the 30-month time frame and the 24-month planned to be in-service date could, if not carefully applied, lead to confusion, gaps between models and study horizons, or both. Proposed Reliability Standard CIP-014-4 has addressed these potential gaps by consolidating these multiple timelines into one.[40]

D. Requirement R2

Proposed Requirement R2 is a new requirement that clarifies how entities will account for adjacent Transmission stations or Transmission substations of differing ownership as well as Transmission stations or Transmission substations within line-of-sight to each other. This benefits reliability by providing clear expectations regarding the inclusion of physically adjacent elements for the purpose of evaluating the impact from a physical attack. The previous Requirement R2 language that was contained in Reliability Standard CIP-04-3, is largely preserved in Requirement R6, discussed *infra*.

Proposed Requirement R2 states:

> **R2.** Each Transmission Owner with applicable Transmission station(s) or Transmission substation(s) identified in Requirement R1 shall identify proximate existing Bulk Electric System (BES) Transmission station(s) and BES Transmission substation(s), irrespective of ownership, within 1500 feet or 457 meters (the shortest distance, measured substation fence line to substation fence line) of an applicable Transmission station or Transmission substation identified in Requirement R1.

In determining the appropriate distance for identifying proximate existing BES Transmission stations and BES Transmission substations for Requirement R2, the drafting team reviewed publicly available guidelines that considered a variety of plausible attack scenarios capable of rendering a substation inoperable. The drafting team choose 1500 feet or 457 meters

[40] *Id.* at 1.

(the shortest distance, measured substation fence line to substation fence line) in Requirement R2 after the Department of Homeland Security ("DHS") and Department of Justice ("DOJ") *Bomb Threat Stand-Off Card*, which is a quick reference guide providing recommended evacuation and shelter-in-place distances for various types and sizes of Improvised Explosive Devices.[41] The drafting team selected 1500 feet as an appropriate round number distance that is similar to the mandatory evacuation distance provided by the *Bomb Threat Stand-Off Card* for an attack utilizing a semi-trailer with a 60,000 pound explosive capacity.[42]

The drafting team used the guidance provided by the *Bomb Threat Stand-Off Card* to clarify which study scenarios and assumptions are appropriate and reasonable considering both the intent of CIP-014 and the potential range of issues during a physical attack. Simulations should incorporate the loss of station elements without the reliance on local system protection. The drafting team found that identifying proximate existing BES Transmission stations and BES Transmission substations within 1500 feet or 457 meters of each other appropriately accounts for adjacent Transmission stations or Transmission substations of differing ownership as well as for those Transmission stations or Transmission substations within line-of-sight to each other.[43] This distance limits what the Transmission Owner must study and provides clear and objective guidance that can be consistently implemented.

The Transmission stations or Transmission substations identified in Requirement R2 are only intended for use in the Requirement R5 risk assessment and the Requirement R6 third-party verification to properly account for additional equipment that, if also damaged during an event, could lead to loss of additional Facilities. They are not intended to be subject to Requirements R7

---

41 Cybersecurity and Infrastructure Security Agency, *DHS-DOJ Bomb Threat Stand-off Card* (2025), https://www.cisa.gov/resources-tools/resources/dhs-doj-bomb-threat-stand-card.

42 Exhibit C Technical Rationale at 2.

43 *See id.*

through R10. Requirements R7 through R10 are only relevant for the Transmission substation(s) or Transmission substation(s) identified in Requirement R1.[44]

E. Requirement R3

Proposed Requirement R3 is a new requirement. The previous Requirement R3 language that was contained in Reliability Standard CIP-04-3, is largely preserved in Requirement R7, discussed *infra*.

Proposed Requirement R3 benefits reliability by requiring each Transmission Owner to have a documented risk assessment methodology, including the criteria by which analytical results will be examined to identify Transmission stations or Transmission substations that if rendered inoperable or damaged as a result of a physical attack could result in instability, uncontrolled separation, or Cascading within an Interconnection.[45]

Proposed Requirement R3 states:

R3. Each Transmission Owner shall have a documented risk assessment methodology for evaluating the loss of each applicable Transmission station or Transmission substation identified in Requirement R1. The methodology shall include, at a minimum, the following:

- **3.1.** Documented criteria for assessing instability, uncontrolled separation, or Cascading within an Interconnection. The criteria shall include, at a minimum, technically justified thresholds identifying unacceptable generation and load loss within an Interconnection.
- **3.2.** A provision that steady-state and dynamic simulations shall each be performed using at a minimum one System peak Load case and one System Off-Peak Load case.
- **3.3.** Specifications for simulations at each applicable Transmission station or Transmission substation identified in accordance with Requirement R1 and, if applicable, at each associated proximate existing BES Transmission station(s) and BES Transmission substation(s) identified in accordance with Requirement R2, that include:
  - **3.3.1.** At the applicable Transmission station or Transmission substation:

    3.3.1.1. Prior loss of communication and Protection Systems;

---

44 *Id.*

45 *Id.*

3.3.1.2. Application of a Fault or Faults; and

3.3.1.3. Delayed (remote) clearing times shall be used unless otherwise technically substantiated.

3.3.2. At each proximate existing BES Transmission station(s) and BES Transmission substation(s), as applicable:

3.3.2.1. Application of a Fault or Faults, either simultaneous with or following the Fault or Faults applied under Part 3.3.1.2; and

3.3.2.2. Normal clearing times shall be used unless otherwise technically substantiated.

3.3.3. A documented justification for the Fault(s) associated with physical attack to be simulated. A single justification may be used for multiple locations. The justification shall include at a minimum:

3.3.3.1. The type of credible high-severity physical attack considered; and

3.3.3.2. The type of Fault(s) selected based upon the attack considered.

3.3.4. Removal of all Elements that Protection Systems and other controls are expected to automatically disconnect.

3.3.5. Actual or more conservative clearing times shall be used.

1. Proposed Requirement R3 Part 3.1

Proposed Requirement R3 Part 3.1 is a new requirement that states:

3.1. Documented criteria for assessing instability, uncontrolled separation, or Cascading within an Interconnection. The criteria shall include, at a minimum, technically justified thresholds identifying unacceptable generation and load loss within an Interconnection.

Under Proposed Requirement R3 Part 3.1, Transmission Owners determine the amount of unacceptable load loss and generation loss within an Interconnection when determining the impact of an event to the Transmission system. The thresholds used for identifying unacceptable generation and load losses should be the total of the losses within the Transmission Owner's footprint and losses external to the Transmission Owner's footprint. Criteria for measures such as load loss or generation loss should consider the impact to the Interconnection.[46]

[46] Exhibit C Technical Rationale at 3. While the use of Resource Loss Protection Criteria (RLPC) provides one approach to generation loss—setting these thresholds based on the two largest potential resource losses in an

Under proposed Requirement R3 Part 3.1, the criteria used for determining critical Transmission stations or Transmission substations, i.e., those that if rendered inoperable or damaged as a result of a physical attack could result in instability, uncontrolled separation, or Cascading within an Interconnection, should be part of the documented risk assessment methodology.[47] Proposed Requirement R3 Part 3.1 allows Transmission Owner to identify post-event measures, e.g., steady state voltages, transient voltage response, thermal loading of Facilities, relay loadability, rotor angle stability, frequency exceeding generator limits, frequency stability, acceptable damping of oscillations, Cascading line tripping, and steady-state voltage stability, to assess the criticality of a Transmission station or Transmission substation.[48]

2. Proposed Requirement R3 Part 3.2

Proposed Requirement R3 Part 3.2 states:

> **3.2** A provision that steady-state and dynamic simulations shall each be performed using at a minimum one System peak Load case and one System Off-Peak Load case.

Proposed Requirement R3 Part 3.2 requires the performance of both steady state and dynamics simulations for all applicable Transmission station(s) and substation(s). Dynamic simulations are required because exclusively performing steady-state simulations are insufficient for determining whether the loss of a Transmission station or Transmission substation could result in instability, uncontrolled separation, or Cascading within an Interconnection.[49]

3. Proposed Requirement R3 Part 3.3

Interconnection as detailed in Attachment A of NERC Reliability Standard BAL-003-2—other methods may also be appropriate, as determined by the Transmission Owner. The RLPC values should be taken from the latest approved version of NERC's annual 'Frequency Response Annual Analysis' report. Use of lower values than the RLPC recommendations is also technically justifiable. Use of higher values than the RLPC recommendations would require additional technical justification.

47 *Id.* at 3.

48 *Id.* at 3-4.

49 Exhibit C Technical Rationale at 4.

Proposed Requirement R3 Part 3.3 sets forth the specifications for simulations that are required to be documented in each Transmission Owner's risk methodology. These revisions clarify the study scenarios and other study assumptions that are appropriate and reasonable considering the intent of CIP-014 and the potential range of issues during a physical attack. During the development of Requirement R3, the drafting team considered requiring simulation of a three-phase Fault at applicable Transmission stations and Transmission substations; however, it determined that there may be specific locations or scenarios that merit the use of a different Fault type (or a sequence or progression of multiple Faults) more consistent with the occurrence of a physical attack for those locations or scenarios.[50]

Proposed Requirement R3 Part 3.3 states:

> **3.3** Specifications for simulations at each applicable Transmission station or Transmission substation identified in accordance with Requirement R1 and, if applicable, at each associated proximate existing BES Transmission station(s) and BES Transmission substation(s) identified in accordance with Requirement R2, that include:
>
> **3.3.1** At the applicable Transmission station or Transmission substation:
>
> 3.3.1.1. Prior loss of communication and Protection Systems;
>
> 3.3.1.2. Application of a Fault or Faults; and
>
> 3.3.1.3. Delayed (remote) clearing times shall be used unless otherwise technically substantiated.
>
> **3.3.2** At each proximate existing BES Transmission station(s) and BES Transmission substation(s), as applicable:
>
> 3.3.2.1. Application of a Fault or Faults, either simultaneous with or following the Fault or Faults applied under Part 3.3.1.2; and
>
> 3.3.2.2. Normal clearing times shall be used unless otherwise technically substantiated.
>
> **3.3.3** A documented justification for the Fault(s) associated with physical attack to be simulated. A single justification may be used for multiple locations. The justification shall include at a minimum:

[50] *Id.*

3.3.3.1. The type of credible high-severity physical attack considered; and

3.3.3.2. The type of Fault(s) selected based upon the attack considered.

3.3.4 Removal of all Elements that Protection Systems and other controls are expected to automatically disconnect.

3.3.5 Actual or more conservative clearing times shall be used.

a) *Rationale for Requirement R3 Part 3.3.1*

Proposed Requirement R3 Part 3.3.1 requires that the risk assessment methodology include specifications for simulations at applicable Transmission stations and Transmission substations that include prior loss of communication and Protection Systems, application of a Fault or Faults, and that delayed (remote) clearing times shall be used unless an alternative approach is technically substantiated.

The SAR noted that many registered entities have found that the term "inoperable" in Reliability Standard CIP-014-3 includes the total loss of communication and protection equipment at the substation, necessitating delayed clearance from far-end relaying to isolate the event's impacts. The SAR further noted that the assumption of loss of local protection equipment is not consistently implemented. Proposed Requirement R3, Part 3.3.1 uses "prior loss" because when the drafting team was exploring possible attack scenarios, it determined that it is possible to develop scenarios that allow a Fault prior to the loss of communication and protection systems. Protection systems typically operate within a few cycles, so a short delay between the Fault and the loss of the protection system could allow breakers to operate.[51] Thus, the "Prior loss of communication and Protection Systems" language eliminates this possibility, so the Fault should be studied without the availability of local communications or Protection Systems. In addition, the

[51] Exhibit C Technical Rational at 4.

use of delayed clearing times is appropriate because the applicable substation has lost local protection and all communications with other substations.[52]

b) *Rationale for Requirement R3 Part 3.3.2*

Proposed Requirement R3 Part 3.3.2 requires the Transmission Owner's risk assessment methodology to simulate, at each applicable proximate existing BES Transmission station and BES Transmission substations, one or more Fault or Faults, either simultaneous with or following the Fault or Faults applied under Requirement R3 Part 3.3.1.2, using normal clearing times, unless otherwise technically substantiated. Every substation identified in Requirement R2 must be studied in at least one combination with its applicable Transmission station or Transmission substation.[53] For example, if there is a single neighboring substation near the applicable substation, then the applicable and neighboring substation should be studied together. If there are two or more neighboring substations that are close together and both are within 1,500 feet of the applicable substation, then the responsible entity may study the applicable substation with the combination of the two neighbors. If there are two or more neighboring substations on different sides of the applicable substation, then it may make sense to study the applicable substation with each proximity substation individually. For purposes of the simulations, the Faults should be applied at the same time or after the Faults applied to the applicable Transmission station or Transmission substation depending on the simulated event and any restrictions of the simulation software. The protection and communication systems at the proximate substations are expected to operate normally, so delayed clearing is not necessary.[54]

---

52 *Id.*
53 *Id.*
54 *Id.* at 5.

c) *Rationale for Requirement R3 Part 3.3.3*

Proposed Requirement R3 Part 3.3.3 requires the Transmission Owner to include in its risk assessment methodology a documented justification for the Fault(s) associated with physical attack to be simulated that includes the type of credible high-severity physical attack considered, and the type of Fault(s) selected based upon the attack considered. Requiring documented justification for Faults being selected, without specifying Fault type, allows Transmission Owners to determine on a location-by-location basis what is a credible high-severity scenario for a physical attack and how to appropriately model the associated stability simulations.[55] If a Fault type and justification is relevant to multiple Transmission stations or Transmission substations, a single justification may be used. This clarifies what study scenarios and assumptions are considered appropriate and reasonable.

d) *Rationale for Requirement R3 Part 3.3.4*

Proposed Requirement R3 Part 3.3.4 requires that the risk assessment methodology for simulations at applicable Transmission stations and Transmission substations include the removal of all Elements that Protection Systems and other controls are expected to automatically disconnect for the event. Ensuring the accurate simulation of Protection System actions is essential for correctly identifying the risk of instability, uncontrolled separation, or Cascading within an Interconnection.[56] After the prior loss of communication and Protection Systems at the applicable Transmission station or Transmission substation, other Protection Systems should operate as expected for the event considered.[57] This aims to clarify what study scenarios and assumptions are appropriate and reasonable.

---

55 *Id.*
56 *Id.*
57 *Id.*

e) *Rationale for Requirement R3 Part 3.3.5*

Proposed Requirement R3 Part 3.3.5 requires the use of actual or more conservative clearing times in the risk assessment methodology. This clarifies what study scenarios and assumptions (such as use of delayed clearing) are reasonable. In determining that actual or more conservative clearing times are appropriate the drafting team considered that, while there are commonly used generic clearing times for remote clearing that are consistent across the industry, actual clearing times can be shorter or longer depending on conditions and design considerations of an individual Transmission Owner. The drafting team noted that the difference of a few cycles can have a significant impact on the transient behavior of generating units; therefore, it determined that the risk analysis should use actual or more conservative clearing times.[58]

F. Proposed Requirement R4

Proposed Requirement R4 is a new requirement that promotes reliability by clarifying how to account for Transmission stations and Transmission substations with different ownership that are identified in Requirement R1 and that requires coordination between the owners to determine their individual and joint responsibilities under Requirements R3 and R5. The previous Requirement R4 language that was contained in Reliability Standard CIP-04-3, is largely preserved in Requirement R8, discussed *infra,* in proposed Reliability Standard CIP-014-4.

Proposed Requirement R4 provides:

> **R4.** Each Transmission Owner with applicable Transmission station(s) and Transmission substation(s) identified in Requirement R1 jointly owned by multiple Transmission Owners shall coordinate with each appropriate Transmission Owner(s) to determine and document their individual and joint responsibilities under Requirement R3 and Requirement R5.

[58] *Id.*

Accounting for joint ownership of Transmission substations and Transmission stations was discussed in the Guidelines and Technical Basis of previous versions of the CIP-014 standard; however, accounting for jointly owned facilities was not expressly included in the requirement language. Proposed Requirement R4 benefits reliability by clarifying how to account for Transmission stations and Transmission substations with different ownership by including jointly owned Transmission stations and Transmission substations within the requirement language. Specifically, proposed Requirement R4 requires Transmission Owners that have applicable jointly owned Transmission substations and Transmission stations, as identified under Requirement R1, to coordinate and document their individual and joint responsibilities for CIP-014-4 Requirements R3 and R5.[59]

G. Requirement R5

Proposed Requirement R5 is a predominantly new requirement that carries forward some previous Reliability Standard CIP-014-3 Requirement 1 Part 1.2 language that has been revised. Proposed Requirement R5 benefits reliability by aligning study periods, frequency of studies, and the powerflow models used for the studies. The previous Requirement R5 language that was contained in Reliability Standard CIP-04-3 is largely preserved in Requirement R9, discussed *infra,* in proposed Reliability Standard CIP-014-4.

Proposed Requirement R5 states:

> **R5.** At least once every 36 calendar months, each Transmission Owner shall perform a risk assessment to identify applicable Transmission station(s) and Transmission substation(s) identified in Requirement R1, that if rendered inoperable or damaged could result in instability, uncontrolled separation, or Cascading within an Interconnection, using the methodology established in Requirement R3. Jointly owned Transmission station(s) and Transmission substation(s) shall be assessed according to the responsibilities documented under Requirement R4. If proximate BES Transmission station(s) and BES Transmission substation(s) were identified in Requirement R2, they shall be included in the risk assessment according to Requirement R3, Part 3.3.

[59] *Id.*

5.1 If during a risk assessment, a Transmission station or Transmission substation is identified in either the dynamic or steady-state simulation as resulting in instability, uncontrolled separation, or Cascading within an Interconnection when rendered inoperable or damaged, then no further simulation is required.

5.2 If ~~At least once every 60 calendar months for a Transmission Owner that has not identified in its~~ a previous risk assessment ~~(as verified according to Requirement R2) any Transmission stations or Transmission substations that if rendered inoperable or damaged could result in~~ has identified a Transmission station or Transmission substation as causing instability, uncontrolled separation, or Cascading within an Interconnection when rendered inoperable or damaged, then the Transmission Owner may forgo additional assessments on that Transmission station or Transmission substation. Requirement R5, Part 5.3 and Requirement R7 through Requirement R10 still apply to that Transmission station or Transmission substation until a new risk assessment demonstrates otherwise.

5.3 ~~**1.2**~~ The Transmission Owner shall identify the primary control center that operationally controls each Transmission station or Transmission substation identified ~~in the Requirement R1 risk assessment~~ as resulting in instability, uncontrolled separation, or Cascading within an Interconnection when rendered inoperable or damaged in the Requirement R5 risk assessment.

Proposed Requirement R5 uses a 36-month periodicity for the Requirement R5 risk assessment to streamline periodicity throughout proposed Reliability Standard CIP-014-4, which was identified by the SAR as an area requiring revision from the multiple periodicity options included in the previous version of the standard.[60] Additionally, a single study periodicity is more easily aligned with project in-service date considerations and model choices. Under proposed Requirement R5, Transmission Owners shall review and, if necessary, update the list of applicable Transmission stations or Transmission substations under Attachment 1 at least once every 36 months. The list shall include existing or planned to be in service within 36 months Transmission stations and Transmission substations. The 36-month cycle for updating the list of applicable Transmission stations or Transmission substations per Attachment 1 aligns with the annual cycle

[60] *Id.*

for performing Planning Assessments, under NERC Reliability Standard TPL-001. In addition, the 36-month risk assessment study cycle aligns with the 36-month planned-to-be-in-service date.[61]

In addition to the performance of the risk assessment using Transmission stations and Transmission substations identified in Requirement R1, proposed Requirement R5 requires that any proximate Transmission stations and Transmission substations identified in Requirement R2 also be included in the risk assessment. Furthermore, any Transmission stations and Transmission substations assessed due to having been identified in Requirement R1 should also be run as part of a proximate Transmission stations and Transmission substations group under Requirement R2.[62]

1. Proposed Requirement R5 Part 5.1

Proposed Requirement R5 Part 1.1 states:

> **5.1** If during a risk assessment, a Transmission station or Transmission substation is identified in either the dynamic or steady-state simulation as resulting in instability, uncontrolled separation, or Cascading within an Interconnection when rendered inoperable or damaged, then no further simulation is required.

Proposed Requirement R5 Part 5.1 promotes efficiency. Specifically, if a Transmission Owner identifies a Transmission station or substation during a risk assessment that if rendered inoperable or damaged, could result in instability, uncontrolled separation, or Cascading within an Interconnection as a result of performing either a steady-state or dynamic analysis, then that Transmission Owner is not required to perform additional analysis to identify the same problem.[63]

2. Proposed Requirement R5 Part 5.2

Proposed Requirement R5 Part 5.2 states:

> **5.2** If a previous risk assessment has identified a Transmission station or Transmission substation as causing instability, uncontrolled separation, or Cascading within an Interconnection when rendered inoperable or damaged, then the Transmission

---

61 *Id.* at 6.
62 *Id.*
63 *See id.*

Owner may forgo additional assessments on that Transmission station or Transmission substation. Requirement R5, Part 5.3 and Requirement R7 through Requirement R10 still apply to that Transmission station or Transmission substation until a new risk assessment demonstrates otherwise.

Proposed Requirement R5 Part 5.2 promotes efficiency by providing that Transmission Owners are not required to reassess already identified and protected Transmission stations or substations (Requirement R5 Part 5.3 and Requirements R7 through R10 still apply to those Transmission stations or substations). If, however, a Transmission Owner seeks to determine whether a Transmission station or substation can be removed from identification and protection, outlined in Requirement R7 Part 7.1, then a new risk assessment is required under proposed Requirement R5 Part 5.2.[64]

3. Proposed Requirement R5 Part 5.3

Proposed Requirement R5 Part 5.3 states:

5.3. The Transmission Owner shall identify the primary control center that operationally controls each Transmission station or Transmission substation identified as resulting in instability, uncontrolled separation, or Cascading within an Interconnection when rendered inoperable or damaged in the Requirement R5 risk assessment.

Proposed Requirement R 5 Part 5.3 benefits reliability by requiring the identification of the Primary Control Center that operationally controls each Transmission station or Transmission substation identified in the Requirement R5 risk assessment. A primary control center "operationally controls" a Transmission station or Transmission substation when the control center's electronic actions can cause direct physical actions at the identified Transmission station and Transmission substation, such as opening a breaker.[65] These revisions support and align with the purpose of proposed Reliability Standard CIP-014-4, which is "to identify and protect Transmission stations and Transmission substations, and their associated primary control centers,

64 Exhibit C Technical Rationale at 6.

65 *Id.*

that if rendered inoperable or damaged due to a physical attack, could cause instability, uncontrolled separation, or Cascading within an Interconnection."

H. Requirements R6, R7, R8, R9 and R10

Proposed Requirements R6, R7, R8, R9, and R10 remain substantively unchanged from the currently approved standard. Specifically, the proposed revisions include renumbering these requirements, which were previously Requirements R2, R3, R4, R5, and R6. In addition, cross references to the requirements have been updated to reflect the new numbering, some minor stylistic changes were made, and several typographical errors have been corrected.

Specifically, proposed Requirement R6, previously Requirement R2 in Reliability Standard CIP-014-3, continues to require Transmission Owners to have an unaffiliated third party verify the proposed Requirement R5 risk assessment. Proposed Requirement R7, previously Requirement R3 in Reliability Standard CIP-014-3, continues to require primary control centers identified by the Transmission Owner under proposed Requirement R5 to notify the Transmission Operator that has operational control of the primary control center of the identification and the date of completion of proposed Requirement R6 within seven calendar days of the completion of proposed Requirement R6. Proposed Requirement R8, previously Requirement R4 in Reliability Standard CIP-014-3, continues to require Transmission Owners that identified a Transmission station, Transmission substation, or a primary control center in proposed Requirement R5 and verified according to proposed Requirement R6, and Transmission Operators notified by a Transmission Owner according to proposed Requirement R7, to conduct an evaluation of the potential threats and vulnerabilities of a physical attack to each of their respective Transmission stations, Transmission substations, and primary control centers.

Proposed Requirement R9, previously Requirement R5 in Reliability Standard CIP-014-3, continues to require Transmission Owners that identified a Transmission station, Transmission substation, or primary control center in proposed Requirement R5 and verified according to proposed Requirement R6, and Transmission Operators notified by a Transmission Owner according to proposed Requirement R7, to develop and implement a documented physical security plan that covers their respective Transmission stations, Transmission substations, and primary control centers. Proposed Requirement R10, previously Requirement R6 in Reliability Standard CIP-014-3, continues to require Transmission Owners that identified a Transmission station, Transmission substation, or primary control center in proposed Requirement R5 and verified according to proposed Requirement R6, and Transmission Operators notified by a Transmission Owner according to proposed Requirement R7, to have an unaffiliated third party review the evaluation performed under proposed Requirement R8 and the security plan developed under Requirement R9.

V. Enforceability

The proposed Reliability Standard includes measures that support each requirement by clearly identifying what is required and how NERC and the Regional Entities will enforce the requirement. These measures help ensure that the requirements will be enforced in a clear, consistent, and non-preferential manner and without prejudice to any party.[66] Additionally, the proposed Reliability Standard includes VRFs and VSLs. The VRFs and VSLs provide guidance on the way that NERC and the Regional Entities will enforce the requirements of the proposed Reliability Standard. The VRFs and VSLs for the proposed Reliability Standard comport with NERC and Commission guidelines related to their assignment. **Exhibit E** provides a detailed

[66] Order No. 672 at P 327.

review of the VRFs and VSLs, and the analysis of how the VRFs and VSLs were determined using these guidelines.

VI. EFFECTIVE DATE OF THE PROPOSED RELIABILITY STANDARDS

NERC respectfully requests that the Commission approve the proposed Reliability Standard to become effective as set forth in the implementation plan provided in **Exhibit B** hereto. The proposed implementation plan would have the proposed Reliability Standard become effective on the first day of the first calendar quarter that is 24 calendar months after the effective date of the Commission's order approving Reliability Standard CIP-014-4.

Under the proposed implementation plan, the initial risk assessment required by Reliability Standard CIP-014-4 Requirement R5, must be completed on or before the effective date of the standard. Subsequent risk assessments shall be performed no later than 36 calendar months following the effective date of Reliability Standard CIP-014-4. In addition, the proposed implementation plan provides that Reliability Standard CIP-014-3 shall be retired immediately prior to the effective date of Reliability Standard CIP-014-4.

In developing this implementation plan, the drafting team determined that a 24-month implementation timeframe would allow adequate time for Transmission Owners and Transmission Operators to determine applicability, develop criteria, write or revise methodologies, perform assessments, and procure unaffiliated third parties for risk assessment verification (which some Transmission Owners have performed concurrently with their risk assessment analyses). The drafting team further considered: (1) the severity of the concerns highlighted in the FERC December 2022 Order,[67] which directed NERC to evaluate the effectiveness of CIP-014-3 in mitigating the risks to the BPS associated with physical attacks; (2) the recommendations of the

[67] *N. Am. Elec. Reliability Corp*., 181 FERC ¶ 61,230 (2022).

CIP-014 Report;[68] and (3) the SAR requirement that the drafting team correct any discrepancies between the study period, frequency of study, and the base cases a Transmission Owner uses. In light of these considerations, the proposed implementation plan for Reliability Standard CIP-014-4 balances the urgency in the need to implement the standard against the time needed to comply.[69] NERC respectfully requests approval of the proposed Implementation Plan as submitted.

[68] *See Evaluation of the Physical Security Reliability Standard and Physical Security Attacks to the Bulk-Power System,* Docket No. RD23-2-000 (Apr. 14, 2023).

[69] *See* Order No. 672 at P 333 ("In considering whether a proposed Reliability Standard is just and reasonable, the Commission will consider also the timetable for implementation of the new requirements, including how the proposal balances any urgency in the need to implement it against the reasonableness of the time allowed for those who must comply to develop the necessary procedures, software, facilities, staffing or other relevant capability.").

VII. CONCLUSION

For the reasons set forth above, NERC respectfully requests that the Commission approve:

- proposed Reliability Standard CIP-014-4, and the associated elements, as shown in **Exhibit A**;
- the implementation plan included in **Exhibit B**; and
- the retirement of proposed Reliability Standard CIP-014-3.

Respectfully submitted,

/s/ Sarah P. Crawford

Lauren A. Perotti
Assistant General Counsel
Sarah P. Crawford
Senior Counsel
North American Electric Reliability Corporation
1401 H Street, N.W., Suite 410
Washington, D.C. 20005
(202) 400-3000
(202) 644-8099 – facsimile
lauren.perotti@nerc.net
sarah.crawford@nerc.net

Counsel for the North American Electric Reliability Corporation

July 16, 2026

Exhibit A

Exhibit A-1

Proposed Reliability Standard CIP-014-4

Clean

Standard Development Timeline

This section is maintained by the drafting team during the development of the standard and will be removed when the standard is adopted by the NERC Board of Trustees (Board).

Description of Current Draft

CIP-014-4 is posted for a 45-day formal comment period with additional ballot.

Completed Actions	Date
Standards Committee approved Standard Authorization Request for posting	June 21, 2023
Standard Authorization Request posted for comment	July 26 – August 24, 2023
Accepted Revised Standard Authorization Request	January 17, 2024
45-day formal or informal comment period with ballot	May 20 – July 3, 2024
45-day formal or informal comment period with additional ballot	September 23 – November 6, 2024
45-day formal comment period with additional ballot	June 6 – July 21, 2025
45-day formal comment period with additional ballot	March 31 – May 14, 2026

Anticipated Actions	Date
10-day final ballot	May 28 – June 8, 2026
Board adoption	June 17, 2026

New or Modified Term(s) Used in NERC Reliability Standards

This section includes all new or modified terms used in the proposed standard that will be included in the *Glossary of Terms Used in NERC Reliability Standards* upon applicable regulatory approval. Terms used in the proposed standard that are already defined and are not being modified can be found in the *Glossary of Terms Used in NERC Reliability Standards*. The new or revised terms listed below will be presented for approval along with the proposed standard. Upon Board adoption, this section will be removed.

Term(s):

None.

A. Introduction

1. **Title:** Physical Security

2. **Number:** CIP-014-4

3. **Purpose:** To identify and protect Transmission stations and Transmission substations, and their associated primary control centers, that if rendered inoperable or damaged due to a physical attack, could result in instability, uncontrolled separation, or Cascading within an Interconnection.

4. **Applicability:**

   4.1. Functional Entities:

   4.1.1. Transmission Owner that owns or jointly owns one or more Transmission stations or Transmission substations that meet the applicability criteria of Attachment 1.

   4.1.2. Transmission Operator

   Exemption: Facilities in a "protected area," as defined in 10 C.F.R. § 73.2, within the scope of a security plan approved or accepted by the Nuclear Regulatory Commission are not subject to this Standard; or Facilities within the scope of a security plan approved or accepted by the Canadian Nuclear Safety Commission are not subject to this Reliability Standard.

5. **Effective Date:** See Implementation Plan for CIP-014-4.

B. Requirements and Measures

R1. Each Transmission Owner shall, at least once every 36 calendar months, identify each applicable Transmission station and Transmission substation meeting any of the criteria in Attachment 1 that is either existing or planned to be in service within 36 calendar months. *[Violation Risk Factor: High; Time-Horizon: Long-term Planning]*

M1. Examples of evidence may include, but are not limited to, dated written or electronic documentation of the Transmission station(s) and Transmission substation(s) (existing and those planned to be in service within 36 calendar months) that meet any of the criteria in Attachment 1.

R2. Each Transmission Owner with applicable Transmission station(s) or Transmission substation(s) identified in Requirement R1 shall identify proximate existing Bulk Electric System (BES) Transmission station(s) and BES Transmission substation(s), irrespective of ownership, within 1500 feet or 457 meters (the shortest distance, measured substation fence line to substation fence line) of an applicable Transmission station or Transmission substation identified in Requirement R1. *[Violation Risk Factor: Medium; Time-Horizon: Long-term Planning]*

M2. Examples of evidence may include, but are not limited to, dated written or electronic documentation of the BES Transmission stations or BES Transmission substations identified in Requirement R2.

R3. Each Transmission Owner shall have a documented risk assessment methodology for evaluating the loss of each applicable Transmission station or Transmission substation identified in Requirement R1. The methodology shall include, at a minimum, the following: *[Violation Risk Factor: High; Time-Horizon: Long-term Planning]*

3.1. Documented criteria for assessing instability, uncontrolled separation, or Cascading within an Interconnection. The criteria shall include, at a minimum, technically justified thresholds identifying unacceptable generation and load loss within an Interconnection.

3.2. A provision that steady-state and dynamic simulations shall each be performed using at a minimum one System peak Load case and one System Off-Peak Load case.

3.3. Specifications for simulations at each applicable Transmission station or Transmission substation identified in accordance with Requirement R1 and, if applicable, at each associated proximate existing BES Transmission station(s) and BES Transmission substation(s) identified in accordance with Requirement R2, that include:

3.3.1. At the applicable Transmission station or Transmission substation:

3.3.1.1. Prior loss of communication and Protection Systems;

3.3.1.2. Application of a Fault or Faults; and

3.3.1.3. Delayed (remote) clearing times shall be used unless otherwise technically substantiated.

3.3.2. At each proximate existing BES station(s) and BES substation(s), as applicable:

3.3.2.1. Application of a Fault or Faults, either simultaneous with or following the Fault or Faults applied under Part 3.3.1.2; and

3.3.2.2. Normal clearing times shall be used unless otherwise technically substantiated.

3.3.3. A documented justification for the Fault(s) associated with physical attack to be simulated. A single justification may be used for multiple locations. The justification shall include at a minimum:

3.3.3.1. The type of credible high-severity physical attack considered; and

3.3.3.2. The type of Fault(s) selected based upon the attack considered.

3.3.4. Removal of all Elements that Protection Systems and other controls are expected to automatically disconnect.

3.3.5. Actual or more conservative clearing times shall be used.

M3. Each Transmission Owner shall provide dated evidence, such as electronic or hard copies, of a risk assessment methodology satisfying Requirement R3.

R4. Each Transmission Owner with applicable Transmission station(s) and Transmission substation(s) identified in Requirement R1 jointly owned by multiple Transmission Owners shall coordinate with each appropriate Transmission Owner(s) to determine and document their individual and joint responsibilities under Requirement R3 and Requirement R5. *[Violation Risk Factor: Medium; Time-Horizon: Operations Planning, Long-term Planning]*

M4. Examples of acceptable evidence may include, but are not limited to, dated documentation, such as meeting minutes, agreements, and email correspondence, that identifies that agreement has been reached on individual and joint responsibilities for performing the required risk assessments.

R5. At least once every 36 calendar months, each Transmission Owner shall perform a risk assessment to identify applicable Transmission station(s) and Transmission substation(s) identified in Requirement R1, that if rendered inoperable or damaged could result in instability, uncontrolled separation, or Cascading within an Interconnection, using the methodology established in Requirement R3. Jointly owned Transmission station(s) and Transmission substation(s) shall be assessed according to the responsibilities documented under Requirement R4. If proximate BES station(s) and BES Transmission substation(s) were identified in Requirement R2, they shall be included in the risk assessment according to Requirement R3, Part 3.3. *[Violation Risk Factor: High; Time-Horizon: Operations Planning, Long-term Planning]*

5.1. If during a risk assessment, a Transmission station or Transmission substation is identified in either the dynamic or steady-state simulation as resulting in instability, uncontrolled separation, or Cascading within an Interconnection when rendered inoperable or damaged, then no further simulation is required.

5.2. If a previous risk assessment has identified a Transmission station or Transmission substation as causing instability, uncontrolled separation, or Cascading within an Interconnection when rendered inoperable or damaged, then the Transmission Owner may forgo additional assessments on that Transmission station or Transmission substation. Requirement R5, Part 5.3 and Requirement R7 through Requirement R10 still apply to that Transmission station or Transmission substation until a new risk assessment demonstrates otherwise.

5.3. The Transmission Owner shall identify the primary control center that operationally controls each Transmission station or Transmission substation identified as resulting in instability, uncontrolled separation, or Cascading within an Interconnection when rendered inoperable or damaged in the Requirement R5 risk assessment.

M5. Examples of acceptable evidence may include, but are not limited to, dated written or electronic documentation of the risk assessment satisfying Requirement R5 including the identified Transmission station(s) or Transmission substation(s). For Requirement R5, Part 5.3, examples of acceptable evidence may include, but are not limited to, dated written or electronic documentation of the identification of the primary control center that operationally controls each identified Transmission station or Transmission substation.

R6. Each Transmission Owner shall have an unaffiliated third party verify the risk assessment performed under Requirement R5. The verification may occur concurrently with or after the risk assessment performed under Requirement R5. *[Violation Risk Factor: Medium; Time-Horizon: Long-term Planning]*

6.1. Each Transmission Owner shall select an unaffiliated verifying entity that is either:

- A registered Planning Coordinator, Transmission Planner, or Reliability Coordinator; or
- An entity that has transmission planning or analysis experience.

6.2. The unaffiliated third-party verification shall verify the Transmission Owner's risk assessment performed under Requirement R5, which may include recommendations for the addition or deletion of a Transmission station(s) or Transmission substation(s). The Transmission Owner shall ensure the verification is completed within 90 calendar days following the completion of the Requirement R5 risk assessment.

6.3. If the unaffiliated verifying entity recommends that the Transmission Owner add a Transmission station(s) or Transmission substation(s) to, or remove a Transmission station or Transmission substation from, its identification under Requirement R5, the Transmission Owner shall either, within 60 calendar days of completion of the verification, for each recommended addition or removal of a Transmission station or Transmission substation:

- Modify its identification under Requirement R5 consistent with the recommendation; or
- Document the technical basis for not modifying the identification in accordance with the recommendation.

6.4. Each Transmission Owner shall implement procedures, such as the use of non-disclosure agreements, for protecting sensitive or confidential information made available to the unaffiliated third-party verifier and to protect or exempt sensitive or confidential information developed pursuant to this Reliability Standard from public disclosure.

M6. Examples of acceptable evidence may include, but are not limited to, dated written or electronic documentation that the Transmission Owner completed an unaffiliated third party verification of the Requirement R5 risk assessment and satisfied all of the applicable provisions of Requirement R6, including, if applicable, documenting the technical basis for not modifying the identification in Requirements R1, R2, R3, R4, and R5 as specified under Part 6.3. Additionally, examples of evidence may include, but are not limited to, written or electronic documentation of procedures to protect information under Part 6.4.

R7. For a primary control center(s) identified by the Transmission Owner according to Requirement R5, Part 5.3 that a) operationally controls an identified Transmission station or Transmission substation verified according to Requirement R6, and b) is not under the operational control of the Transmission Owner: the Transmission Owner shall, within seven calendar days following completion of Requirement R6, notify the Transmission Operator that has operational control of the primary control center of such identification and the date of completion of Requirement R6. *[Violation Risk Factor: Lower; Time-Horizon: Long-term Planning]*

7.1. If a Transmission station or Transmission substation previously identified under Requirements R1 and R5 and verified according to Requirement R6 is removed from the identification during a subsequent risk assessment performed according to Requirement R5 or a verification according to Requirement R6, then the Transmission Owner shall, within seven calendar days following the verification or the subsequent risk assessment, notify the Transmission Operator that has operational control of the primary control center of the removal.

M7. Examples of acceptable evidence may include, but are not limited to, written or electronic notifications or communications that the Transmission Owner notified each Transmission Operator, as applicable, according to Requirement R7.

R8. Each Transmission Owner that identified a Transmission station, Transmission substation, or a primary control center in Requirement R5 and verified according to Requirement R6, and each Transmission Operator notified by a Transmission Owner according to Requirement R7, shall conduct an evaluation of the potential threats and vulnerabilities of a physical attack to each of their respective Transmission station(s), Transmission substation(s), and primary control center(s) identified in Requirement R5 and verified according to Requirement R6. The evaluation shall consider the following: *[Violation Risk Factor: Medium; Time-Horizon: Operations Planning, Long-term Planning]*

8.1. Unique characteristics of the identified and verified Transmission station(s), Transmission substation(s), and primary control center(s);

8.2. Prior history of attack(s) on similar facilities taking into account the frequency, geographic proximity, and severity of past physical security related events; and

8.3. Intelligence or threat warnings received from sources such as law enforcement, the Electric Reliability Organization (ERO), the Electricity Sector Information Sharing and Analysis Center (E-ISAC), U.S. federal and/or Canadian governmental agencies, or their successors.

M8. Examples of evidence may include, but are not limited to, dated written or electronic documentation that the Transmission Owner or Transmission Operator conducted an evaluation of the potential threats and vulnerabilities of a physical attack to their respective Transmission station(s), Transmission substation(s), and primary control center(s) as specified in Requirement R8.

R9. Each Transmission Owner that identified a Transmission station, Transmission substation, or primary control center in Requirement R5 and verified according to Requirement R6, and each Transmission Operator notified by a Transmission Owner according to Requirement R7, shall develop and implement a documented physical security plan(s) that covers their respective Transmission station(s), Transmission substation(s), and primary control center(s). The physical security plan(s) shall be developed within 120 calendar days following the completion of Requirement R6 and executed according to the timeline specified in the physical security plan(s). The physical security plan(s) shall include the following attributes: [*Violation Risk Factor*: *High; Time-Horizon: Long-term Planning*]

9.1. Resiliency or security measures designed collectively to deter, detect, delay, assess, communicate, and respond to potential physical threats and vulnerabilities identified during the evaluation conducted in Requirement R8.

9.2. Law enforcement contact and coordination information.

9.3. A timeline for executing the physical security enhancements and modifications specified in the physical security plan.

9.4. Provisions to evaluate evolving physical threats, and their corresponding security measures, to the Transmission station(s), Transmission substation(s), or primary control center(s).

M9. Examples of evidence may include, but are not limited to, dated written or electronic documentation of its physical security plan(s) that covers their respective identified and verified Transmission station(s), Transmission substation(s), and primary control center(s) as specified in Requirement R6, and additional evidence demonstrating execution of the physical security plan according to the timeline specified in the physical security plan.

R10. Each Transmission Owner that identified a Transmission station, Transmission substation, or primary control center in Requirement R5 and verified according to Requirement R6, and each Transmission Operator notified by a Transmission Owner according to Requirement R7, shall have an unaffiliated third party review the evaluation performed under Requirement R8 and the security plan(s) developed under Requirement R9. The review may occur concurrently with or after completion of the evaluation performed under Requirement R8 and the security plan development under Requirement R9. *[Violation Risk Factor: Medium; Time-Horizon: Long-term Planning]*

10.1. Each Transmission Owner and Transmission Operator shall select an unaffiliated third-party reviewer from the following:

- An entity or organization with electric industry physical security experience and whose review staff has at least one member who holds either a Certified Protection Professional (CPP) or Physical Security Professional (PSP) certification;
- An entity or organization approved by the ERO;
- A governmental agency with physical security expertise; or
- An entity or organization with demonstrated law enforcement, government, or military physical security expertise.

10.2. The Transmission Owner or Transmission Operator, respectively, shall ensure that the unaffiliated third-party review is completed within 90 calendar days of completing the security plan(s) developed in Requirement R9. The unaffiliated third-party review may, but is not required to, include recommended changes to the evaluation performed under Requirement R8 or the security plan(s) developed under Requirement R9.

10.3. If the unaffiliated third-party reviewer recommends changes to the evaluation performed under Requirement R8 or security plan(s) developed under Requirement R9, the Transmission Owner or Transmission Operator shall, within

60 calendar days of the completion of the unaffiliated third party review, for each recommendation:

- Modify its evaluation or security plan(s) consistent with the recommendation; or
- Document the reason(s) for not modifying the evaluation or security plan(s) consistent with the recommendation.

10.4. Each Transmission Owner and Transmission Operator shall implement procedures, such as the use of non-disclosure agreements, for protecting sensitive or confidential information made available to the unaffiliated third-party reviewer and to protect or exempt sensitive or confidential information developed pursuant to this Reliability Standard from public disclosure.

M10. Examples of evidence may include, but are not limited to, written or electronic documentation that the Transmission Owner or Transmission Operator had an unaffiliated third party review the evaluation performed under Requirement R8 and the security plan(s) developed under Requirement R9 as specified in Requirement R10 including, if applicable, documenting the reasons for not modifying the evaluation or security plan(s) in accordance with a recommendation under Part 10.3. Additionally, examples of evidence may include, but are not limited to, written or electronic documentation of procedures to protect information under Part 10.4.

C. Compliance

1. Compliance Monitoring Process

1.1. Compliance Enforcement Authority: "Compliance Enforcement Authority" means NERC or the Regional Entity in their respective roles of monitoring and enforcing compliance with the NERC Reliability Standards.

1.2. Evidence Retention: The following evidence retention period(s) identify the period of time an entity is required to retain specific evidence to demonstrate compliance. For instances where the evidence retention period specified below is shorter than the time since the last audit, the Compliance Enforcement Authority may ask an entity to provide other evidence to show that it was compliant for the full-time period since the last audit.

The Transmission Owner and Transmission Operator shall keep data or evidence to show compliance, as identified below, unless directed by its Compliance Enforcement Authority to retain specific evidence for a longer period of time as part of an investigation:

The responsible entities shall retain evidence, as per Requirements R1 through R10, for three years.

If a Responsible Entity is found non-compliant, it shall keep information related to the non-compliance until mitigation is complete and approved, or for the time specified above, whichever is longer.

The CEA shall keep the last audit records and all requested and submitted subsequent audit records.

1.3. Compliance Monitoring and Enforcement Program: "Compliance Monitoring Enforcement Program" or "CMEP" means, depending on the context (1) the NERC Compliance Monitoring and Enforcement Program (Appendix 4C to the NERC Rules of Procedure) or the Commission-approved program of a Regional Entity, as applicable, or (2) the program, department or organization within NERC or a Regional Entity that is responsible for performing compliance monitoring and enforcement activities with respect to Registered Entities' compliance with Reliability Standards.

Violation Severity Levels

	Violation Severity Levels			
	Lower VSL	**Moderate VSL**	**High VSL**	**Severe VSL**
R1.	The Transmission Owner identified each applicable Transmission station(s) and Transmission substation(s) per Attachment 1, but did so after 36 calendar months, but less than or equal to 38 calendar months. OR The Transmission Owner identified each applicable Transmission station(s) and Transmission substation(s), but failed to identify less than or equal to 10% of the applicable Transmission station(s) and Transmission substation(s) per Attachment 1.	The Transmission Owner identified each applicable Transmission station(s) and Transmission substation(s) per Attachment 1, but did so after 38 calendar months, but less than or equal to 40 calendar months. OR The Transmission Owner identified each applicable Transmission station(s) and Transmission substation(s), but failed to identify more than 10% and less than or equal to 20% of the applicable Transmission station(s) and Transmission substation(s) per Attachment 1.	The Transmission Owner identified each applicable Transmission station(s) and Transmission substation(s) per Attachment 1, but did so after 40 calendar months, but less than or equal to 42 calendar months. OR The Transmission Owner identified each applicable Transmission station(s) and Transmission substation(s), but failed to identify more than 20% and less than or equal to 30% of the applicable Transmission station(s) and Transmission substation(s) per Attachment 1.	The Transmission Owner failed to identify each applicable Transmission station(s) and Transmission substation(s) per Attachment 1. OR The Transmission Owner identified each applicable Transmission station(s) and Transmission substation(s) per Attachment 1, but did so after more than 42 calendar months. OR The Transmission Owner identified each applicable Transmission station(s) and Transmission substation(s), but failed to identify more than 30% of the applicable Transmission station(s) and Transmission substation(s) per Attachment 1.

	Violation Severity Levels			
	Lower VSL	Moderate VSL	High VSL	Severe VSL
R2.	N/A	N/A	N/A	The Transmission Owner with applicable Transmission station(s) or Transmission substation(s) identified in Requirement R1 did not identify existing BES Transmission station(s) and BES Transmission substation(s), irrespective of ownership, within 1500 feet or 457 meters (the shortest distance, measured substation fence line to substation fence line) of an applicable Transmission station or Transmission substation identified in Requirement R1.
R3.	N/A	The Transmission Owner has a risk assessment methodology that failed to include one of the requirements listed in Parts 3.1 through 3.3.	The Transmission Owner has a risk assessment methodology that failed to include two of the requirements listed in Parts 3.1 through 3.3.	The Transmission Owner has a risk assessment methodology that failed to include all three of the requirements listed in Parts 3.1 through 3.3. OR The Transmission Owner does not have a risk assessment methodology.

	Violation Severity Levels			
	Lower VSL	Moderate VSL	High VSL	Severe VSL
R4.	The Transmission Owner with applicable Transmission station(s) and Transmission substation(s) identified in Requirement R1 owned by multiple Transmission Owners failed to coordinate with each appropriate Transmission Owner(s) to determine and document their individual and joint responsibilities for documenting a risk assessment methodology under Requirement R3 and for performing any required risk assessments per Requirement R5 for less than or equal to 25% of jointly owned applicable Transmission station(s) and Transmission substation(s).	The Transmission Owner with applicable Transmission station(s) and Transmission substation(s) identified in Requirement R1 owned by multiple Transmission Owners failed to coordinate with each appropriate Transmission Owner(s) to determine and document their individual and joint responsibilities for documenting a risk assessment methodology under Requirement R3 and for performing any required risk assessments per Requirement R5 for more than 25% and less than or equal to 50% of jointly owned applicable Transmission station(s) and Transmission substation(s).	The Transmission Owner with applicable Transmission station(s) and Transmission substation(s) identified in Requirement owned by multiple Transmission Owners failed to coordinate with each appropriate Transmission Owner(s) to determine and document their individual and joint responsibilities for documenting a risk assessment methodology under Requirement R3 and for performing any required risk assessments per Requirement R5 for more than 50% and less than or equal to 75% of jointly owned applicable Transmission station(s) and Transmission substation(s).	The Transmission Owner with applicable Transmission station(s) and Transmission substation(s) identified in Requirement R1 owned by multiple Transmission Owners failed to coordinate with each appropriate Transmission Owner(s) to determine and document their individual and joint responsibilities for documenting a risk assessment methodology under Requirement R3 and for performing any required risk assessments per Requirement R5 for more than 75% and less than or equal to 100% of any evidence for jointly owned applicable Transmission station(s) and Transmission substation(s).
R5.	The Transmission Owner performed a risk assessment, but did so after 36 calendar months, but less than or equal to 38 calendar months.	The Transmission Owner performed a risk assessment, but did so after 38 calendar months, but less than or equal to 40 calendar months. OR	The Transmission Owner performed a risk assessment, but did so after 40 calendar months, but less than or equal to 42 calendar months. OR	The Transmission Owner performed a risk assessment, but did so after more than 42 calendar months. OR

	Violation Severity Levels			
	Lower VSL	Moderate VSL	High VSL	Severe VSL
		The Transmission Owner performed a risk assessment inconsistent with one of the methodology requirements listed in Requirement R3, Parts 3.1 through 3.3.	The Transmission Owner performed a risk assessment inconsistent with two of the methodology requirements listed in Requirement R3, Parts 3.1 through 3.3. OR The Transmission Owner performed a risk assessment, but failed to include the primary control center identified in Part 5.2.	The Transmission Owner performed a risk assessment inconsistent with all three of the methodology requirements listed in Requirement R3, Parts 3.1 through 3.3.
R6.	The Transmission Owner had an unaffiliated third party verify the risk assessment performed under Requirement R5, but did so in more than 90 calendar days, but less than or equal to 100 calendar days following completion of Requirement R5. OR The Transmission Owner had an unaffiliated third party verify the risk assessment performed under Requirement R5 and modified or documented the technical basis	The Transmission Owner had an unaffiliated third party verify the risk assessment performed under Requirement R5, but did so more than 100 calendar days, but less than or equal to 110 calendar days following completion of Requirement R5. OR The Transmission Owner had an unaffiliated third party verify the risk assessment performed under Requirement R5 and modified or documented the technical basis for not modifying its identification	The Transmission Owner had an unaffiliated third party verify the risk assessment performed under Requirement R5, but did so more than 110 calendar days, but less than or equal to 120 calendar days following completion of Requirement R5. OR The Transmission Owner had an unaffiliated third party verify the risk assessment performed under Requirement R5 and modified or documented the technical basis	The Transmission Owner had an unaffiliated third party verify the risk assessment performed under Requirement R5, but did so more than 120 calendar days following completion of Requirement R5. OR The Transmission Owner failed to have an unaffiliated third party verify the risk assessment performed under Requirement R5. OR

	Violation Severity Levels			
	Lower VSL	Moderate VSL	High VSL	Severe VSL
	for not modifying its identification under Requirement R5 as required by Part6.3, but did so more than 60 calendar days and less than or equal to 70 calendar days from completion of the third party verification.	under Requirement R5 as required by Part 6.3, but did so more than 70 calendar days and less than or equal to 80 calendar days from completion of the third party verification.	for not modifying its identification under Requirement R5 as required by Part 6.3, but did so more than 80 calendar days from completion of the third party verification. OR The Transmission Owner had an unaffiliated third party verify the risk assessment performed under Requirement R5, but failed to modify or document the technical basis for not modifying its identification under R4 as required by Part 6.3.	The Transmission Owner had an unaffiliated third party verify the risk assessment performed under Requirement R5, but failed to implement procedures for protecting information per Part 6.4.
R7.	The Transmission Owner notified the Transmission Operator that operates the primary control center as specified in Requirement R7, but did so more than seven calendar days and less than or equal to nine calendar days following the completion of Requirement R6. OR	The Transmission Owner notified the Transmission Operator that operates the primary control center as specified in Requirement R7, but did so more than nine calendar days and less than or equal to 11 calendar days following the completion of Requirement R6. OR	The Transmission Owner notified the Transmission Operator that operates the primary control center as specified in Requirement R7, but did so more than 11 calendar days and less than or equal to 13 calendar days following the completion of Requirement R6. OR	The Transmission Owner notified the Transmission Operator that operates the primary control center as specified in Requirement R7, but did so more than 13 calendar days following the completion of Requirement R6. OR The Transmission Owner failed to notify the Transmission

	Violation Severity Levels			
	Lower VSL	Moderate VSL	High VSL	Severe VSL
	The Transmission Owner notified the Transmission Operator that operates the primary control center of the removal from the identification in Requirement R5, but did so more than seven calendar days and less than or equal to nine calendar days following the verification or the subsequent risk assessment.	The Transmission Owner notified the Transmission Operator that operates the primary control center of the removal from the identification in Requirement R5, but did so more than nine calendar days and less than or equal to 11 calendar days following the verification or the subsequent risk assessment.	The Transmission Owner notified the Transmission Operator that operates the primary control center of the removal from the identification in Requirement R5, but did so more than 11 calendar days and less than or equal to 13 calendar days following the verification or the subsequent risk assessment.	Operator that it operates a control center identified in Requirement R5. OR The Transmission Owner notified the Transmission Operator that operates the primary control center of the removal from the identification in Requirement R5, but did so more than 13 calendar days following the verification or the subsequent risk assessment. OR The Transmission Owner failed to notify the Transmission Operator that operates the primary control center of the removal from the identification in Requirement R5.

	Violation Severity Levels			
	Lower VSL	Moderate VSL	High VSL	Severe VSL
R8.	N/A	The responsible entity conducted an evaluation of the potential physical threats and vulnerabilities to each of its Transmission station(s), Transmission substation(s), and primary control center(s) identified in Requirement R5, but failed to consider one of Parts 8.1 through 8.3 in the evaluation.	The responsible entity conducted an evaluation of the potential physical threats and vulnerabilities to each of its Transmission station(s), Transmission substation(s), and primary control center(s) identified in Requirement R5, but failed to consider two of Parts 8.1 through 8.3 in the evaluation.	The responsible entity failed to conduct an evaluation of the potential physical threats and vulnerabilities to each of its Transmission station(s), Transmission substation(s), and primary control center(s) identified in Requirement R5. OR The responsible entity conducted an evaluation of the potential physical threats and vulnerabilities to each of its Transmission station(s), Transmission substation(s), and primary control center(s) identified in Requirement R5, but failed to consider Parts 8.1 through 8.3.

	Violation Severity Levels			
	Lower VSL	Moderate VSL	High VSL	Severe VSL
R9.	The responsible entity developed and implemented a documented physical security plan(s) that covers each of its Transmission station(s), Transmission substation(s), and primary control center(s) identified in Requirement R5, but did so more than 120 calendar days, but less than or equal to 130 calendar days after completing Requirement R6. OR The responsible entity developed and implemented a documented physical security plan(s) that covers its Transmission station(s), Transmission substation(s), and primary control center(s) identified in Requirement R5 and verified according to Requirement R6, but failed to include one of Parts 9.1 through 9.4 in the plan.	The responsible entity developed and implemented a documented physical security plan(s) that covers each of its Transmission station(s), Transmission substation(s), and primary control center(s) identified in Requirement R5, but did so more than 130 calendar days, but less than or equal to 140 calendar days after completing Requirement R6. OR The responsible entity developed and implemented a documented physical security plan(s) that covers its Transmission station(s), Transmission substation(s), and primary control center(s) identified in Requirement R5 and verified according to Requirement R6, but failed to include two of Parts 9.1 through 9.4 in the plan.	The responsible entity developed and implemented a documented physical security plan(s) that covers each of its Transmission station(s), Transmission substation(s), and primary control center(s) identified in Requirement R5, but did so more than 140 calendar days, but less than or equal to 150 calendar days after completing Requirement R6. OR The responsible entity developed and implemented a documented physical security plan(s) that covers its Transmission station(s), Transmission substation(s), and primary control center(s) identified in Requirement R5 and verified according to Requirement R6, but failed to include three of Parts 9.1 through 9.4 in the plan.	The responsible entity developed and implemented a documented physical security plan(s) that covers each of its Transmission station(s), Transmission substation(s), and primary control center(s) identified in Requirement R5, but did so more than 150 calendar days after completing the verification in Requirement R6. OR The responsible entity failed to develop and implement a documented physical security plan(s) that covers its Transmission station(s), Transmission substation(s), and primary control center(s) identified in Requirement R5 and verified according to Requirement R6. OR The responsible entity developed and implemented a documented physical security plan(s) that covers its

	Violation Severity Levels			
	Lower VSL	Moderate VSL	High VSL	Severe VSL
				Transmission station(s), Transmission substation(s), and primary control center(s) identified in Requirement R5 and verified according to Requirement R6, but failed to include Parts 9.1 through 9.4 in the plan.
R10.	The responsible entity had an unaffiliated third party review the evaluation performed under Requirement R8 and the security plan(s) developed under Requirement R9, but did so in more than 90 calendar days, but less than or equal to 100 calendar days. OR The responsible entity had an unaffiliated third party review the evaluation performed under Requirement R8 and the security plan(s) developed under Requirement R9 and modified or documented the reason for not modifying the security plan(s) as specified in Part 10.3, but did so more than 70 calendar days and less than	The responsible entity had an unaffiliated third party review the evaluation performed under Requirement R8 and the security plan(s) developed under Requirement R9, but did so in more than 100 calendar days, but less than or equal to 110 calendar days. OR The responsible entity had an unaffiliated third party review the evaluation performed under Requirement R8 and the security plan(s) developed under Requirement R9 and modified or documented the reason for not modifying the security plan(s) as specified in Part 10.3, but did so more than 80 calendar days following	The responsible entity had an unaffiliated third party review the evaluation performed under Requirement R8 and the security plan(s) developed under Requirement R9, but did so more than 110 calendar days, but less than or equal to 120 calendar days. OR The responsible entity failed to have an unaffiliated third party review the evaluation performed under Requirement R8 and the security plan(s) developed under Requirement R9. OR The responsible entity had an unaffiliated third party review	The responsible entity failed to have an unaffiliated third party review the evaluation performed under Requirement R8 and the security plan(s) developed under Requirement R9 in more than 120 calendar days.

	Violation Severity Levels			
	Lower VSL	Moderate VSL	High VSL	Severe VSL
	or equal to 80 calendar days following completion of the third party review.	completion of the third party review. OR The responsible entity had an unaffiliated third party review the evaluation performed under Requirement R8 and the security plan(s) developed under Requirement R9, but did not document the reason for not modifying the security plan(s) as specified in Part 10.3.	the evaluation performed under Requirement R8 and the security plan(s) developed under Requirement R9, but failed to implement procedures for protecting information per Part 10.4.	

D. Regional Variances

None.

E. Interpretations

None.

F. Associated Documents

CIP-014-4 Implementation Plan

CIP-014-4 Technical Rationale Document

Version History

Version	Date	Action	Change Tracking
1	October 1, 2015	Effective Date	New
2	April 16, 2015	Revised to meet FERC Order 802 directive to remove “widespread”.	Revision
2	May 7, 2015	Adopted by the NERC Board of Trustees	
2	July 14, 2015	FERC Letter Order in Docket No. RD15-4-000 approving CIP-014-2	
3	January 19, 2022	Revised to remove Compliance Section 1.4	Revision
3	June 16, 2022	FERC Letter Order in Docket No. RD22-3-000 approving Modifications to CIP-014-3	Revision
3	June 16,2022	Effective Date	Revision
4	TBD	Revisions made by the Project 2023-06 drafting team	Revision

Attachment 1 – Applicability Criteria

Applicable Transmission station(s) or Transmission substation(s) are those that meet any of the following criteria:

1. Transmission Facilities operated at 500 kV or higher. For the purpose of this criterion, the collector bus for a generation plant is not considered a Transmission Facility, but is part of the generation interconnection Facility.

2. Transmission Facilities that are operating between 200 kV and 499 kV at a single station or substation, where the station or substation is connected at 200 kV or higher voltages to three or more other Transmission stations or substations and has an "aggregate weighted value" exceeding 3,000 according to the table below. The "aggregate weighted value" for a single station or substation is determined by summing the "weight value per line" shown in the table below for each incoming and each outgoing BES Transmission Line that is connected to another Transmission station or substation. For the purpose of this criterion, the collector bus for a generation plant is not considered a Transmission Facility, but is part of the generation interconnection Facility.

Voltage Value of a Line	Weight Value per Line
less than 200 kV (not applicable)	(not applicable)
200 kV to 299 kV	700
300 kV to 499 kV	1,300
500 kV and above	N/A

3. Transmission Facilities at a single station or substation location that are identified by their Reliability Coordinator, Planning Coordinator, or Transmission Planner as critical to the derivation of Interconnection Reliability Operating Limits (IROLs) and their associated contingencies.

4. Transmission Facilities identified as essential to meeting Nuclear Plant Interface Requirements (NPIRs).

Exhibit A-2

Proposed Reliability Standard CIP-014-4

Redline

Standard Development Timeline

This section is maintained by the drafting team during the development of the standard and will be removed when the standard is adopted by the NERC Board of Trustees (Board).

Description of Current Draft

CIP-014-4 is posted for a 45-day formal comment period with additional ballot.

Completed Actions	Date
Standards Committee approved Standard Authorization Request for posting	June 21, 2023
Standard Authorization Request posted for comment	July 26 – August 24, 2023
Accepted Revised Standard Authorization Request	January 17, 2024
45-day formal or informal comment period with ballot	May 20 – July 3, 2024
45-day formal or informal comment period with additional ballot	September 23 – November 6, 2024
45-day formal comment period with additional ballot	June 6 – July 21, 2025
45-day formal comment period with additional ballot	March 31 – May 14, 2026

Anticipated Actions	Date
10-day final ballot	May 28 – June 8, 2026
Board adoption	June 17, 2026

New or Modified Term(s) Used in NERC Reliability Standards

This section includes all new or modified terms used in the proposed standard that will be included in the *Glossary of Terms Used in NERC Reliability Standards* upon applicable regulatory approval. Terms used in the proposed standard that are already defined and are not being modified can be found in the *Glossary of Terms Used in NERC Reliability Standards*. The new or revised terms listed below will be presented for approval along with the proposed standard. Upon Board adoption, this section will be removed.

Term(s):

None.

A. Introduction

1. **Title:** Physical Security

2. **Number:** CIP-~~014-3~~014-4

3. **Purpose:** To identify and protect Transmission stations and Transmission substations, and their associated primary control centers, that if rendered inoperable or damaged ~~as a result of~~due to a physical attack, could result in instability, uncontrolled separation, or Cascading within an Interconnection.

4. **Applicability:**

   4.1. Functional Entities:

   4.1.1. ~~**4.1.1**~~ Transmission Owner that owns ~~**a**~~or jointly owns one or more Transmission ~~**station**~~stations or Transmission ~~**substation that meets any of the following**~~substations that meet the applicability criteria~~:~~ of Attachment 1.

   ~~**4.1.1.1** Transmission Facilities operated at 500 kV or higher. For the purpose of this criterion, the collector bus for a generation plant is not considered a Transmission Facility, but is part of the generation interconnection Facility.~~

   ~~**4.1.1.2** Transmission Facilities that are operating between 200 kV and 499 kV at a single station or substation, where the station or substation is connected at 200 kV or higher voltages to three or more other Transmission stations or substations and has an "aggregate weighted value" exceeding 3000 according to the table below. The "aggregate weighted value" for a single station or substation is determined by summing the "weight value per line" shown in the table below for each incoming and each outgoing BES Transmission Line that is connected to another Transmission station or substation. For the purpose of this criterion, the collector bus for a generation plant is not considered a Transmission Facility, but is part of the generation interconnection Facility.~~

~~**Voltage Value of a Line**~~	~~**Weight Value per Line**~~
~~less than 200 kV (not applicable)~~	~~(not applicable)~~
~~200 kV to 299 kV~~	~~700~~
~~300 kV to 499 kV~~	~~1300~~
~~500 kV and above~~	~~0~~

   ~~**4.1.1.3** Transmission Facilities at a single station or substation location that are identified by its Reliability Coordinator, Planning Coordinator, or Transmission Planner as critical to the derivation of Interconnection~~

~~Reliability Operating Limits (IROLs) and their associated contingencies.~~

~~**4.1.1.4** Transmission Facilities identified as essential to meeting Nuclear Plant Interface Requirements.~~

4.1.2. ~~**4.1.2**~~ Transmission Operator~~.~~

Exemption: Facilities in a "protected area," as defined in 10 C.F.R. § 73.2, within the scope of a security plan approved or accepted by the Nuclear Regulatory Commission are not subject to this Standard; or~~,~~ Facilities within the scope of a security plan approved or accepted by the Canadian Nuclear Safety Commission are not subject to this Reliability Standard.

5. ~~5.~~ Effective ~~Dates~~Date:

See Implementation Plan for CIP-~~014-2~~014-4.

~~6. Background:~~

~~This Reliability Standard addresses the directives from the FERC order issued March 7, 2014, *Reliability Standards for Physical Security Measures*, 146 FERC ¶ 61,166 (2014), which required NERC to develop a physical security reliability standard(s) to identify and protect facilities that if rendered inoperable or damaged could result in instability, uncontrolled separation, or Cascading within an Interconnection~~

B. Requirements and Measures

R1. Each Transmission Owner shall, ~~perform an initial risk assessment and subsequent risk assessments of its Transmission stations and Transmission substations (existing and planned to be in service within 24 months) that meet the criteria specified in Applicability Section 4.1.1. The initial and subsequent risk assessments shall consist of a transmission analysis or transmission analyses designed to~~ at least once every 36 calendar months, identify each applicable ~~the~~ Transmission station~~(s)~~ and Transmission substation~~(s) that if rendered inoperable or damaged could result in instability, uncontrolled separation, or Cascading within an Interconnection,~~ meeting any of the criteria in Attachment 1 that is either existing or planned to be in service within 36 calendar months. *[Violation Risk Factor: High; Time-Horizon: Long-term Planning]*

~~**1.1.** Subsequent risk assessments shall be performed:~~

~~At least once every 30 calendar months for a Transmission Owner that has identified in its previous risk assessment (as verified according to Requirement R2) one or more Transmission stations or Transmission substations that if rendered inoperable or damaged could result in instability, uncontrolled separation, or Cascading within an Interconnection; or~~

M1. Examples of evidence may include, but are not limited to, dated written or electronic documentation of the ~~risk assessment of its~~ Transmission station(s) and Transmission substation(s) (existing and those planned to be in service within ~~24~~ 36 calendar months) that meet any of the criteria in Attachment 1 ~~Applicability Section 4.1.1 as specified in Requirement R1. Additionally, examples of acceptable evidence may include, but are not limited to, dated written or electronic documentation of the identification of the primary control center that operationally controls each Transmission station or Transmission substation identified in the Requirement R1 risk assessment as specified in Requirement R1, Part 1.2~~.

R2. Each Transmission Owner with applicable Transmission station(s) or Transmission substation(s) identified in Requirement R1 shall identify proximate existing Bulk Electric System (BES) Transmission station(s) and BES Transmission substation(s), irrespective of ownership, within 1500 feet or 457 meters (the shortest distance, measured substation fence line to substation fence line) of an applicable Transmission station or Transmission substation identified in Requirement R1. *[Violation Risk Factor: Medium; Time-Horizon: Long-term Planning]*

M2. Examples of evidence may include, but are not limited to, dated written or electronic documentation of the BES Transmission stations or BES Transmission substations identified in Requirement R2.

R3. Each Transmission Owner shall have a documented risk assessment methodology for evaluating the loss of each applicable Transmission station or Transmission substation identified in Requirement R1. The methodology shall include, at a minimum, the following: *[Violation Risk Factor: High; Time-Horizon: Long-term Planning]*

3.1. Documented criteria for assessing instability, uncontrolled separation, or Cascading within an Interconnection. The criteria shall include, at a minimum, technically justified thresholds identifying unacceptable generation and load loss within an Interconnection.

3.2. A provision that steady-state and dynamic simulations shall each be performed using at a minimum one System peak Load case and one System Off-Peak Load case.

3.3. Specifications for simulations at each applicable Transmission station or Transmission substation identified in accordance with Requirement R1 and, if applicable, at each associated proximate existing BES Transmission station(s) and BES Transmission substation(s) identified in accordance with Requirement R2, that include:

3.3.1. At the applicable Transmission station or Transmission substation:

3.3.1.1. Prior loss of communication and Protection Systems;

3.3.1.2. Application of a Fault or Faults; and

3.3.1.3. Delayed (remote) clearing times shall be used unless otherwise technically substantiated.

3.3.2. At each proximate existing BES Transmission station(s) and BES Transmission substation(s), as applicable:

3.3.2.1. Application of a Fault or Faults, either simultaneous with or following the Fault or Faults applied under Part 3.3.1.2; and

3.3.2.2. Normal clearing times shall be used unless otherwise technically substantiated.

3.3.3. A documented justification for the Fault(s) associated with physical attack to be simulated. A single justification may be used for multiple locations. The justification shall include at a minimum:

3.3.3.1. The type of credible high-severity physical attack considered; and

3.3.3.2. The type of Fault(s) selected based upon the attack considered.

3.3.4. Removal of all Elements that Protection Systems and other controls are expected to automatically disconnect.

3.3.5. Actual or more conservative clearing times shall be used.

M3. Each Transmission Owner shall provide dated evidence, such as electronic or hard copies, of a risk assessment methodology satisfying Requirement R3.

R4. Each Transmission Owner with applicable Transmission station(s) and Transmission substation(s) identified in Requirement R1 jointly owned by multiple Transmission Owners shall coordinate with each appropriate Transmission Owner(s) to determine and document their individual and joint responsibilities under Requirement R3 and Requirement R5. *[Violation Risk Factor: Medium; Time-Horizon: Operations Planning, Long-term Planning]*

M4. Examples of acceptable evidence may include, but are not limited to, dated documentation, such as meeting minutes, agreements, and email correspondence, that identifies that agreement has been reached on individual and joint responsibilities for performing the required risk assessments.

R5. At least once every 36 calendar months, each Transmission Owner shall perform a risk assessment to identify applicable Transmission station(s) and Transmission substation(s) identified in Requirement R1, that if rendered inoperable or damaged could result in instability, uncontrolled separation, or Cascading within an Interconnection, using the methodology established in Requirement R3. Jointly owned Transmission station(s) and Transmission substation(s) shall be assessed according to the responsibilities documented under Requirement R4. If proximate BES Transmission station(s) and BES Transmission substation(s) were identified in Requirement R2, they shall be included in the risk assessment according to Requirement R3, Part 3.3. *[Violation Risk Factor: High; Time-Horizon: Operations Planning, Long-term Planning]*

5.1. If during a risk assessment, a Transmission station or Transmission substation is identified in either the dynamic or steady-state simulation as resulting in instability, uncontrolled separation, or Cascading within an Interconnection when rendered inoperable or damaged, then no further simulation is required.

5.2. If ~~At least once every 60 calendar months for a Transmission Owner that has not identified in its~~ a previous risk assessment ~~(as verified according to Requirement R2) any Transmission stations or Transmission substations that if rendered inoperable or damaged could result in~~ has identified a Transmission station or Transmission substation as causing instability, uncontrolled separation, or Cascading within an Interconnection when rendered inoperable or damaged, then the Transmission Owner may forgo additional assessments on that Transmission station or Transmission substation. Requirement R5, Part 5.3 and Requirement R7 through Requirement R10 still apply to that Transmission station or Transmission substation until a new risk assessment demonstrates otherwise.

5.3. ~~**1.2.**~~ The Transmission Owner shall identify the primary control center that operationally controls each Transmission station or Transmission substation

identified ~~in the Requirement R1 risk assessment~~ as resulting in instability, uncontrolled separation, or Cascading within an Interconnection when rendered inoperable or damaged in the Requirement R5 risk assessment.

M5. Examples of acceptable evidence may include, but are not limited to, dated written or electronic documentation of the risk assessment satisfying Requirement R5 including the identified Transmission station(s) or Transmission substation(s). For Requirement R5, Part 5.3, examples of acceptable evidence may include, but are not limited to, dated written or electronic documentation of the identification of the primary control center that operationally controls each identified Transmission station or Transmission substation.

R6. ~~**R2.**~~ Each Transmission Owner shall have an unaffiliated third party verify the risk assessment performed under Requirement ~~R1~~R5. The verification may occur ~~concurrent~~concurrently with or after the risk assessment performed under Requirement ~~R1. *[VRF*~~R5. *[Violation Risk Factor: Medium; Time-Horizon: Long-term Planning]*

6.1. ~~**2.1.**~~ Each Transmission Owner shall select an unaffiliated verifying entity that is either:

- A registered Planning Coordinator, Transmission Planner, or Reliability Coordinator; or
- An entity that has transmission planning or analysis experience.

6.2. ~~**2.2.**~~ The unaffiliated ~~third party~~third-party verification shall verify the Transmission Owner's risk assessment performed under Requirement ~~R1~~R5, which may include recommendations for the addition or deletion of a Transmission station(s) or Transmission substation(s). The Transmission Owner shall ensure the verification is completed within 90 calendar days following the completion of the Requirement ~~R1~~R5 risk assessment.

6.3. ~~**2.3.**~~ If the unaffiliated verifying entity recommends that the Transmission Owner add a Transmission station(s) or Transmission substation(s) to, or remove a Transmission station~~(s)~~ or Transmission substation~~(s)~~ from, its identification under Requirement ~~R1~~R5, the Transmission Owner shall either, within 60 calendar days of completion of the verification, for each recommended addition or removal of a Transmission station or Transmission substation:

- Modify its identification under Requirement ~~R1~~R5 consistent with the recommendation; or
- Document the technical basis for not modifying the identification in accordance with the recommendation.

6.4. ~~**2.4.**~~ Each Transmission Owner shall implement procedures, such as the use of non-disclosure agreements, for protecting sensitive or confidential information made available to the unaffiliated ~~third party~~third-party verifier and to protect or

exempt sensitive or confidential information developed pursuant to this Reliability Standard from public disclosure.

M6. ~~**M2.**~~ Examples of acceptable evidence may include, but are not limited to, dated written or electronic documentation that the Transmission Owner completed an unaffiliated third party verification of the Requirement ~~R1~~R5 risk assessment and satisfied all of the applicable provisions of Requirement ~~R2~~R6, including, if applicable, documenting the technical basis for not modifying the ~~Requirement R1~~ identification in Requirements R1, R2, R3, R4, and R5 as specified under Part ~~2.3~~6.3. Additionally, examples of evidence may include, but are not limited to, written or electronic documentation of procedures to protect information under Part ~~2.4~~6.4.

R7. ~~**R3.**~~ For a primary control center(s) identified by the Transmission Owner according to Requirement ~~R1~~R5, Part ~~1.2~~5.3 that a) operationally controls an identified Transmission station or Transmission substation verified according to Requirement ~~R2~~R6, and b) is not under the operational control of the Transmission Owner: the Transmission Owner shall, within seven calendar days following completion of Requirement ~~R2~~R6, notify the Transmission Operator that has operational control of the primary control center of such identification and the date of completion of Requirement ~~R2. *[VRF*~~R6. *[Violation Risk Factor: Lower; Time-Horizon: Long-term Planning]*

7.1. ~~**3.1.**~~ If a Transmission station or Transmission substation previously identified under ~~Requirement~~Requirements R1 and R5 and verified according to Requirement ~~R2~~R6 is removed from the identification during a subsequent risk assessment performed according to Requirement ~~R1~~R5 or a verification according to Requirement ~~R2~~R6, then the Transmission Owner shall, within seven calendar days following the verification or the subsequent risk assessment, notify the Transmission Operator that has operational control of the primary control center of the removal.

M7. ~~**M3.**~~ Examples of acceptable evidence may include, but are not limited to, ~~dated~~ written or electronic notifications or communications that the Transmission Owner notified each Transmission Operator, as applicable, according to Requirement ~~R3~~R7.

R8. ~~**R4.**~~ Each Transmission Owner that identified a Transmission station, Transmission substation, or a primary control center in Requirement ~~R1~~R5 and verified according to Requirement ~~R2~~R6, and each Transmission Operator notified by a Transmission Owner according to Requirement ~~R3~~R7, shall conduct an evaluation of the potential threats and vulnerabilities of a physical attack to each of their respective Transmission station(s), Transmission substation(s), and primary control center(s) identified in Requirement ~~R1~~R5 and verified according to Requirement ~~R2~~R6. The evaluation shall consider the following: *[~~VRF~~Violation Risk Factor: Medium; Time-Horizon: Operations Planning, Long-term Planning]*

8.1. ~~**4.1.**~~ Unique characteristics of the identified and verified Transmission station(s), Transmission substation(s), and primary control center(s);

8.2. ~~**4.2.**~~ Prior history of attack(s) on similar facilities taking into account the frequency, geographic proximity, and severity of past physical security related events; and

8.3. ~~**4.3.**~~ Intelligence or threat warnings received from sources such as law enforcement, the Electric Reliability Organization (ERO), the Electricity Sector Information Sharing and Analysis Center (~~ES-ISAC~~E-ISAC), U.S. federal and/or Canadian governmental agencies, or their successors.

~~M4~~M8. Examples of evidence may include, but are not limited to, dated written or electronic documentation that the Transmission Owner or Transmission Operator conducted an evaluation of the potential threats and vulnerabilities of a physical attack to their respective Transmission station(s), Transmission substation(s), and primary control center(s) as specified in Requirement ~~R4~~R8.

R9. ~~**R5.**~~ Each Transmission Owner that identified a Transmission station, Transmission substation, or primary control center in Requirement ~~R1~~R5 and verified according to Requirement ~~R2~~R6, and each Transmission Operator notified by a Transmission Owner according to Requirement ~~R3~~R7, shall develop and implement a documented physical security plan(s) that covers their respective Transmission station(s), Transmission substation(s), and primary control center(s). The physical security plan(s) shall be developed within 120 calendar days following the completion of Requirement ~~R2~~R6 and executed according to the timeline specified in the physical security plan(s). The physical security plan(s) shall include the following attributes: [~~*VRF*~~*Violation Risk Factor*: *High; Time-Horizon: Long-term Planning*]

9.1. ~~**5.1.**~~ Resiliency or security measures designed collectively to deter, detect, delay, assess, communicate, and respond to potential physical threats and vulnerabilities identified during the evaluation conducted in Requirement ~~R4~~R8.

9.2. ~~**5.2.**~~ Law enforcement contact and coordination information.

9.3. ~~**5.3.**~~ A timeline for executing the physical security enhancements and modifications specified in the physical security plan.

9.4. ~~**5.4.**~~ Provisions to evaluate evolving physical threats, and their corresponding security measures, to the Transmission station(s), Transmission substation(s), or primary control center(s).

~~M5~~M9. Examples of evidence may include, but are not limited to, dated written or electronic documentation of its physical security plan(s) that covers their respective identified and verified Transmission station(s), Transmission substation(s), and primary control center(s) as specified in Requirement ~~R5~~R6, and additional evidence demonstrating execution of the physical security plan according to the timeline specified in the physical security plan.

R10. ~~**R6.**~~ Each Transmission Owner that identified a Transmission station, Transmission substation, or primary control center in Requirement ~~R1~~R5 and verified according to Requirement ~~R2~~R6, and each Transmission Operator notified by a Transmission Owner according to Requirement ~~R3~~R7, shall have an unaffiliated third party review the evaluation performed under Requirement ~~R4~~R8 and the security plan(s) developed under Requirement ~~R5~~R9. The review may occur concurrently with or after completion of the evaluation performed under Requirement ~~R4~~R8 and the security plan development under Requirement ~~R5. *[VRF*~~R9. *[Violation Risk Factor: Medium; Time-Horizon: Long-term Planning]*

10.1. ~~**6.1.**~~ Each Transmission Owner and Transmission Operator shall select an unaffiliated ~~third party~~third-party reviewer from the following:

- An entity or organization with electric industry physical security experience and whose review staff has at least one member who holds either a Certified Protection Professional (CPP) or Physical Security Professional (PSP) certification~~.~~;
- An entity or organization approved by the ERO~~.~~;
- A governmental agency with physical security expertise~~.~~; or
- An entity or organization with demonstrated law enforcement, government, or military physical security expertise.

10.2. ~~**6.2.**~~ The Transmission Owner or Transmission Operator, respectively, shall ensure that the unaffiliated ~~third party~~third-party review is completed within 90 calendar days of completing the security plan(s) developed in Requirement ~~R5~~R9. The unaffiliated ~~third party~~third-party review may, but is not required to, include recommended changes to the evaluation performed under Requirement ~~R4~~R8 or the security plan(s) developed under Requirement ~~R5~~R9.

10.3. ~~**6.3.**~~ If the unaffiliated ~~third party~~third-party reviewer recommends changes to the evaluation performed under Requirement ~~R4~~R8 or security plan(s) developed under Requirement ~~R5~~R9, the Transmission Owner or Transmission Operator shall, within 60 calendar days of the completion of the unaffiliated third party review, for each recommendation:

- Modify its evaluation or security plan(s) consistent with the recommendation; or
- Document the reason(s) for not modifying the evaluation or security plan(s) consistent with the recommendation.

10.4. ~~**6.4.**~~ Each Transmission Owner and Transmission Operator shall implement procedures, such as the use of non-disclosure agreements, for protecting sensitive or confidential information made available to the unaffiliated ~~third party~~third-party reviewer and to protect or exempt sensitive or confidential

information developed pursuant to this Reliability Standard from public disclosure.

~~M6~~M10. Examples of evidence may include, but are not limited to, written or electronic documentation that the Transmission Owner or Transmission Operator had an unaffiliated third party review the evaluation performed under Requirement ~~R4~~R8 and the security plan(s) developed under Requirement ~~R5~~R9 as specified in Requirement ~~R6~~R10 including, if applicable, documenting the reasons for not modifying the evaluation or security plan(s) in accordance with a recommendation under Part ~~6.3~~10.3. Additionally, examples of evidence may include, but are not limited to, written or electronic documentation of procedures to protect information under Part ~~6.4~~10.4.

C. Compliance

1. Compliance Monitoring Process

1.1. Compliance Enforcement Authority

~~: As defined in the NERC Rules of Procedure,~~ "Compliance Enforcement Authority" means NERC or the Regional Entity in their respective roles of monitoring and enforcing compliance with the NERC Reliability Standards.

~~**1.2. Evidence Retention**~~

1.2. Evidence Retention: The following evidence retention ~~periods~~period(s) identify the period of time an entity is required to retain specific evidence to demonstrate compliance. For instances where the evidence retention period specified below is shorter than the time since the last audit, the Compliance Enforcement Authority may ask an entity to provide other evidence ~~during an on-site visit~~ to show that it was compliant for the ~~full-time~~full-time period since the last audit.

The Transmission Owner and Transmission Operator shall keep data or evidence to show compliance, as identified below, unless directed by its Compliance Enforcement Authority ~~()~~ to retain specific evidence for a longer period of time as part of an investigation~~.~~:

The responsible entities shall retain ~~documentation as~~ evidence, as per Requirements R1 through R10, for three years.

If a Responsible Entity is found non-compliant, it shall keep information related to the non-compliance until mitigation is complete and approved, or for the time specified above, whichever is longer.

The CEA shall keep the last audit records and all requested and submitted subsequent audit records~~, subject to the confidentiality provisions of Section 1500 of the Rules of Procedure and the provisions of Section 1.4 below~~.

~~**1.3. Compliance Monitoring and Assessment Processes:**~~

~~Compliance Audits~~

~~Self-Certifications~~
~~Spot Checking~~

1.3. Compliance Monitoring and Enforcement Program: "Compliance Monitoring Enforcement Program" or "CMEP" means, depending on the context (1) the NERC Compliance Monitoring and Enforcement Program (Appendix 4C to the NERC Rules of Procedure) or the Commission-approved program of a Regional Entity, as applicable, or (2) the program, department or organization within

NERC or a Regional Entity that is responsible for performing compliance monitoring and enforcement activities with respect to Registered Entities' compliance with Reliability Standards.

Compliance Violation Investigations Severity Levels

Self-Reporting

Complaints Text

2. Table of Compliance Elements

R #	Time Horizon	VRF	Violation Severity Levels (CIP-014-3)		
		Lower VSL	Moderate VSL	High VSL	Severe VSL
R1	Long-term Planning	The Transmission Owner performed an initial risk assessment but did so after the date specified in the implementation plan for performing the initial risk assessment but less than or equal to two calendar months after that date; OR The Transmission Owner that has identified in its previous risk assessment one or more Transmission stations or Transmission substations that if rendered inoperable or damaged could result in instability, uncontrolled separation, or Cascading within an Interconnection	The Transmission Owner performed an initial risk assessment but did so more than two calendar months after the date specified in the implementation plan for performing the initial risk assessment but less than or equal to four calendar months after that date; OR The Transmission Owner that has identified in its previous risk assessment one or more Transmission stations or Transmission substations that if rendered inoperable or damaged could result in instability, uncontrolled separation, or Cascading within an Interconnection performed a subsequent	The Transmission Owner performed an initial risk assessment but did so more than four calendar months after the date specified in the implementation plan for performing the initial risk assessment but less than or equal to six calendar months after that date; OR The Transmission Owner that has identified in its previous risk assessment one or more Transmission stations or Transmission substations that if rendered inoperable or damaged could result in instability, uncontrolled separation, or Cascading within an Interconnection performed a subsequent	The Transmission Owner performed an initial risk assessment but did so more than six calendar months after the date specified in the implementation plan for performing the initial risk assessment; OR The Transmission Owner failed to perform an initial risk assessment; OR The Transmission Owner that has identified in its previous risk assessment one or more Transmissionstations or Transmission substations that if rendered inoperable or damaged could result in instability, uncontrolled separation,

R #	Time Horizon	VRF Violation Severity Levels (CIP-014-3)			
		Lower VSL	Moderate VSL	High VSL	Severe VSL
		performed a subsequent risk assessment but did so after 30 calendar months but less than or equal to 32 calendar months; OR The Transmission Owner that has not identified in its previous risk assessment any Transmission stations or Transmission substations that if rendered inoperable or damaged could result in instability, uncontrolled separation, or Cascading within an Interconnection performed a subsequent risk assessment but did so after 60 calendar months but less than or	risk assessment but did so after 32 calendar months but less than or equal to 34 calendar months; OR The Transmission Owner that has not identified in its previous risk assessment any Transmission stations or Transmission substations that if rendered inoperable or damaged could result in instability, uncontrolled separation, or Cascading within an Interconnection performed a subsequent risk assessment but did so after 62 calendar months but less than or equal to 64 calendar months.	risk assessment but did so after 34 calendar months but less than or equal to 36 calendar months; OR The Transmission Owner that has not identified in its previous risk assessment any Transmission stations or Transmission substations that if rendered inoperable or damaged could result in instability, uncontrolled separation, or Cascading within an Interconnection performed a subsequent risk assessment but did so after 64 calendar months but less than or equal to 66 calendar months; OR	or Cascading within an Interconnection performed a subsequent risk assessment but did so after more than 36 calendar months; OR The Transmission Owner that has identified in its previous risk assessment one or more Transmission stations or Transmission substations that if rendered inoperable or damaged could result in instability, uncontrolledseparation, or Cascading within an Interconnection failed to perform a risk assessment; OR The Transmission Owner that has not identified in its previous risk assessment any

R #	Time Horizon	VRF Violation Severity Levels (CIP-014-3)			
		Lower VSL	Moderate VSL	High VSL	Severe VSL
		equal to 62 calendar months.		The Transmission Owner performed a risk assessment but failed to include Part 1.2.	Transmission stations or Transmission substations that if rendered inoperable or damaged could result in instability, uncontrolled separation, or Cascading within an Interconnection performed a subsequent risk assessment but did so after more than 66 calendar months; OR The Transmission Owner that has not identified in its previous risk assessment any Transmission station and Transmission substations that if rendered inoperable or damaged could result in instability, uncontrolled separation, or Cascading within an Interconnection failed to perform a subsequent risk assessment.

	Violation Severity Levels			
	Lower VSL	**Moderate VSL**	**High VSL**	**Severe VSL**
R1.	The Transmission Owner identified each applicable Transmission station(s) and Transmission substation(s) per Attachment 1, but did so after 36 calendar months, but less than or equal to 38 calendar months. OR The Transmission Owner identified each applicable Transmission station(s) and Transmission substation(s), but failed to identify less than or equal to 10% of the applicable Transmission station(s) and Transmission substation(s) per Attachment 1.	The Transmission Owner identified each applicable Transmission station(s) and Transmission substation(s) per Attachment 1, but did so after 38 calendar months, but less than or equal to 40 calendar months. OR The Transmission Owner identified each applicable Transmission station(s) and Transmission substation(s), but failed to identify more than 10% and less than or equal to 20% of the applicable Transmission station(s) and Transmission substation(s) per Attachment 1.	The Transmission Owner identified each applicable Transmission station(s) and Transmission substation(s) per Attachment 1, but did so after 40 calendar months, but less than or equal to 42 calendar months. OR The Transmission Owner identified each applicable Transmission station(s) and Transmission substation(s), but failed to identify more than 20% and less than or equal to 30% of the applicable Transmission station(s) and Transmission substation(s) per Attachment 1.	The Transmission Owner failed to identify each applicable Transmission station(s) and Transmission substation(s) per Attachment 1. OR The Transmission Owner identified each applicable Transmission station(s) and Transmission substation(s) per Attachment 1, but did so after more than 42 calendar months. OR The Transmission Owner identified each applicable Transmission station(s) and Transmission substation(s), but failed to identify more than 30% of the applicable Transmission station(s) and Transmission substation(s) per Attachment 1.
R2.	N/A	N/A	N/A	The Transmission Owner with applicable Transmission

				station(s) or Transmission substation(s) identified in Requirement R1 did not identify existing BES Transmission station(s) and BES Transmission substation(s), irrespective of ownership, within 1500 feet or 457 meters (the shortest distance, measured substation fence line to substation fence line) of an applicable Transmission station or Transmission substation identified in Requirement R1.
R3.	N/A	The Transmission Owner has a risk assessment methodology that failed to include one of the requirements listed in Parts 3.1 through 3.3.	The Transmission Owner has a risk assessment methodology that failed to include two of the requirements listed in Parts 3.1 through 3.3.	The Transmission Owner has a risk assessment methodology that failed to include all three of the requirements listed in Parts 3.1 through 3.3. OR The Transmission Owner does not have a risk assessment methodology.
R4.	The Transmission Owner with applicable Transmission station(s) and Transmission substation(s) identified in Requirement R1 owned by multiple Transmission Owners failed to coordinate with each appropriate Transmission Owner(s) to determine and document their individual and joint responsibilities for documenting a risk assessment	The Transmission Owner with applicable Transmission station(s) and Transmission substation(s) identified in Requirement R1 owned by multiple Transmission Owners failed to coordinate with each appropriate Transmission Owner(s) to determine and document their individual and joint responsibilities for documenting a risk assessment	The Transmission Owner with applicable Transmission station(s) and Transmission substation(s) identified in Requirement owned by multiple Transmission Owners failed to coordinate with each appropriate Transmission Owner(s) to determine and document their individual and joint responsibilities for documenting a risk assessment	The Transmission Owner with applicable Transmission station(s) and Transmission substation(s) identified in Requirement R1 owned by multiple Transmission Owners failed to coordinate with each appropriate Transmission Owner(s) to determine and document their individual and joint responsibilities for documenting a risk assessment

	methodology under Requirement R3 and for performing any required risk assessments per Requirement R5 for less than or equal to 25% of jointly owned applicable Transmission station(s) and Transmission substation(s).	methodology under Requirement R3 and for performing any required risk assessments per Requirement R5 for more than 25% and less than or equal to 50% of jointly owned applicable Transmission station(s) and Transmission substation(s).	methodology under Requirement R3 and for performing any required risk assessments per Requirement R5 for more than 50% and less than or equal to 75% of jointly owned applicable Transmission station(s) and Transmission substation(s).	methodology under Requirement R3 and for performing any required risk assessments per Requirement R5 for more than 75% and less than or equal to 100% of any evidence for jointly owned applicable Transmission station(s) and Transmission substation(s).
R5.	The Transmission Owner performed a risk assessment, but did so after 36 calendar months, but less than or equal to 38 calendar months.	The Transmission Owner performed a risk assessment, but did so after 38 calendar months, but less than or equal to 40 calendar months. OR The Transmission Owner performed a risk assessment inconsistent with one of the methodology requirements listed in Requirement R3, Parts 3.1 through 3.3.	The Transmission Owner performed a risk assessment, but did so after 40 calendar months, but less than or equal to 42 calendar months. OR The Transmission Owner performed a risk assessment inconsistent with two of the methodology requirements listed in Requirement R3, Parts 3.1 through 3.3. OR The Transmission Owner performed a risk assessment, but failed to include the primary control center identified in Part 5.2.	The Transmission Owner performed a risk assessment, but did so after more than 42 calendar months. OR The Transmission Owner performed a risk assessment inconsistent with all three of the methodology requirements listed in Requirement R3, Parts 3.1 through 3.3.
~~R2~~ ~~Long-term Planning~~	The Transmission Owner had an unaffiliated third party verify the risk assessment performed under Requirement ~~R1~~R5, but did so	The Transmission Owner had an unaffiliated third party verify the risk assessment performed under Requirement ~~R1~~R5, but did so	The Transmission Owner had an unaffiliated third party verify the risk assessment performed under Requirement ~~R1~~R5, but did so	The Transmission Owner had an unaffiliated third party verify the risk assessment performed under Requirement ~~R1~~R5, but did so

~~Medium~~R6.	in more than 90 calendar days, but less than or equal to 100 calendar days following completion of Requirement ~~R1;~~R5. OR The Transmission Owner had an unaffiliated third party verify the risk assessment performed under Requirement ~~R1~~R5 and modified or documented the technical basis for not modifying its identification under Requirement ~~R1~~R5 as required by ~~Part 2.3~~Part6.3, but did so more than 60 calendar days and less than or equal to 70 calendar days from completion of the third party verification.	more than 100 calendar days, but less than or equal to 110 calendar days following completion of Requirement ~~R1;~~R5. ~~Or~~OR The Transmission Owner had an unaffiliated third party verify the risk assessment performed under Requirement ~~R1~~R5 and modified or documented the technical basis for not modifying its identification under Requirement ~~R1~~R5 as required by Part ~~2.3~~6.3, but did so more than 70 calendar days and less than or equal to 80 calendar days from completion of the third party verification.	more than 110 calendar days, but less than or equal to 120 calendar days following completion of Requirement ~~R1;~~R5. OR The Transmission Owner had an unaffiliated third party verify the risk assessment performed under Requirement ~~R1~~R5 and modified or documented the technical basis for not modifying its identification under Requirement ~~R1~~R5 as required by Part ~~2.3~~6.3, but did so more than 80 calendar days from completion of the third party verification~~;~~. OR The Transmission Owner had an unaffiliated third party verify the risk assessment performed under Requirement ~~R1~~R5, but failed to modify or document the technical basis for not modifying its identification under ~~R1~~R4 as required by Part ~~2.3~~6.3.	more than 120 calendar days following completion of Requirement ~~R1;~~R5. OR The Transmission Owner failed to have an unaffiliated third party verify the risk assessment performed under Requirement ~~R1;~~R5. OR The Transmission Owner had an unaffiliated third party verify the risk assessment performed under Requirement ~~R1~~R5, but failed to implement procedures for protecting information per Part ~~2.4~~6.4.
~~R3~~	The Transmission Owner notified the Transmission	The Transmission Owner notified the Transmission	The Transmission Owner notified the Transmission	The Transmission Owner notified the Transmission

Long-term Planning LowerR7.	Operator that operates the primary control center as specified in Requirement R3R7, but did so more than seven calendar days and less than or equal to nine calendar days following the completion of Requirement R2;R6. OR The Transmission Owner notified the Transmission Operator that operates the primary control center of the removal from the identification in Requirement R1R5, but did so more than seven calendar days and less than or equal to nine calendar days following the verification or the subsequent risk assessment.	Operator that operates the primary control center as specified in Requirement R3R7, but did so more than nine calendar days and less than or equal to 11 calendar days following the completion of Requirement R2;R6. OR The Transmission Owner notified the Transmission Operator that operates the primary control center of the removal from the identification in Requirement R1R5, but did so more than nine calendar days and less than or equal to 11 calendar days following the verification or the subsequent risk assessment.	Operator that operates the primary control center as specified in Requirement R3R7, but did so more than 11 calendar days and less than or equal to 13 calendar days following the completion of Requirement R2;R6. OR The Transmission Owner notified the Transmission Operator that operates the primary control center of the removal from the identification in Requirement R1R5, but did so more than 11 calendar days and less than or equal to 13 calendar days following the verification or the subsequent risk assessment.	Operator that operates the primary control center as specified in Requirement R3R7, but did so more than 13 calendar days following the completion of Requirement R2;R6. OR The Transmission Owner failed to notify the Transmission Operator that it operates a control center identified in Requirement R1;R5. OR The Transmission Owner notified the Transmission Operator that operates the primary control center of the removal from the identification in Requirement R1R5, but did so more than 13 calendar days following the verification or the subsequent risk assessment. OR The Transmission Owner failed to notify the Transmission Operator that operates the primary control center of the removal from

				the identification in Requirement ~~R1~~R5.

		Violation Severity Levels			
		Lower VSL	**Moderate VSL**	**High VSL**	**Severe VSL**
~~R4~~R8.	**~~Operations Planning, Long-term Planning~~**	**~~Medium~~** N/A	The ~~Responsible Entity~~responsible entity conducted an evaluation of the potential physical threats and vulnerabilities to each of its Transmission station(s), Transmission substation(s), and primary control center(s) identified in Requirement ~~R1~~R5, but failed to consider one of Parts ~~4.1~~8.1 through ~~4.3~~8.3 in the evaluation.	The ~~Responsible Entity~~responsible entity conducted an evaluation of the potential physical threats and vulnerabilities to each of its Transmission station(s), Transmission substation(s), and primary control center(s) identified in Requirement ~~R1~~R5, but failed to consider two of Parts ~~4.1~~8.1 through ~~4.3~~8.3 in the evaluation.	The ~~Responsible Entity~~responsible entity failed to conduct an evaluation of the potential physical threats and vulnerabilities to each of its Transmission station(s), Transmission substation(s), and primary control center(s) identified in Requirement ~~R1;~~R5. OR The ~~Responsible Entity~~responsible entity conducted an evaluation of the potential physical threats and vulnerabilities to each of its Transmission station(s), Transmission substation(s), and primary control center(s) identified in Requirement ~~R1~~R5, but failed to consider Parts ~~4.1~~8.1 through ~~4.3~~8.3.

		Violation Severity Levels			
		Lower VSL	**Moderate VSL**	**High VSL**	**Severe VSL**
~~R5~~R9.	~~Long-term Planning~~	~~High~~ The ~~Responsible Entity~~responsible entity developed and implemented a documented physical security plan(s) that covers each of its Transmission station(s), Transmission substation(s), and primary control center(s) identified in Requirement ~~R1~~R5, but did so more than 120 calendar days, but less than or equal to 130 calendar days after completing Requirement ~~R2;~~R6. OR The ~~Responsible Entity~~responsible entity developed and implemented a documented physical security plan(s) that covers its Transmission station(s), Transmission substation(s), and primary control center(s) identified in Requirement ~~R1~~R5 and verified according to	The ~~Responsible Entity~~responsible entity developed and implemented a documented physical security plan(s) that covers each of its Transmission station(s), Transmission substation(s), and primary control center(s) identified in Requirement ~~R1~~R5, but did so more than 130 calendar days, but less than or equal to 140 calendar days after completing Requirement ~~R2;~~R6. OR The ~~Responsible Entity~~responsible entity developed and implemented a documented physical security plan(s) that covers its Transmission station(s), Transmission substation(s), and primary control center(s) identified in Requirement ~~R1~~R5 and verified according to Requirement ~~R2~~R6, but failed to include two of	The ~~Responsible Entity~~responsible entity developed and implemented a documented physical security plan(s) that covers each of its Transmission station(s), Transmission substation(s), and primary control center(s) identified in Requirement ~~R1~~R5, but did so more than 140 calendar days, but less than or equal to 150 calendar days after completing Requirement ~~R2;~~R6. OR The ~~Responsible Entity~~responsible entity developed and implemented a documented physical security plan(s) that covers its Transmission station(s), Transmission substation(s), and primary control center(s) identified in Requirement ~~R1~~R5 and verified according to Requirement ~~R2~~R6, but failed to include three of	The ~~Responsible Entity~~responsible entity developed and implemented a documented physical security plan(s) that covers each of its Transmission station(s), Transmission substation(s), and primary control center(s) identified in Requirement ~~R1~~R5, but did so more than 150 calendar days after completing the verification in Requirement ~~R2;~~ R6. OR The ~~Responsible Entity~~responsible entity failed to develop and implement a documented physical security plan(s) that covers its Transmission station(s), Transmission substation(s), and primary control center(s) identified in Requirement ~~R1~~R5 and verified according to Requirement ~~R2~~R6. OR

		Violation Severity Levels			
		Lower VSL	**Moderate VSL**	**High VSL**	**Severe VSL**
		Requirement ~~R2~~R6, but failed to include one of Parts ~~5.1~~9.1 through ~~5.4~~9.4 in the plan.	Parts ~~5.1~~9.1 through ~~5.4~~9.4 in the plan.	Parts ~~5.1~~9.1 through ~~5.4~~9.4 in the plan.	The ~~Responsible Entity~~responsible entity developed and implemented a documented physical security plan(s) that covers its Transmission station(s), Transmission substation(s), and primary control center(s) identified in Requirement ~~R1~~R5 and verified according to Requirement ~~2~~R6, but failed to include Parts ~~5.1~~9.1 through ~~5.4~~9.4 in the plan.
~~R6~~R10.	**~~Long-term Planning~~**	~~**Medium**~~ The ~~Responsible Entity~~responsible entity had an unaffiliated third party review the evaluation performed under Requirement ~~R4~~R8 and the security plan(s) developed under Requirement ~~R5~~R9, but did so in more than 90 calendar days, but less than or equal to 100 calendar days~~;~~. OR	The ~~Responsible Entity~~responsible entity had an unaffiliated third party review the evaluation performed under Requirement ~~R4~~R8 and the security plan(s) developed under Requirement ~~R5~~R9, but did so in more than 100 calendar days, but less than or equal to 110 calendar days~~;~~. OR The ~~Responsible Entity~~responsible entity	The ~~Responsible Entity~~responsible entity had an unaffiliated third party review the evaluation performed under Requirement ~~R4~~R8 and the security plan(s) developed under Requirement ~~R5~~R9, but did so more than 110 calendar days, but less than or equal to 120 calendar days~~;~~. OR The ~~Responsible Entity had~~responsible entity failed	The ~~Responsible Entity~~responsible entity failed to have an unaffiliated third party review the evaluation performed under Requirement ~~R4~~R8 and the security plan(s) developed under Requirement ~~R5~~R9 in more than 120 calendar days~~;~~. ~~OR~~ ~~The Responsible Entity failed to have an unaffiliated third party~~

		Violation Severity Levels			
		Lower VSL	**Moderate VSL**	**High VSL**	**Severe VSL**
		The ~~Responsible Entity~~responsible entity had an unaffiliated third party review the evaluation performed under Requirement ~~R4~~R8 and the security plan(s) developed under Requirement ~~R5~~R9 and modified or documented the reason for not modifying the security plan(s) as specified in Part ~~6.3~~10.3, but did so more than ~~60~~70 calendar days and less than or equal to ~~70~~80 calendar days following completion of the third party review.	had an unaffiliated third party review the evaluation performed under Requirement ~~R4~~R8 and the security plan(s) developed under Requirement ~~R5~~R9 and modified or documented the reason for not modifying the security plan(s) as specified in Part ~~6.3~~10.3, but did so more than ~~70 calendar days and less than or equal to~~ 80 calendar days following completion of the third party review. OR The responsible entity had an unaffiliated third party review the evaluation performed under Requirement R8 and the security plan(s) developed under Requirement R9, but did not document the reason for not modifying the security plan(s) as specified in Part 10.3.	to have an unaffiliated third party review the evaluation performed under Requirement ~~R4~~R8 and the security plan(s) developed under Requirement ~~R5 and modified or documented the reason for not modifying the security plan(s) as specified in Part 6.3 but did so more than 80 calendar days following completion of the third party review;~~R9. OR The ~~Responsible Entity~~responsible entity had an unaffiliated third party review the evaluation performed under Requirement ~~R4~~R8 and the security plan(s) developed under Requirement ~~R5~~R9, but ~~did not document the reason for not modifying the security plan(s) as specified in~~failed to implement procedures for	~~review the evaluation performed under Requirement R4 and the security plan(s) developed under Requirement R5;~~ ~~OR~~ ~~The Responsible Entity had an unaffiliated third party review the evaluation performed under Requirement R4 and the security plan(s) developed under Requirement R5 but failed to implement procedures for protecting information per Part 6.4.~~

		Violation Severity Levels			
		Lower VSL	Moderate VSL	High VSL	Severe VSL
				protecting information per Part ~~6.3~~10.4.	

D. Regional Variances

None.

E. Interpretations

None.

F. Associated Documents

~~None.~~

CIP-014-4 Implementation Plan

CIP-014-4 Technical Rationale Document

Version History

Version	Date	Action	Change Tracking
1	October 1, 2015	Effective Date	New
2	April 16, 2015	Revised to meet FERC Order 802 directive to remove “widespread”.	Revision
2	May 7, 2015	Adopted by the NERC Board of Trustees	
2	July 14, 2015	FERC Letter Order in Docket No. RD15-4-000 approving CIP-014-2	
3	January 19, 2022	Revised to remove Compliance Section 1.4	Revision
3	June 16, 2022	FERC Letter Order in Docket No. RD22-3-000 approving Modifications to CIP-014-3	Revision
3	June 16,2022	Effective Date	Revision
4	TBD	Revisions made by the Project 2023-06 drafting team	Revision

Guidelines and Technical Basis

Section 4Attachment 1 — Applicability Criteria

The purpose of Reliability Standard CIP-014 is to protect Transmission stations and Transmission substations, and their associated primary control centers that if rendered inoperable or damaged as a result of a physical attack could result in instability, uncontrolled separation, or Cascading within an Interconnection. To properly include those entities that own or operate such Facilities, the Reliability Standard CIP-014 first applies to Transmission Owners that own Transmission Facilities that meet the specific criteria in Applicability Section 4.1.1.1 through 4.1.1.4. The Facilities described in Applicability Section 4.1.1.1 through 4.1.1.4 mirror those Transmission Facilities that meet the bright line criteria for "Medium Impact" Transmission Facilities under Attachment 1 of Reliability Standard CIP-002-5.1. Each Transmission Owner that owns Transmission Facilities that meet the criteria in Section 4.1.1.1 through 4.1.1.4 is required to perform a risk assessment as specified in Requirement R1 to identify its Transmission stations and Transmission substations, and their associated primary control centers, that if rendered inoperable or damaged as a result of a physical attack could result in instability, uncontrolled separation, or Cascading within an Interconnection. The Standard Drafting Team (SDT) expects this population will be small and that many Transmission Owners that meet the applicability of this standard will not actually identify any such Facilities. Only those Transmission Owners with Transmission stations or Transmission substations identified in the risk assessment (and verified under Requirement R2) have performance obligations under Requirements R3 through R6.

This standard also applies to Transmission Operators. A Transmission Operator's obligations under the standard, however, are only triggered if the Transmission Operator is notified by an applicable Transmission Owner under Requirement R3 that the Transmission Operator operates a primary control center that operationally controls a Transmission station(s) or Transmission substation(s) identified in the Requirement R1 risk assessment. A primary control center operationally controls a Transmission station or Transmission substation when the control center's electronic actions can cause direct physical action at the identified Transmission station or Transmission substation, such as opening a breaker, as opposed to a control center that only has information from the Transmission station or Transmission substation and must coordinate direct action through another entity. Only Transmission Operators who are notified that they have primary control centers under this standard have performance obligations under Requirements R4 through R6. In other words, primary control center for purposes of this Standard is the control center that the Transmission Owner or Transmission Operator, respectively, uses as its primary, permanently manned site to physically operate a Transmission station or Transmission substation that is identified in Requirement R1 and verified in Requirement R2. Control centers that provide back-up capability are not applicable, as they are a form of resiliency and intentionally redundant.

The SDT considered several options for bright line criteria that could be used to determine applicability and provide an initial threshold that defines the set of Transmission stations and Transmission substations that would meet the directives of the FERC order on physical security (*i.e.*, those that could cause instability, uncontrolled separation, or Cascading within an

~~Interconnection). The SDT determined that using the criteria for Medium Impact Transmission Facilities in Attachment 1 of CIP-002-5.1 would provide a conservative threshold for defining which Transmission stations and Transmission substations must be included in the risk assessment in Requirement R1 of CIP-014. Additionally, the SDT concluded that using the CIP-002-5.1 Medium Impact criteria was appropriate because it has been approved by stakeholders, NERC, and FERC, and its use provides a technically sound basis to determine which Transmission Owners should conduct the risk assessment. As described in CIP-002-5.1, the failure of a Transmission station or Transmission substation that meets the Medium Impact criteria could have the capability to result in exceeding one or more Interconnection Reliability Operating Limits (IROLs). The SDT understands that using this bright line criteria to determine applicability may require some Transmission Owners to perform risk assessments under Requirement R1 that will result in a finding that none of their Transmission stations or Transmission substations would pose a risk of instability, uncontrolled separation, or Cascading within an Interconnection. However, the SDT determined that higher bright lines could not be technically justified to ensure inclusion of all Transmission stations and Transmission substations, and their associated primary control centers that, if rendered inoperable or damaged as a result of a physical attack could result in instability, uncontrolled separation, or Cascading within an Interconnection. Further guidance and technical basis for the bright line criteria for Medium Impact Facilities can be found in the Guidelines and Technical Basis section of CIP-002-5.1.~~

~~Additionally, the SDT determined that it was not necessary to include Generator Operators and Generator Owners in the Reliability Standard. First, Transmission stations or Transmission substations interconnecting generation facilities are considered when determining applicability. Transmission Owners will consider those Transmission stations and Transmission substations that include a Transmission station on the high side of the Generator Step-up transformer (GSU) using Applicability Section 4.1.1.1 and 4.1.1.2. As an example, a Transmission station or Transmission substation identified as a Transmission Owner facility that interconnects generation will be subject to the Requirement R1 risk assessment if it operates at 500kV or greater or if it is connected at 200 kV – 499kV to three or more other Transmission stations or Transmission substations and has an "aggregate weighted value" exceeding 3000 according to the table in Applicability Section 4.1.1.2. Second, the Transmission analysis or analyses conducted under Requirement R1 should take into account the impact of the loss of generation connected to applicable Transmission stations or Transmission substations. Additionally, the FERC order does not explicitly mention generation assets and is reasonably understood to focus on the most critical Transmission Facilities. The diagram below shows an example of a station.~~

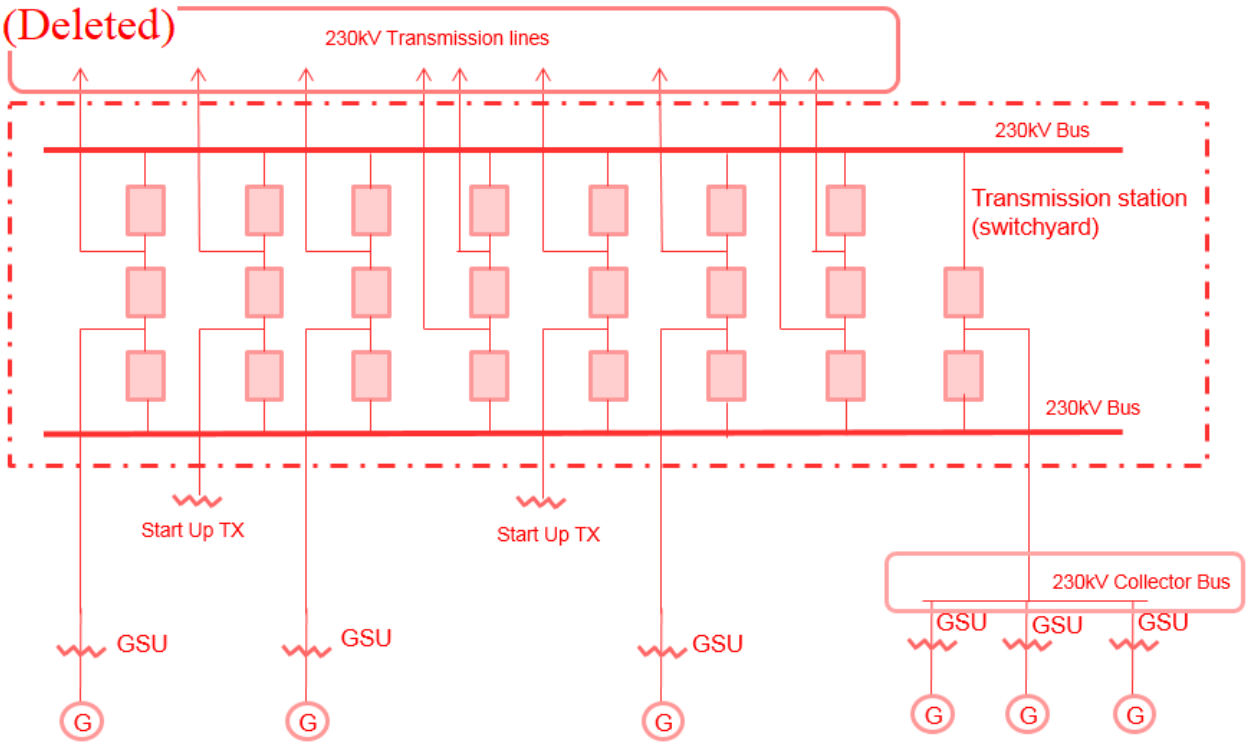

~~Also, the SDT uses the phrase "Transmission stations or Transmission substations" to recognize the existence of both stations and substations. Many entities in industry consider a substation to be a location with physical borders (i.e. fence, wall, etc.) that contains at least an autotransformer. Locations also exist that do not contain autotransformers, and many entities in industry refer to those locations as stations (switching stations or switchyards). Therefore, the SDT chose to use both "station" and "substation" to refer to the locations where groups of Transmission Facilities exist.~~

~~On the issue of joint ownership, the SDT recognizes that this issue is not unique to CIP-014, and expects that the applicable Transmission Owners and Transmission Operators will develop memorandums of understanding, agreements, Coordinated Functional Registrations, or procedures, etc., to designate responsibilities under CIP-014 when joint ownership is at issue, which is similar to what many entities have completed for other Reliability Standards.~~

~~The language contained in the applicability section regarding the collector bus is directly copied from CIP-002-5.1, Attachment 1, and has no additional meaning within the CIP-014 standard.~~

~~Requirement R1~~

~~The initial risk assessment required under Requirement R1 must be completed on or before the effective date of the standard. Subsequent risk assessments are to be performed at least once every 30 or 60 months depending on the results of the previous risk assessment per Requirement R1, Part 1.1. In performing the risk assessment under Requirement R1, the Transmission Owner should first identify their population of Transmission stations and Transmission substations that meet the criteria contained in Applicability Section 4.1.1.~~

~~Requirement R1 then requires the Transmission Owner to perform a risk assessment, consisting of a transmission analysis, to determine which of those Transmission stations and Transmission Substations if rendered inoperable or damaged could result in instability, uncontrolled separation, or Cascading within an Interconnection. The requirement is not to require identification of, and thus, not intended to bring within the scope of the standard a Transmission station or Transmission substation unless the applicable Transmission Owner determines through technical studies and analyses based on objective analysis, technical expertise, operating experience and experienced judgment that the loss of such facility would have a critical impact on the operation of the Interconnection in the event the asset is rendered inoperable or damaged. In the November 20, 2014 Order, FERC reiterated that "only an instability that has a "critical impact on the operation of the interconnection" warrants finding that the facility causing the instability is critical under Requirement R1." The Transmission Owner may determine the criteria for critical impact by considering, among other criteria, any of the following:~~

- ~~Criteria or methodology used by Transmission Planners or Planning Coordinators in TPL-001-4, Requirement R6~~
- ~~NERC EOP-004-2 reporting criteria~~
- ~~Area or magnitude of potential impact~~

~~The standard does not mandate the specific analytical method for performing the risk assessment. The Transmission Owner has the discretion to choose the specific method that best suites its needs. As an example, an entity may perform a Power Flow analysis and stability analysis at a variety of load levels.~~

~~Performing Risk Assessments~~

~~The Transmission Owner has the discretion to select a transmission analysis method that fits its facts and system circumstances. To mandate a specific approach is not technically desirable and may lead to results that fail to adequately consider regional, topological, and system circumstances. The following guidance is only an example on how a Transmission Owner may perform a power flow and/or stability analysis to identify those Transmission stations and Transmission substations that if rendered inoperable or damaged as a result of a physical attack could result in instability, uncontrolled separation, or Cascading within an Interconnection. An entity could remove all lines, without regard to the voltage level, to a single Transmission station or Transmission substation and review the simulation results to assess system behavior to determine if Cascading of Transmission Facilities, uncontrolled separation, or voltage or frequency instability is likely to occur over a significant area of the Interconnection. Using engineering judgment, the Transmission Owner (possibly in consultation with regional planning or operation committees and/or ISO/RTO committee input) should develop criteria (e.g. imposing a fault near the removed Transmission station or Transmission substation) to identify a contingency or parameters that result in potential instability, uncontrolled separation, or Cascading within an Interconnection. Regional consultation on these matters is likely to be helpful and informative, given that the inputs for the risk assessment and the attributes of what constitutes instability, uncontrolled separation, or Cascading within an Interconnection will~~

likely vary from region-to-region or from ISO-to-ISO based on topology, system characteristics, and system configurations. Criteria could also include post-contingency facilities loadings above a certain emergency rating or failure of a power flow case to converge. Available special protection systems (SPS), if any, could be applied to determine if the system experiences any additional instability which may result in uncontrolled separation. Example criteria may include:

(a) Thermal overloads beyond facility emergency ratings;

(b) Voltage deviation exceeding ± 10%; or

(c) Cascading outage/voltage collapse; or

(d) Frequency below under-frequency load-shed points

Periodicity

A Transmission Owner who identifies one or more Transmission stations or Transmission substations (as verified under Requirement R2) that if rendered inoperable or damaged could result in instability, uncontrolled separation, or Cascading within an Interconnection is required to conduct a risk assessment at least once every 30 months. This period ensures that the risk assessment remains current with projected conditions and configurations in the planned system. This risk assessment, as the initial assessment, must consider applicable planned Transmission stations and Transmission substations to be in service within 24 months. The 30 month timeframe aligns with the 24 month planned to be in service date because the Transmission Owner is provided the flexibility, depending on its planning cycle and the frequency in which it may plan to construct a new Transmission station or Transmission substation to more closely align these dates. The requirement is to conduct the risk assessment at least once every 30 months, so for a Transmission Owner that believes it is better to conduct a risk assessment once every 24 months, because of its planning cycle, it has the flexibility to do so.

Transmission Owners that have not identified any Transmission stations or Transmission substations (as verified under Requirement R2) that if rendered inoperable or damaged could result in instability, uncontrolled separation, or Cascading within an Interconnection are unlikely to see changes to their risk assessment in the Near-Term Planning Horizon. Consequently, a 60 month periodicity for completing a subsequent risk assessment is specified.

Identification of Primary Control Centers

After completing the risk assessment specified in Requirement R1, it is important to additionally identify the primary control center that operationally controls each Transmission station or Transmission substation that if rendered inoperable or damaged could result in instability, uncontrolled separation, or Cascading within an Interconnection. A primary control center "operationally controls" a Transmission station or Transmission substation when the control center's electronic actions can cause direct physical actions at the identified Transmission station and Transmission substation, such as opening a breaker.

Requirement R2

This requirement specifies verification of the risk assessment performed under Requirement R1 by an entity other than the owner or operator of the Requirement R1 risk assessment.

A verification of the risk assessment by an unaffiliated third party, as specified in Requirement R2, could consist of:

1. Certifying that the Requirement R1 risk assessment considers the Transmission stations and Transmission substations identified in Applicability Section 4.1.1.
2. Review of the model used to conduct the risk assessment to ensure it contains sufficient system topology to identify Transmission stations and Transmission substations that if rendered inoperable or damaged could cause instability, uncontrolled separation, or Cascading within an Interconnection.
3. Review of the Requirement R1 risk assessment methodology.

This requirement provides the flexibility for a Transmission Owner to select from unaffiliated registered and non-registered entities with transmission planning or analysis experience to perform the verification of the Requirement R1 risk assessment. The term unaffiliated means that the selected verifying entity cannot be a corporate affiliate (*i.e.*, the verifying or third party reviewer cannot be an entity that corporately controls, is controlled by or is under common control with, the Transmission Owner). The verifying entity also cannot be a division of the Transmission Owner that operates as a functional unit.

The prohibition on registered entities using a corporate affiliate to conduct the verification, however, does not prohibit a governmental entity (e.g., a city, a municipality, a U.S. federal power marketing agency, or any other political subdivision of U.S. or Canadian federal, state, or provincial governments) from selecting as the verifying entity another governmental entity within the same political subdivision. For instance, a U.S. federal power marketing agency may select as its verifier another U.S. federal agency to conduct its verification so long as the selected entity has transmission planning or analysis experience. Similarly, a Transmission Owner owned by a Canadian province can use a separate agency of that province to perform the verification. The verifying entity, however, must still be a third party and cannot be a division of the registered entity that operates as a functional unit.

Requirement R2 also provides that the "verification may occur concurrent with or after the risk assessment performed under Requirement R1." This provision is designed to provide the Transmission Owner the flexibility to work with the verifying entity throughout (*i.e.*, concurrent with) the risk assessment, which for some Transmission Owners may be more efficient and effective. In other words, a Transmission Owner could collaborate with their unaffiliated verifying entity to perform the risk assessment under Requirement R1 such that both Requirement R1 and Requirement R2 are satisfied concurrently. The intent of Requirement R2 is to have an entity other than the owner or operator of the facility to be involved in the risk assessment process and have an opportunity to provide input. Accordingly, Requirement R2 is designed to allow entities the discretion to have a two-step process, where the Transmission Owner performs the risk assessment and subsequently has a third party review that assessment, or a one-step process, where the entity collaborates with a third party to perform the risk assessment.

Characteristics to consider in selecting a third party reviewer could include:

- Registered Entity with applicable planning and reliability functions.
- Experience in power system studies and planning.
- The entity's understanding of the MOD standards, TPL standards, and facility ratings as they pertain to planning studies.
- The entity's familiarity with the Interconnection within which the Transmission Owner is located.

With respect to the requirement that Transmission owners develop and implement procedures for protecting confidential and sensitive information, the Transmission Owner could have a method for identifying documents that require confidential treatment. One mechanism for protecting confidential or sensitive information is to prohibit removal of sensitive or confidential information from the Transmission Owner's site. Transmission Owners could include such a prohibition in a non-disclosure agreement with the verifying entity.

A Technical feasibility study is not required in the Requirement R2 documentation of the technical basis for not modifying the identification in accordance with the recommendation.

On the issue of the difference between a verifier in Requirement R2 and a reviewer in Requirement R6, the SDT indicates that the verifier will confirm that the risk assessment was completed in accordance with Requirement R1, including the number of Transmission stations and substations identified, while the reviewer in Requirement R6 is providing expertise on the manner in which the evaluation of threats was conducted in accordance with Requirement R4, and the physical security plan in accordance with Requirement R5. In the latter situation there is no verification of a technical analysis, rather an application of experience and expertise to provide guidance or recommendations, if needed.

Parts 2.4 and 6.4 require the entities to have procedures to protect the confidentiality of sensitive or confidential information. Those procedures may include the following elements:

1. Control and retention of information on site for third-party verifiers/reviewers.
2. Only "need to know" employees, etc., get the information.
3. Marking documents as confidential
4. Securely storing and destroying information when no longer needed.
5. Not releasing information outside the entity without, for example, General Counsel sign-off.

Requirement R3

Some Transmission Operators will have obligations under this standard for certain primary control centers. Those obligations, however, are contingent upon a Transmission Owner first completing the risk assessment specified by Requirement R1 and the verification specified by Requirement R2. Requirement R3 is intended to ensure that a Transmission Operator that has operational control of a primary control center identified in Requirement R1 receive notice so

that the Transmission Operator may fulfill the rest of the obligations required in Requirements R4 through R6. Since the timing obligations in Requirements R4 through R6 are based upon completion of Requirement R2, the Transmission Owner must also include within the notice the date of completion of Requirement R2. Similarly, the Transmission Owner must notify the Transmission Operator of any removals from identification that result from a subsequent risk assessment under Requirement R1 or as a result of the verification process under Requirement R2.

Requirement R4

This requirement requires owners and operators of facilities identified by the Requirement R1 risk assessment and that are verified under Requirement R2 to conduct an assessment of potential threats and vulnerabilities to those Transmission stations, Transmission substations, and primary control centers using a tailored evaluation process. Threats and vulnerabilities may vary from facility to facility based on any number of factors that include, but are not limited to, location, size, function, existing physical security protections, and attractiveness as a target.

In order to effectively conduct a threat and vulnerability assessment, the asset owner may be the best source to determine specific site vulnerabilities, but current and evolving threats may best be determined by others in the intelligence or law enforcement communities. A number of resources have been identified in the standard, but many others exist and asset owners are not limited to where they may turn for assistance. Additional resources may include state or local fusion centers, U.S. Department of Homeland Security, Federal Bureau of Investigations (FBI), Public Safety Canada, Royal Canadian Mounted Police, and InfraGard chapters coordinated by the FBI.

The Responsible Entity is required to take a number of factors into account in Parts 4.1 to 4.3 in order to make a risk-based evaluation under Requirement R4.

To assist in determining the current threat for a facility, the prior history of attacks on similarly protected facilities should be considered when assessing probability and likelihood of occurrence at the facility in question.

Resources that may be useful in conducting threat and vulnerability assessments include:

- NERC Security Guideline for the Electricity Sector: Physical Security.
- NERC Security Guideline: Physical Security Response.
- ASIS International General Risk Assessment Guidelines.
- ASIS International Facilities Physical Security Measure Guideline.
- ASIS International Security Management Standard: Physical Asset Protection.
- Whole Building Design Guide – Threat/Vulnerability Assessments.

Requirement R5

This requirement specifies development and implementation of a security plan(s) designed to protect against attacks to the facilities identified in Requirement R1 based on the assessment performed under Requirement R4.

Requirement R5 specifies the following attributes for the physical security plan:

- *Resiliency or security measures designed collectively to deter, detect, delay, assess, communicate, and respond to potential physical threats and vulnerabilities identified during the evaluation conducted in Requirement R4.*

  Resiliency may include, among other things:

  a. System topology changes,

  b. Spare equipment,

  c. Construction of a new Transmission station or Transmission substation.

  While most security measures will work together to collectively harden the entire site, some may be allocated to protect specific critical components. For example, if protection from gunfire is considered necessary, the entity may only install ballistic protection for critical components, not the entire site.

- *Law enforcement contact and coordination information.*

  Examples of such information may be posting 9-1-1 for emergency calls and providing substation safety and familiarization training for local and federal law enforcement, fire department, and Emergency Medical Services.

- *A timeline for executing the physical security enhancements and modifications specified in the physical security plan.*

  Entities have the flexibility to prioritize the implementation of the various resiliency or security enhancements and modifications in their security plan according to risk, resources, or other factors. The requirement to include a timeline in the physical security plan for executing the actual physical security enhancements and modifications does not also require that the enhancements and modifications be completed within 120 days. The actual timeline may extend beyond the 120 days, depending on the amount of work to be completed.

- *Provisions to evaluate evolving physical threats, and their corresponding security measures, to the*Applicable Transmission station(s), or Transmission substation(s), *or primary control center(s).* are those that meet any of the following criteria:

1. Transmission Facilities operated at 500 kV or higher. For the purpose of this criterion, the collector bus for a generation plant is not considered a Transmission Facility, but is part of the generation interconnection Facility.

2. Transmission Facilities that are operating between 200 kV and 499 kV at a single station or substation, where the station or substation is connected at 200 kV or higher voltages to three or more other Transmission stations or substations and has an "aggregate weighted value" exceeding 3000 according to the table below. The "aggregate weighted value" for a

single station or substation is determined by summing the "weight value per line" shown in the table below for each incoming and each outgoing BES Transmission Line that is connected to another Transmission station or substation. For the purpose of this criterion, the collector bus for a generation plant is not considered a Transmission Facility, but is part of the generation interconnection Facility.

A registered entity's physical security plan should include processes and responsibilities for obtaining and handling alerts, intelligence, and threat warnings from various sources. Some of these sources could include the ERO, ES-ISAC, and US and/or Canadian federal agencies. This information should be used to reevaluate or consider changes in the security plan and corresponding security measures of the security plan found in R5.

Incremental changes made to the physical security plan prior to the next required third party review do not require additional third party reviews.

Voltage Value of a Line	Weight Value per Line
less than 200 kV (not applicable)	(not applicable)
200 kV to 299 kV	700
300 kV to 499 kV	1300
500 kV and above	N/A

Requirement R6

This requirement specifies review by an entity other than the Transmission Owner or Transmission Operator with appropriate expertise for the evaluation performed according to Requirement R4 and the security plan(s) developed according to Requirement R5. As with Requirement R2, the term unaffiliated means that the selected third party reviewer cannot be a corporate affiliate (*i.e.*, the third party reviewer cannot be an entity that corporately controls, is controlled by or is under common control with, the Transmission Operator). A third party reviewer also cannot be a division of the Transmission Operator that operates as a functional unit.

As noted in the guidance for Requirement R2, the prohibition on registered entities using a corporate affiliate to conduct the review, however, does not prohibit a governmental entity from selecting as the third party reviewer another governmental entity within the same political subdivision. For instance, a city or municipality may use its local enforcement agency, so long as the local law enforcement agency satisfies the criteria in Requirement R6. The third party reviewer, however, must still be a third party and cannot be a division of the registered entity that operates as a functional unit.

The Responsible Entity can select from several possible entities to perform the review:

- *An entity or organization with electric industry physical security experience and whose review staff has at least one member who holds either a Certified Protection Professional (CPP) or Physical Security Professional (PSP) certification.*

  In selecting CPP and PSP for use in this standard, the SDT believed it was important that if a private entity such as a consulting or security firm was engaged to conduct the third party review, they must tangibly demonstrate competence to conduct the review. This includes electric industry physical security experience and either of the premier security industry certifications sponsored by ASIS International. The ASIS certification program was initiated in 1977, and those that hold the CPP certification are board certified in security management. Those that hold the PSP certification are board certified in physical security.

- *An entity or organization approved by the ERO.*

- *A governmental agency with physical security expertise.*

- *An entity or organization with demonstrated law enforcement, government, or military physical security expertise.*

As with the verification under Requirement R2, Requirement R6 provides that the "review may occur concurrently with or after completion of the evaluation performed under Requirement R4 and the security plan development under Requirement R5." This provision is designed to provide applicable Transmission Owners and Transmission Operators the flexibility to work with the third party reviewer throughout (*i.e.*, concurrent with) the evaluation performed according to Requirement R4 and the security plan(s) developed according to Requirement R5, which for some Responsible Entities may be more efficient and effective. In other words, a Transmission Owner or Transmission Operator could collaborate with their unaffiliated third party reviewer to perform an evaluation of potential threats and vulnerabilities (Requirement R4) and develop a security plan (Requirement R5) to satisfy Requirements R4 through R6 simultaneously. The intent of Requirement R6 is to have an entity other than the owner or operator of the facility to be involved in the Requirement R4 evaluation and the development of the Requirement R5 security plans and have an opportunity to provide input on the evaluation and the security plan. Accordingly, Requirement R6 is designed to allow entities the discretion to have a two-step process, where the Transmission Owner performs the evaluation and develops the security plan itself and then has a third party review that assessment, or a one-step process, where the entity collaborates with a third party to perform the evaluation and develop the security plan.

~~Timeline~~

(Deleted graphics)-014-1 – Physical Security Process Flow

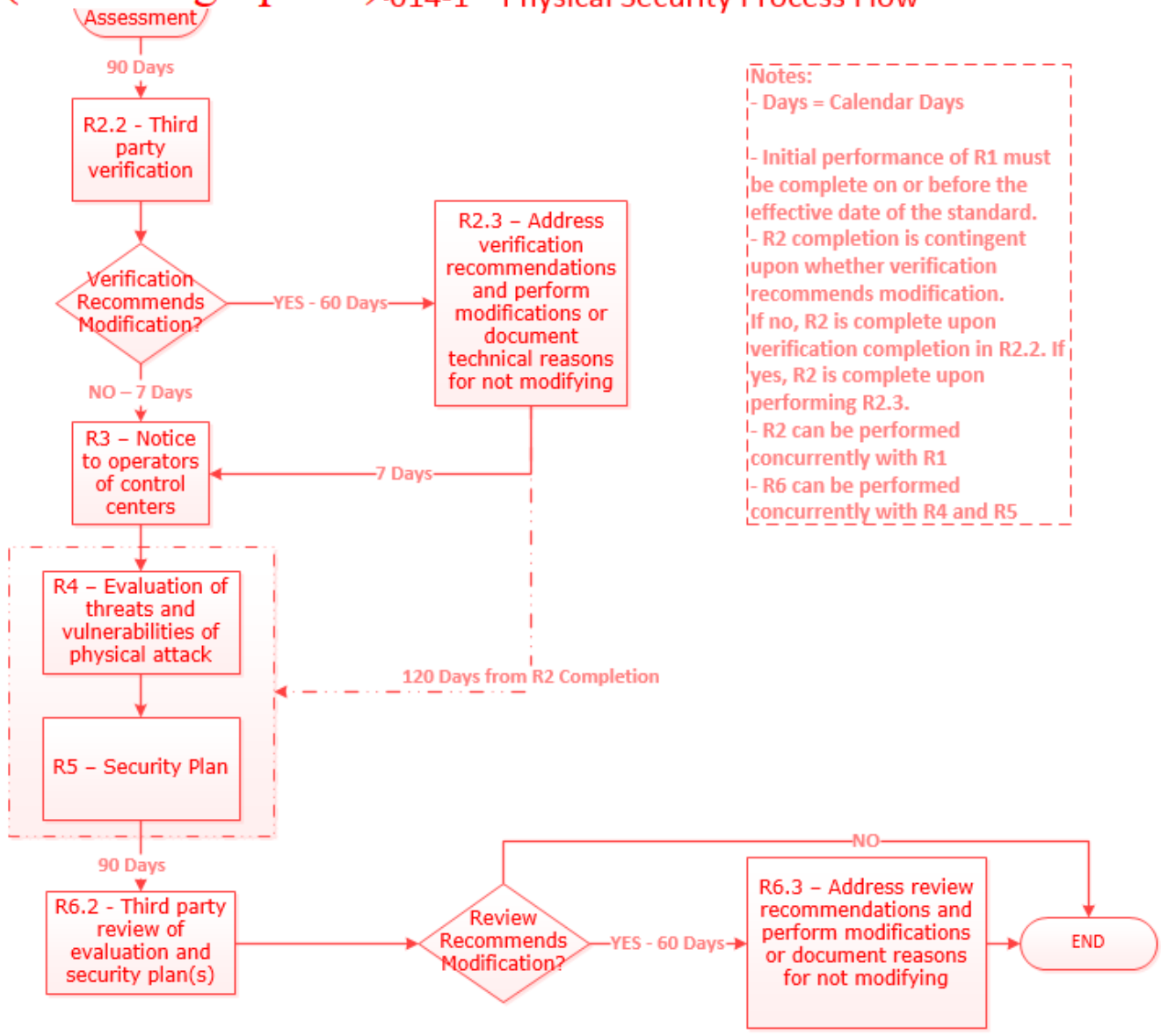

Rationale

During development of this standard, text boxes were embedded within the standard to explain the rationale for various parts of the standard. Upon BOT approval, the text from the rationale text boxes was moved to this section.

Rationale for Requirement R1:
This requirement meets the FERC directive from paragraph 6 of its March 7, 2014 order on physical security to perform a risk assessment to identify which facilities if rendered inoperable or damaged could impact an Interconnection through instability, uncontrolled separation, or cascading failures. The requirement is not intended to bring within the scope of the standard a Transmission station or Transmission substation unless the applicable Transmission Owner determines through technical studies and analyses based on objective analysis, technical expertise, operating experience and experienced judgment that the loss of such facility would have a critical impact on the operation of the Interconnection in the event the asset is rendered inoperable or damaged. In the November 20, 2014 Order, FERC reiterated that "only an instability that has a "critical impact on the operation of the interconnection" warrants finding that the facility causing the instability is critical under Requirement R1." The Transmission Owner may determine the criteria for critical impact by considering, among other criteria, any of the following:

- Criteria or methodology used by Transmission Planners or Planning Coordinators in TPL-001-4, Requirement R6
- NERC EOP-004-2 reporting criteria
- Area or magnitude of potential impact

Requirement R1 also meets the FERC directive for periodic reevaluation of the risk assessment by requiring the risk assessment to be performed every 30 months (or 60 months for an entity that has not identified in a previous risk assessment any Transmission stations or Transmission substations that if rendered inoperable or damaged could result in instability, uncontrolled separation, or Cascading within an Interconnection).

After identifying each Transmission station and Transmission substation that meets the criteria in Requirement R1, it is important to additionally identify the primary control center that operationally controls that Transmission station or Transmission substation (*i.e.*, the control center whose electronic actions can cause direct physical actions at the identified Transmission station and Transmission substation, such as opening a breaker, compared to a control center that only has the ability to monitor the Transmission station and Transmission substation and, therefore, must coordinate direct physical action through another entity).

Rationale for Requirement R2:
This requirement meets the FERC directive from paragraph 11 in the order on physical security requiring verification by an entity other than the owner or operator of the risk assessment performed under Requirement R1.

This requirement provides the flexibility for a Transmission Owner to select registered and non-registered entities with transmission planning or analysis experience to perform the verification of the Requirement R1 risk assessment. The term "unaffiliated" means that the selected verifying entity cannot be a corporate affiliate (*i.e.*, the verifying entity cannot be an entity that controls, is controlled by, or is under common control with, the Transmission owner). The verifying entity also cannot be a division of the Transmission Owner that operates as a functional unit. The term "unaffiliated" is not intended to prohibit a governmental entity from using another government entity to be a verifier under Requirement R2.

Requirement R2 also provides the Transmission Owner the flexibility to work with the verifying entity throughout the Requirement R1 risk assessment, which for some Transmission Owners may be more efficient and effective. In other words, a Transmission Owner could coordinate with their unaffiliated verifying entity to perform a Requirement R1 risk assessment to satisfy both Requirement R1 and Requirement R2 concurrently.

Planning Coordinator is a functional entity listed in Part 2.1. The Planning Coordinator and Planning Authority are the same entity as shown in the NERC Glossary of Terms Used in NERC Reliability Standards.

Rationale for Requirement R3:

Some Transmission Operators will have obligations under this standard for certain primary control centers. Those obligations, however, are contingent upon a Transmission Owner first identifying which Transmission stations and Transmission substations meet the criteria specified by Requirement R1, as verified according to Requirement R2. This requirement is intended to ensure that a Transmission Operator that has operational control of a primary control center identified in Requirement R1, Part 1.2 of a Transmission station or Transmission substation verified according to Requirement R2 receives notice of such identification so that the Transmission Operator may timely fulfill its resulting obligations under Requirements R4 through R6. Since the timing obligations in Requirements R4 through R6 are based upon completion of Requirement R2, the Transmission Owner must also include notice of the date of completion of Requirement R2. Similarly, the Transmission Owner must notify the Transmission Operator of any removals from identification that result from a subsequent risk assessment under Requirement R1 or the verification process under Requirement R2.

Rationale for Requirement R4:

This requirement meets the FERC directive from paragraph 8 in the order on physical security that the reliability standard must require tailored evaluation of potential threats and vulnerabilities to facilities identified in Requirement R1 and verified according to Requirement R2. Threats and vulnerabilities may vary from facility to facility based on factors such as the facility's location, size, function, existing protections, and attractiveness of the target. As such, the requirement does not mandate a one-size-fits-all approach but requires entities to account for the unique characteristics of their facilities.

~~Requirement R4 does not explicitly state when the evaluation of threats and vulnerabilities must occur or be completed. However, Requirement R5 requires that the entity's security plan(s), which is dependent on the Requirement R4 evaluation, must be completed within 120 calendar days following completion of Requirement R2. Thus, an entity has the flexibility when to complete the Requirement R4 evaluation, provided that it is completed in time to comply with the requirement in Requirement R5 to develop a physical security plan 120 calendar days following completion of Requirement R2.~~

~~**Rationale for Requirement R5:**~~
~~This requirement meets the FERC directive from paragraph 9 in the order on physical security requiring the development and implementation of a security plan(s) designed to protect against attacks to the facilities identified in Requirement R1 based on the assessment performed under Requirement R4.~~

~~**Rationale for Requirement R6:**~~
~~This requirement meets the FERC directive from paragraph 11 in the order on physical security requiring review by an entity other than the owner or operator with appropriate expertise of the evaluation performed according to Requirement R4 and the security plan(s) developed according to Requirement R5.~~

~~As with the verification required by Requirement R2, Requirement R6 provides Transmission Owners and Transmission Operators the flexibility to work with the third party reviewer throughout the Requirement R4 evaluation and the development of the Requirement R5 security plan(s). This would allow entities to satisfy their obligations under Requirement R6 concurrent with the satisfaction of their obligations under Requirements R4 and R5.~~

~~**3.** Transmission Facilities at a single station or substation location that are identified by its Reliability Coordinator, Planning Coordinator, or Transmission Planner as critical to the derivation of Interconnection Reliability Operating Limits (IROLs) and their associated contingencies.~~

~~**4.** Transmission Facilities identified as essential to meeting Nuclear Plant Interface Requirements (NPIRs).~~

Attachment 1 – Applicability Criteria

Applicable Transmission station(s) or Transmission substation(s) are those that meet any of the following criteria:

1. Transmission Facilities operated at 500 kV or higher. For the purpose of this criterion, the collector bus for a generation plant is not considered a Transmission Facility, but is part of the generation interconnection Facility.

2. Transmission Facilities that are operating between 200 kV and 499 kV at a single station or substation, where the station or substation is connected at 200 kV or higher voltages to three or more other Transmission stations or substations and has an "aggregate weighted value" exceeding 3,000 according to the table below. The "aggregate weighted value" for a single station or substation is determined by summing the "weight value per line" shown in the table below for each incoming and each outgoing Bulk Electric System Transmission Line that is connected to another Transmission station or substation. For the purpose of this criterion, the collector bus for a generation plant is not considered a Transmission Facility, but is part of the generation interconnection Facility.

Voltage Value of a Line	Weight Value per Line
less than 200 kV (not applicable)	(not applicable)
200 kV to 299 kV	700
300 kV to 499 kV	1,300
500 kV and above	N/A

3. Transmission Facilities at a single station or substation location that are identified by their Reliability Coordinator, Planning Coordinator, or Transmission Planner as critical to the derivation of Interconnection Reliability Operating Limits (IROLs) and their associated contingencies.

4. Transmission Facilities identified as essential to meeting Nuclear Plant Interface Requirements (NPIRs).

Exhibit B

Implementation Plan

NERC
NORTH AMERICAN ELECTRIC RELIABILITY CORPORATION

Implementation Plan

Project 2023-06 CIP-014 Risk Assessment Refinement
Reliability Standard CIP-014-4

Applicable Standard(s)

- CIP-014-4 Physical Security

Requested Retirement(s)

- CIP-014-3 Physical Security

Applicable Entities

- Transmission Owner that owns or jointly owns one or more Transmission stations or Transmission substations that meet the applicability criteria of Attachment 1.
- Transmission Operator

  Exemption: Facilities in a "protected area," as defined in 10 C.F.R. § 73.2, within the scope of a security plan approved or accepted by the Nuclear Regulatory Commission are not subject to this Standard; or Facilities within the scope of a security plan approved or accepted by the Canadian Nuclear Safety Commission are not subject to this Reliability Standard.

General Considerations

In developing this Implementation Plan, the Drafting Team (DT) has determined that 24 calendar months for the CIP-014-4 implementation plan would allow adequate time for Transmission Owners and Transmission Operators to determine applicability, develop criteria, write or revise methodologies, perform assessments, and procure unaffiliated third parties for risk assessment verification (which some Transmission Owners have performed concurrently with their risk assessment analyses).

In determining an appropriate time frame, the DT considered: (1) the severity of the concerns highlighted in the FERC December 2022 order,[1] which directed NERC to evaluate the effectiveness of CIP-014-3 in mitigating the risks to the bulk power system associated with physical attacks; (2) the recommendations of the NERC report entitled Evaluation of the Physical Security Reliability Standard and Physical Security Attacks to the Bulk-Power System;[2] and (3) the Standard Authorization Request requirement that the DT correct any discrepancies between the study period, frequency of study, and the base case(s) a Transmission Owner uses. The DT determined that an Implementation Plan schedule of 24 calendar months appropriately balances the reliability

[1] *N. Am. Elec. Reliability Corp.*, 181 FERC ¶ 61,230 (2022).
[2] *See* NERC Report on CIP-014-3.pdf, filed with FERC on April 14, 2023).

need and risks against the time and resources required of entities to determine applicability, develop criteria, write or revise methodologies, perform assessments, and procure unaffiliated third parties for risk assessment verification.

Effective Date of CIP-014-4

Where approval by an applicable governmental authority (AGA) is required, Reliability Standard CIP-014-4 shall become effective on the first day of the first calendar quarter that is 24 calendar months after the effective date of the AGA's order approving the standard or as otherwise provided for by the AGA.

Where approval by an AGA is not required, Reliability Standard CIP-014-4 shall become effective on the first day of the first calendar quarter that is 24 calendar months after the date the standard is adopted by the NERC Board of Trustees or as otherwise provided for in that jurisdiction.

Initial Performance of Periodic Requirements

The initial risk assessment required by Reliability Standard CIP-014-4 Requirement R5, must be completed on or before the effective date of the standard. Subsequent risk assessments shall be performed no later than 36 calendar months following the effective date of Reliability Standard CIP-014-4.

Retirement Date

Reliability Standard CIP-014-3 shall be retired immediately prior to the effective date of Reliability Standard CIP-014-4 in the particular jurisdiction in which the revised standard is becoming effective.

Exhibit C

Technical Rationale

NERC
NORTH AMERICAN ELECTRIC RELIABILITY CORPORATION

Technical Rationale

Project 2023-06 CIP-014 Risk Assessment Refinement
Reliability Standard CIP-014-4 | May 2026

CIP-014-4 – Physical Security

In performing the risk assessment, the Transmission Owner (TO) should first identify their population of Transmission stations and Transmission substations that meet the criteria contained in Attachment 1. The Standard requires the TO to perform a risk assessment, consisting of transmission analyses to determine which of those Transmission stations and Transmission substations, if rendered inoperable or damaged, could result in instability, uncontrolled separation, or Cascading within an Interconnection.

The purpose of Reliability Standard CIP-014 is to protect Transmission stations and Transmission substations, and their associated primary control centers, that if rendered inoperable or damaged, due to a physical attack, could cause instability, uncontrolled separation, or Cascading within an Interconnection. To properly identify candidates for such Transmission station(s) and Transmission substation(s), the TO shall evaluate the criteria listed in Attachment 1.

Rationale for Requirement R1

The Standard Authorization Request (SAR) directed the drafting team (DT) to clarify the in-service window. It also directed the DT to correct any discrepancies between the study period, frequency of study, and the base case(s) a TO uses. In the previous version of CIP-014, the 30-month time frame and the 24-month planned-to-be-in-service date could, if not carefully applied, lead to gaps between models and study horizons. Per the SAR, CIP-014-4 has consolidated these multiple timelines into one.

Requirement R1 is revised to ensure that each TO establishes a list of applicable Transmission station(s) or Transmission substation(s) in accordance with Attachment 1. Aligning the 36 calendar months look ahead in Requirement R1 with the 36 calendar months risk assessment cycle ensures that system topology of the cases used to assess applicability is consistent with the system topology in the risk assessment models.

TOs shall review and, if necessary, update the list of applicable Transmission station(s) or Transmission substation(s) per Attachment 1 at least once every 36 calendar months. The list of applicable Transmission station(s) or Transmission substation(s) shall include existing Facilities and Transmission station(s) and Transmission substation(s) planned to be in service within 36 calendar months. The 36 calendar months risk assessment study cycle aligns with the 36 calendar months planned-to-be-in-service date. "Planned to be in-service" should be taken to mean all Transmission station(s) and Transmission substation(s) as modeled in the base cases.

Rationale for Requirement R2

The distance chosen in Requirement R2 is based on guidelines that considered a variety of plausible attack scenarios capable of rendering a substation inoperable.

The DT chose 1,500 feet or 457 meters (the shortest distance, measured substation fence line to substation fence line) in Requirement R2 after review of the Department of Homeland Security (DHS)-Department of Justice (DOJ) Bomb Threat Stand-Off Card. The Bomb Threat Stand-Off Card is a quick reference guide providing recommended evacuation and shelter-in-place distances for various types and sizes of Improvised Explosive Devices (IED), based on version of August 2025.[1]

The guidance above allowed the DT to draft language that clarified what study scenario(s) and other study assumptions are appropriate and reasonable considering the intent of CIP-014 and the potential range of issues during a physical attack. Simulations should incorporate the loss of station elements without the reliance on local system protection. Clarifying how to account for adjacent Transmission stations or Transmission substations of differing ownership as well as for those Transmission stations or Transmission substations within line-of-sight to each other. These provide limits to what the TO must study and avoid including an explicit representation of the physical event in the standard.

Accurate simulation of the event was deemed a priority of the DT. The DT felt that ownership of proximate substations, as identified in Requirement R2, was irrelevant to Bulk Electric System impact.

The Transmission station(s) or Transmission substation(s) identified in Requirement R2 are only intended for use in the Requirement R5 risk assessment and the Requirement R6 third-party verification to properly account for additional equipment that, if also damaged during an event, could lead to loss of additional Facilities. They are not intended to be subject to Requirements R7 through R10. Requirements R7 through R10 are only relevant for the Transmission station(s) or Transmission substation(s) identified in Requirement R1.

Rationale for Requirement R3

The new Requirement R3 fulfills the first item in the SAR to "clarify the risk assessment methods" and that the "methods should account for dynamic studies." Requirement R3 also fulfills other items in the SAR around case selection, technically supported rationales, the loss of communications, and local protection within the affected station. The previous Requirement R3 is now Requirement R7 of CIP-014-4.

Per Requirement R3, each TO is required to have a risk assessment methodology, including the criteria by which analytical results will be examined to identify Transmission station(s) or Transmission substation(s) that if rendered inoperable or damaged as a result of a physical attack could result in instability, uncontrolled separation, or Cascading within an Interconnection. The TO is not required to develop its own methodology and is free to use a methodology developed elsewhere, such as in coordination with neighboring TOs or Independent System Operators (ISOs).

Rationale for Requirement R3, Part 3.1

TOs should determine the amount of unacceptable load loss and generation loss within an Interconnection when determining the impact of an event to the Transmission system. The thresholds

[1] https://www.cisa.gov/resources-tools/resources/dhs-doj-bomb-threat-stand-card

identifying unacceptable generation and load losses should be the total of the losses within the TO's footprint and losses external to the TO's footprint. Criteria for measures such as load loss or generation loss should consider the impact to the Interconnection.

While the use of Recommended Interconnection Resource Loss Protection Criteria (RLPC) provides one approach to generation loss—setting these thresholds based on the two largest potential resource losses in an Interconnection as detailed in Attachment A of NERC Reliability Standard BAL-003-2—other methods may also be appropriate, as determined by the TO. The RLPC values should be taken from the latest approved version of NERC's annual 'Frequency Response Annual Analysis' report.

Use of the RLPC recommendations in accordance with the latest version of NERC's 'Frequency Response Annual Analysis' report is an example of technically justified thresholds for unacceptable generation and load loss within an Interconnection. Use of lower values than the RLPC recommendations is also technically justifiable. Use of higher values than the RLPC recommendations would require additional technical justification.

Large loss of generation or load due to the evaluated disturbance could result in severe System impacts. The documented risk assessment methodology shall include the amount of unacceptable load loss and generation loss, that could result in instability, uncontrolled separation, or Cascading within an Interconnection. Conditions and thresholds used for determining critical Transmission station(s) or Transmission substation(s), i.e., those that if rendered inoperable or damaged as a result of a physical attack could result in instability, uncontrolled separation, or Cascading within an Interconnection, should be part of the documented risk assessment methodology.

It is up to the TO to identify post-event measures that can be used to assess the criticality of a Transmission station or Transmission substation. Suggested measures are listed below. A TO can decide that one or more of the items are not applicable to their location within the interconnection and if any additional items should be included.

The following parameters can be used to evaluate the steady-state and/or dynamic analysis:

- Steady state voltages
- Transient voltage response
- Thermal loading of Facilities
- Relay loadability
- Rotor angle stability
- Frequency exceeding generator limits
- Frequency stability
- Acceptable damping of oscillations
- Cascading line tripping

- Steady-state voltage stability

Rationale for Requirement R3, Part 3.2
The performance of both steady state and dynamics simulations is required for all applicable Transmission station(s) and substation(s). Dynamic simulations are required by the standard because exclusively performing steady-state simulations is insufficient for determining whether the loss of a Transmission station or Transmission substation could result in instability, uncontrolled separation, or Cascading within an Interconnection.

Rationale for Requirement R3, Part 3.3
Historically, simulation of a three-phase Fault at applicable Transmission station(s) and Transmission substation(s) appears to be the prevalent assumption used by the majority of TOs in the performance of stability analyses for CIP-014 risk assessments. The DT has determined, however, that there may be specific locations or scenarios that merit the use of a different Fault type (or a sequence or progression of multiple Faults) more consistent with the occurrence of a physical attack for those locations or scenarios.

Rationale for Requirement R3, Part 3.3.1
The applicable Transmission substation or Transmission station is the station that is assumed to be under attack for the purposes of this standard. Any damage to Transmission stations or Transmission substations in proximity is assumed to be collateral damage. The intent of CIP-014 is to cover the case when the applicable Transmission station or Transmission substation becomes inoperable. The SAR refers to the "total loss of communication and protection equipment at the substation." Requirement R3, Part 3.3.1 uses the "prior loss" wording to eliminate difficulties when performing simulations. When exploring possible attack scenarios, it is possible to develop scenarios that allow a fault prior to the loss of communication and protection systems. Protection systems typically operate within a few cycles, so a short delay between the fault and the loss of the protection system could allow breakers to operate. "Prior loss of communication and Protection Systems" eliminates this possibility, so the fault should be studied without the availability of local communications or Protection Systems. The use of delayed clearing times, typically Zone 2, is necessary because the applicable substation has lost local protection and all communications with other substations.

Rationale for Requirement R3, Part 3.3.2
The relative locations of the applicable Transmission station or Transmission substation and the neighboring substation will determine the best way to evaluate and study the combinations of substations. Every substation identified in Requirement R2 must be studied in at least one combination with its applicable Transmission station or Transmission substation. For example, if there is a single neighboring substation near the applicable substation, then the applicable and neighboring substation should be studied together. If there are two or more neighboring substations that are close together and both within 1,500 feet of the applicable substation, then the responsible entity may study the applicable substation with the combination of the two neighbors. If there are two or more neighboring substations on different sides of the applicable substation, then it can make more sense to study the applicable substation with each proximity substation individually. For purposes of the simulations, the faults should be applied at the same time or after the faults applied to the applicable Transmission station or

Transmission substation depending on the simulated event and any restrictions of the simulation software. Not all software packages allow for multiple simultaneous faults. The protection and communication systems at the proximate substations are expected to operate normally, so delayed clearing is not necessary.

Rationale for Requirement R3, Part 3.3.3
The DT believes that requiring documented justification for Faults being selected, without specifying Fault type, allows TOs to determine on a location-by-location basis what is a credible high-severity scenario for a physical attack and furthermore how to appropriately model the associated stability simulations. The DT also believes that a single justification may be used for multiple locations. Requirement 3 Part 3.3.3 allows the TOs to determine the type of fault with documented justification. If a fault type and justification is relevant to multiple Transmission stations or Transmission substations, there is no need to repeatedly document the same justification.

Rationale for Requirement R3, Part 3.3.4
Each simulation should include the removal of all Elements that Protection Systems and other controls are expected to automatically disconnect for the event. After the prior loss of communication and Protection Systems at the applicable Transmission station or Transmission substation, other Protection Systems should operate as expected for the event considered. The accurate simulation of Protection System actions is essential for correctly identifying the risk of instability, uncontrolled separation, or Cascading within an Interconnection.

Rationale for Requirement R3, Part 3.3.5
While there are commonly used generic clearing times for remote clearing that are consistent across the industry, actual clearing times can be shorter or longer depending on conditions and design considerations at an individual TO. The difference of a few cycles can have a significant impact on the transient behavior of generating units, therefore, it is required that the risk analysis use actual or more conservative clearing times.

Rationale for Requirement R4
Joint ownership of Transmission substations and Transmission stations was discussed in the Guidelines and Technical Basis of previous versions of the CIP-014-3 standard, but because ownership was not addressed in the standard language, the CIP-014-4 Risk Assessment Refinement SAR required clarification which resulted in the new requirement R4. TOs that have applicable jointly owned Transmission substations and Transmission stations should coordinate and document their individual and joint responsibilities for CIP-014-4 Requirements R3 and R5. TOs should be able to demonstrate sole or joint ownership through one-line diagrams with ownership demarcations and/or a letter of attestation stating which stations are solely or jointly owned.

Rationale for Requirement R5
An objective of the CIP-014-3 Risk Assessment Refinement SAR was to align study periods, frequency of studies, and the powerflow models used for the studies. A 36-month periodicity was chosen for the Requirement R5 risk assessment to reduce the periodicity options from previous versions of the standard.

Additionally, a single study periodicity is more easily aligned with project in-service date considerations and model choices. As called for in Project Scope item 3 of the CIP-014-3 Risk Assessment Refinement SAR, the risk assessment must comply with the methodology developed in Requirement R3, so this language was explicitly added to Requirement R5.

TOs shall review and, if necessary, update the list of applicable Transmission station(s) or Transmission substation(s) per Attachment 1 at least once every 36 months. The list of applicable Transmission station(s) and Transmission substation(s) shall include existing or planned to be in service within 36 months Transmission station(s) and Transmission substation(s). The 36-month cycle for updating the list of applicable Transmission station(s) or Transmission substation(s) per Attachment 1 aligns with the annual cycle for performing Planning Assessments per NERC Standard TPL-001. The 36-month risk assessment study cycle aligns with the 36-month planned-to-be-in-service date.

In addition to the performance of the risk assessment using Transmission station(s) and Transmission substation(s) identified in Requirement R1, any proximate Transmission station(s) and Transmission substation(s) identified in Requirement R2 should also be included in the risk assessment. Furthermore, any Transmission station(s) and Transmission substation(s) assessed due to having been identified per Requirement R1 should also be run as part of a proximate Transmission station(s) and Transmission substation(s) group per Requirement R2 if such an identification is made.

Rationale for Requirement R5, Part 5.1
If a TO performs a steady state analysis and identifies a Transmission station or substation that, if rendered inoperable or damaged, could result in instability, uncontrolled separation, or Cascading within an Interconnection, then dynamic analysis is not required for that Transmission station or substation. If a TO performs a dynamic analysis and identifies a Transmission station or substation that, if rendered inoperable or damaged, could result in instability, uncontrolled separation, or Cascading within an Interconnection, then steady state analysis is not required for that Transmission station or substation.

Rationale for Requirement R5, Part 5.2
The intent of this Requirement is that TOs do not have to reassess already identified and protected Transmission stations or substations (Requirement R5 Part 5.3 and Requirements R7 through R10 still apply to those Transmission stations or substations). A new risk assessment will need to be performed if the TO wishes to determine whether or not a Transmission station or substation can be removed from identification and protection as outlined in Requirement R7 Part 7.1.

Rationale for Requirement R5, Part 5.3
Identification of Primary Control Centers: After completing the risk assessment under Requirement R5 and verified under Requirement R6, it is important to additionally identify the primary control center that operationally controls each Transmission station or Transmission substation, that if rendered inoperable or damaged could result in instability, uncontrolled separation, or Cascading within an Interconnection. A primary control center “operationally controls” a Transmission station or Transmission substation when the control center’s electronic actions can cause direct physical actions at the identified Transmission station and Transmission substation, such as opening a breaker.

Rationale for Implementation Plan

In developing the Implementation Plan, the DT has determined that 24 calendar months for the CIP-014-4 implementation plan would allow adequate time for TOs and Transmission Operators (TOPs) to determine applicability, develop criteria, write or revise methodologies, perform assessments, and procure unaffiliated third parties for risk assessment verification (which some TOs have performed concurrently with their risk assessment analyses.

Furthermore, given a) FERC's sense of urgency stated in their December 2022 order,[2] which directed NERC to evaluate the effectiveness of CIP-014-3 in mitigating the risks to the bulk power system associated with physical attacks, b) the findings of NERC's report to FERC on April 14, 2023 (Evaluation of the Physical Security Reliability Standard and Physical Security Attacks to the Bulk-Power System)[3], and c) the designation of Project 2023-06 as High Priority, the DT has determined that an Implementation Plan schedule of greater than 24 calendar months would not be responsive to the risks identified with sufficient urgency, and thus 24 calendar months is an appropriate timeframe. While the DT understands the time and resources required of entities to respond to this Implementation Plan, the DT believes that 24 calendar months properly balances the need to address the reliability risk and the time needed by entities to determine applicability, develop criteria, write or revise methodologies, perform assessments, and procure unaffiliated third parties for risk assessment verification.

CIP-014-4 Flowchart

The flowchart is a concise outline that guides through the steps for completing the risk assessment at least once every 36 calendar months, based on the Applicability in Attachment 1 and Requirements R1-R5.

[2] *N. Am. Elec. Reliability Corp.*, 181 FERC ¶ 61,230 (2022).

[3] *See* NERC Report on CIP-014-3.pdf, filed with FERC on April 14, 2023).

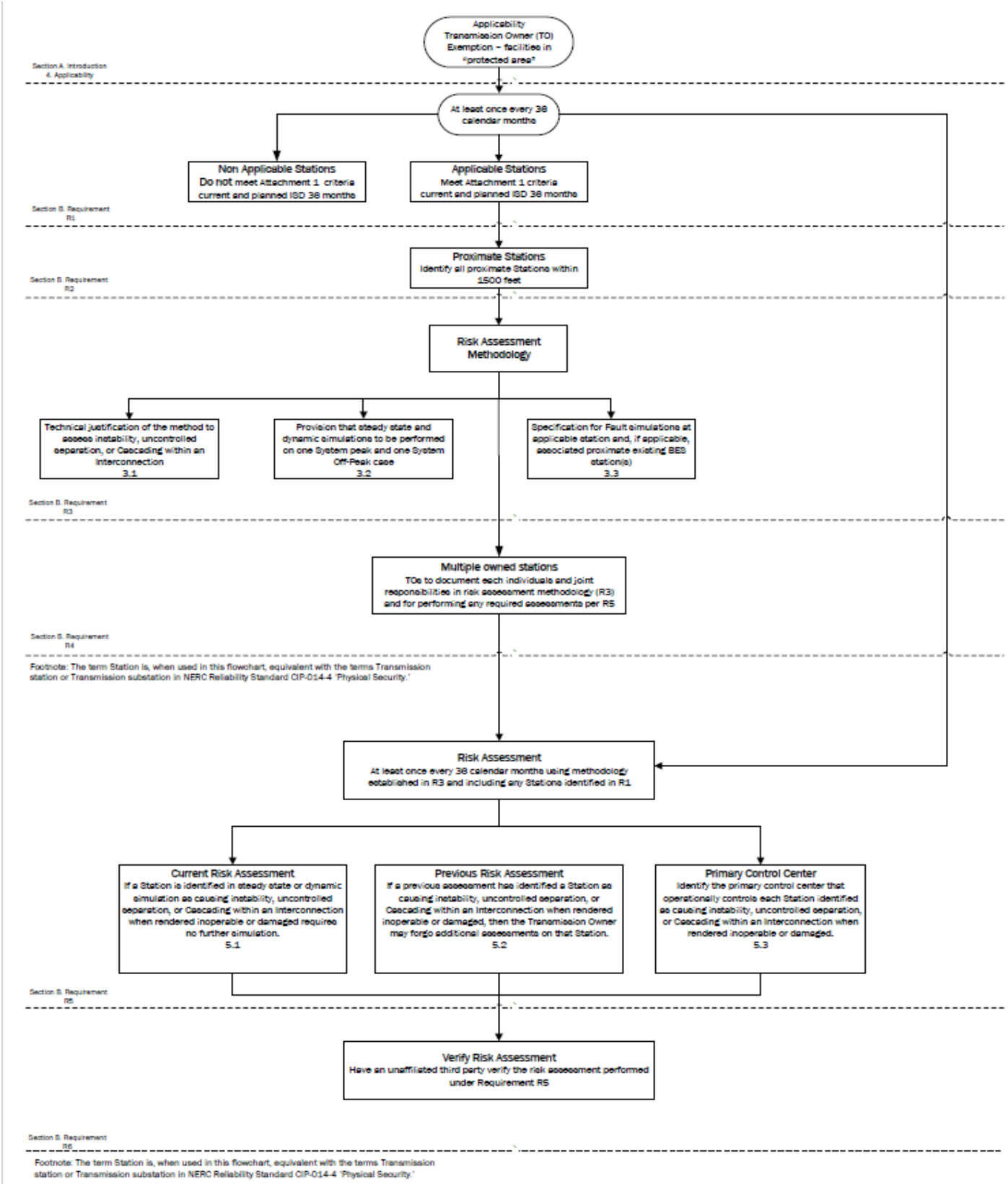
Applicability
Transmission Owner (TO) Exemption – facilities in "protected area"
Section A. Introduction 4. Applicability
At least once every 38 calendar months
Non Applicable Stations
Do not meet Attachment 1 criteria current and planned ISD 38 months
Applicable Stations
Meet Attachment 1 criteria current and planned ISD 38 months
Section B. Requirement R1
Proximate Stations
Identify all proximate Stations within 1500 feet
Section B. Requirement R2
Risk Assessment Methodology
Technical justification of the method to assess instability, uncontrolled separation, or Cascading within an Interconnection 3.1
Provision that steady state and dynamic simulations to be performed on one System peak and one System Off-Peak case 3.2
Specification for Fault simulations at applicable station and, if applicable, associated proximate existing BES station(s) 3.3
Section B. Requirement R3
Multiple owned stations
TOs to document each individuals and joint responsibilities in risk assessment methodology (R3) and for performing any required assessments per R5
Section B. Requirement R4
Footnote: The term Station is, when used in this flowchart, equivalent with the terms Transmission station or Transmission substation in NERC Reliability Standard CIP-014-4 'Physical Security.'
Risk Assessment
At least once every 38 calendar months using methodology established in R3 and including any Stations identified in R1
Current Risk Assessment
If a Station is identified in steady state or dynamic simulation as causing instability, uncontrolled separation, or Cascading within an Interconnection when rendered inoperable or damaged requires no further simulation. 5.1
Previous Risk Assessment
If a previous assessment has identified a Station as causing instability, uncontrolled separation, or Cascading within an Interconnection when rendered inoperable or damaged, then the Transmission Owner may forgo additional assessments on that Station. 5.2
Primary Control Center
Identify the primary control center that operationally controls each Station identified as causing instability, uncontrolled separation, or Cascading within an Interconnection when rendered inoperable or damaged. 5.3
Section B. Requirement R5
Verify Risk Assessment
Have an unaffiliated third party verify the risk assessment performed under Requirement R5
Section B. Requirement R6
Footnote: The term Station is, when used in this flowchart, equivalent with the terms Transmission station or Transmission substation in NERC Reliability Standard CIP-014-4 'Physical Security.'

Technical Rationale for Reliability Standard CIP-014-3

This section contains a "cut and paste" of the former Guidelines and Technical Basis (GTB) as-is of from CIP-014-3 standard to preserve any historical references. No modifications have been made.

Requirement R2 (This is Requirement R6 in CIP-014-4)
This requirement specifies verification of the risk assessment performed under Requirement R1 by an entity other than the owner or operator of the Requirement R1 risk assessment.

A verification of the risk assessment by an unaffiliated third party, as specified in Requirement R2, could consist of:

1. Certifying that the Requirement R1 risk assessment considers the Transmission stations and Transmission substations identified in Applicability Section 4.1.1.
2. Review of the model used to conduct the risk assessment to ensure it contains sufficient system topology to identify Transmission stations and Transmission substations that if rendered inoperable or damaged could cause instability, uncontrolled separation, or Cascading within an Interconnection.
3. Review of the Requirement R1 risk assessment methodology.

This requirement provides the flexibility for a TO to select from unaffiliated registered and non-registered entities with transmission planning or analysis experience to perform the verification of the Requirement R1 risk assessment. The term unaffiliated means that the selected verifying entity cannot be a corporate affiliate (i.e., the verifying or third party reviewer cannot be an entity that corporately controls, is controlled by, or is under common control with the TO). The verifying entity also cannot be a division of the TO that operates as a functional unit.

The prohibition on registered entities using a corporate affiliate to conduct the verification, however, does not prohibit a governmental entity (e.g., a city, a municipality, a U.S. federal power marketing agency, or any other political subdivision of U.S. or Canadian federal, state, or provincial governments) from selecting as the verifying entity another governmental entity within the same political subdivision. For instance, a U.S. federal power marketing agency may select as its verifier another U.S. federal agency to conduct its verification so long as the selected entity has transmission planning or analysis experience. Similarly, a TO owned by a Canadian province can use a separate agency of that province to perform the verification. The verifying entity, however, must still be a third party and cannot be a division of the registered entity that operates as a functional unit.

Requirement R2 also provides that the "verification may occur concurrent with or after the risk assessment performed under Requirement R1." This provision is designed to provide the TO the flexibility to work with the verifying entity throughout (i.e., concurrent with) the risk assessment, which for some TOs may be more efficient and effective. In other words, a TO could collaborate with their unaffiliated verifying entity to perform the risk assessment under Requirement R1 such that both Requirement R1 and

Requirement R2 are satisfied concurrently. The intent of Requirement R2 is to have an entity other than the owner or operator of the facility to be involved in the risk assessment process and have an opportunity to provide input. Accordingly, Requirement R2 is designed to allow entities the discretion to have a two-step process, where the TO performs the risk assessment and subsequently has a third party review that assessment, or a one-step process, where the entity collaborates with a third party to perform the risk assessment.

Characteristics to consider in selecting a third party reviewer could include:

- Registered Entity with applicable planning and reliability functions.
- Experience in power system studies and planning.
- The entity's understanding of the MOD standards, TPL standards, and facility ratings as they pertain to planning studies.
- The entity's familiarity with the Interconnection within which the TO is located.

With respect to the requirement that TO develop and implement procedures for protecting confidential and sensitive information, the TO could have a method for identifying documents that require confidential treatment. One mechanism for protecting confidential or sensitive information is to prohibit removal of sensitive or confidential information from the TO's site. TOs could include such a prohibition in a non-disclosure agreement with the verifying entity.

A Technical feasibility study is not required in the Requirement R2 documentation of the technical basis for not modifying the identification in accordance with the recommendation.

On the issue of the difference between a verifier in Requirement R2 and a reviewer in Requirement R6, the DT indicates that the verifier will confirm that the risk assessment was completed in accordance with Requirement R1, including the number of Transmission stations and substations identified, while the reviewer in Requirement R6 is providing expertise on the manner in which the evaluation of threats was conducted in accordance with Requirement R4, and the physical security plan in accordance with Requirement R5. In the latter situation there is no verification of a technical analysis, rather an application of experience and expertise to provide guidance or recommendations, if needed.

Parts 2.4 and 6.4 require the entities to have procedures to protect the confidentiality of sensitive or confidential information. Those procedures may include the following elements:

1. Control and retention of information on site for third party verifiers/reviewers.
2. Only "need to know" employees, etc., get the information.
3. Marking documents as confidential
4. Securely storing and destroying information when no longer needed.
5. Not releasing information outside the entity without, for example, General Counsel sign-off.

Requirement R3 (This is now Requirement R7 in CIP-014-4)
Some TOPs will have obligations under this standard for certain primary control centers. Those obligations, however, are contingent upon a Transmission Owner(TO) first completing the risk assessment specified by Requirement R1 and the verification specified by Requirement R2. Requirement R3 is intended to ensure that a TOP that has operational control of a primary control center identified in Requirement R1 receive notice so that the TOP may fulfill the rest of the obligations required in Requirements R4 through R6. Since the timing obligations in Requirements R4 through R6 are based upon completion of Requirement R2, the TO must also include within the notice the date of completion of Requirement R2. Similarly, the TO must notify the TOP of any removals from identification that result from a subsequent risk assessment under Requirement R1 or as a result of the verification process under Requirement R2.

Requirement R4 (This is now Requirement R8 in CIP-014-4)
This requirement requires owners and operators of facilities identified by the Requirement R1 risk assessment and that are verified under Requirement R2 to conduct an assessment of potential threats and vulnerabilities to those Transmission stations, Transmission substations, and primary control centers using a tailored evaluation process. Threats and vulnerabilities may vary from facility to facility based on any number of factors that include, but are not limited to, location, size, function, existing physical security protections, and attractiveness as a target.

In order to effectively conduct a threat and vulnerability assessment, the asset owner may be the best source to determine specific site vulnerabilities, but current and evolving threats may best be determined by others in the intelligence or law enforcement communities. A number of resources have been identified in the standard, but many others exist and asset owners are not limited to where they may turn for assistance. Additional resources may include state or local fusion centers, U.S. Department of Homeland Security, Federal Bureau of Investigations (FBI), Public Safety Canada, Royal Canadian Mounted Police, and InfraGard chapters coordinated by the FBI.

The Responsible Entity is required to take a number of factors into account in Parts 4.1 to 4.3 in order to make a risk-based evaluation under Requirement R4.

To assist in determining the current threat for a facility, the prior history of attacks on similarly protected facilities should be considered when assessing probability and likelihood of occurrence at the facility in question.

Resources that may be useful in conducting threat and vulnerability assessments include:

- NERC Security Guideline for the Electricity Sector: Physical Security.
- NERC Security Guideline: Physical Security Response.
- ASIS International General Risk Assessment Guidelines.
- ASIS International Facilities Physical Security Measure Guideline.
- ASIS International Security Management Standard: Physical Asset Protection.

- Whole Building Design Guide - Threat/Vulnerability Assessments.

Requirement R5 (This is now Requirement R9 in CIP-014-4)
This requirement specifies development and implementation of a security plan(s) designed to protect against attacks to the facilities identified in Requirement R1 based on the assessment performed under Requirement R4.

Requirement R5 specifies the following attributes for the physical security plan:

- *Resiliency or security measures designed collectively to deter, detect, delay, assess, communicate, and respond to potential physical threats and vulnerabilities identified during the evaluation conducted in Requirement R4.*

  Resiliency may include, among other things:

  a. System topology changes,

  b. Spare equipment,

  c. Construction of a new Transmission station or Transmission substation.

  While most security measures will work together to collectively harden the entire site, some may be allocated to protect specific critical components. For example, if protection from gunfire is considered necessary, the entity may only install ballistic protection for critical components, not the entire site.

- *Law enforcement contact and coordination information.*

  Examples of such information may be posting 9-1-1 for emergency calls and providing substation safety and familiarization training for local and federal law enforcement, fire department, and Emergency Medical Services.

- *A timeline for executing the physical security enhancements and modifications specified in the physical security plan.*

  Entities have the flexibility to prioritize the implementation of the various resiliency or security enhancements and modifications in their security plan according to risk, resources, or other factors. The requirement to include a timeline in the physical security plan for executing the actual physical security enhancements and modifications does not also require that the enhancements and modifications be completed within 120 days. The actual timeline may extend beyond the 120 days, depending on the amount of work to be completed.

- *Provisions to evaluate evolving physical threats, and their corresponding security measures, to the Transmission station(s), Transmission substation(s), or primary control center(s).*

  A registered entity's physical security plan should include processes and responsibilities for obtaining and handling alerts, intelligence, and threat warnings from various sources. Some of these sources could include the ERO, E-ISAC, and US and/or Canadian federal agencies. This information should be used to reevaluate or consider changes in the security plan and corresponding security measures of the security plan found in R5.

Incremental changes made to the physical security plan prior to the next required third party review do not require additional third party reviews.

Requirement R6 (This is now Requirement R10 in CIP-014-4)
This requirement specifies review by an entity other than the TO or TOP with appropriate expertise for the evaluation performed according to Requirement R4 and the security plan(s) developed according to Requirement R5. As with Requirement R2, the term unaffiliated means that the selected third party reviewer cannot be a corporate affiliate (*i.e.,* the third party reviewer cannot be an entity that corporately controls, is controlled by or is under common control with, the TOP). A third party reviewer also cannot be a division of the TOP that operates as a functional unit.

As noted in the guidance for Requirement R2, the prohibition on registered entities using a corporate affiliate to conduct the review, however, does not prohibit a governmental entity from selecting as the third party reviewer another governmental entity within the same political subdivision. For instance, a city or municipality may use its local enforcement agency, so long as the local law enforcement agency satisfies the criteria in Requirement R6. The third party reviewer, however, must still be a third party and cannot be a division of the registered entity that operates as a functional unit.

The Responsible Entity can select from several possible entities to perform the review:

- *An entity or organization with electric industry physical security experience and whose review staff has at least one member who holds either a Certified Protection Professional or Physical Security Professional certification.*

  In selecting Certified Protection Professional and Physical Security Professional for use in this standard, the DT believed it was important that if a private entity such as a consulting or security firm was engaged to conduct the third party review, they must tangibly demonstrate competence to conduct the review. This includes electric industry physical security experience and either of the premier security industry certifications sponsored by ASIS International. The ASIS certification program was initiated in 1977, and those that hold the Certified Protection Professional certification are board certified in security management. Those that hold the Physical Security Professional certification are board certified in physical security.
- *An entity or organization approved by the ERO.*
- *A governmental agency with physical security expertise.*
- *An entity or organization with demonstrated law enforcement, government, or military physical security expertise.*

As with the verification under Requirement R2, Requirement R6 provides that the "review may occur concurrently with or after completion of the evaluation performed under Requirement R4 and the security plan development under Requirement R5." This provision is designed to provide applicable TOs and TOPs the flexibility to work with the third party reviewer throughout (*i.e.,* concurrent with) the evaluation performed according to Requirement R4 and the security plan(s) developed according to Requirement R5, which for some Responsible Entities may be more efficient and effective. In other

words, a TO or TOP could collaborate with their unaffiliated third party reviewer to perform an evaluation of potential threats and vulnerabilities (Requirement R4) and develop a security plan (Requirement R5) to satisfy Requirements R4 through R6 simultaneously. The intent of Requirement R6 is to have an entity other than the owner or operator of the facility to be involved in the Requirement R4 evaluation and the development of the Requirement R5 security plans and have an opportunity to provide input on the evaluation and the security plan. Accordingly, Requirement R6 is designed to allow entities the discretion to have a two-step process, where the TO performs the evaluation and develops the security plan itself and then has a third party review that assessment, or a one-step process, where the entity collaborates with a third party to perform the evaluation and develop the security plan.

Rationale for Attachment 1

The drafting team moved the applicability language from CIP-014-3 to Attachment 1 to make the standard easier to read.

The purpose of Reliability Standard CIP-014 is to protect Transmission stations and Transmission substations, and their associated primary control centers that if rendered inoperable or damaged as a result of a physical attack could result in instability, uncontrolled separation, or Cascading within an Interconnection. To properly include those entities that own or operate such Facilities, the Reliability Standard CIP-014 first applies to TOs that own Transmission Facilities that meet the specific criteria in Applicability Section 4.1.1.1 through 4.1.1.4. The Facilities described in Applicability Section 4.1.1.1 through 4.1.1.4 mirror those Transmission Facilities that meet the bright line criteria for "Medium Impact" Transmission Facilities under Attachment 1 of Reliability Standard CIP-002-5.1a. Each TO that owns Transmission Facilities that meet the criteria in Section 4.1.1.1 through 4.1.1.4 is required to perform a risk assessment as specified in Requirement R1 to identify its Transmission stations and Transmission substations, and their associated primary control centers, that if rendered inoperable or damaged as a result of a physical attack could result in instability, uncontrolled separation, or Cascading within an Interconnection. The DT expects this population will be small and that many TOs that meet the applicability of this standard will not actually identify any such Facilities. Only those TOs with Transmission stations or Transmission substations identified in the risk assessment (and verified under Requirement R2) have performance obligations under Requirements R3 through R6.

This standard also applies to TOPs. A TOP's obligations under the standard, however, are only triggered if the TOP is notified by an applicable TO under Requirement R3 that the TOP operates a primary control center that operationally controls a Transmission station(s) or Transmission substation(s) identified in the Requirement R1 risk assessment. A primary control center operationally controls a Transmission station or Transmission substation when the control center's electronic actions can cause direct physical action at the identified Transmission station or Transmission substation, such as opening a breaker, as opposed to a control center that only has information from the Transmission station or Transmission substation and must coordinate direct action through another entity. Only TOPs who are notified that they have primary control centers under this standard have performance obligations under Requirements R4 through R6. In other words, primary control center for purposes of this Standard is the control center that the TO or TOP, respectively, uses as its primary, permanently-manned site to physically operate a Transmission station or Transmission substation that is identified in Requirement R1 and verified in Requirement R2. Control

centers that provide back-up capability are not applicable, as they are a form of resiliency and intentionally redundant.

The DT considered several options for bright line criteria that could be used to determine applicability and provide an initial threshold that defines the set of Transmission stations and Transmission substations that would meet the directives of the FERC order on physical security (*i.e.*, those that could cause instability, uncontrolled separation, or Cascading within an Interconnection). The DT determined that using the criteria for Medium Impact Transmission Facilities in Attachment 1 of CIP-002-5.1a would provide a conservative threshold for defining which Transmission stations and Transmission substations must be included in the risk assessment in Requirement R1 of CIP-014. Additionally, the DT concluded that using the CIP-002-5.1a Medium Impact criteria was appropriate because it has been approved by stakeholders, NERC, and FERC, and its use provides a technically sound basis to determine which TOs should conduct the risk assessment. As described in CIP-002-5.1a, the failure of a Transmission station or Transmission substation that meets the Medium Impact criteria could have the capability to result in exceeding one or more Interconnection Reliability Operating Limits (IROLs). The DT understands that using this bright line criteria to determine applicability may require some TOs to perform risk assessments under Requirement R1 that will result in a finding that none of their Transmission stations or Transmission substations would pose a risk of instability, uncontrolled separation, or Cascading within an Interconnection. However, the DT determined that higher bright lines could not be technically justified to ensure inclusion of all Transmission stations and Transmission substations, and their associated primary control centers that, if rendered inoperable or damaged as a result of a physical attack could result in instability, uncontrolled separation, or Cascading within an Interconnection. Further guidance and technical basis for the bright line criteria for Medium Impact Facilities can be found in the Guidelines and Technical Basis section of CIP-002-5.1a.

Additionally, the DT determined that it was not necessary to include Generator Operators and Generator Owners in the Reliability Standard. First, Transmission stations or Transmission substations interconnecting generation facilities are considered when determining applicability. TOs will consider those Transmission stations and Transmission substations that include a Transmission station on the high side of the Generator Step-up transformer using Applicability Section 4.1.1.1 and 4.1.1.2. As an example, a Transmission station or Transmission substation identified as a TO facility that interconnects generation will be subject to the Requirement R1 risk assessment if it operates at 500kV or greater or if it is connected at 200 kV – 499kV to three or more other Transmission stations or Transmission substations and has an "aggregate weighted value" exceeding 3,000 according to the table in Applicability Section 4.1.1.2. Second, the Transmission analysis or analyses conducted under Requirement R1 should take into account the impact of the loss of generation connected to applicable Transmission stations or Transmission substations. Additionally, the FERC order does not explicitly mention generation assets and is reasonably understood to focus on the most critical Transmission Facilities. The diagram below shows an example of a station.

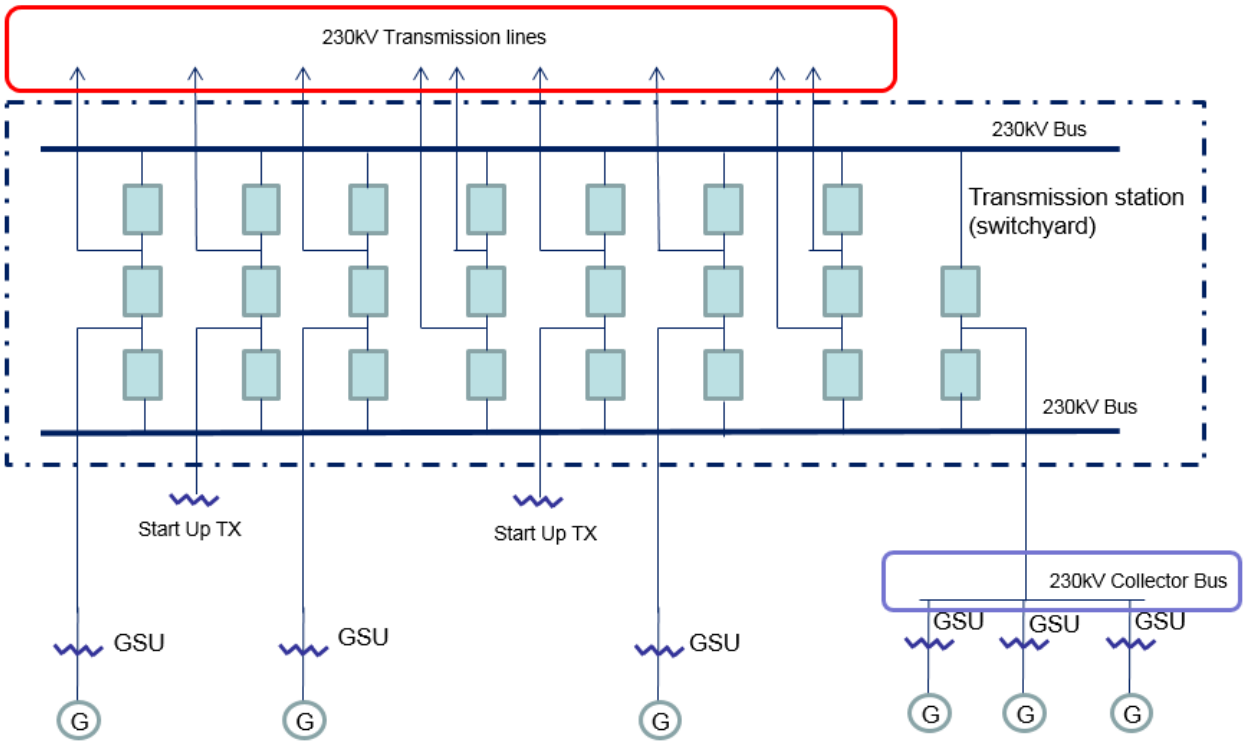

Also, the DT uses the phrase "Transmission stations or Transmission substations" to recognize the existence of both stations and substations. Many entities in industry consider a substation to be a location with physical borders (i.e., fence, wall, etc.) that contains at least an autotransformer. Locations also exist that do not contain autotransformers, and many entities in industry refer to those locations as stations (switching stations or switchyards). Therefore, the DT chose to use both "station" and "substation" to refer to the locations where groups of Transmission Facilities exist.

On the issue of joint ownership, the DT recognizes that this issue is not unique to CIP-014, and expects that the applicable TOs and TOPs will develop memorandums of understanding, agreements, Coordinated Functional Registrations, or procedures, etc., to designate responsibilities under CIP-014 when joint ownership is at issue, which is similar to what many entities have completed for other Reliability Standards.

The language contained in the applicability section regarding the collector bus is directly copied from CIP-002-5.1a, Attachment 1, and has no additional meaning within the CIP-014 standard.

Timeline

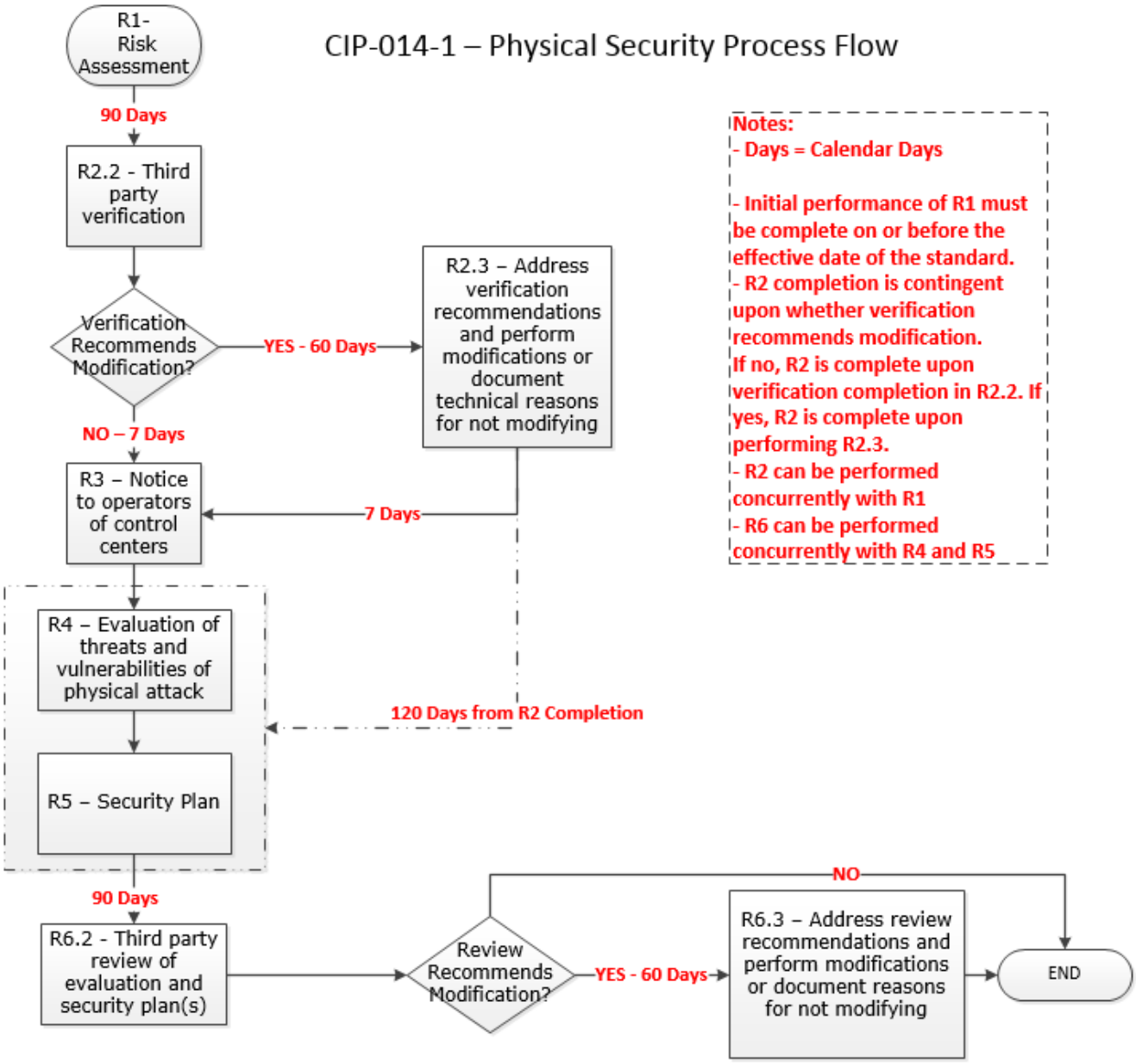
CIP-014-1 – Physical Security Process Flow
R1- Risk Assessment
90 Days
R2.2 - Third party verification
Verification Recommends Modification?
YES - 60 Days
R2.3 – Address verification recommendations and perform modifications or document technical reasons for not modifying
NO – 7 Days
R3 – Notice to operators of control centers
7 Days
R4 – Evaluation of threats and vulnerabilities of physical attack
120 Days from R2 Completion
R5 – Security Plan
90 Days
R6.2 - Third party review of evaluation and security plan(s)
Review Recommends Modification?
YES - 60 Days
NO
R6.3 – Address review recommendations and perform modifications or document reasons for not modifying
END
Notes:
- Days = Calendar Days
- Initial performance of R1 must be complete on or before the effective date of the standard.
- R2 completion is contingent upon whether verification recommends modification. If no, R2 is complete upon verification completion in R2.2. If yes, R2 is complete upon performing R2.3.
- R2 can be performed concurrently with R1
- R6 can be performed concurrently with R4 and R5

Rationale

During development of this standard, text boxes were embedded within the standard to explain the rationale for various parts of the standard. Upon Board of Trustees approval, the text from the rationale text boxes was moved to this section.

Rationale for Requirement R1 (This is for the old Requirement R1 in CIP-014-3):
This requirement meets the FERC directive from paragraph 6 of its March 7, 2014 order on physical security to perform a risk assessment to identify which facilities if rendered inoperable or damaged could impact an Interconnection through instability, uncontrolled separation, or cascading failures. The requirement is not intended to bring within the scope of the standard a Transmission station or Transmission substation unless the applicable TO determines through technical studies and analyses based on objective analysis, technical expertise, operating experience and experienced judgment that the loss of such facility would have a critical impact on the operation of the Interconnection in the event the asset is rendered inoperable or damaged. In the November 20, 2014 Order, FERC reiterated that "only an instability that has a "critical impact on the operation of the interconnection" warrants finding that the facility causing the instability is critical under Requirement R1." The TO may determine the criteria for critical impact by considering, among other criteria, any of the following:

- Criteria or methodology used by Transmission Planners or Planning Coordinators in TPL-001-4, Requirement R6
- NERC EOP-004-4 reporting criteria
- Area or magnitude of potential impact

Requirement R1 also meets the FERC directive for periodic reevaluation of the risk assessment by requiring the risk assessment to be performed every 30 months (or 60 months for an entity that has not identified in a previous risk assessment any Transmission stations or Transmission substations that if rendered inoperable or damaged could result in instability, uncontrolled separation, or Cascading within an Interconnection).

After identifying each Transmission station and Transmission substation that meets the criteria in Requirement R1, it is important to additionally identify the primary control center that operationally controls that Transmission station or Transmission substation (i.e., the control center whose electronic actions can cause direct physical actions at the identified Transmission station and Transmission substation, such as opening a breaker, compared to a control center that only has the ability to monitor the Transmission station and Transmission substation and, therefore, must coordinate direct physical action through another entity).

Rationale for Requirement R2 (This is now Requirement R6 in CIP-014-4):
This requirement meets the FERC directive from paragraph 11 in the order on physical security requiring verification by an entity other than the owner or operator of the risk assessment performed under Requirement R1.

This requirement provides the flexibility for a TO to select registered and non-registered entities with transmission planning or analysis experience to perform the verification of the Requirement R1 risk assessment. The term "unaffiliated" means that the selected verifying entity cannot be a corporate affiliate (i.e., the verifying entity cannot be an entity that controls, is controlled by, or is under common control with, the TO). The verifying entity also cannot be a division of the TO that operates as a functional unit. The term "unaffiliated" is not intended to prohibit a governmental entity from using another government entity to be a verifier under Requirement R2.

Requirement R2 also provides the TO the flexibility to work with the verifying entity throughout the Requirement R1 risk assessment, which for some TO may be more efficient and effective. In other words, a TO could coordinate with their unaffiliated verifying entity to perform a Requirement R1 risk assessment to satisfy both Requirement R1 and Requirement R2 concurrently.

Planning Coordinator is a functional entity listed in Part 2.1. The Planning Coordinator and Planning Authority are the same entity as shown in the NERC Glossary of Terms Used in NERC Reliability Standards.

Rationale for Requirement R3 (This is now Requirement R7 in CIP-014-4):
Some TOPs will have obligations under this standard for certain primary control centers. Those obligations, however, are contingent upon a TO first identifying which Transmission stations and Transmission substations meet the criteria specified by Requirement R1, as verified according to Requirement R2. This requirement is intended to ensure that a TOP that has operational control of a primary control center identified in Requirement R1, Part 1.2 of a Transmission station or Transmission substation verified according to Requirement R2 receives notice of such identification so that the TOP may timely fulfill its resulting obligations under Requirements R4 through R6. Since the timing obligations in Requirements R4 through R6 are based upon completion of Requirement R2, the TO must also include notice of the date of completion of Requirement R2. Similarly, the TO must notify the TOP of any removals from identification that result from a subsequent risk assessment under Requirement R1 or the verification process under Requirement R2.

Rationale for Requirement R4 (This is now Requirement R8 in CIP-014-4):
This requirement meets the FERC directive from paragraph 8 in the order on physical security that the reliability standard must require tailored evaluation of potential threats and vulnerabilities to facilities identified in Requirement R1 and verified according to Requirement R2. Threats and vulnerabilities may vary from facility to facility based on factors such as the facility's location, size, function, existing protections, and attractiveness of the target. As such, the requirement does not mandate a one-size-fits-all approach but requires entities to account for the unique characteristics of their facilities.

Requirement R4 does not explicitly state when the evaluation of threats and vulnerabilities must occur or be completed. However, Requirement R5 requires that the entity's security plan(s), which is dependent on the Requirement R4 evaluation, must be completed within 120 calendar days following completion of Requirement R2. Thus, an entity has the flexibility when to complete the Requirement R4 evaluation, provided that it is completed in time to comply with the requirement in Requirement R5 to develop a physical security plan 120 calendar days following completion of Requirement R2.

Rationale for Requirement R5 (This is now Requirement R9 in CIP-014-4):
This requirement meets the FERC directive from paragraph 9 in the order on physical security requiring the development and implementation of a security plan(s) designed to protect against attacks to the facilities identified in Requirement R1 based on the assessment performed under Requirement R4.

Rationale for Requirement R6 (This is now Requirement R10 in CIP-014-4):
This requirement meets the FERC directive from paragraph 11 in the order on physical security requiring review by an entity other than the owner or operator with appropriate expertise of the evaluation performed according to Requirement R4 and the security plan(s) developed according to Requirement R5.

As with the verification required by Requirement R2, Requirement R6 provides TOs and TOPs the flexibility to work with the third party reviewer throughout the Requirement R4 evaluation and the development of the Requirement R5 security plan(s). This would allow entities to satisfy their obligations under Requirement R6 concurrent with the satisfaction of their obligations under Requirements R4 and R5.

Exhibit D

Order No. 672 Criteria

EXHIBIT D

Order No. 672 Criteria

In Order No. 672,[1] the Commission identified a number of criteria it will use to analyze Reliability Standards proposed for approval to ensure they are just, reasonable, not unduly discriminatory or preferential, and in the public interest. The discussion below identifies these factors and explains how the proposed Reliability Standard has met or exceeded the criteria.

1. Proposed Reliability Standards must be designed to achieve a specified reliability goal and must contain a technically sound means to achieve that goal.[2]

The purpose of Reliability Standard CIP-014 is to identify and protect Transmission stations and Transmission substations, and their associated primary control centers, that if rendered inoperable or damaged due to a physical attack, could cause instability, uncontrolled separation, or Cascading within an Interconnection. Proposed Reliability Standard CIP-014-4 will further reliability by assuring that Reliability Standard CIP-014 provides an adequate and consistent approach for evaluating instability and identifying infrastructure critical to the operation of the Bulk-Power System ("BPS"). These revisions address the concerns in NERC's *Evaluation of the*

---

[1] *Rules Concerning Certification of the Electric Reliability Organization; and Procedures for the Establishment, Approval, and Enforcement of Electric Reliability Standards*, Order No. 672, 114 FERC ¶ 61,104, *order on reh'g*, Order No. 672-A, 114 FERC ¶ 61,328 (2006) [hereinafter Order No. 672].

[2] *See* Order No. 672, at P 321 ("The proposed Reliability Standard must address a reliability concern that falls within the requirements of section 215 of the FPA. That is, it must provide for the reliable operation of Bulk-Power System facilities. It may not extend beyond reliable operation of such facilities or apply to other facilities. Such facilities include all those necessary for operating an interconnected electric energy transmission network, or any portion of that network, including control systems. The proposed Reliability Standard may apply to any design of planned additions or modifications of such facilities that is necessary to provide for reliable operation. It may also apply to Cybersecurity protection.").

See Order No. 672, at P 324 ("The proposed Reliability Standard must be designed to achieve a specified reliability goal and must contain a technically sound means to achieve this goal. Although any person may propose a topic for a Reliability Standard to the ERO, in the ERO's process, the specific proposed Reliability Standard should be developed initially by persons within the electric power industry and community with a high level of technical expertise and be based on sound technical and engineering criteria. It should be based on actual data and lessons learned from past operating incidents, where appropriate. The process for ERO approval of a proposed Reliability Standard should be fair and open to all interested persons.").

Physical Security Reliability Standard and Physical Security Attacks to the Bulk-Power System[3] ("CIP-014 Report") that there has been inconsistency in registered entity CIP-014-3 risk assessments to most appropriately identify critical infrastructure.

2. Proposed Reliability Standards must be applicable only to users, owners, and operators of the bulk power system, and must be clear and unambiguous as to what is required and who is required to comply.[4]

The proposed Reliability Standard is clear and unambiguous as to what is required and who is required to comply, in accordance with Order No. 672. Proposed Reliability Standard CIP-014-4 would continue to apply to Transmission Owners and Transmission Operators. The proposed Reliability Standard clearly articulates the actions that applicable entities must take to comply with the standard.

3. A proposed Reliability Standard must include clear and understandable consequences and a range of penalties (monetary and/or non-monetary) for a violation.[5]

The Violation Risk Factors ("VRFs") and Violation Severity Levels ("VSLs") for the proposed Reliability Standard comport with NERC and Commission guidelines related to their assignment, as discussed further in **Exhibit E**. The assignment of the severity level for each VSL is consistent with the corresponding requirement, and the VSLs should ensure uniformity and consistency in the determination of penalties. The VSLs do not use any ambiguous terminology, thereby supporting uniformity and consistency in the determination of similar penalties for similar

---

[3] *See Evaluation of the Physical Security Reliability Standard and Physical Security Attacks to the Bulk-Power System,* Docket No. RD23-2-000 (Apr. 14, 2023).

[4] *See* Order No. 672, at P 322 ("The proposed Reliability Standard may impose a requirement on any user, owner, or operator of such facilities, but not on others.").

See Order No. 672, at P 325 ("The proposed Reliability Standard should be clear and unambiguous regarding what is required and who is required to comply. Users, owners, and operators of the Bulk-Power System must know what they are required to do to maintain reliability.").

[5] *See* Order No. 672, at P 326 ("The possible consequences, including range of possible penalties, for violating a proposed Reliability Standard should be clear and understandable by those who must comply.").

violations. For these reasons, the proposed Reliability Standard includes clear and understandable consequences in accordance with Order No. 672.

4. A proposed Reliability Standard must identify clear and objective criteria or measures for compliance, so that it can be enforced in a consistent and non-preferential manner.[6]

The proposed Reliability Standard contains measures that support each requirement by clearly identifying what is required and how the requirement will be enforced. These measures help provide clarity regarding how the requirements would be enforced and help ensure that the requirements would be enforced in a clear, consistent, and non-preferential manner and without prejudice to any party.

5. Proposed Reliability Standards should achieve a reliability goal effectively and efficiently, but do not necessarily have to reflect "best practices" without regard to implementation cost or historical regional infrastructure design.[7]

The proposed Reliability Standard achieves its reliability goals effectively and efficiently in accordance with Order No. 672. Proposed Reliability Standard CIP-014-4 will enhance reliability by ensuring an adequate and consistent approach in evaluating instability as well as the identification of Transmission stations, Transmission substations, and their associated primary control centers that are critical to the operation of the BPS. Specifically, the proposed revisions would: (1) clarify the risk assessment methods for studying instability, uncontrolled separation, and Cascading within an Interconnection, including accounting for dynamic studies; (2) clarify the case(s) used for the risk assessment, by tailoring them to the Requirement R1 in-service window and correcting discrepancies between the study period, frequency of study, and the base case(s) a

---

[6] *See* Order No. 672, at P 327 ("There should be a clear criterion or measure of whether an entity is in compliance with a proposed Reliability Standard. It should contain or be accompanied by an objective measure of compliance so that it can be enforced and so that enforcement can be applied in a consistent and non-preferential manner.").

[7] *See* Order No. 672, at P 328 ("The proposed Reliability Standard does not necessarily have to reflect the optimal method, or 'best practice,' for achieving its reliability goal without regard to implementation cost or historical regional infrastructure design. It should however achieve its reliability goal effectively and efficiently.").

Transmission Owner uses; (3) assure the adequacy and consistent implementation of technically supported justification for study decisions; (4) clarify what study scenarios and other study assumptions are appropriate and reasonable considering the potential range of issues during a physical attack, including the loss of station elements without the reliance on local system protection; and (5) clarify how to account for adjacent Transmission stations or Transmission substations of differing ownership as well as for those Transmission stations or Transmission substations within line-of-sight to each other by providing clear expectations regarding the inclusion of physically adjacent elements for the purpose of evaluating the impact from a physical attack

6. Proposed Reliability Standards cannot be "lowest common denominator," i.e., cannot reflect a compromise that does not adequately protect Bulk-Power System reliability. Proposed Reliability Standards can consider costs to implement for smaller entities, but not at consequences of less than excellence in operating system reliability.[8]

The proposed Reliability Standard does not reflect a "lowest common denominator" approach. The proposed Reliability Standard will further reliability by assuring that Reliability Standard CIP-014 provides an adequate and consistent approach for evaluating instability and identifying infrastructure critical to the operation of the BPS.

[8] *See* Order No. 672, at P 329 ("The proposed Reliability Standard must not simply reflect a compromise in the ERO's Reliability Standard development process based on the least effective North American practice—the so-called 'lowest common denominator'—if such practice does not adequately protect Bulk-Power System reliability. Although the Commission will give due weight to the technical expertise of the ERO, we will not hesitate to remand a proposed Reliability Standard if we are convinced it is not adequate to protect reliability.").

See Order No. 672, at P 330 ("A proposed Reliability Standard may take into account the size of the entity that must comply with the Reliability Standard and the cost to those entities of implementing the proposed Reliability Standard. However, the ERO should not propose a 'lowest common denominator' Reliability Standard that would achieve less than excellence in operating system reliability solely to protect against reasonable expenses for supporting this vital national infrastructure. For example, a small owner or operator of the Bulk-Power System must bear the cost of complying with each Reliability Standard that applies to it.").

7. Proposed Reliability Standards must be designed to apply throughout North America to the maximum extent achievable with a single Reliability Standard while not favoring one geographic area or regional model. It should take into account regional variations in the organization and corporate structures of transmission owners and operators, variations in generation fuel type and ownership patterns, and regional variations in market design if these affect the proposed Reliability Standard.[9]

The proposed Reliability Standard would apply consistently throughout North America and does not favor one geographic area or regional model.

8. Proposed Reliability Standards should cause no undue negative effect on competition or restriction of the grid beyond any restriction necessary for reliability.[10]

The proposed Reliability Standard would have no undue negative effect on competition and would not unreasonably restrict the available transmission capacity or limit the use of the BPS in a preferential manner. The proposed standard would require the same performance by each of the applicable entities.

9. The implementation time for the proposed Reliability Standard is reasonable.[11]

The proposed implementation period, included as **Exhibit B**, for the proposed Reliability Standard is just and reasonable and designed to balance the urgency to implement the requirements while affording Responsible Entities time to incorporate the updated requirements into their

---

[9] *See* Order No. 672, at P 331 ("A proposed Reliability Standard should be designed to apply throughout the interconnected North American Bulk-Power System, to the maximum extent this is achievable with a single Reliability Standard. The proposed Reliability Standard should not be based on a single geographic or regional model but should take into account geographic variations in grid characteristics, terrain, weather, and other such factors; it should also take into account regional variations in the organizational and corporate structures of transmission owners and operators, variations in generation fuel type and ownership patterns, and regional variations in market design if these affect the proposed Reliability Standard.").

[10] *See* Order No. 672, at P 332 ("As directed by section 215 of the FPA, the Commission itself will give special attention to the effect of a proposed Reliability Standard on competition. The ERO should attempt to develop a proposed Reliability Standard that has no undue negative effect on competition. Among other possible considerations, a proposed Reliability Standard should not unreasonably restrict available transmission capability on the Bulk-Power System beyond any restriction necessary for reliability and should not limit use of the Bulk-Power System in an unduly preferential manner. It should not create an undue advantage for one competitor over another.").

[11] *See* Order No. at P 333 ("In considering whether a proposed Reliability Standard is just and reasonable, the Commission will consider also the timetable for implementation of the new requirements, including how the proposal balances any urgency in the need to implement it against the reasonableness of the time allowed for those who must comply to develop the necessary procedures, software, facilities, staffing or other relevant capability.").

processes. The proposed implementation plan provides that Reliability Standard CIP-014-4 shall become effective on the first day of the first calendar quarter that is 24 calendar months after the effective date of a Commission order approving the standard. The proposed implementation plan further provides that the initial risk assessment required by Reliability Standard CIP-014-4 Requirement R5, must be completed on or before the effective date of the standard and that subsequent risk assessments shall be performed no later than 36 calendar months following the effective date of Reliability Standard CIP-014-4. Under the proposed implementation plan, Reliability Standard CIP-014-3 shall be retired immediately prior to the effective date of Reliability Standard CIP-014-4.

10. The Reliability Standard was developed in an open and fair manner and in accordance with the Commission-approved Reliability Standard development process.[12]

The proposed Reliability Standard was developed in accordance with NERC's Commission-approved processes for developing and approving Reliability Standards. **Exhibit F** includes a summary of the Reliability Standard development proceedings, and details the processes followed to develop the proposed Reliability Standard. These processes included, among other things, comment periods, pre-ballot review periods, and balloting periods. Additionally, all meetings of the drafting team were properly noticed and open to the public.

[12] *See* Order No. 672, at P 334 ("Further, in considering whether a proposed Reliability Standard meets the legal standard of review, we will entertain comments about whether the ERO implemented its Commission-approved Reliability Standard development process for the development of the particular proposed Reliability Standard in a proper manner, especially whether the process was open and fair. However, we caution that we will not be sympathetic to arguments by interested parties that choose, for whatever reason, not to participate in the ERO's Reliability Standard development process if it is conducted in good faith in accordance with the procedures approved by the Commission.").

11. NERC must explain any balancing of vital public interests in the development of proposed Reliability Standards.[13]

NERC has identified no competing public interests regarding the request for approval of this proposed Reliability Standard. No comments were received that indicated that the proposed Reliability Standard conflicts with other vital public interests.

12. Proposed Reliability Standards must consider any other appropriate factors.[14]

No other negative factors relevant to whether the proposed Reliability Standard is just and reasonable were identified.

[13] *See* Order No. 672, at P 335 ("Finally, we understand that at times development of a proposed Reliability Standard may require that a particular reliability goal must be balanced against other vital public interests, such as environmental, social and other goals. We expect the ERO to explain any such balancing in its application for approval of a proposed Reliability Standard.").

[14] *See* Order No. 672, at P 323 ("In considering whether a proposed Reliability Standard is just and reasonable, we will consider the following general factors, as well as other factors that are appropriate for the particular Reliability Standard proposed.").

Exhibit E

Analysis of Violation Risk Factors and Violation Severity Levels

NERC
NORTH AMERICAN ELECTRIC RELIABILITY CORPORATION

Violation Risk Factor and Violation Severity Level Justifications

Project 2023-06 CIP-014 Risk Assessment Refinement (CIP-014-4)

This document provides the drafting team's justification for assignment of violation risk factors (VRFs) and violation severity levels (VSLs) for each requirement in CIP-014-4 Physical Security. Each requirement is assigned a VRF and a VSL. These elements support the determination of an initial value range for the Base Penalty Amount regarding violations of requirements in FERC-approved Reliability Standards, as defined in the Electric Reliability Organizations (ERO) Sanction Guidelines. The drafting team applied the following NERC criteria and FERC Guidelines when developing the VRFs and VSLs for the requirements.

NERC Criteria for Violation Risk Factors

High Risk Requirement

A requirement that, if violated, could directly cause or contribute to Bulk Electric System instability, separation, or a cascading sequence of failures, or could place the Bulk Electric System at an unacceptable risk of instability, separation, or cascading failures; or, a requirement in a planning time frame that, if violated, could, under emergency, abnormal, or restorative conditions anticipated by the preparations, directly cause or contribute to Bulk Electric System instability, separation, or a cascading sequence of failures, or could place the Bulk Electric System at an unacceptable risk of instability, separation, or cascading failures, or could hinder restoration to a normal condition.

Medium Risk Requirement

A requirement that, if violated, could directly affect the electrical state or the capability of the Bulk Electric System, or the ability to effectively monitor and control the Bulk Electric System. However, violation of a medium risk requirement is unlikely to lead to Bulk Electric System instability, separation, or cascading failures; or, a requirement in a planning time frame that, if violated, could, under emergency, abnormal, or restorative conditions anticipated by the preparations, directly and adversely affect the electrical state or capability of the Bulk Electric System, or the ability to effectively monitor, control, or restore the Bulk Electric System. However, violation of a medium risk requirement is unlikely, under emergency, abnormal, or restoration conditions anticipated by the preparations, to lead to Bulk Electric System instability, separation, or cascading failures, nor to hinder restoration to a normal condition.

Lower Risk Requirement
A requirement that is administrative in nature and a requirement that, if violated, would not be expected to adversely affect the electrical state or capability of the Bulk Electric System, or the ability to effectively monitor and control the Bulk Electric System; or, a requirement that is administrative in nature and a requirement in a planning time frame that, if violated, would not, under the emergency, abnormal, or restorative conditions anticipated by the preparations, be expected to adversely affect the electrical state or capability of the Bulk Electric System, or the ability to effectively monitor, control, or restore the Bulk Electric System.

FERC Guidelines for Violation Risk Factors

Guideline (1) – Consistency with the Conclusions of the Final Blackout Report

FERC seeks to ensure that VRFs assigned to Requirements of Reliability Standards in these identified areas appropriately reflect their historical critical impact on the reliability of the Bulk-Power System. In the VSL Order, FERC listed critical areas (from the Final Blackout Report) where violations could severely affect the reliability of the Bulk-Power System:

- Emergency operations
- Vegetation management
- Operator personnel training
- Protection systems and their coordination
- Operating tools and backup facilities
- Reactive power and voltage control
- System modeling and data exchange
- Communication protocol and facilities
- Requirements to determine equipment ratings
- Synchronized data recorders
- Clearer criteria for operationally critical facilities
- Appropriate use of transmission loading relief.

Guideline (2) – Consistency within a Reliability Standard
FERC expects a rational connection between the sub-Requirement VRF assignments and the main Requirement VRF assignment.

Guideline (3) – Consistency among Reliability Standards
FERC expects the assignment of VRFs corresponding to Requirements that address similar reliability goals in different Reliability Standards would be treated comparably.

Guideline (4) – Consistency with NERC's Definition of the Violation Risk Factor Level
Guideline (4) was developed to evaluate whether the assignment of a particular VRF level conforms to NERC's definition of that risk level.

Guideline (5) – Treatment of Requirements that Co-mingle More Than One Obligation
Where a single Requirement co-mingles a higher risk reliability objective and a lesser risk reliability objective, the VRF assignment for such Requirements must not be watered down to reflect the lower risk level associated with the less important objective of the Reliability Standard.

NERC Criteria for Violation Severity Levels

VSLs define the degree to which compliance with a requirement was not achieved. Each requirement must have at least one VSL. While it is preferable to have four VSLs for each requirement, some requirements do not have multiple "degrees" of non-compliant performance and may have only one, two, or three VSLs.

VSLs should be based on NERC's overarching criteria shown in the table below:

Lower VSL	Moderate VSL	High VSL	Severe VSL
The performance or product measured almost meets the full intent of the requirement.	The performance or product measured meets the majority of the intent of the requirement.	The performance or product measured does not meet the majority of the intent of the requirement, but does meet some of the intent.	The performance or product measured does not substantively meet the intent of the requirement.

FERC Order of Violation Severity Levels

The FERC VSL guidelines are presented below, followed by an analysis of whether the VSLs proposed for each requirement in the standard meet the FERC Guidelines for assessing VSLs:

Guideline (1) – Violation Severity Level Assignments Should Not Have the Unintended Consequence of Lowering the Current Level of Compliance

Compare the VSLs to any prior levels of non-compliance and avoid significant changes that may encourage a lower level of compliance than was required when levels of non-compliance were used.

Guideline (2) – Violation Severity Level Assignments Should Ensure Uniformity and Consistency in the Determination of Penalties

A violation of a "binary" type requirement must be a "Severe" VSL.
Do not use ambiguous terms such as "minor" and "significant" to describe non-compliant performance.

Guideline (3) – Violation Severity Level Assignment Should Be Consistent with the Corresponding Requirement

VSLs should not expand on what is required in the requirement.

Guideline (4) – Violation Severity Level Assignment Should Be Based on a Single Violation, Not on a Cumulative Number of Violations

Unless otherwise stated in the requirement, each instance of non-compliance with a requirement is a separate violation. Section 4 of the Sanction Guidelines states that assessing penalties on a per violation per day basis is the "default" for penalty calculations.

VRF Justifications for CIP-014-4, Requirement R1	
Proposed VRF	**High**
NERC VRF Discussion	A VRF of higher is appropriate because the requirement, if violated, could directly cause or contribute to Bulk Electric System (BES) instability, separation, or a cascading sequence of failures, or could place the BES at an unacceptable risk of instability, separation, or cascading failures. The VRF is revised and unchanged from the last FERC approved version.
FERC VRF G1 Discussion Guideline 1- Consistency with Blackout Report	This VRF is consistent with the identified areas from the FERC list of critical areas in the Final Blackout Report.
FERC VRF G2 Discussion Guideline 2- Consistency within a Reliability Standard	The VRF for Requirement R1 is consistent with those connections between the sub-Requirement VRF assignments and the main Requirement VRF assignment.
FERC VRF G3 Discussion Guideline 3- Consistency among Reliability Standards	This VRF is consistent with other VRFs that address similar reliability goals in different Reliability Standards.
FERC VRF G4 Discussion Guideline 4- Consistency with NERC Definitions of VRFs	This VRF is consistent with the definition of a High VRF requirement per the criteria filed with FERC as part of the ERO's Sanctions Guidelines.
FERC VRF G5 Discussion Guideline 5- Treatment of Requirements that Co-mingle More	This requirement does not mingle a higher risk reliability objective and a lesser risk reliability objective. Therefore, the VRF reflects the risk of the whole requirement.

VRF Justifications for CIP-014-4, Requirement R1	
Proposed VRF	**High**
than One Obligation	

VSLs for CIP-014-4, Requirement R1			
Lower	**Moderate**	**High**	**Severe**
The Transmission Owner identified each applicable Transmission station(s) and Transmission substation(s) per Attachment 1, but did so after 36 calendar months, but less than or equal to 38 calendar months. OR The Transmission Owner identified each applicable Transmission station(s) and Transmission substation(s), but failed to identify less than or equal to 10% of the applicable Transmission station(s) and Transmission substation(s) per Attachment 1.	The Transmission Owner identified each applicable Transmission station(s) and Transmission substation(s) per Attachment 1, but did so after 38 calendar months, but less than or equal to 40 calendar months. OR The Transmission Owner identified each applicable Transmission station(s) and Transmission substation(s), but failed to identify more than 10% and less than or equal to 20% of the applicable Transmission station(s) and Transmission substation(s) per Attachment 1.	The Transmission Owner identified each applicable Transmission station(s) and Transmission substation(s) per Attachment 1, but did so after 40 calendar months, but less than or equal to 42 calendar months. OR The Transmission Owner identified each applicable Transmission station(s) and Transmission substation(s), but failed to identify more than 20% and less than or equal to 30% of the applicable Transmission station(s) and Transmission substation(s) per Attachment 1.	The Transmission Owner failed to identify each applicable Transmission station(s) and Transmission substation(s) per Attachment 1. OR The Transmission Owner identified each applicable Transmission station(s) and Transmission substation(s) per Attachment 1, but did so after more than 42 calendar months. OR The Transmission Owner identified each applicable Transmission station(s) and Transmission substation(s), but failed to identify more than 30% of the applicable Transmission station(s) and Transmission substation(s) per Attachment 1.

VSL Justifications for CIP-014-4, Requirement R1	
FERC VSL G1 Violation Severity Level Assignments Should Not Have the Unintended Consequence of Lowering the Current Level of Compliance	The proposed VSLs do not have the unintended consequence of lowering the level of compliance.
FERC VSL G2 Violation Severity Level Assignments Should Ensure Uniformity and Consistency in the Determination of Penalties Guideline 2a: The Single Violation Severity Level Assignment Category for "Binary" Requirements Is Not Consistent Guideline 2b: Violation Severity Level Assignments that Contain Ambiguous Language	The proposed VSLs are not binary and do not use any ambiguous terminology, thereby supporting uniformity and consistency in the determination of similar penalties for similar violations.
FERC VSL G3 Violation Severity Level Assignment Should Be Consistent with the Corresponding Requirement	The proposed VSLs use the same terminology as used in the associated requirement and are, therefore, consistent with the requirement.
FERC VSL G4 Violation Severity Level Assignment Should Be Based on A Single Violation, Not on A Cumulative Number of Violations	Each VSL is based on a single violation and not cumulative violations.

VRF Justifications for CIP-014-4, Requirement R2	
Proposed VRF	**Medium**
NERC VRF Discussion	A VRF of Medium is appropriate because, if violated, it could directly affect the electrical state or the capability of the BES, or the ability to effectively monitor and control the BES; however, a violation is unlikely to lead to BES instability, separation, or cascading failures.
FERC VRF G1 Discussion Guideline 1- Consistency with Blackout Report	This VRF is consistent with the identified areas from the FERC list of critical areas in the Final Blackout Report.
FERC VRF G2 Discussion Guideline 2- Consistency within a Reliability Standard	The VRF for Requirement R2 is consistent with those connections between the sub-Requirement VRF assignments and the main Requirement VRF assignment.
FERC VRF G3 Discussion Guideline 3- Consistency among Reliability Standards	This VRF is consistent with other VRFs that address similar reliability goals in different Reliability Standards.
FERC VRF G4 Discussion Guideline 4- Consistency with NERC Definitions of VRFs	This VRF is consistent with the definition of a Medium VRF requirement per the criteria filed with FERC as part of the ERO's Sanctions Guidelines.
FERC VRF G5 Discussion Guideline 5- Treatment of Requirements that Co-mingle More than One Obligation	This requirement does not mingle a higher risk reliability objective and a lesser risk reliability objective. Therefore, the VRF reflects the risk of the whole requirement.

VSLs for CIP-014-4, Requirement R2			
Lower	**Moderate**	**High**	**Severe**
N/A	N/A	N/A	The Transmission Owner with applicable Transmission station(s) or Transmission substation(s) identified in Requirement R1 did not identify existing Bulk Electric System Transmission station(s) and Bulk Electric System Transmission substation(s), irrespective of ownership, within 1500 feet or 457 meters (the shortest distance, measured substation fence line to substation fence line) of an applicable Transmission station or Transmission substation identified in Requirement R1.

VSL Justifications for CIP-014-4, Requirement R2	
FERC VSL G1 Violation Severity Level Assignments Should Not Have the Unintended Consequence of Lowering the Current Level of Compliance	This is a new Requirement and does not have the unintended consequence of lowering the current level of compliance.
FERC VSL G2 Violation Severity Level Assignments Should Ensure Uniformity and Consistency in the Determination of Penalties	The proposed VSLs are binary and do not use any ambiguous terminology, thereby supporting uniformity and consistency in the determination of similar penalties for similar violations. The new Requirement R2 is a binary requirement and thus only assigned a Severe VSL because the Transmission Owners either have or have not identified proximate Transmission station(s) and Transmission substation(s), irrespective of ownership, within 1,500 feet or 457 meters (the shortest distance, measured substation fence line to substation fence line) of an applicable Transmission station or Transmission substation identified in Requirement R1.

VSL Justifications for CIP-014-4, Requirement R2	
Guideline 2a: The Single Violation Severity Level Assignment Category for "Binary" Requirements Is Not Consistent Guideline 2b: Violation Severity Level Assignments that Contain Ambiguous Language	
FERC VSL G3 Violation Severity Level Assignment Should Be Consistent with the Corresponding Requirement	The proposed VSLs use the same terminology as used in the associated requirement and are, therefore, consistent with the requirement.
FERC VSL G4 Violation Severity Level Assignment Should Be Based on A Single Violation, Not on A Cumulative Number of Violations	Each VSL is based on a single violation and not cumulative violations.

VRF Justifications for CIP-014-4, Requirement R3	
Proposed VRF	**High**
NERC VRF Discussion	A VRF of higher is appropriate because the requirement, if violated, could directly cause or contribute to BES instability, separation, or a cascading sequence of failures, or could place the BES at an unacceptable risk of instability, separation, or cascading failures.
FERC VRF G1 Discussion Guideline 1- Consistency with	This VRF is consistent with the identified areas from the FERC list of critical areas in the Final Blackout Report.

VRF Justifications for CIP-014-4, Requirement R3	
Proposed VRF	**High**
Blackout Report	
FERC VRF G2 Discussion Guideline 2- Consistency within a Reliability Standard	The VRF for Requirement R3 is consistent with those connections between the sub-Requirement VRF assignments and the main Requirement VRF assignment.
FERC VRF G3 Discussion Guideline 3- Consistency among Reliability Standards	This VRF is consistent with other VRFs that address similar reliability goals in different Reliability Standards.
FERC VRF G4 Discussion Guideline 4- Consistency with NERC Definitions of VRFs	This VRF is consistent with the definition of a High VRF requirement per the criteria filed with FERC as part of the ERO's Sanctions Guidelines.
FERC VRF G5 Discussion Guideline 5- Treatment of Requirements that Co-mingle More than One Obligation	This requirement does mingle a higher risk reliability objective and risk reliability objective. Therefore, the VRF reflects the risk of the whole requirement.

VSLs for CIP-014-4, Requirement R3			
Lower	**Moderate**	**High**	**Severe**
N/A	The Transmission Owner has a risk assessment methodology that failed to include one of the requirements listed in Parts 3.1 through 3.3.	The Transmission Owner has a risk assessment methodology that failed to include two of the requirements listed in Parts 3.1 through 3.3.	The Transmission Owner has a risk assessment methodology that failed to include all three of the requirements listed in Parts 3.1 through 3.3. OR The Transmission Owner does not

			have a risk assessment methodology.

VSL Justifications for CIP-014-4, Requirement R3	
FERC VSL G1 Violation Severity Level Assignments Should Not Have the Unintended Consequence of Lowering the Current Level of Compliance	The proposed VSLs do not have the unintended consequence of lowering the level of compliance.
FERC VSL G2 Violation Severity Level Assignments Should Ensure Uniformity and Consistency in the Determination of Penalties Guideline 2a: The Single Violation Severity Level Assignment Category for "Binary" Requirements Is Not Consistent Guideline 2b: Violation Severity Level Assignments that Contain Ambiguous Language	The proposed VSLs are not binary and do not use any ambiguous terminology, thereby supporting uniformity and consistency in the determination of similar penalties for similar violations.
FERC VSL G3 Violation Severity Level Assignment Should Be Consistent with the Corresponding Requirement	The proposed VSLs use the same terminology as used in the associated requirement and are, therefore, consistent with the requirement.
FERC VSL G4 Violation Severity Level Assignment Should Be Based on A Single	Each VSL is based on a single violation and not cumulative violations.

VSL Justifications for CIP-014-4, Requirement R3	
Violation, Not on A Cumulative Number of Violations	

VRF Justifications for CIP-014-4, Requirement R4	
Proposed VRF	**Medium**
NERC VRF Discussion	A VRF of Medium is appropriate because, if violated, it could directly affect the electrical state or the capability of the BES, or the ability to effectively monitor and control the BES; however, a violation is unlikely to lead to BES instability, separation, or cascading failures.
FERC VRF G1 Discussion Guideline 1- Consistency with Blackout Report	This VRF is consistent with the identified areas from the FERC list of critical areas in the Final Blackout Report.
FERC VRF G2 Discussion Guideline 2- Consistency within a Reliability Standard	The VRF for Requirement R4 is consistent with those connections between the sub-Requirement VRF assignments and the main Requirement VRF assignment.
FERC VRF G3 Discussion Guideline 3- Consistency among Reliability Standards	This VRF is consistent with other VRFs that address similar reliability goals in different Reliability Standards.
FERC VRF G4 Discussion Guideline 4- Consistency with NERC Definitions of VRFs	This VRF is consistent with the definition of a Medium VRF requirement per the criteria filed with FERC as part of the ERO's Sanctions Guidelines.
FERC VRF G5 Discussion Guideline 5- Treatment of Requirements that Co-mingle More	This requirement does not mingle a higher risk reliability objective and a lesser risk reliability objective. Therefore, the VRF reflects the risk of the whole requirement.

VRF Justifications for CIP-014-4, Requirement R4	
Proposed VRF	**Medium**
than One Obligation	

VSLs for CIP-014-4, Requirement R4			
Lower	**Moderate**	**High**	**Severe**
The Transmission Owner with applicable Transmission station(s) and Transmission substation(s) identified in Requirement R1 owned by multiple Transmission Owners failed to coordinate with each appropriate Transmission Owner(s) to determine and document their individual and joint responsibilities for documenting a risk assessment methodology under Requirement R3 and for performing any required risk assessments per Requirement R5 for less than or equal to 25% of jointly owned applicable Transmission station(s) and Transmission substation(s).	The Transmission Owner with applicable Transmission station(s) and Transmission substation(s) identified in Requirement R1 owned by multiple Transmission Owners failed to coordinate with each appropriate Transmission Owner(s) to determine and document their individual and joint responsibilities for documenting a risk assessment methodology under Requirement R3 and for performing any required risk assessments per Requirement R5 for more than 25% and less than or equal to 50% of jointly owned applicable Transmission station(s) and Transmission substation(s).	The Transmission Owner with applicable Transmission station(s) and Transmission substation(s) identified in Requirement owned by multiple Transmission Owners failed to coordinate with each appropriate Transmission Owner(s) to determine and document their individual and joint responsibilities for documenting a risk assessment methodology under Requirement R3 and for performing any required risk assessments per Requirement R5 for more than 50% and less than or equal to 75% of jointly owned applicable Transmission station(s) and Transmission substation(s).	The Transmission Owner with applicable Transmission station(s) and Transmission substation(s) identified in Requirement R1 owned by multiple Transmission Owners failed to coordinate with each appropriate Transmission Owner(s) to determine and document their individual and joint responsibilities for documenting a risk assessment methodology under Requirement R3 and for performing any required risk assessments per Requirement R5 for more than 75% and less than or equal to 100% of jointly owned applicable Transmission station(s) and Transmission substation(s).

VSL Justifications for CIP-014-4, Requirement R4	
FERC VSL G1 Violation Severity Level Assignments Should Not Have the Unintended Consequence of Lowering the Current Level of Compliance	The proposed VSLs do not have the unintended consequence of lowering the level of compliance.
FERC VSL G2 Violation Severity Level Assignments Should Ensure Uniformity and Consistency in the Determination of Penalties Guideline 2a: The Single Violation Severity Level Assignment Category for "Binary" Requirements Is Not Consistent Guideline 2b: Violation Severity Level Assignments that Contain Ambiguous Language	The proposed VSLs are not binary and do not use any ambiguous terminology, thereby supporting uniformity and consistency in the determination of similar penalties for similar violations.
FERC VSL G3 Violation Severity Level Assignment Should Be Consistent with the Corresponding Requirement	The proposed VSLs use the same terminology as used in the associated requirement and are, therefore, consistent with the requirement.
FERC VSL G4 Violation Severity Level Assignment Should Be Based on A Single Violation, Not on A Cumulative Number of Violations	Each VSL is based on a single violation and not cumulative violations.

VRF Justifications for CIP-014-4, Requirement R5	
Proposed VRF	**High**
NERC VRF Discussion	The VRF for this new Requirement R5 remains High because it is one of the two sub-Requirements of Requirement R1 from the previously FERC approved CIP-014-3 Reliability Standard.
FERC VRF G1 Discussion Guideline 1- Consistency with Blackout Report	This VRF is consistent with the identified areas from the FERC list of critical areas in the Final Blackout Report.
FERC VRF G2 Discussion Guideline 2- Consistency within a Reliability Standard	The VRF for Requirement R5 is consistent with those connections between the sub-Requirement VRF assignments and the main Requirement VRF assignment.
FERC VRF G3 Discussion Guideline 3- Consistency among Reliability Standards	This VRF is consistent with other VRFs that address similar reliability goals in different Reliability Standards.
FERC VRF G4 Discussion Guideline 4- Consistency with NERC Definitions of VRFs	This VRF is consistent with the definition of a High VRF requirement per the criteria filed with FERC as part of the ERO's Sanctions Guidelines.
FERC VRF G5 Discussion Guideline 5- Treatment of Requirements that Co-mingle More than One Obligation	This requirement does mingle a higher risk reliability objective and risk reliability objective. Therefore, the VRF reflects the risk of the whole requirement.

VSLs for CIP-014-4, Requirement R5			
Lower	**Moderate**	**High**	**Severe**
The Transmission Owner performed a risk assessment, but did so after 36 calendar months, but less than or equal to 38 calendar months.	The Transmission Owner performed a risk assessment, but did so after 38 calendar months, but less than or equal to 40 calendar months. OR The Transmission Owner performed a risk assessment inconsistent with one of the methodology requirements listed in Requirement R3, Parts 3.1 through 3.3.	The Transmission Owner performed a risk assessment, but did so after 40 calendar months, but less than or equal to 42 calendar months. OR The Transmission Owner performed a risk assessment inconsistent with two of the methodology requirements listed in Requirement R3, Parts 3.1 through 3.3. OR The Transmission Owner performed a risk assessment, but failed to include the primary control center identified in Part 5.2.	The Transmission Owner performed a risk assessment, but did so after more than 42 calendar months. OR The Transmission Owner performed a risk assessment inconsistent with all three of the methodology requirements listed in Requirement R3, Parts 3.1 through 3.3.

VSL Justifications for CIP-014-4, Requirement R5	
FERC VSL G1 Violation Severity Level Assignments Should Not Have the Unintended Consequence of Lowering the Current Level of Compliance	The proposed VSLs do not have the unintended consequence of lowering the level of compliance.
FERC VSL G2 Violation Severity Level Assignments	The proposed VSLs are not binary and do not use any ambiguous terminology, thereby supporting uniformity and consistency in the determination of similar penalties for similar violations.

VSL Justifications for CIP-014-4, Requirement R5	
Should Ensure Uniformity and Consistency in the Determination of Penalties Guideline 2a: The Single Violation Severity Level Assignment Category for "Binary" Requirements Is Not Consistent Guideline 2b: Violation Severity Level Assignments that Contain Ambiguous Language	
FERC VSL G3 Violation Severity Level Assignment Should Be Consistent with the Corresponding Requirement	The proposed VSLs use the same terminology as used in the associated requirement and are, therefore, consistent with the requirement.
FERC VSL G4 Violation Severity Level Assignment Should Be Based on A Single Violation, Not on A Cumulative Number of Violations	Each VSL is based on a single violation and not cumulative violations.

VRF Justification for CIP-014-4, Requirement R6

This Requirement is the same as Requirement R2 in CIP-014-3. The VRF did not change from the previously FERC approved CIP-014-3 Reliability Standard.

VSL Justification for CIP-014-4, Requirement R6

The Requirement is the same as Requirement R2 in the previously FERC approved CIP-014-3 Reliability Standard. The VSL did not have material changes except for the reference Requirement numbers because 5 (five) new Requirements were added.

VRF Justification for CIP-014-4, Requirement R7

This Requirement is the same as Requirement R3 in CIP-014-3. The VRF did not change from the previously FERC approved CIP-014-3 Reliability Standard.

VSL Justification for CIP-014-4, Requirement R7

The Requirement is the same as Requirement R3 in the previously FERC approved CIP-014-3 Reliability Standard. The VSL did not have material changes except for the reference Requirement numbers because 5 (five) new Requirements were added.

VRF Justification for CIP-014-4, Requirement R8

This Requirement is the same as Requirement R4 in CIP-014-3. The VRF did not change from the previously FERC approved CIP-014-3 Reliability Standard.

VSL Justification for CIP-014-4, Requirement R8

The Requirement is the same as Requirement R4 in CIP-014-3. The VSL did not have material changes from the previously FERC approved CIP-014-3 Reliability Standard except changed “Responsible Entity” to “responsible entity” and the reference Requirement numbers because 5 (five) new Requirements were added.

VRF Justification for CIP-014-4, Requirement R9

This Requirement is the same as Requirement R5 in CIP-014-3. The VRF did not change from the previously FERC approved CIP-014-3 Reliability Standard.

VSL Justification for CIP-014-4, Requirement R9

The Requirement is the same as Requirement R5 in CIP-014-3. The VSL did not have material change from the previously FERC approved CIP-014-3 Reliability Standard except changed “Responsible Entity” to “responsible entity” and the reference Requirement numbers because 5 (five) new Requirements were added.

VRF Justification for CIP-014-4, Requirement R10

This Requirement is the same as Requirement R6 in CIP-014-3. The VRF did not change from the previously FERC approved CIP-014-3 Reliability Standard.

VSL Justification for CIP-014-4, Requirement R10

VSLs for CIP-014-4, Requirement R10			
Lower	**Moderate**	**High**	**Severe**
The responsible entity had an unaffiliated third party review the evaluation performed under Requirement R8 and the security plan(s) developed under Requirement R9, but did so in more than 90 calendar days, but less than or equal to 100 calendar days. OR The responsible entity had an unaffiliated third party review the evaluation performed under Requirement R8 and the security plan(s) developed under Requirement R9 and modified or documented the reason for not modifying the security plan(s) as specified in Part 10.3, but did so more than 70 calendar days and less than or equal to 80 calendar days following completion of the third party review.	The responsible entity had an unaffiliated third party review the evaluation performed under Requirement R8 and the security plan(s) developed under Requirement R9, but did so in more than 100 calendar days, but less than or equal to 110 calendar days. OR The responsible entity had an unaffiliated third party review the evaluation performed under Requirement R8 and the security plan(s) developed under Requirement R9 and modified or documented the reason for not modifying the security plan(s) as specified in Part 10.3, but did so more than 80 calendar days following completion of the third party review. OR The responsible entity had an unaffiliated third party review the evaluation performed under Requirement R8 and the security plan(s) developed under Requirement R9, but did not document the reason for not	The responsible entity had an unaffiliated third party review the evaluation performed under Requirement R8 and the security plan(s) developed under Requirement R9, but did so more than 110 calendar days, but less than or equal to 120 calendar days. OR The responsible entity failed to have an unaffiliated third party review the evaluation performed under Requirement R8 and the security plan(s) developed under Requirement R9. OR The responsible entity had an unaffiliated third party review the evaluation performed under Requirement R8 and the security plan(s) developed under Requirement R9, but failed to implement procedures for protecting information per Part 10.4.	The responsible entity failed to have an unaffiliated third party review the evaluation performed under Requirement R8 and the security plan(s) developed under Requirement R9 in more than 120 calendar days.

	modifying the security plan(s) as specified in Part 10.3.		

VSL Justifications for CIP-014-4, Requirement R10	
FERC VSL G1 Violation Severity Level Assignments Should Not Have the Unintended Consequence of Lowering the Current Level of Compliance	This is an existing Requirement. The drafting team revised the VSL language for consistency with the proposed revisions to the standard. All of the violation severity levels stayed the same from the previously FERC-approved version
FERC VSL G2 Violation Severity Level Assignments Should Ensure Uniformity and Consistency in the Determination of Penalties Guideline 2a: The Single Violation Severity Level Assignment Category for "Binary" Requirements Is Not Consistent Guideline 2b: Violation Severity Level Assignments that Contain Ambiguous Language	The proposed VSLs are not binary and do not use any ambiguous terminology, thereby supporting uniformity and consistency in the determination of similar penalties for similar violations.
FERC VSL G3 Violation Severity Level Assignment Should Be Consistent with the Corresponding Requirement	The proposed VSLs use the same terminology as used in the associated requirement and are, therefore, consistent with the requirement.
FERC VSL G4 Violation Severity Level Assignment Should Be Based on A Single Violation, Not on A Cumulative	Each VSL is based on a single violation and not cumulative violations.

Number of Violations	

Exhibit F

Summary of Development and Complete Record of Development

Summary of Development History

The following is a summary of the development record for proposed Reliability Standard CIP-014-4, developed through Project 2023-06, CIP-014-4 Risk Assessment Refinement.

I. Overview of the Drafting Team

When evaluating a proposed Reliability Standard, the Commission is expected to give "due weight" to the technical expertise of the ERO.[1] The technical expertise of the ERO is derived from the drafting team selected to lead each project in accordance with Section 4.3 of the NERC Standard Processes Manual.[2] For this project, the drafting team consisted of industry experts, all with a diverse set of experiences. A roster of the Project 2023-06 drafting team members is included in **Exhibit G**.

II. Standard Development History

A. Project Initiation

On December 15, 2022, FERC issued an order directing NERC to evaluate the effectiveness of Reliability Standard CIP-014-3 in mitigating the risks to the Bulk-Power System ("BPS") associated with physical attacks.[3] On April 14, 2023, NERC filed the CIP-014 Report with FERC.[4] The report identified continuing inconsistency in registered entity CIP-014-3 risk assessments to most appropriately identify critical infrastructure. NERC recommended that CIP-014 be revised to assure an adequate and consistent approach in evaluating instability as well as the identification of infrastructure critical to the BPS.

B. Standards Authorization Request Development

---

1 Section 215(d)(2) of the Federal Power Act; 16 U.S.C. § 824(d)(2).

2 The NERC *Standard Processes Manual* is available at https:// https://www.nerc.com/who-we-are/rules-of-procedure.

3 *Order Directing Report*, 181 FERC ¶ 61,230 (2022).

4 *Evaluation of the Physical Security Reliability Standard and Physical Security Attacks to the Bulk-Power System,* Docket No. RD23-2-000 (Apr. 14, 2023).

At its June 21, 2023 meeting, the Standards Committee ("SC") accepted the SAR submitted by NERC staff, authorized posting of the SAR for a 30-day formal comment period, and authorized the solicitation of the standard drafting team ("SDT") members.[5] The SC appointed the drafting team at its October 18, 2023 meeting.[6] The drafting team reviewed and responded to all comments during the posting of the SAR and revisions were made to the SAR to clarify the scope of work and ensure consistent usage of terminology throughout technical studies and expectations.

On January 17, 2024, the Standards Committee accepted the revised SAR and authorized the drafting of a modified Reliability Standard.[7]

C. First Posting – Comment Period, Additional Ballot, and Initial Ballot

On May 15, 2024, the Standards Committee authorized the initial posting of proposed Reliability Standard CIP-014-4, and its associated Implementation Plan for a 45-day formal comment period.[8] The initial posting took place from May 20, 2024 through July 3, 2024, with a parallel initial ballot and non-binding poll on the Violation Risk Factors ("VRFs") and Violation Severity Levels ("VSLs") held during the last 10 days of the comment period from June 24, 2024 through July 3, 2024.[9] The initial ballot for proposed Reliability Standard CIP-014-4 received 11.67 percent approval, reaching quorum at 84.69 percent of the ballot pool, and the initial ballot for the associated Implementation Plan received 27.14 percent approval with 83.68 percent

---

[5] NERC, *Standards Committee Meeting Agenda* (June 21, 2023), Agenda Item 4, (Project CIP-014-3 Risk Assessment Refinement).

[6] NERC, *Standards Committee Meeting Agenda* (Oct. 18, 2023), Agenda Item 7, (Project 2023-06 CIP-014 Risk Assessment Refinement).

[7] NERC, *Standards Committee Meeting Agenda* (Jan. 17, 2024), Agenda Item 7, (Project 2023-06 CIP-014 Risk Assessment Refinement Standard Authorization Request).

[8] NERC, *Standards Committee Meeting Agenda* (May 15, 2024), Agenda Item 8, (Project 2023-06 CIP-014 Risk Assessment Refinement).

[9] Exhibit F, items 15, 21.

quorum.[10] The non-binding poll for the associated VRFs and VSLs received 8.09 percent supportive opinions, reaching quorum at 81.91 percent of the ballot pool.[11] There were 75 sets of responses, including comments from approximately 176 different individuals and approximately 102 companies, representing 10 industry segments.[12]

D. Second Posting – Comment Period, Additional Ballot, and Initial Ballot

The second draft of proposed Reliability Standard CIP-014-4, the associated Implementation Plan, and other associated documents were posted for a 45-day formal comment period from September 23, 2024 through November 6, 2024, with a parallel additional ballot and non-binding poll held from October 28, 2024 through November 6, 2024.[13] The additional ballot for proposed Reliability Standard CIP-014-4 received 47.37 percent approval, reaching quorum at 89.15 percent of the ballot pool, and the additional ballot for the associated Implementation Plan received 56.18 percent approval with 88.58 percent quorum.[14] The non-binding poll for the associated VRFs and VSLs received 43.01 percent supportive opinions, reaching quorum at 87.28 percent of the ballot pool.[15] There were 64 sets of responses, including comments from approximately 135 different individuals and approximately 80 companies, representing 10 industry segments.[16]

E. Third Posting – Comment Period, Additional Ballot, and Initial Ballot

The third draft of proposed Reliability Standard CIP-014-4, the associated Implementation Plan, and other associated documents were posted for a 45-day formal comment period from June

---

10 *Id.* at items 17, 19.

11 *Id.* at item 18.

12 *Id.* at item 23.

13 *Id.* at items 33, 39.

14 *Id.* at items 35, 37.

15 *Id.* at item 36.

16 *Id.* at item 41.

6, 2025 through July 21, 2025, with a parallel additional ballot and non-binding poll held from July 11, 2025 through July 21, 2025.[17] The additional ballot for proposed Reliability Standard CIP-014-4 received 57.27 percent approval, reaching quorum at 82.94 percent of the ballot pool, and the additional ballot for the associated Implementation Plan received 69.66 percent approval with 83.28 percent quorum.[18] The non-binding poll for the associated VRFs and VSLs received 55.13 percent supportive opinions, reaching quorum at 82.21 percent of the ballot pool.[19] There were 74 sets of responses, including comments from approximately 160 different people and approximately 98 companies, representing 8 industry segments.[20]

F. Fourth Posting – Comment Period, Additional Ballot, and Initial Ballot

The fourth draft of proposed Reliability Standard CIP-014-4, the associated Implementation Plan, and other associated documents were posted for a 45-day formal comment period from March 31, 2026 through May 14, 2026, with a parallel additional ballot and non-binding poll held from May 5, 2026 through May 14, 2026.[21] The additional ballot for proposed Reliability Standard CIP-014-4 received 79.21 percent approval, reaching quorum at 79.52 percent of the ballot pool, and the additional ballot for the associated Implementation Plan received 84.61 percent approval with 78.75 percent quorum.[22] The non-binding poll for the associated VRFs and VSLs received 76.97 percent supportive opinions, reaching quorum at 77.22 percent of the ballot

17 *Id.* at items 50, 56.
18 *Id.* at items 52, 53.
19 *Id.* at item 54.
20 *Id.* at item 58.
21 *Id.* at items 68, 74.
22 *Id.* at items 70, 71.

pool.[23] There were 69 sets of responses, including comments from approximately 150 different individuals and approximately 95 companies, representing 8 industry segments.[24]

G. Final Posting

Proposed Reliability Standard CIP-014-4, was posted for a 10-day final ballot period from May 28, 2026 through June 8, 2026. The final ballot for Proposed Reliability Standard CIP-014-4 reached quorum at 80.55 percent of the ballot pool, receiving support from 80.05 percent of the voters. The final ballot for the Implementation Plan reached quorum at 80.14 percent of the ballot pool, receiving support from 83.31 percent of the voters.[25]

H. Board of Trustees Adoption

The NERC Board of Trustees adopted proposed Reliability Standard CIP-014-4 on June 17, 2026.[26]

---

[23] *Id.* at item 72.
[24] *Id.* at item 76.
[25] *Id.* at items 88, 89.
[26] NERC, *Board of Trustees Mid-year Meeting* (June 17, 2026), available at https://www.nerc.com/globalassets/who-we-are/board-of-trustees/20260617_board_open_materials_package.pdf.

Complete Record of Development

Project 2023-06 CIP-014 Risk Assessment Refinement

Standards Affected: CIP-014-3

Subscribe to Project Mailing List

Status

Final ballots for **Project 2023-06 CIP-014 Risk Assessment Refinement** concluded at **8 p.m. Eastern, Monday, June 8, 2026** for the following Standard and Implementation Plan:

- **CIP-014-4 - Physical Security**
- **Implementation Plan**

The standard will be submitted to the Board of Trustees for adoption and then filed with the appropriate regulatory authorities.

Important Dates

Initial posting authorized	Back to Top	**05/15/2024**

Standard Authorization Request accepted	**01/17/2024**
Drafting Team Appointed	**10/18/2023**
Standard Authorization Request drafting authorized	**06/21/2023**

Project Details

Background

Due to an increase in reports of physical attacks on electric substations, the Federal Energy Regulatory Commission (FERC) issued the December 2022 Order in Docket No. RD23-2-000 directing NERC to evaluate the effectiveness of the Physical Security Reliability Standard CIP-014-3 in mitigating the risks to the Bulk-Power System (BPS) associated with physical attacks. In the report filed in response to a FERC directive, NERC staff identified continuing inconsistency in registered entity CIP-014-3 risk assessments to most appropriately identify critical infrastructure. FERC directed NERC to evaluate whether the physical security protection requirements in NERC's Reliability Standards are adequate to address the risks associated with physical attacks on BPS Facilities, including the adequacy of the required risk assessment in CIP-014-3 Requirement R1. In the report, NERC found that CIP-014-3 required revision to assure adequate and consistent approach in evaluating instability as well as the identification of infrastructure critical to the operation of the BPS.

Purpose

As the intent of CIP-014-3 is to identify and physically protect those Transmission stations, Transmission substations, and their associated primary control centers that are critical to the reliable and secure operation of the BPS, registered entity approaches for the risk assessment must be reasonably consistent and substantiated with sufficient technically based rationale. As highlighted in the report, there continues to be confusion within industry as to how to adequately evaluate instability. Therefore, this project includes refinement of CIP-014 risk assessments to assure critical sites are identified and physically protected.

Development History

Final Ballot
CIP-014-4

View Posting

Supporting Materials

CIP-014-4

Clean (77)

Redline to Last Posted (78)

Redline to Last Approved (79)

Implementation Plan

Clean (80)

Redline to Last Posted (81)

Technical Rationale

Clean (82)

Redline to Last Posted (83)

VRF/VSL Justifications

Clean (84)

Redline to Last Posted (85)

RSAW

RSAW (86)

Final Ballot Results 05/28/2026 - 06/08/2026

Standards Announcement (87)

CIP-014-4 Ballot Results

Quorum	Weighted Segment Value (88)
80.55	80.05

Implementation Plan Ballot Results

Quorum	Weighted Segment Value	(89)
80.14	83.31	

Non-Binding Poll Ballot Results

Quorum	Weighted Segment Value	(90)
78.29	78.31	

Formal Posting 4
CIP-014-4

View Posting

Supporting Materials

CIP-014-4

- Clean (59)
- Redline to Last Posted (60)
- Redline to Last Approved (61)

Implementation Plan

- Clean (62)
- Redline to Last Posted (63)

Additional Materials

VRF VSL Justification

- Clean (64)
- Redline to Last Posted (65)

Technical Rationale

Clean (66)

Redline to Last Posted (67)

Additional Ballots and Non-binding Poll 05/05/2026 - 05/14/2026

Standards Announcement (68)

Ballot Open Reminder (69)

CIP-014-4 Ballot Results

Quorum	Weighted Segment Value	
79.52%	79.21%	(70)

Implementation Plan Ballot Results

Quorum	Weighted Segment Value	
78.75%	84.61%	(71)

CIP-014-4 Non-binding Poll Results

Quorum	Weighted Segment Value	
77.22%	76.97%	(72)

Comment Period 03/31/2026 - 05/14/2026

Unofficial Comment Form (73)

Standards Announcement (74)

Comments Received (75)

Consideration of Comments (76)

Formal Posting 3
CIP-014-4

View Posting

Supporting Materials

CIP-014-4

- Clean (42)
- Redline to Last Posted (43)
- Redline to Last Approved (44)

Implementation Plan

- Clean (45)
- Redline to Last Posted (46)

Supporting Materials

- VRF VSL Justifications (47)

Technical Rationale

- Clean (48)
- Redline to Last Posted (49)

Additional Ballots and Non-binding Poll 07/11/2025 - 07/21/2025

- Standards Announcement (50)
- Ballots Open Reminder (51)
- CIP-014-4 Ballot Results

Quorum	Weighted Segment Value (52)
82.94%	57.27%

Implementation Plan Ballot Results

Quorum	Weighted Segment Value	
83.28%	69.66%	(53)

CIP-014-4 Non-binding Poll Results

Quorum	Weighted Segment Value	
82.21%	55.13%	(54)

Comment Period 06/06/2025 - 07/21/2025

- Unofficial Comment Form (55)
- Standards Announcement (56)
- Comments Received (57)
- Consideration of Comments (58)

Formal Posting 2
CIP-014-4

View Posting

Supporting Materials

CIP-014-4

- Clean (24)
- Redline to Last Posted (25)
- Redline to Last Approved (26)

Implementation Plan

- Clean (27)

Redline to Last Posted (28)

Supporting Materials

VRF/VSL Justification

Clean (29)

Redline to Last Posted (30)

Technical Rationale

Clean (31)

Redline to Last Posted (32)

Additional Ballots and Non-binding Poll 10/28/2024 - 11/06/2024

Ballot Open Reminder (33)

Standards Announcement (34)

CIP-014-4 Ballot Results

Quorum	Weighted Segment Value	
89.15%	47.37%	(35)

CIP-014-4 Non-binding Poll Results

Quorum	Weighted Segment Value	
87.28%	43.01%	(36)

Implementation Plan Ballot Results

Quorum	Weighted Segment Value	
88.58%	56.18%	(37)

Comment Period 09/23/2024 - 11/06/2024

Unofficial Comment Form (38)

Standards Announcement (39)

Comments Received (40)

Consideration of Comments (41)

Formal Posting 1
CIP-014-4

View Posting

Supporting Materials

CIP-014-4

Clean (10)

Redline (11)

Implementation Plan (12)

Supporting Materials

VRF/VSL Justification (13)

Technical Rationale (14)

Initial Ballots and Non-binding Poll 06/24/2024 - 07/03/2024

Ballot Open Reminder (15)

Standards Announcement (16)

CIP-014-4 Ballot Results

Quorum	Weighted Segment Value	
84.69%	11.67%	(17)

CIP-014-4 Non-binding Poll Results

Quorum	Weighted Segment Value	
81.91%	8.09%	(18)

Implementation Plan Ballot Results

Quorum	Weighted Segment Value	
83.68%	27.14%	(19)

Comment Period 05/20/2024 - 07/03/2024

- Unofficial Comment Form (20)
- Standards Announcement (21)
- Comments Received (22)
- Consideration of Comments (23)

Join Ballot Pools 05/20/2024 - 06/18/2024

Standard Authorization Request - SC Accepted View Posting

The Standards Committee accepted the SAR on January 17, 2024

Supporting Materials

- Clean (8)
- Redline (9)

SAR Comment Period

View Posting

Supporting Materials

Standard Authorization Request (SAR) (3)

Comment Period 07/26/2023 - 08/24/2023

Unofficial Comment Form (4)

Standards Announcement (5)

Comments Received (6)

Consideration of Comments (7)

Tab

Import

Projec

Develo

Nominations

View Posting

Nomination Period 07/26/2023 - 08/24/2023

Unofficial Nomination Form (1)

Standards Announcement (2)

NERC

Washington Office
1401 H Street NW
Suite 410
Washington, DC 20005

202-400-3000

Copyright © 2026 North American Electric Reliability Corporation. All rights reserved.

Unofficial Nomination Form

Project 2023-06 CIP-014 Risk Assessment Refinement

Do not use this form for submitting nominations. Use the electronic form to submit nominations for **Project 2023-06 CIP-014 Risk Assessment Refinement** drafting team members by **8 p.m. Eastern, Thursday, August 24, 2023.** This unofficial version is provided to assist nominees in compiling the information necessary to submit the electronic form.

Additional information about this project is available on the project page. If you have questions, contact Manager of Standards Development, Jamie Calderon (via email), or at 404-446-9647.

Background

Due to an increase in reports of physical attacks on electric substations, the Federal Energy Regulatory Commission (FERC) issued the December 2022 Order in Docket No. RD23-2-000 directing NERC to evaluate the effectiveness of the Physical Security Reliability Standard CIP-014-3 in mitigating the risks to the Bulk-Power System (BPS) associated with physical attacks. In the report filed in response to a FERC directive, NERC staff identified continuing inconsistency in registered entity CIP-014-3 risk assessments to most appropriately identify critical infrastructure. FERC directed NERC to evaluate whether the physical security protection requirements in NERC's Reliability Standards are adequate to address the risks associated with physical attacks on BPS Facilities, including the adequacy of the required risk assessment in CIP-014-3 Requirement R1. In the report, NERC found that CIP-014-3 required revision to assure adequate and consistent approach in evaluating instability as well as the identification of infrastructure critical to the operation of the BPS.

Standard(s) affected: CIP-014-3

Previous drafting or review team experience is beneficial, but not required. A brief description of the desired qualifications, expected commitment, and other pertinent information is included below. By submitting a nomination form, you are indicating your willingness and agreement to actively participate in face-to-face meetings and conference calls.

NERC is seeking individuals who possess experience in CIP-014 Risk Assessments including Transmission Owners and Transmission Operators.

The time commitment for these projects is expected to be up to two face-to-face meetings per quarter (on average two full working days each meeting) with conference calls scheduled as needed to meet the agreed-upon timeline the review or drafting team sets forth. Team members may also have side projects, either individually or by subgroup, to present to the larger team for discussion and review. Lastly, an important component of the review and drafting team effort is outreach. Members of the team will be expected to conduct industry outreach during the development process to support a successful project outcome.

Name:	
Organization:	
Address:	
Telephone:	
E-mail:	

Please briefly describe your experience and qualifications to serve on the requested Standard Drafting Team (Bio):

If you are currently a member of any NERC drafting team, please list each team here:

☐ Not currently on any active SAR or standard drafting team.

☐ Currently a member of the following SAR or standard drafting team(s):

If you previously worked on any NERC drafting team please identify the team(s):

☐ No prior NERC SAR or standard drafting team.

☐ Prior experience on the following team(s):

Acknowledgement that the nominee has read and understands both the *NERC Participant Conduct Policy* and the *Standard Drafting Team Scope* documents, available on NERC Standards Resources.

☐ Yes, the nominee has read and understands these documents.

Select each NERC Region in which you have experience relevant to the Project for which you are volunteering:

☐ MRO ☐ NPCC ☐ RF	☐ SERC ☐ Texas RE ☐ WECC	☐ NA – Not Applicable

Select each Industry Segment that you represent:	
☐	1 — Transmission Owners
☐	2 — RTOs, ISOs
☐	3 — Load-serving Entities
☐	4 — Transmission-dependent Utilities
☐	5 — Electric Generators
☐	6 — Electricity Brokers, Aggregators, and Marketers
☐	7 — Large Electricity End Users
☐	8 — Small Electricity End Users
☐	9 — Federal, State, and Provincial Regulatory or other Government Entities
☐	10 — Regional Reliability Organizations and Regional Entities
☐	NA – Not Applicable

Select each Function in which you have current or prior expertise:	
☐ Balancing Authority	☐ Transmission Operator
☐ Compliance Enforcement Authority	☐ Transmission Owner
☐ Distribution Provider	☐ Transmission Planner
☐ Generator Operator	☐ Transmission Service Provider
☐ Generator Owner	☐ Purchasing-selling Entity
☐ Interchange Authority	☐ Reliability Coordinator
☐ Load-serving Entity	☐ Reliability Assurer
☐ Market Operator	☐ Resource Planner
☐ Planning Coordinator	

Provide the names and contact information for two references who could attest to your technical qualifications and your ability to work well in a group:			
Name:		Telephone:	
Organization:		E-mail:	
Name:		Telephone:	
Organization:		E-mail:	
Provide the name and contact information of your immediate supervisor or a member of your management who can confirm your organization's willingness to support your active participation.			
Name:		Telephone:	
Title:		Email:	

NERC
NORTH AMERICAN ELECTRIC RELIABILITY CORPORATION

Standards Announcement

Project 2023-06 CIP-014 Risk Assessment Refinement

Drafting Team Nomination Period Open through August 24, 2023

Now Available

Nominations are being sought for **Project 2023-06 CIP-014 Risk Assessment Refinement** drafting team members by **8 p.m. Eastern, Thursday, August 24, 2023**.

Use the electronic form to submit a nomination. Contact Wendy Muller regarding issues using the electronic form. The unofficial Word version of the nomination form is posted on the Standard Drafting Team Vacancies page and the project page.

Previous drafting or review team experience is beneficial, but not required. A brief description of the desired qualifications, expected commitment, and other pertinent information is included below and on the project page. By submitting a nomination form, you are indicating your willingness and agreement to actively participate in face-to-face meetings and conference calls.

NERC is seeking individuals who possess experience in CIP-014 Risk Assessments including Transmission Owners and Transmission Operators.

The time commitment for these projects is expected to be up to two face-to-face meetings per quarter (on average two full working days each meeting) with conference calls scheduled as needed to meet the agreed-upon timeline the review or drafting team sets forth. Team members may also have side projects, either individually or by subgroup, to present to the larger team for discussion and review. Lastly, an important component of the review and drafting team effort is outreach. Members of the team will be expected to conduct industry outreach during the development process to support a successful project outcome.

Next Steps

The Standards Committee is expected to appoint members to the drafting team in September 2023. Nominees will be notified shortly after they have been appointed.

For information on the Standards Development Process, refer to the Standard Processes Manual.

For more information or assistance, contact Manager of Standards Development, Jamie Calderon (via email) or at 404-446-9647. Subscribe to this project's observer mailing list by selecting "NERC Email Distribution Lists" from the "Service" drop-down menu and specify “Project 2023-06 CIP-014 observer list” in the Description Box.

North American Electric Reliability Corporation
3353 Peachtree Rd, NE
Suite 600, North Tower
Atlanta, GA 30326
404-446-2560 | www.nerc.com

NERC
NORTH AMERICAN ELECTRIC RELIABILITY CORPORATION

Standard Authorization Request (SAR)

Complete and submit this form, with attachment(s) to the NERC Help Desk. Upon entering the Captcha, please type in your contact information, and attach the SAR to your ticket. Once submitted, you will receive a confirmation number which you can use to track your request.

The North American Electric Reliability Corporation (NERC) welcomes suggestions to improve the reliability of the bulk power system through improved Reliability Standards.

Requested information			
SAR Title:	CIP-014-3 Risk Assessment Refinement		
Date Submitted:	05/18/23		
SAR Requester			
Name:	Jamie Calderon, NERC J.P. Skeath, NERC		
Organization:	NERC		
Telephone:	Jamie – 404-406-9647 J.P – 404-446-9630	Email:	Jamie – Jamie.Calderon@nerc.net J.P. – John.Skeath@nerc.net
SAR Type (Check as many as apply)			
☐ New Standard ☒ Revision to Existing Standard ☐ Add, Modify or Retire a Glossary Term ☐ Withdraw/retire an Existing Standard		☐ Imminent Action/ Confidential Issue (SPM Section 10) ☐ Variance development or revision ☐ Other (Please specify)	
Justification for this proposed standard development project (Check all that apply to help NERC prioritize development)			
☒ Regulatory Initiation ☐ Emerging Risk (Reliability Issues Steering Committee) Identified ☐ Reliability Standard Development Plan		☐ NERC Standing Committee Identified ☐ Enhanced Periodic Review Initiated ☐ Industry Stakeholder Identified	
Industry Need (What Bulk Electric System (BES) reliability benefit does the proposed project provide?):			
In the NERC report[1] filed in response to a FERC directive[2], NERC staff identified continuing inconsistency in registered entity CIP-014-3 risk assessments to most appropriately identify critical infrastructure. The Commission directed NERC to evaluate whether the physical security protection requirements in NERC's Reliability Standards are adequate to address the risks associated with physical attacks on Bulk Power System (BPS) Facilities, including the adequacy of the required risk assessment in CIP-014-3 Requirement R1. In the report, NERC found that CIP-014-3 required revision to assure adequate and consistent approach in evaluating instability as well as the identification of infrastructure critical to the operation of the BPS.			

[1] https://www.nerc.com/FilingsOrders/us/NERC%20Filings%20to%20FERC%20DL/NERC%20Report%20on%20CIP-014-3.pdf; April 14, 2023

[2] Due to an increase in reports of physical attacks on electric substations, the Federal Energy Regulatory Commission issued the December 2022 Order in Docket No. RD23-2-000 directing NERC to evaluate the effectiveness of the Physical Security Reliability Standard CIP-014-3 in mitigating the risks to the Bulk-Power System ("BPS") associated with physical attacks.

Requested information

As detailed in the report, NERC found that the CIP-014-3 risk assessment should be refined to ensure that entities conduct effective risk assessments of their applicable substations. The report indicates that while the overall objective of the risk assessment is sound, there are inconsistent approaches to performing the risk assessment. The requirement language within CIP-014-3 does not prescribe a specific method for how each risk assessment shall be performed. As such, specific components that comprise any supporting analytics are neither defined nor listed. As written, CIP-014-3 provides intentional flexibility for various approaches to the risk assessment due to expected differences in each registered entity's facts and circumstances. [3] However, NERC finds that flexibility does not alter the intent of CIP-014-3's that each risk assessment must be "designed to identify" which applicable Transmission station(s) and Transmission substation(s), that if rendered inoperable or damaged, could result in instability, uncontrolled separation, or Cascading within an Interconnection. Registered entities may implement different approaches to complete this objective, but the approach must be able to accomplish the fundamental obligation of the requirement through effectively assessing all required adverse system conditions with sufficient supporting technical analyses.

Further, the ERO Enterprise has observed that, in certain instances, registered entities failed to provide sufficient technical studies or justification for study decisions; resulting in risk assessments that did not demonstrate effective evaluations for instability, uncontrolled separation, or Cascading. In other instances, registered entities argued against adequately studying for instability for all applicable sites in the risk assessment while citing the language of CIP-014-3 Requirement R1 and the lack of specificity regarding dynamic studies. NERC determined that inconsistent approaches in performing risk assessments is largely due to a lack of specificity in the requirement language as to the nature and parameters of the risk assessment.

Purpose or Goal (How does this proposed project provide the reliability-related benefit described above?):

As the intent of CIP-014-3 is to identify and physically protect those Transmission stations, Transmission substations, and their associated primary control centers that are critical to the reliable and secure operation of the BPS, registered entity approaches for the risk assessment must be reasonably consistent and substantiated with sufficient technically based rationale. As highlighted in the report, there continues to be confusion within industry as to how to adequately evaluate instability. Therefore, this SAR proposes refinement of the risk assessment to assure critical sites are identified and physically protected.

The goal of this SAR is for the drafting team to modify risk assessment requirement(s) within CIP-014-3 to provide specificity regarding acceptable approaches to the risk assessment including appropriateness of models, study types, study parameters, documentation of criteria, and documentation of supporting technical rationale. These proposed revisions to CIP-014-3 will assure an adequate and consistent

[3] NERC has provided guidance to Compliance Monitoring and Enforcement staff to aid in review of entity risk assessment methods due to the inherent flexibility. Available here: https://www.nerc.com/pa/comp/guidance/CMEPPracticeGuidesDL/CMEP%20Practice%20Guide%20CIP-014-3%20R1.pdf.

Requested information
approach in evaluating instability and the identification of critical Transmission stations, Transmission substations, and their associated primary control centers.
Project Scope (Define the parameters of the proposed project):
The SDT should revise CIP-014-3's to: 1. Clarify the risk assessment methods for studying instability, uncontrolled separation, and Cascading. The methods should account for dynamic studies evaluating the possibility of transient instability. 2. Revise the risk assessment and clarify the case(s) used for the assessment to be tailored to the Requirement R1 in-service window and correct any discrepancies between the study period, frequency of study, and the base case(s) a Transmission Owner uses. 3. Revise the risk assessment to assure the adequacy and consistent implementation of technically supportive rationales, justification, and study decisions. Clarity should include specificity regarding the documentation, posting, and usage of criteria to identify instability, uncontrolled separation, or Cascading occur as part of a risk assessment. 4. Revise the risk assessment to simulate the complete loss of a Transmission station or Transmission substation that includes the simultaneous loss of all station elements and does not rely on local system protection for relay clearance. 5. Revise the risk assessment and clarify how to account for adjacent Transmission stations or Transmission substations of differing ownership as well as for those Transmission stations or Transmission substations within line-of-sight to each other.
Detailed Description (Describe the proposed deliverable(s) with sufficient detail for a drafting team to execute the project. If you propose a new or substantially revised Reliability Standard or definition, provide: (1) a technical justification[4] which includes a discussion of the reliability-related benefits of developing a new or revised Reliability Standard or definition, and (2) a technical foundation document (*e.g.,* research paper) to guide development of the Standard or definition):
Each item from the above proposed scope is substantiated further in the NERC report.[5] The main details for each are outlined as follows: 1. **Clarity should be added to the risk assessment to assure that instability is fully studied and that professional judgment assumptions are based on investigation of instability. This revision should not preclude entities from only conducting an evaluation for long-term studies (e.g., steady-state) or from only conducting dynamic simulations in some instances (e.g., not requiring additional study types once a site is already identified as critical). As such, the revision should outline technical supporting expectations to clearly identify when an Applicable substation has not demonstrated any form of instability. At a minimum, this revision should include specificity regarding the inclusion of transient dynamic studies to evaluate conditions of the BPS.**

[4] The NERC Rules of Procedure require a technical justification for new or substantially revised Reliability Standards. Please attach pertinent information to this form before submittal to NERC.
[5] https://www.nerc.com/FilingsOrders/us/NERC%20Filings%20to%20FERC%20DL/NERC%20Report%20on%20CIP-014-3.pdf

Requested information

Power system stability is generally discussed as a singular concept but can be analyzed through multiple paradigms. Thus, stability can be broken down into distinct sub-categories on time frame (e.g., short-term vs. long-term) or types (e.g., frequency or rotor angle). To ensure that no instability occurs in simulation, registered entities can cover each broad type of stability analysis via Contingency analysis, governor power flow analysis, and transient stability analysis.

2. **Revisions to the risk assessment should be made to only include transmission and generation projects that are appropriate to the periodicity of the entity's risk assessment studies. Determinations of appropriateness should be clarified and consider align study periods, frequency of studies, and the power flow models used.**

   For instance, an entity that had previously identified a CIP-014 critical site and the periodicity of the risk assessment is at least once every 30 months (per the current Standard), it would not be appropriate from a technical standpoint to include projects that will not be in service by the time the next risk assessment is scheduled to be performed. If this entity includes projects like new generation or new transmission lines that are not projected to be in service by the time of the next risk assessment, the risk assessment results may obscure how the system would electrically respond during the time period of the risk assessment.

3. **Revisions to the risk assessment should be made to assure the development and documentation of technically supportive rationales, justification, and study decisions to provide greater assurance of risk assessment adequacy and consistency. Criteria should include defining "inoperable" or "damaged" substations such that the intent of the risk assessment is clear.**

   The risk assessment must consist of a transmission analysis or transmission analyses designed to identify the Transmission station(s) and Transmission substation(s) that if rendered inoperable or damaged could result in instability, uncontrolled separation, or Cascading within an Interconnection. However, there is currently no requirement to include documentation of criteria, parameters, and study decisions or assumptions made that would demonstrate the consistent application of a study method.

4. **The risk assessment should be revised to clarify what study scenario(s) and other study assumptions (such as use of delayed clearing) are appropriate and reasonable considering the intent of CIP-014-3 and the potential range of issues during a physical attack.**

   There is no specific threat or physical attack identified in the Standard to be evaluated against. Nor is there a timeline for such a physical event provided to be studied against, such as within dynamic studies. Collaboration with ERO stakeholders have identified that while flexibility covers instances of high stress on the in-scope substations, it is not clear that the risk assessment requires registered entities to use models that correlate to periods of high flows or high stress on their system. NERC has verified during multiple oversight activities that registered entities often do not study a more severe failure which introduces risk from attacks intentionally conducted during stressed periods. Many registered entities have found that the term "inoperable" includes the total loss of communication and protection equipment at the substation, necessitating delayed

Requested information
clearance from far-end relaying to isolate the event's impacts. However, the assumption of loss of local protection equipment is not consistently implemented. 5. **The risk assessment should be revised to provide clear expectations regarding the inclusion of physically adjacent elements for the purpose of evaluating the impact from a physical attack.** The CIP-014-3 risk assessment differs from other transmission planning studies in that the registered entity must consider physical proximity regardless of electrical connection, as the risk assessment requires the entire transmission station to be considered as rendered inoperable or damaged as the result of physical attack rather than just particular elements electrically connected to a single electrical disturbance. There is no clarity on the scope of what physically adjacent elements shall be considered within the risk assessment. Some items that are commonly considered to outline this problem: line-of-sight between different substation yards for a single studied site, ease of access from a common public roadway that exists between all of the substation yards, if substation yards are in close enough proximity that a single event can impact both substations (e.g., the debris field from an incendiary device set off at one yard will impact the other yard), etc.
Cost Impact Assessment, if known (Provide a paragraph describing the potential cost impacts associated with the proposed project):
The cost impacts for the proposed changes to CIP-014-3 are expected to be minimal. The changes add clarity to the current Standard to bring consistency and clarify expectations for effectively evaluating for instability, uncontrolled separation, and Cascading following a physical attack. The upper limit of cost added to entities is bounded due to no alteration of applicable substations potentially receiving security control upgrades. Rather, the cost incurred will be on the additions of study rigor, which again are anticipated to be relatively minimal.
Please describe any unique characteristics of the BES facilities that may be impacted by this proposed standard development project (*e.g.*, Dispersed Generation Resources):
None.
To assist the NERC Standards Committee in appointing a drafting team with the appropriate members, please indicate to which Functional Entities the proposed standard(s) should apply (*e.g.*, Transmission Operator, Reliability Coordinator, etc. See the most recent version of the NERC Functional Model for definitions):
Transmission Owners, Transmission Operators
Do you know of any consensus building activities[6] in connection with this SAR? If so, please provide any recommendations or findings resulting from the consensus building activity.
None.
Are there any related standards or SARs that should be assessed for impact as a result of this proposed project? If so, which standard(s) or project number(s)?
Project 2021-03 SAR – Modifications to CIP-002 and CIP-014. Project 2021-03 is reviewing the applicability of Facilities identified by the RC as critical to the derivation of IROLs in CIP-014.

[6] Consensus building activities are occasionally conducted by NERC and/or project review teams. They typically are conducted to obtain industry inputs prior to proposing any standard development project to revise, or develop a standard or definition.

Requested information
Are there alternatives (e.g., guidelines, white paper, alerts, etc.) that have been considered or could meet the objectives? If so, please list the alternatives.
None.

Reliability Principles	
Does this proposed standard development project support at least one of the following Reliability Principles (Reliability Interface Principles)? Please check all those that apply.	
☒	1. Interconnected bulk power systems shall be planned and operated in a coordinated manner to perform reliably under normal and abnormal conditions as defined in the NERC Standards.
☐	2. The frequency and voltage of interconnected bulk power systems shall be controlled within defined limits through the balancing of real and reactive power supply and demand.
☐	3. Information necessary for the planning and operation of interconnected bulk power systems shall be made available to those entities responsible for planning and operating the systems reliably.
☐	4. Plans for emergency operation and system restoration of interconnected bulk power systems shall be developed, coordinated, maintained and implemented.
☐	5. Facilities for communication, monitoring and control shall be provided, used and maintained for the reliability of interconnected bulk power systems.
☐	6. Personnel responsible for planning and operating interconnected bulk power systems shall be trained, qualified, and have the responsibility and authority to implement actions.
☒	7. The security of the interconnected bulk power systems shall be assessed, monitored and maintained on a wide area basis.
☒	8. Bulk power systems shall be protected from malicious physical or cyber attacks.

Market Interface Principles	
Does the proposed standard development project comply with all of the following Market Interface Principles?	Enter (yes/no)
1. A reliability standard shall not give any market participant an unfair competitive advantage.	Yes
2. A reliability standard shall neither mandate nor prohibit any specific market structure.	Yes
3. A reliability standard shall not preclude market solutions to achieving compliance with that standard.	Yes
4. A reliability standard shall not require the public disclosure of commercially sensitive information. All market participants shall have equal opportunity to access commercially non-sensitive information that is required for compliance with reliability standards.	Yes

Identified Existing or Potential Regional or Interconnection Variances	
Region(s)/ Interconnection	Explanation
n/a	n/a

For Use by NERC Only

SAR Status Tracking (Check off as appropriate).	
☐ Draft SAR reviewed by NERC Staff ☐ Draft SAR presented to SC for acceptance ☐ DRAFT SAR approved for posting by the SC	☐ Final SAR endorsed by the SC ☐ SAR assigned a Standards Project by NERC ☐ SAR denied or proposed as Guidance document

Version History

Version	Date	Owner	Change Tracking
1	June 3, 2013		Revised
1	August 29, 2014	Standards Information Staff	Updated template
2	January 18, 2017	Standards Information Staff	Revised
2	June 28, 2017	Standards Information Staff	Updated template
3	February 22, 2019	Standards Information Staff	Added instructions to submit via Help Desk
4	February 25, 2020	Standards Information Staff	Updated template footer

NERC
NORTH AMERICAN ELECTRIC RELIABILITY CORPORATION

Unofficial Comment Form

Project 2023-06 CIP-014 Risk Assessment Refinement Standard Authorization Request

Do not use this form for submitting comments. Use the Standards Balloting and Commenting System (SBS) to submit comments on the **Project 2023-06 CIP-014 Risk Assessment Refinement Standard Authorization Request (SAR)** by **8 p.m. Eastern, Thursday, August 24, 2023.**

Additional information is available on the project page. If you have questions, contact Manager of Standards Development, Jamie Calderon (via email), or at 404-446-9647.

Background Information

Due to an increase in reports of physical attacks on electric substations, the Federal Energy Regulatory Commission (FERC) issued the December 2022 Order in Docket No. RD23-2-000 directing NERC to evaluate the effectiveness of the Physical Security Reliability Standard CIP-014-3 in mitigating the risks to the Bulk-Power System (BPS) associated with physical attacks. In the report filed in response to a FERC directive, NERC staff identified continuing inconsistency in registered entity CIP-014-3 risk assessments to most appropriately identify critical infrastructure. FERC directed NERC to evaluate whether the physical security protection requirements in NERC's Reliability Standards are adequate to address the risks associated with physical attacks on BPS Facilities, including the adequacy of the required risk assessment in CIP-014-3 Requirement R1. In the report, NERC found that CIP-014-3 required revision to assure adequate and consistent approach in evaluating instability as well as the identification of infrastructure critical to the operation of the BPS.

Questions

1. Do you agree with the proposed scope as described in the Project 2023-06 SAR? If you do not agree, or if you agree but have comments or suggestions for the project scope please provide your recommendation and explanation.

   ☐ Yes
   ☐ No

   Comments:

2. Provide any additional comments for the SAR drafting team to consider, if desired.

   Comments:

NERC
NORTH AMERICAN ELECTRIC RELIABILITY CORPORATION

Standards Announcement

Project 2023-06 CIP-014 Risk Assessment Refinement Standard Authorization Request

Formal Comment Period Open through August 24, 2023

Now Available

A formal comment period for the **Project 2023-06 CIP-014 Risk Assessment Refinement Standard Authorization Request (SAR)** is open through **8 p.m. Eastern, Thursday, August 24, 2023**.

Commenting

Use the Standards Balloting and Commenting System (SBS) to submit comments. An unofficial Word version of the comment form is posted on the project page.

- *Contact NERC IT support directly at https://support.nerc.net/ (Monday – Friday, 8 a.m. - 5 p.m. Eastern) for problems regarding accessing the SBS due to a forgotten password, incorrect credential error messages, or system lock-out.*
- *Passwords expire every **6 months** and must be reset.*
- *The SBS **is not** supported for use on mobile devices.*
- *Please be mindful of ballot and comment period closing dates. We ask to **allow at least 48 hours** for NERC support staff to assist with inquiries. Therefore, it is recommended that users try logging into their SBS accounts **prior to the last day** of a comment/ballot period.*

Next Steps

The drafting team will review all responses received during the comment period and determine the next steps of the project.

For information on the Standards Development Process, refer to the Standard Processes Manual.

For more information or assistance, contact Manager of Standards Development, Jamie Calderon (via email) or at 404-446-9647. Subscribe to this project's observer mailing list by selecting "NERC Email Distribution Lists" from the "Service" drop-down menu and specify “Project 2023-06 CIP-014 observer list” in the Description Box.

North American Electric Reliability Corporation
3353 Peachtree Rd, NE
Suite 600, North Tower
Atlanta, GA 30326
404-446-2560 | www.nerc.com

Comment Report

Project Name:	2023-06 CIP-014 Risk Assessment Refinement | Standard Authorization Request
Comment Period Start Date:	7/26/2023
Comment Period End Date:	8/24/2023
Associated Ballots:	

There were 43 sets of responses, including comments from approximately 117 different people from approximately 92 companies representing 10 of the Industry Segments as shown in the table on the following pages.

Questions

1. Do you agree with the proposed scope as described in the Project 2023-06 CIP-014 SAR? If you do not agree, or if you agree but have comments or suggestions for the project scope please provide your recommendation and explanation.

2. Provide any additional comments for the SAR drafting team to consider, if desired.

Organization Name	Name	Segment(s)	Region	Group Name	Group Member Name	Group Member Organization	Group Member Segment(s)	Group Member Region
Midcontinent ISO, Inc.	Bobbi Welch	2	MRO,RF,SERC	ISO/RTO Council Standards Review Committee 2023-06 CIP-014 Risk Assessment SAR	Kennedy Meier	Electric Reliability Council of Texas, Inc.	2	Texas RE
					Bobbi Welch	MISO	2	RF
					Gregory Campoli	New York Independent System Operator	2	NPCC
					Elizabeth Davis	PJM	2	RF
					Charles Yeung	SPP	2	MRO
Tacoma Public Utilities (Tacoma, WA)	Jennie Wike	1,3,4,5,6	WECC	Tacoma Power	Jennie Wike	Tacoma Public Utilities	1,3,4,5,6	WECC
					John Merrell	Tacoma Public Utilities (Tacoma, WA)	1	WECC
					John Nierenberg	Tacoma Public Utilities (Tacoma, WA)	3	WECC
					Hien Ho	Tacoma Public Utilities (Tacoma, WA)	4	WECC
					Terry Gifford	Tacoma Public Utilities (Tacoma, WA)	6	WECC
					Ozan Ferrin	Tacoma Public Utilities (Tacoma, WA)	5	WECC
ACES Power Marketing	Jodirah Green	1,3,4,5,6	MRO,RF,SERC,Texas RE,WECC	ACES Collaborators	Bob Soloman	Hoosier Energy Electric Cooperative	1	RF
					Jennifer Bray	Arizona Electric Power Cooperative, Inc.	1	WECC
					Nick Fogleman	Prairie Power, Inc.	1,3	SERC
					Marcus Perkins	Southern Maryland Electric	3	RF

						Cooperative		
MRO	Jou Yang	1,2,3,4,5,6	MRO	MRO NSRF	Bobbi Welch	Midcontinent ISO, Inc.	2	MRO
					Chris Bills	City of Independence, Power and Light Department	5	MRO
					Fred Meyer	Algonquin Power Co.	3	MRO
					Christopher Bills	City of Independence Power & Light	3,5	MRO
					Larry Heckert	Alliant Energy Corporation Services, Inc.	4	MRO
					Marc Gomez	Southwestern Power Administration	1	MRO
					Matthew Harward	Southwest Power Pool, Inc. (RTO)	2	MRO
					Bryan Sherrow	Board of Public Utilities	1	MRO
					Terry Harbour	Berkshire Hathaway Energy - MidAmerican Energy Co.	1	MRO
					Terry Harbour	MidAmerican Energy Company	1,3	MRO
					Jamison Cawley	Nebraska Public Power District	1,3,5	MRO
					Seth Shoemaker	Muscatine Power & Water	1,3,5,6	MRO
					Michael Brytowski	Great River Energy	1,3,5,6	MRO
					Shonda McCain	Omaha Public Power District	6	MRO
					George E Brown	Pattern Operators LP	5	MRO
					George Brown	Acciona	5	MRO

						Energy USA		
					Jaimin Patel	Saskatchewan Power Cooperation	1	MRO
					Kimberly Bentley	Western Area Power Administration	1,6	MRO
					Jay Sethi	Manitoba Hydro	1,3,5,6	MRO
					Michael Ayotte	ITC Holdings	1	MRO
FirstEnergy - FirstEnergy Corporation	Mark Garza	1,3,4,5,6		FE Voter	Julie Severino	FirstEnergy - FirstEnergy Corporation	1	RF
					Aaron Ghodooshim	FirstEnergy - FirstEnergy Corporation	3	RF
					Robert Loy	FirstEnergy - FirstEnergy Solutions	5	RF
					Mark Garza	FirstEnergy- FirstEnergy	1,3,4,5,6	RF
					Stacey Sheehan	FirstEnergy - FirstEnergy Corporation	6	RF
Pacific Gas and Electric Company	Michael Johnson	1,3,5	WECC	PG&E All Segments	Marco Rios	Pacific Gas and Electric Company	1	WECC
					Sandra Ellis	Pacific Gas and Electric Company	3	WECC
					Frank Lee	Pacific Gas and Electric Company	5	WECC
Southern Company - Southern Company Services, Inc.	Pamela Hunter	1,3,5,6	SERC	Southern Company	Matt Carden	Southern Company - Southern Company Services, Inc.	1	SERC
					Joel Dembowski	Southern Company - Alabama Power Company	3	SERC
					Jim Howell, Jr.	Southern Company - Southern	5	SERC

						Company Generation		
					Ron Carlsen	Southern Company - Southern Company Generation	6	SERC
Northeast Power Coordinating Council	Ruida Shu	1,2,3,4,5,6,7,8,9,10	NPCC	NPCC RSC	Gerry Dunbar	Northeast Power Coordinating Council	10	NPCC
					Alain Mukama	Hydro One Networks, Inc.	1	NPCC
					Deidre Altobell	Con Edison	1	NPCC
					Jeffrey Streifling	NB Power Corporation	1	NPCC
					Michele Tondalo	United Illuminating Co.	1	NPCC
					Stephanie Ullah-Mazzuca	Orange and Rockland	1	NPCC
					Michael Ridolfino	Central Hudson Gas & Electric Corp.	1	NPCC
					Randy Buswell	Vermont Electric Power Company	1	NPCC
					James Grant	NYISO	2	NPCC
					John Pearson	ISO New England, Inc.	2	NPCC
					Harishkumar Subramani Vijay Kumar	Independent Electricity System Operator	2	NPCC
					Randy MacDonald	New Brunswick Power Corporation	2	NPCC
					Dermot Smyth	Con Ed - Consolidated Edison Co. of New York	1	NPCC
					David Burke	Orange and Rockland	3	NPCC
					Peter Yost	Con Ed -	3	NPCC

						Consolidated Edison Co. of New York		
					Salvatore Spagnolo	New York Power Authority	1	NPCC
					Sean Bodkin	Dominion - Dominion Resources, Inc.	6	NPCC
					David Kwan	Ontario Power Generation	4	NPCC
					Silvia Mitchell	NextEra Energy - Florida Power and Light Co.	1	NPCC
					Glen Smith	Entergy Services	4	NPCC
					Sean Cavote	PSEG	4	NPCC
					Jason Chandler	Con Edison	5	NPCC
					Tracy MacNicoll	Utility Services	5	NPCC
					Shivaz Chopra	New York Power Authority	6	NPCC
					Vijay Puran	New York State Department of Public Service	6	NPCC
					ALAN ADAMSON	New York State Reliability Council	10	NPCC
					David Kiguel	Independent	7	NPCC
					Joel Charlebois	AESI	7	NPCC
					Joshua London	Eversource Energy	1	NPCC
Western Electricity Coordinating Council	Steven Rueckert	10		WECC CIP	Steve Rueckert	WECC	10	WECC
					Morgan King	WECC	10	WECC
					Deb McEndaffer	WECC	10	WECC
					Tom Williams	WECC	10	WECC

1. Do you agree with the proposed scope as described in the Project 2023-06 CIP-014 SAR? If you do not agree, or if you agree but have comments or suggestions for the project scope please provide your recommendation and explanation.

Tony Eddleman - Nebraska Public Power District - 1,3,5

Answer	No
Document Name	

Comment

Due to the critical interdependency between requirement 1 and requirement 2, requirement 2 should be added to the project scope for the drafting team.

Likes 0	
Dislikes 0	

Response

Jennie Wike - Tacoma Public Utilities (Tacoma, WA) - 1,3,4,5,6 - WECC, Group Name Tacoma Power

Answer	No
Document Name	

Comment

Tacoma Power endorses the comments from MRO NSRF.

In addition to the MRO NSRF comments, Tacoma Power does not agree with the description in the Cost Impact Assessment section of the SAR. Specifically, the statement that “cost impacts for the proposed changes to CIP-014-3 are expected to be minimal.” The cost impacts are significant for Detail 5, “Revise the risk assessment and clarify how to account for adjacent Transmission stations or Transmission substations of differing ownership as well as for those Transmission stations or Transmission substations within line-of-sight to each other.” Tacoma Power recommends revising the cost impact section of the SAR to recognize that the work necessary to implement Detail 5 would be significant and may result in additional applicable substations.

The SAR is also not clear as to how Detail 5 would impact the Section 4.1.1 applicable facility determination. There are facilities that do not meet the Section 4.1.1 applicability criteria when evaluated separately, but may meet that criteria if Detail 5 is applied.

Tacoma Power recommends that the SAR scope include an additional Detail to clarify the evidence required to demonstrate that an entity does not have applicable facilities. Throughout the ERO Enterprise, there is inconsistency on whether entities with a null list of applicable facilities are required to comply with CIP-014 R1-R3.

Likes 0	
Dislikes 0	

Response

Stephen Stafford - Georgia Transmission Corporation - 1 - SERC

Answer	No
Document Name	

Comment

Items 1 – 4 in the Project Scope section of the SAR suggest the standard should be modified to clarify “methods for studying”, “study period”, “frequency of study”, “base cases”, “study decisions”, and other terminology that suggests a planning function is being performed. CIP-014 is only applicable to the owner functional entities who do not perform planning analyses. It does not seem appropriate to add planning analysis requirements in the CIP-014 standard when it is not applicable to planning entities.

Likes 0	
Dislikes 0	

Response

Bobbi Welch - Midcontinent ISO, Inc. - 2, Group Name ISO/RTO Council Standards Review Committee 2023-06 CIP-014 Risk Assessment SAR

Answer	No
Document Name	

Comment

The **ISO/RTO Council (IRC) Standards Review Committee (SRC)**[1] appreciates the opportunity to comment. The SRC agrees that additional clarity and specificity will increase the efficacy of CIP-014. In support of that objective, the SRC recommends that the scope be revised to direct the drafting team to clarify the following areas of ambiguity.

- For a transmission station or substation connecting to a collector bus for a generation plant, clarify whether the collector bus is still not considered a Transmission Facility for purposes of Applicability criteria 4.1.1.1 and 4.1.1.2 if the collector bus is the Point of Interconnection for the generation plant.
- For Applicability criterion 4.1.1.2, clarify whether the Weight Value per Line is applied per transmission line or per transmission circuit. For example, clarify whether a double-circuit 345-kV line has a weight value of 2600 or 1300.
- Clarify the extent to which radial facilities qualify as Transmission Facilities for purposes of the Applicability criteria for CIP-014-3. The Guidelines and Technical Basis for CIP-014-3 (page 21 of the standard) indicates that the Applicability section of CIP-014-3 mirrors the bright line criteria for Medium Impact Transmission Facilities under CIP-002-5.1a. Page 27 of CIP-002-5.1a, in turn, indicates that Criterion 2.5 for identifying Medium Impact Transmission Facilities excludes “radial facilities that would only provide support for single generation facilities.” It is not clear how this exclusion fits in with the Applicability criteria of CIP-014-3. Specifically, it is not clear if these radial facilities should be included in the determination of how many stations or substations a given station or substation connects to, and it is not clear if these radial facilities should be assigned a weight value as incoming or outgoing BES Transmission Lines that connect to another Transmission station or substation.
- Clarify how the exclusion for “radial facilities that would only provide support for single generation facilities” (discussed above) interacts with the statement on page 23 of CIP-002-5.1a that “[w]hen the drafting team uses the term ‘Facilities,’ there is some latitude to Responsible Entities to determine included Facilities,” and with CIP-014-3 Requirement R2, Part 2.3’s authorization for TOs to document the technical basis for not modifying an identification in accordance with a recommendation from an unaffiliated verifying entity. Specifically, clarify how much latitude TOs have to interpret the exclusion for “radial facilities that would only provide support for single generation facilities."

[1] For purposes of these comments, the IRC SRC includes the following entities: ERCOT, MISO, NYISO, PJM and SPP.

Likes 0	

Dislikes 0	
Response	
Kennedy Meier - Electric Reliability Council of Texas, Inc. - 2	
Answer	No
Document Name	
Comment	
ERCOT joins the comments submitted by the ISO/RTO Council (IRC) Standards Review Committee (SRC) and adopts them as its own.	
Likes 0	
Dislikes 0	
Response	
Jou Yang - MRO - 1,2,3,4,5,6 - MRO, Group Name MRO NSRF	
Answer	Yes
Document Name	
Comment	
The MRO NSRF agrees with the scope of the SAR as having identified the aspects of CIP-014 R1 that require clarification, but disagrees with some of the subsequent detailed instructions to the drafting team as follows: Detail 1, please replace the final bolded item “BPS” with “BES.” Industry has already identified all BES Transmission Elements when the term was redefined for 2014. There are no such defined lists of BPS equipment. Applicability Section 4.1.1 and parts already provide such specificity as has already been validated as sufficient by the NERC report filed with FERC. There is no justification to arbitrarily reference a broader BPS within this standard, and Section 4.1.1 renders the change moot. Detail 3 takes the general guidance of Scope item 3 but specifies “defining ‘inoperable’ or ‘damaged’ substations”, which is inconsistent with Scope item 4 that will require simulating complete loss. The sentence “Criteria should include defining “inoperable” or “damaged” substations such that the intent of the risk assessment is clear.” binds the drafting team to maintain and define language inconsistent with Scope item 4 and should be removed. Removing this sentence would free the drafting team to replace this language with something like “destroyed” which could then be defined in accordance with Scope item 4. Detail 5 can provide a list of items requiring consideration, but it must be made clear to the drafting team that while these items must be considered, they do not necessarily have to be modeled as also lost if an entity’s evaluation cites mitigating circumstances such as the adjacent or line-of-sight Facility already having or implementing security measures to counter these threats before the next risk assessment is due (consistent with Scope item 2). Any items listed for required consideration should be sufficiently defined and limited so as not to require the equivalent performance of a full R4	

threat assessment.	
Likes 1	Tacoma Public Utilities (Tacoma, WA), 1,3,4,5,6, Wike Jennie
Dislikes 0	
Response	
Mark Garza - FirstEnergy - FirstEnergy Corporation - 1,3,4,5,6, Group Name FE Voter	
Answer	Yes
Document Name	
Comment	
FirstEnergy supports the scope of the SAR and further supports EEI comments.	
Likes 0	
Dislikes 0	
Response	
Jennifer Bray - Arizona Electric Power Cooperative, Inc. - 1	
Answer	Yes
Document Name	
Comment	
AEPC has signed on to ACES comments below: Every critical station within the scope of CIP-014 poses different challenges and risks to consider. Each entity has different people, constraints (physical, technological, electrical, etc.), and risks; therefore, the expectation that entities would have “reasonably consistent” approaches to CIP-014 is not a reasonable expectation. This SAR’s proposed changes are similar to previous changes to the CIP standards, such as CIP-002-3 (risk based) versus CIP-002-5.1a (bright line). This SAR should seek to establish a minimum baseline of risks/risk attributes that NERC, FERC, and the industry believe need to be evaluated to have a more “reasonably consistent” approach. Establishing a baseline, such as logging and monitoring in CIP-007, or bright line in CIP-002, would provide some of the consistency the SAR proposes to provide, but each approach may still be different. If the Standards Drafting Team (SDT) were to add baseline risks for consideration, they should not be overly prescriptive, rather they should provide a minimum list of risks to consider and any exclusions to allow the entity flexibility in its approach. The cost impact cannot be overlooked in the SAR. If a set of risk criteria is established as a result of this project and an entity did not previously consider one or more of those risk, a control would need to be created to mitigate the risk, which could come with a cost. The proposed changes to CIP-014 will require each entity within the scope to rewrite its CIP-014 program and reevaluate each risk assessment, which could also come with a cost.	
Likes 0	
Dislikes 0	
Response	

Ruida Shu - Northeast Power Coordinating Council - 1,2,3,4,5,6,7,8,9,10 - NPCC, Group Name NPCC RSC	
Answer	Yes
Document Name	
Comment	
While we agree that the identification of applicable facilities criteria could benefit from more clarity on the initiating event(s) triggering the resulting consequence "…that if rendered inoperable or damaged as a result of a physical attack could result in instability, uncontrolled separation, or Cascading within an Interconnection.", changes, as proposed in the SAR, will impose a tremendous effort on entities to achieve compliance.	
Likes 0	
Dislikes 0	
Response	
April Ford - Southern Indiana Gas and Electric Co. - 3,5,6 - RF	
Answer	Yes
Document Name	
Comment	
Southern Indiana Gas and Electric Company d/b/a CenterPoint Energy Indiana (SIGE) agrees with the proposed scope of the SAR.	
Likes 0	
Dislikes 0	
Response	
Lucinda Bradshaw - Oncor Electric Delivery - 1 - Texas RE	
Answer	Yes
Document Name	
Comment	
Oncor encourages NERC to consider the vast diversity of the Bulk Power Systems owned and operated by the Registered Entities to which the new CIP-014 would apply (*e.g.,* the varied operating environments or different market structures in which those Registered Entities do business) and to acknowledge in the revised Standard the possibility that the criteria for the required risk assessment may be revised as needed to enable the affected Registered Entity to properly assess its Transmission stations and Transmission Substations.	
Likes 0	
Dislikes 0	

Response	
Michael Johnson - Pacific Gas and Electric Company - 1,3,5 - WECC, Group Name PG&E All Segments	
Answer	Yes
Document Name	
Comment	

PG&E has the following input related to the Detailed Description in the SAR starting on page 3:

For Item 1; PG&E concurs and supports the clarification of the risk assessment methods for studying instability, uncontrolled separation, and Cascading. PG&E also recommends that as part of the clarification, it is important for NERC to consider that registered entities will need to evaluate each broad type of stability based on their regional requirements. For instance, PG&E is currently following the TPL 001-WECC-CRT-3.2 criterion for voltage and frequency performance to assess the results of the Transient Stability analysis.

For Item 2; PG&E agrees that the statement "including only the projects that are appropriate to the periodicity of the entity's risk assessment studies" should be clarified, as the existing language could have different interpretations.

For Item 3; PG&E has no comment.

For Item 4; PG&E supports the input has a comment regarding the following statement "it is not clear that the risk assessment requires registered entities to use models that correlate to periods of high flows or high stress on their system". Since each region experiences different high flow patterns and stressed conditions, PG&E suggests that NERC provide clarifications and guidelines for defining the high stressed scenarios but allows entities to define their scenarios based on their unique system conditions and their respective region.

For Item 5; PG&E encourages clarification regarding what physically adjacent elements shall be considered within the risk assessment. In addition, if a substation is identified as critical based on the study and related substation (asset) is not owned by the registered entity that performed the study, clarification should be provided regarding the responsibilities between that registered entity and the other asset owner.

For the Cost Impact Assessment on page 5, PG&E provides the following; PG&E understands that the NERC proposed changes are targeting to add clarity to the current standard and not changing the existing requirements. However, implementing the proposed clarifications may result in more substations requiring security upgrades and that would impact the associated costs.

Likes 0	
Dislikes 0	
Response	
Chantal Mazza - Hydro-Quebec (HQ) - 1 - NPCC	

Answer	Yes
Document Name	
Comment	
While we agree that the identification of applicable facilities criteria could benefit from more clarity on the initiating event(s) triggering the resulting consequence "…that if rendered inoperable or damaged as a result of a physical attack could result in instability, uncontrolled separation, or Cascading within an Interconnection.", changes, as proposed in the SAR, will impose a tremendous effort on entities to achieve compliance.	
Likes 0	
Dislikes 0	
Response	
Brad Harris - CenterPoint Energy Houston Electric, LLC - 1 - Texas RE	
Answer	Yes
Document Name	
Comment	
CenterPoint Energy Houston Electric, LLC (CEHE) agrees with the proposed scope of the SAR.	
Likes 0	
Dislikes 0	
Response	
Jay Sethi - Manitoba Hydro - 1,3,5,6 - MRO	
Answer	Yes
Document Name	
Comment	
Manitoba Hydro agrees with the scope of the SAR. Further clarification of CIP-014 R1 as proposed in the SAR will help the industry as a whole. Manitoba Hydro is requesting additionally that the SAR provide clarity on whether past studies can be relied upon if there are no material changes in the network since the last CIP-014 assessment, provided that the Transmission Owner has performed an acceptable risk assessment which meets the requirements identified in the scope of this SAR? This would reduce study burden on industry; especially on entities studying every 30 months. Manitoba Hydro also has some comments relating to the detailed description items and suggests the following changes: In detailed description number 1, replace the term "BPS" with "BES" which is well defined and for which a well established inventory of elements exists.	

In detailed description number 3, it takes the general guidance of Scope item 3 but specifies “defining ‘inoperable’ or ‘damaged’ substations”, which is inconsistent with Scope item 4 that will require simulating complete loss. The sentence “Criteria should include defining “inoperable” or “damaged” substations such that the intent of the risk assessment is clear.” binds the drafting team to maintain and define language inconsistent with Scope item 4 and should be removed. The standard drafting team should be free to review the option of changing the wording to add clarity, as well as the option to further define the terms.

In detailed description number 5, it can provide a list of items requiring consideration, but it must be made clear to the drafting team that while these items must be considered, they do not necessarily have to be modeled as also lost if an entity’s evaluation cites mitigating circumstances such as the adjacent or line-of-sight Facility already having or implementing security measures to counter threats before the next risk assessment is due (consistent with Scope item 2). Any items listed for required consideration should be sufficiently defined and limited so as not to require the equivalent performance of a full R4 threat assessment.

Likes 0	
Dislikes 0	

Response

John Pearson - ISO New England, Inc. - 2

Answer	Yes
Document Name	

Comment

ISO New England supports the changes to make the standard result in more uniform determinations that will most appropriately identify critical infrastructure and evaluate whether the physical security protection requirements are adequate to address the risks associated with physical attacks on Bulk Power System (BPS) Facilities. The owners of the BPS Facilities are the most appropriate entities to make initial determinations and appropriate identification.

Likes 0	
Dislikes 0	

Response

Michael Jones - National Grid USA - 1,3,5

Answer	Yes
Document Name	

Comment

RE: Project Scope Item 2: Please consider adding to the Project Scope and Detailed Description that the amount of time between risk assessments should be clarified. Requirement R1 Part 1.1 of CIP-014-3 states “Subsequent risk assessments shall be performed: At least once every 30 calendar months… or, At least once every 60 calendar months… (as verified according to Requirement R2)” This could be interpreted as the 30 or 60 calendar

months clock for the next subsequent risk assessment starts when Requirement R2 is completed, i.e., up to 90 + 60 days after Requirement R1 was completed. This could potentially also be interpreted as the 30 or 60 calendar months clock for the next subsequent risk assessment starts once Requirement R1 has been completed. Please consider that the SAR should specifically give the drafting team the ability to resolve this issue.

Likes 0	
Dislikes 0	

Response

Mark Gray - Edison Electric Institute - NA - Not Applicable - NA - Not Applicable

Answer	Yes
Document Name	

Comment

EEI supports adding requirements that provide additional clarity to existing risk assessment methods for studying instability, uncontrolled separation, and cascading. However, we would not support changes to requirements that resulted in modifications that deviated from the clearly defined project scope as contained in this SAR or added prescriptive requirements that did not consider regional differences and geography. Standards should be flexible, and risk based.

EEI asks for clarity to Item 3 in the SAR Project Scope where it uses the term “adequacy”. As currently written this Item could be understood to require changes to CIP-014 that would require the development of prescriptive requirements for both documentation and entity studies that could be interpreted as deviating from the current Risk Based Reliability Standard processes.

EEI also requests clarity on the intended scope of Item 5 in the SAR Project Scope. Specifically, clarity is needed as it relates to Transmission stations or substations of differing ownership, as well as transmission stations or substations within line-of-site to each other. However, it should be clear that responsible entities need the authority to request certain information from the responsible entities identified in Item 5, to conduct their CIP-014 studies (i.e., models, actual clearing times, etc.).

Likes 0	
Dislikes 0	

Response

Alan Kloster - Evergy - 1,3,5,6 - MRO

Answer	Yes
Document Name	

Comment

Evergy supports and incorporates by reference the comments of the Edison Electric Institute (EEI) for question #1.

Likes 0	
Dislikes 0	

Response

Clay Walker - Cleco Corporation - 1,3,5,6 - SERC	
Answer	Yes
Document Name	

Comment
Cleco support the comments provided by EEI.

Likes 0	
Dislikes 0	

Response

Richard Vendetti - NextEra Energy - 5	
Answer	Yes
Document Name	

Comment
NEE is in agreement with EEI's comments. EEI supports adding requirements that provide additional clarity to existing risk assessment methods for studying instability, uncontrolled separation, and cascading. However, we would not support changes to requirements that resulted in modifications that deviated from the clearly defined project scope as contained in this SAR or added prescriptive requirements that did not consider regional differences and geography. Standards should be flexible, and risk based. EEI asks for clarity to Item 3 in the SAR Project Scope where it uses the term "adequacy". As currently written this Item could be understood to require changes to CIP-014 that would require the development of prescriptive requirements for both documentation and entity studies that could be interpreted as deviating from the current Risk Based Reliability Standard processes. EEI also requests clarity on the intended scope of Item 5 in the SAR Project Scope. Specifically, clarity is needed as it relates to Transmission stations or substations of differing ownership, as well as transmission stations or substations within line-of-site to each other. However, it should be clear that responsible entities need the authority to request certain information from the responsible entities identified in Item 5, to conduct their CIP-014 studies (i.e., models, actual clearing times, etc.).

Likes 0	
Dislikes 0	

Response

Ellese Murphy - Duke Energy - 1,3,5,6 - MRO,WECC,Texas RE,SERC,RF	
Answer	Yes

Document Name	
Comment	
Duke Energy supports EEI's comments.	
Likes 0	
Dislikes 0	
Response	
Rachel Coyne - Texas Reliability Entity, Inc. - 10	
Answer	Yes
Document Name	
Comment	
Texas RE supports this project to ensure adequacy and consistency in the CIP-014 approach. Texas RE recommends the SAR indicate whether the terms “inoperable” or “damaged” will be defined in the NERC Glossary.	
Likes 0	
Dislikes 0	
Response	
Junji Yamaguchi - Hydro-Quebec (HQ) - 1,5	
Answer	Yes
Document Name	
Comment	
While we agree that the identification of applicable facilities criteria could benefit from more clarity on the initiating event(s) triggering the resulting consequence “…that if rendered inoperable or damaged as a result of a physical attack could result in instability, uncontrolled separation, or Cascading within an Interconnection.”, changes, as proposed in the SAR, will impose a tremendous effort on entities to achieve compliance.	
Likes 0	
Dislikes 0	
Response	
Jodirah Green - ACES Power Marketing - 1,3,4,5,6 - MRO,WECC,Texas RE,SERC,RF, Group Name ACES Collaborators	
Answer	Yes

Document Name	

Comment

ACES agrees with the scope of the SAR, with the following comments:

Every critical station within the scope of CIP-014 poses different challenges and risks to consider. Each entity has different people, constraints (physical, technological, electrical, etc.), and risks; therefore, the expectation that entities would have “reasonably consistent” approaches to CIP-014 is not a reasonable expectation.

This SAR’s proposed changes are similar to previous changes to the CIP standards, such as CIP-002-3 (risk based) versus CIP-002-5.1a (bright line). This SAR should seek to establish a minimum baseline of risks/risk attributes that NERC, FERC, and the industry believe need to be evaluated to have a more “reasonably consistent” approach. Establishing a baseline, such as logging and monitoring in CIP-007, or bright line in CIP-002, would provide some of the consistency the SAR proposes to provide, but each approach may still be different. If the Standards Drafting Team (SDT) were to add baseline risks for consideration, they should not be overly prescriptive, rather they should provide a minimum list of risks to consider and any exclusions to allow the entity flexibility in its approach.

The cost impact cannot be overlooked in the SAR. If a set of risk criteria is established as a result of this project and an entity did not previously consider one or more of those risk, a control would need to be created to mitigate the risk, which could come with a cost. The proposed changes to CIP-014 will require each entity within the scope to rewrite its CIP-014 program and reevaluate each risk assessment, which could also come with a cost.

Likes 0	
Dislikes 0	

Response

Dwanique Spiller - Berkshire Hathaway - NV Energy - 5

Answer	Yes
Document Name	

Comment

NV Energy agrees with the scope of the SAR as having identified the aspects of CIP-014 R1 that require clarification, but disagrees with some of the subsequent detailed instructions to the drafting team as follows:

Detail 1, please replace the final bolded item “BPS” with “BES.” Industry has already identified all BES Transmission Elements when the term was redefined for 2014. There are no such defined lists of BPS equipment. Applicability Section 4.1.1 and parts already provide such specificity as has already been validated as sufficient by the NERC report filed with FERC. There is no justification to arbitrarily reference a broader BPS within this standard, and Section 4.1.1 renders the change moot.

Detail 3 takes the general guidance of Scope item 3 but specifies “defining ‘inoperable’ or ‘damaged’ substations”, which is inconsistent with Scope item 4 that will require simulating complete loss. The sentence “Criteria should include defining “inoperable” or “damaged” substations such that the intent of the risk assessment is clear.” binds the drafting team to maintain and define language inconsistent with Scope item 4 and should be removed. Removing this sentence would free the drafting team to replace this language with something like “destroyed” which could then be defined in accordance with Scope item 4.

Detail 5 can provide a list of items requiring consideration, but it must be made clear to the drafting team that while these items must be considered, they do not necessarily have to be modeled as also lost if an entity's evaluation cites mitigating circumstances such as the adjacent or line-of-sight Facility already having or implementing security measures to counter these threats before the next risk assessment is due (consistent with Scope item 2). Any items listed for required consideration should be sufficiently defined and limited so as not to require the equivalent performance of a full R4 threat assessment.

Likes 0	
Dislikes 0	

Response

Pamela Hunter - Southern Company - Southern Company Services, Inc. - 1,3,5,6 - SERC, Group Name Southern Company

Answer	Yes
Document Name	

Comment

Southern Company agrees with the submitted comments by EEI.

Likes 0	
Dislikes 0	

Response

Daniel Gacek - Exelon - 1,3

Answer	Yes
Document Name	

Comment

Exelon generally supports the proposed scope of this project, and we support the comments submitted by the EEI.

We offer the following additional comments to help refine the scope.

For Item 4, there is inconsistency between the Project Scope section and the Detailed Description, specifically in the Project Scope section it states "simultaneous loss of all station elements and does not rely on local system protection for relay clearance", however in the Detailed Description section it seems to leave open to the SDT to determine how to resolve the initiating event assumptions.

The word simultaneous in the Project Scope section is also potentially problematic. In dynamic studies there may be a significant difference between literally simultaneous and a couple cycles (milliseconds) of delay. Some physical threats can result in simultaneous loss of station elements, other physical threats may result in delay between loss of station elements. Modifications to the standard should include the latitude for the planning analysis to align with the physical threats with regard to delay or lack of delay between the loss of substation elements.

For Item 5, similar to Item 4, the standard should include the latitude for the planning analysis to align with the identified physical threats with regard to

delay or lack of delay between the loss of substation elements.	
Likes 0	
Dislikes 0	
Response	
Marcus Bortman - APS - Arizona Public Service Co. - 1,3,5,6	
Answer	Yes
Document Name	
Comment	
AZPS agrees with EEI in supporting the development of standards which provide clarity to existing risk assessment methods for studying instability, uncontrolled separation, and cascading while maintaining standards that are flexible and risk based. In regard to item 5, AZPS would also like clarity as to the intended scope of changes relating to transmission substations within close physical proximity/line of sight and the required information sharing between entities when differing ownership is a factor.	
Likes 0	
Dislikes 0	
Response	
Lori Frisk - Allete - Minnesota Power, Inc. - 1	
Answer	Yes
Document Name	
Comment	
Minnesota Power supports the comments submitted by Edison Electric Institute (EEI) and the MRO NERC Standards Review Forum (NSRF).	
Likes 0	
Dislikes 0	
Response	
David Jendras Sr - Ameren - Ameren Services - 1,3,6	
Answer	Yes
Document Name	
Comment	

Ameren agress with and supports EEI comments. In addition we would like more clarity around two items in this SAR:

(1) the word "posting" used in Page 3, Project Scope, Item 3.

(2) the phrase "all station elements" used in Page 4, Project Scope, Item 4. Does this include control houses, one or multiple?

Likes 0	
Dislikes 0	

Response

Kent Feliks - AEP - 3,5,6

Answer	Yes
Document Name	

Comment

Kent Feliks on behalf of AEP in Segments 1, 3, 5, 6

We recommend removal of the statement, “To ensure that no instability occurs in simulation, registered entities can cover each broad type of stability analysis via Contingency analysis, governor power flow analysis, and transient stability analysis.” The standard does not seek to ensure that "no instability occurs in simulation". It seeks to indentify "widespread instability... within an Interconnection". Per FERC Order 802, only instability “critical to the operation of the Interconnection” is necessary to identify. The SDT must therefore qualify “instability” so that only critical instabilities are identified, for example, instability that results in such a loss of generation as to cause UFLS activation or that may lead to further cascading or to uncontrolled separation. Additionally, listing three methods of identifying instability as “via Contingency analysis, governor power flow analysis, and transient stability analysis” is contrary to other statements implying that dynamic simulations must be run to determine if there is instability. Contingency powerflow analysis and governor powerflow analysis are not forms of dynamic simulation.

Likes 0	
Dislikes 0	

Response

Lindsey Mannion - ReliabilityFirst - 10

Answer	Yes
Document Name	

Comment

Likes 0	
Dislikes 0	

Response

Cain Braveheart - Bonneville Power Administration - 1,3,5,6 - WECC	
Answer	Yes
Document Name	
Comment	
Likes 0	
Dislikes 0	
Response	
Donna Wood - Tri-State G and T Association, Inc. - 1,3,5	
Answer	Yes
Document Name	
Comment	
Likes 0	
Dislikes 0	
Response	
Joshua London - Eversource Energy - 1,3	
Answer	Yes
Document Name	
Comment	
Likes 0	
Dislikes 0	
Response	
Dave Krueger - SERC Reliability Corporation - 10	
Answer	Yes
Document Name	
Comment	

Likes 0	
Dislikes 0	
Response	
Alain Mukama - Hydro One Networks, Inc. - 1,3	
Answer	Yes
Document Name	
Comment	
Likes 0	
Dislikes 0	
Response	
Steven Rueckert - Western Electricity Coordinating Council - 10, Group Name WECC CIP	
Answer	Yes
Document Name	
Comment	
Likes 0	
Dislikes 0	
Response	
Israel Perez - Salt River Project - 1,3,5,6 - WECC	
Answer	Yes
Document Name	
Comment	
Likes 0	
Dislikes 0	
Response	

Gail Elliott - International Transmission Company Holdings Corporation - NA - Not Applicable - MRO,RF	
Answer	Yes
Document Name	
Comment	
Likes 0	
Dislikes 0	
Response	
Matt Lewis - Lower Colorado River Authority - 1,5	
Answer	Yes
Document Name	
Comment	
Likes 0	
Dislikes 0	
Response	
Teresa Krabe - Lower Colorado River Authority - 1,5	
Answer	Yes
Document Name	
Comment	
Likes 0	
Dislikes 0	
Response	

2. Provide any additional comments for the SAR drafting team to consider, if desired.	
Kent Feliks - AEP - 3,5,6	
Answer	
Document Name	
Comment	

Regarding SAR Scope #5:There are no recommended changes on the explicit language as written, however it is important for the drafting team to note that outages based on some of these recommended distance criteria would not be simultaneous. It is critical that the the outage scenarios required for study by the standard do not open the requirement up to studying nonsimultaneous outages of multiple stations, as this would create unbounded combined-outage analysis scenarios. In addition, loosely described distance criteria (line-of-sight, ease of access, etc.) may also create unreasonable unbounded analysis scenarios. Any such increase in risk assessment scope must be clearly and unambiguously defined within the standard.

Regarding Cost Impact Assessments: We strongly disagree with and recommend removal of the statement, “The cost impacts for the proposed changes to CIP-014-3 are expected to be minimal.”

For small entities not currently performing analysis to determine local voltage angle instability, rotor angle instability, and frequency instability, given their small footprint's minimal impact on the stability of the Interconnection - these changes will require hiring/training new dynamic analysis expertise or outsourcing their CIP-014 risk assessment to cosultants with this expertise. This will likely have a significant cost impact for these entities.

For large entities performing these types of stability analyses on a subset of applicable stations whose loss pose a critical impact on the operation of the Interconnection, studying all stations for all types of local instability, even those that pose little to no risk to the operation of the Interconnection, will significantly increase the time to perform the risk assessment, and may also require staff augmentation or outside consultants to complete in a timely manner. This will also have a significant cost impact for these entities.

Likes 0	
Dislikes 0	
Response	
David Jendras Sr - Ameren - Ameren Services - 1,3,6	
Answer	
Document Name	
Comment	
None.	
Likes 0	
Dislikes 0	

Response

Kennedy Meier - Electric Reliability Council of Texas, Inc. - 2	
Answer	
Document Name	
Comment	
ERCOT joins the comments submitted by the IRC SRC and adopts them as its own.	
Likes 0	
Dislikes 0	

Response

Marcus Bortman - APS - Arizona Public Service Co. - 1,3,5,6	
Answer	
Document Name	
Comment	
AZPS does not have any additional comments for the SAR to consider at this time.	
Likes 0	
Dislikes 0	

Response

Bobbi Welch - Midcontinent ISO, Inc. - 2, Group Name ISO/RTO Council Standards Review Committee 2023-06 CIP-014 Risk Assessment SAR	
Answer	
Document Name	
Comment	
The SRC notes that page 5 of the SAR lists Transmission Owners and Transmission Operators as the functional entities to which the standard should apply. The SRC agrees that these are the appropriate functional entities to which the standard should apply; however, the SRC also recommends that the standard drafting team include representatives from Planning Coordinators (PCs), Reliability Coordinators (RCs) and Transmission Planners (TPs), as these entities often perform verifications of risk assessments, and representatives from these functional entities will therefore be able to provide important perspectives to the drafting team even though the standard does not and should not apply to these functional entities. In the event the standard drafting team does not include representatives from one or more of these functional entities, the SRC recommend that the drafting team solicit feedback from these functional entities in the course of developing modifications to the standard.	
Likes 0	

Dislikes 0	
Response	
Daniel Gacek - Exelon - 1,3	
Answer	
Document Name	
Comment	
In the current Requirement 1, the 24-month study period in-service window limits the planners ability to consider projects that may mitigate the identified risk. The SAR drafting team should consider evaluating the 24-month study period in-service window and consider extending the window to 30-month. With a 30-month window, enties would be able to consider all substation elements expected to be placed into service, or retired, prior to the R1.1 30-month subsequent risk assessment required of entites that have identified one or more substations subject to the standard.	
Likes 0	
Dislikes 0	
Response	
Pamela Hunter - Southern Company - Southern Company Services, Inc. - 1,3,5,6 - SERC, Group Name Southern Company	
Answer	
Document Name	
Comment	
No additional comments.	
Likes 0	
Dislikes 0	
Response	
Dwanique Spiller - Berkshire Hathaway - NV Energy - 5	
Answer	
Document Name	
Comment	
None at this time.	
Likes 0	

Dislikes 0	

Response

Jodirah Green - ACES Power Marketing - 1,3,4,5,6 - MRO,WECC,Texas RE,SERC,RF, Group Name ACES Collaborators	
Answer	
Document Name	

Comment
Thank you for the opportunity to comment.

Likes 0	
Dislikes 0	

Response

Junji Yamaguchi - Hydro-Quebec (HQ) - 1,5	
Answer	
Document Name	

Comment
The following changes from item number one of the Detailed Description should be made: Clarity should be added to the risk assessment to assure that instability is studied and that professional judgment assumptions are based on the investigation of instability. Including the word “fully” leads to increased difficulty in proving to an auditor that the stability studies being performed meet the expected threshold, the word should be removed. By saying “Clarity should be added to the risk assessment to assure that instability is studied,” there is still the expectation to study for instability without the added compliance pressure of being pseudo-zero-defect. As such, the revision should outline technical supporting expectations to clearly identify when an Applicable substation has demonstrated any form of instability. At a minimum, this revision should include specificity regarding the inclusion of transient dynamic studies to evaluate the conditions of the BPS. The word "not" should be removed. Entities should identify the Applicable substations that have demonstrated instability to ease the administrative burden by justifying the basis that any one substation has demonstrated instability through the studies performed versus proving that a station did not have instability. Entities should identify the Applicable substations that have demonstrated instability to ease the administrative burden by justifying the basis that any one substation has demonstrated instability through the studies performed versus proving that a station did not have instability. After reviewing the 5 criteria, the consistency between the risk-based approach established in CIP-002, the Facility is different than the proposed CIP-014 risk criteria. An example is relay clearance times to justify deeper physical security but CIP-002 may rate it as a low impact, but from a CIP-014 perspective it may require higher physical security controls that may not be commensurate with the risk assessed in CIP-002. This may include scenarios that end up requiring significant physical security controls, but not the equivalent level of cybersecurity-related controls; despite being the same station / Facility. The proposed SAR is a parallel scoping criterion to CIP-002 based more on the function/impact of the system as opposed to rudimentary bright-line criteria. Please consider criteria 1-4 to be incorporated into another standard such as TPL-001, CIP-002, PRC, etc. Criteria 5 is security specific and could be incorporated in CIP-014. Consider that if a physical evaluation requires the CIP-014 table 4.1.1.2 match the CIP-002 bright-line criteria. Recommending an objective-based input.

This assessment impacts not only changed scope but impacts downstream considerations which; therefore, will impact cost and may require long implementation timelines which address the risks identified in the risk assessment. We strongly disagree with the Cost Impact Assessment of the SAR's proposed methodology as being minimal. Conducting a large-scale stability study on a system of any reasonable size is very labor-intensive and can take anywhere from 3 to 6 months or more for a team of transmission planners.	
Likes 0	
Dislikes 0	
Response	
Steven Rueckert - Western Electricity Coordinating Council - 10, Group Name WECC CIP	
Answer	
Document Name	
Comment	
None	
Likes 0	
Dislikes 0	
Response	
Alain Mukama - Hydro One Networks, Inc. - 1,3	
Answer	
Document Name	
Comment	
None	
Likes 0	
Dislikes 0	
Response	
John Pearson - ISO New England, Inc. - 2	
Answer	
Document Name	
Comment	

Regarding the cost impact assessment, the SAR states that cost impacts for the proposed changes to CIP-014-3 are expected to be minimal. The assessment appears to be based solely on modifications to system studies and does not seem to contemplate the additional spending that would be necessary on any stations newly identified as requiring physical security upgrades as a result of changes to the standard.

Likes 0	
Dislikes 0	

Response

Brad Harris - CenterPoint Energy Houston Electric, LLC - 1 - Texas RE

Answer	
Document Name	

Comment

CEHE would like to take this opportunity to support and amplify the statement in the SAR Scope Detailed Description item #1: “This revision should not preclude entities from only conducting an evaluation for long-term studies (e.g., steady-state) or from only conducting dynamic simulations in some instances (e.g., not requiring additional study types once a site is already identified as critical).” CEHE does not want the R1 Risk Assessment requirements to limit flexibility.

Likes 0	
Dislikes 0	

Response

Chantal Mazza - Hydro-Quebec (HQ) - 1 - NPCC

Answer	
Document Name	

Comment

The following changes from item number one of the Detailed Description should be made:

Clarity should be added to the risk assessment to assure that instability is studied and that professional judgment assumptions are based on the investigation of instability. Including the word “fully” leads to increased difficulty in proving to an auditor that the stability studies being performed meet the expected threshold, the word should be removed. By saying “Clarity should be added to the risk assessment to assure that instability is studied,” there is still the expectation to study for instability without the added compliance pressure of being pseudo-zero-defect.

As such, the revision should outline technical supporting expectations to clearly identify when an Applicable substation has demonstrated any form of instability. At a minimum, this revision should include specificity regarding the inclusion of transient dynamic studies to evaluate the conditions of the BPS.

The word "not" should be removed. Entities should identify the Applicable substations that have demonstrated instability to ease the administrative burden by justifying the basis that any one substation has demonstrated instability through the studies performed versus proving that a station did not have instability.

Entities should identify the Applicable substations that have demonstrated instability to ease the administrative burden by justifying the basis that any one substation has demonstrated instability through the studies performed versus proving that a station did not have instability.

After reviewing the 5 criteria, the consistency between the risk-based approach established in CIP-002, the Facility is different than the proposed CIP-014 risk criteria. An example is relay clearance times to justify deeper physical security but CIP-002 may rate it as a low impact, but from a CIP-014 perspective it may require higher physical security controls that may not be commensurate with the risk assessed in CIP-002. This may include scenarios that end up requiring significant physical security controls, but not the equivalent level of cybersecurity-related controls; despite being the same station / Facility.

he proposed SAR is a parallel scoping criterion to CIP-002 based more on the function/impact of the system as opposed to rudimentary bright-line criteria. Please consider criteria 1-4 to be incorporated into another standard such as TPL-001, CIP-002, PRC, etc.

Criteria 5 is security specific and could be incorporated in CIP-014.

Consider that if a physical evaluation requires the CIP-014 table 4.1.1.2 match the CIP-002 bright-line criteria.

Recommending an objective-based input.

This assessment impacts not only changed scope but impacts downstream considerations which; therefore, will impact cost and may require long implementation timelines which address the risks identified in the risk assessment.

We strongly disagree with the Cost Impact Assessment of the SAR's proposed methodology as being minimal. Conducting a large-scale stability study on a system of any reasonable size is very labor-intensive and can take anywhere from 3 to 6 months or more for a team of transmission planners.

Likes 0	
Dislikes 0	

Response

Michael Johnson - Pacific Gas and Electric Company - 1,3,5 - WECC, Group Name PG&E All Segments

Answer	
Document Name	

Comment

PG&E has no other input.

Likes 0	
Dislikes 0	

Response

Lucinda Bradshaw - Oncor Electric Delivery - 1 - Texas RE	
Answer	
Document Name	
Comment	
No Comment	
Likes 0	
Dislikes 0	
Response	

Dave Krueger - SERC Reliability Corporation - 10	
Answer	
Document Name	
Comment	
Under Project scope in #3, suggest adding "within each Interconnection is consistent" after the word Cascading. Under Detailed Description, suggest adding to #3 after the last sentence ending "application of a study method": For example, there should be a consistent method to establish the maximum amount of acceptable generation/load loss within each Interconnection. The methods might include coordination between PA/TP areas, RC areas, or with NERC Interconnection study groups. Entities should not have total flexibility when determining what does or does not affect the Interconnection.	
Likes 0	
Dislikes 0	
Response	

Jennie Wike - Tacoma Public Utilities (Tacoma, WA) - 1,3,4,5,6 - WECC, Group Name Tacoma Power	
Answer	
Document Name	
Comment	
Tacoma Power recommends that if “line of sight” is used in the revised CIP-014 Standard, then it needs to be clearly defined. For example, substations located within 100 yards of each other.	
Likes 0	

Dislikes 0	

Response

April Ford - Southern Indiana Gas and Electric Co. - 3,5,6 - RF	
Answer	
Document Name	

Comment
SIGE requests clarity around differing ownership for SAR Scope Detailed Description item #5: “The risk assessment should be revised to provide clear expectations regarding the inclusion of physically adjacent elements for the purpose of evaluating the impact from a physical attack.”

Likes 0	
Dislikes 0	

Response

Ruida Shu - Northeast Power Coordinating Council - 1,2,3,4,5,6,7,8,9,10 - NPCC, Group Name NPCC RSC	
Answer	
Document Name	

Comment
The following changes from item number one of the Detailed Description should be made: **Clarity should be added to the risk assessment to assure that instability is studied and that professional judgment assumptions are based on the investigation of instability.** Including the word “fully” leads to increased difficulty in proving to an auditor that the stability studies being performed meet the expected threshold, the word should be removed. By saying “Clarity should be added to the risk assessment to assure that instability is studied,” there is still the expectation to study for instability without the added compliance pressure of being pseudo-zero-defect. **As such, the revision should outline technical supporting expectations to clearly identify when an Applicable substation has demonstrated any form of instability. At a minimum, this revision should include specificity regarding the inclusion of transient dynamic studies to evaluate the conditions of the BPS.** The word "not" should be removed. Entities should identify the Applicable substations that *have* demonstrated instability to ease the administrative burden by justifying the basis that any one substation has demonstrated instability through the studies performed versus proving that a station did not have instability.

Entities should identify the Applicable substations that ***have*** demonstrated instability to ease the administrative burden by justifying the basis that any one substation has demonstrated instability through the studies performed versus proving that a station did not have instability.

After reviewing the 5 criteria, the consistency between the risk-based approach established in CIP-002, the Facility is different than the proposed CIP-014 risk criteria. An example is relay clearance times to justify deeper physical security but CIP-002 may rate it as a low impact, but from a CIP-014 perspective it may require higher physical security controls that may not be commensurate with the risk assessed in CIP-002. This may include scenarios that end up requiring significant physical security controls, but not the equivalent level of cybersecurity-related controls; despite being the same station / Facility.

The proposed SAR is a parallel scoping criterion to CIP-002 based more on the function/impact of the system as opposed to rudimentary bright-line criteria. Please consider criteria 1-4 to be incorporated into another standard such as TPL-001, CIP-002, PRC, etc.

Criteria 5 is security specific and could be incorporated in CIP-014.

Consider that if a physical evaluation requires the CIP-014 table 4.1.1.2 match the CIP-002 bright-line criteria.

Recommending an objective-based input.

This assessment impacts not only changed scope but impacts downstream considerations which; therefore, will impact cost and may require long implementation timelines which address the risks identified in the risk assessment.

We strongly disagree with the Cost Impact Assessment of the SAR's proposed methodology as being minimal. Conducting a large-scale stability study on a system of any reasonable size is very labor-intensive and can take anywhere from 3 to 6 months or more for a team of transmission planners.

Likes 0	
Dislikes 0	

Response

Joshua London - Eversource Energy - 1,3

Answer	

Document Name	

Comment

The following changes from item number one of the Detailed Description should be made:

Clarity should be added to the risk assessment to assure that instability is studied and that professional judgment assumptions are based on investigation of instability.

Including the word “fully” leads to increased difficulty proving to an auditor that the stability studies being performed meet the expected threshold, the word should be removed. By saying “Clarity should be added to the risk assessment to assure that instability is studied,” there is still the expectation to study for instability without the added compliance pressure of being pseudo zero-defect.

As such, the revision should outline technical supporting expectations to clearly identify when an Applicable substation has demonstrated any form of instability. At a minimum, this revision should include specificity regarding the inclusion of transient dynamic studies to evaluate conditions of the BPS.

The word "not" should be removed. Entities should identify the Applicable substations that ***have*** demonstrated instability to ease the administrative burden by justifying the basis that any one substation has demonstrated instability through the studies performed versus proving that a station did not have instability.

Likes 0	
Dislikes 0	

Response

Donna Wood - Tri-State G and T Association, Inc. - 1,3,5

Answer	
Document Name	

Comment

NA

Likes 0	
Dislikes 0	

Response

Mark Garza - FirstEnergy - FirstEnergy Corporation - 1,3,4,5,6, Group Name FE Voter

Answer	
Document Name	

Comment

See our response to Question 1.	
Likes 0	
Dislikes 0	
Response	

NERC
NORTH AMERICAN ELECTRIC RELIABILITY CORPORATION

Consideration of Comments

Project Name:	2023-06 CIP-014 Risk Assessment Refinement | Standard Authorization Request
Comment Period Start Date:	7/26/2023
Comment Period End Date:	8/24/2023

There were 43 sets of responses, including comments from approximately 117 different people from approximately 92 companies representing 10 of the Industry Segments as shown in the table on the following pages.

All comments submitted can be reviewed in their original format on the project page.

If you feel that your comment has been overlooked, let us know immediately. Our goal is to give every comment serious consideration in this process. If you feel there has been an error or omission, contact Director, Standards Development Latrice Harkness (via email) or at (404) 858-8088.

Questions

1. Do you agree with the proposed scope as described in the Project 2023-06 CIP-014 SAR? If you do not agree, or if you agree but have comments or suggestions for the project scope please provide your recommendation and explanation.

2. Provide any additional comments for the SAR drafting team to consider, if desired.

Industry Segments:

1 — Transmission Owners
2 — RTOs, ISOs
3 — Load-serving Entities
4 — Transmission-dependent Utilities
5 — Electric Generators
6 — Electricity Brokers, Aggregators, and Marketers
7 — Large Electricity End Users
8 — Small Electricity End Users
9 — Federal, State, Provincial Regulatory or other Government Entities
10 — Regional Reliability Organizations, Regional Entities

Organization Name	Name	Segment(s)	Region	Group Name	Group Member Name	Group Member Organization	Group Member Segment(s)	Group Member Region
Midcontinent ISO, Inc.	Bobbi Welch	2	MRO,RF,SERC	ISO/RTO Council Standards Review Committee 2023-06 CIP-014 Risk Assessment SAR	Kennedy Meier	Electric Reliability Council of Texas, Inc.	2	Texas RE
					Bobbi Welch	MISO	2	RF
					Gregory Campoli	New York Independent System Operator	2	NPCC
					Elizabeth Davis	PJM	2	RF
					Charles Yeung	SPP	2	MRO
Tacoma Public Utilities (Tacoma, WA)	Jennie Wike	1,3,4,5,6	WECC	Tacoma Power	Jennie Wike	Tacoma Public Utilities	1,3,4,5,6	WECC
					John Merrell	Tacoma Public Utilities (Tacoma, WA)	1	WECC
					John Nierenberg	Tacoma Public Utilities (Tacoma, WA)	3	WECC
					Hien Ho	Tacoma Public Utilities (Tacoma, WA)	4	WECC
					Terry Gifford	Tacoma Public Utilities (Tacoma, WA)	6	WECC

Organization Name	Name	Segment(s)	Region	Group Name	Group Member Name	Group Member Organization	Group Member Segment(s)	Group Member Region
					Ozan Ferrin	Tacoma Public Utilities (Tacoma, WA)	5	WECC
ACES Power Marketing	Jodirah Green	1,3,4,5,6	MRO,RF,SERC,Texas RE,WECC	ACES Collaborators	Bob Soloman	Hoosier Energy Electric Cooperative	1	RF
					Jennifer Bray	Arizona Electric Power Cooperative, Inc.	1	WECC
					Nick Fogleman	Prairie Power, Inc.	1,3	SERC
					Marcus Perkins	Southern Maryland Electric Cooperative	3	RF
MRO	Jou Yang	1,2,3,4,5,6	MRO	MRO NSRF	Bobbi Welch	Midcontinent ISO, Inc.	2	MRO
					Chris Bills	City of Independence, Power and Light Department	5	MRO
					Fred Meyer	Algonquin Power Co.	3	MRO

Organization Name	Name	Segment(s)	Region	Group Name	Group Member Name	Group Member Organization	Group Member Segment(s)	Group Member Region
					Christopher Bills	City of Independence Power & Light	3,5	MRO
					Larry Heckert	Alliant Energy Corporation Services, Inc.	4	MRO
					Marc Gomez	Southwestern Power Administration	1	MRO
					Matthew Harward	Southwest Power Pool, Inc. (RTO)	2	MRO
					Bryan Sherrow	Board of Public Utilities	1	MRO
					Terry Harbour	Berkshire Hathaway Energy - MidAmerican Energy Co.	1	MRO
					Terry Harbour	MidAmerican Energy Company	1,3	MRO
					Jamison Cawley	Nebraska Public Power District	1,3,5	MRO
					Seth	Muscatine	1,3,5,6	MRO

Organization Name	Name	Segment(s)	Region	Group Name	Group Member Name	Group Member Organization	Group Member Segment(s)	Group Member Region
					Shoemaker	Power & Water		
					Michael Brytowski	Great River Energy	1,3,5,6	MRO
					Shonda McCain	Omaha Public Power District	6	MRO
					George E Brown	Pattern Operators LP	5	MRO
					George Brown	Acciona Energy USA	5	MRO
					Jaimin Patel	Saskatchewan Power Cooperation	1	MRO
					Kimberly Bentley	Western Area Power Administration	1,6	MRO
					Jay Sethi	Manitoba Hydro	1,3,5,6	MRO
					Michael Ayotte	ITC Holdings	1	MRO
FirstEnergy - FirstEnergy Corporation	Mark Garza	1,3,4,5,6		FE Voter	Julie Severino	FirstEnergy - FirstEnergy Corporation	1	RF
					Aaron Ghodooshim	FirstEnergy - FirstEnergy Corporation	3	RF

Organization Name	Name	Segment(s)	Region	Group Name	Group Member Name	Group Member Organization	Group Member Segment(s)	Group Member Region
					Robert Loy	FirstEnergy - FirstEnergy Solutions	5	RF
					Mark Garza	FirstEnergy- FirstEnergy	1,3,4,5,6	RF
					Stacey Sheehan	FirstEnergy - FirstEnergy Corporation	6	RF
Pacific Gas and Electric Company	Michael Johnson	1,3,5	WECC	PG&E All Segments	Marco Rios	Pacific Gas and Electric Company	1	WECC
					Sandra Ellis	Pacific Gas and Electric Company	3	WECC
					Frank Lee	Pacific Gas and Electric Company	5	WECC
Southern Company - Southern Company Services, Inc.	Pamela Hunter	1,3,5,6	SERC	Southern Company	Matt Carden	Southern Company - Southern Company Services, Inc.	1	SERC
					Joel Dembowski	Southern Company - Alabama Power Company	3	SERC

Organization Name	Name	Segment(s)	Region	Group Name	Group Member Name	Group Member Organization	Group Member Segment(s)	Group Member Region
					Jim Howell, Jr.	Southern Company - Southern Company Generation	5	SERC
					Ron Carlsen	Southern Company - Southern Company Generation	6	SERC
Northeast Power Coordinating Council	Ruida Shu	1,2,3,4,5,6,7,8,9,10	NPCC	NPCC RSC	Gerry Dunbar	Northeast Power Coordinating Council	10	NPCC
					Alain Mukama	Hydro One Networks, Inc.	1	NPCC
					Deidre Altobell	Con Edison	1	NPCC
					Jeffrey Streifling	NB Power Corporation	1	NPCC
					Michele Tondalo	United Illuminating Co.	1	NPCC
					Stephanie Ullah-Mazzuca	Orange and Rockland	1	NPCC
					Michael Ridolfino	Central Hudson Gas &	1	NPCC

Organization Name	Name	Segment(s)	Region	Group Name	Group Member Name	Group Member Organization	Group Member Segment(s)	Group Member Region
						Electric Corp.		
					Randy Buswell	Vermont Electric Power Company	1	NPCC
					James Grant	NYISO	2	NPCC
					John Pearson	ISO New England, Inc.	2	NPCC
					Harishkumar Subramani Vijay Kumar	Independent Electricity System Operator	2	NPCC
					Randy MacDonald	New Brunswick Power Corporation	2	NPCC
					Dermot Smyth	Con Ed - Consolidated Edison Co. of New York	1	NPCC
					David Burke	Orange and Rockland	3	NPCC
					Peter Yost	Con Ed - Consolidated Edison Co. of New York	3	NPCC
					Salvatore	New York	1	NPCC

Organization Name	Name	Segment(s)	Region	Group Name	Group Member Name	Group Member Organization	Group Member Segment(s)	Group Member Region
					Spagnolo	Power Authority		
					Sean Bodkin	Dominion - Dominion Resources, Inc.	6	NPCC
					David Kwan	Ontario Power Generation	4	NPCC
					Silvia Mitchell	NextEra Energy - Florida Power and Light Co.	1	NPCC
					Glen Smith	Entergy Services	4	NPCC
					Sean Cavote	PSEG	4	NPCC
					Jason Chandler	Con Edison	5	NPCC
					Tracy MacNicoll	Utility Services	5	NPCC
					Shivaz Chopra	New York Power Authority	6	NPCC
					Vijay Puran	New York State Department of Public Service	6	NPCC
					ALAN	New York	10	NPCC

Organization Name	Name	Segment(s)	Region	Group Name	Group Member Name	Group Member Organization	Group Member Segment(s)	Group Member Region
					ADAMSON	State Reliability Council		
					David Kiguel	Independent	7	NPCC
					Joel Charlebois	AESI	7	NPCC
					Joshua London	Eversource Energy	1	NPCC
Western Electricity Coordinating Council	Steven Rueckert	10		WECC CIP	Steve Rueckert	WECC	10	WECC
					Morgan King	WECC	10	WECC
					Deb McEndaffer	WECC	10	WECC
					Tom Williams	WECC	10	WECC

1. Do you agree with the proposed scope as described in the Project 2023-06 CIP-014 SAR? If you do not agree, or if you agree but have comments or suggestions for the project scope please provide your recommendation and explanation.	
Tony Eddleman - Nebraska Public Power District - 1,3,5	
Answer	No
Document Name	
Comment	
Due to the critical interdependency between requirement 1 and requirement 2, requirement 2 should be added to the project scope for the drafting team.	
Likes 0	
Dislikes 0	
Response	
The team agrees that clarity regarding the timing of transmission projects included in the risk assessment is needed. The team will also provide clarity on when the 30 (or 60) months clock for the next subsequent risk assessment starts, relative to completion of the R1 risk assessment and the R2 third-party review. The team does not propose to add R2 to the SAR, but will continue to evaluate the need for revisions to R1.	
Jennie Wike - Tacoma Public Utilities (Tacoma, WA) - 1,3,4,5,6 - WECC, Group Name Tacoma Power	
Answer	No
Document Name	
Comment	
Tacoma Power endorses the comments from MRO NSRF. In addition to the MRO NSRF comments, Tacoma Power does not agree with the description in the Cost Impact Assessment section of the SAR. Specifically, the statement that “cost impacts for the proposed changes to CIP-014-3 are expected to be minimal.” The cost impacts are significant for Detail 5, “Revise the risk assessment and clarify how to account for adjacent Transmission stations or Transmission	

substations of differing ownership as well as for those Transmission stations or Transmission substations within line-of-sight to each other." Tacoma Power recommends revising the cost impact section of the SAR to recognize that the work necessary to implement Detail 5 would be significant and may result in additional applicable substations. The SAR is also not clear as to how Detail 5 would impact the Section 4.1.1 applicable facility determination. There are facilities that do not meet the Section 4.1.1 applicability criteria when evaluated separately, but may meet that criteria if Detail 5 is applied. Tacoma Power recommends that the SAR scope include an additional Detail to clarify the evidence required to demonstrate that an entity does not have applicable facilities. Throughout the ERO Enterprise, there is inconsistency on whether entities with a null list of applicable facilities are required to comply with CIP-014 R1-R3.	
Likes 0	
Dislikes 0	
Response	
The team agrees that clarification on the cost impact statement in the SAR was needed. Language was revised in the SAR to clarify there may be cost impacts for revisions to the R1 risk assessment as well as potential downstream costs for additionally identified critical sites. The team acknowledges additional clarity is desirable in CIP-014 for entities dealing with physical proximity determinations as well as different ownership of applicable substations. The team will discuss and evaluate how to revise and clarify the risk assessment process to account for physical proximity considerations (line-of-sight, ease of access, etc.) to identify physically adjacent elements for the purpose of evaluating impact from a physical attack as well as different (incl. joint) ownership of identified adjacent Transmission stations/substations. The reviews will be performed in accordance with the SAR and the NERC Report 'Evaluation of the Physical Security Reliability Standard and Physical Security Attacks to the Bulk-Power System' filed in response to a FERC directive. The team will consider revisions to clarify what is expected during the R1 risk assessment when an entity has no applicable facilities.	
Stephen Stafford - Georgia Transmission Corporation - 1 - SERC	
Answer	No
Document Name	
Comment	

Items 1 – 4 in the Project Scope section of the SAR suggest the standard should be modified to clarify “methods for studying”, “study period”, “frequency of study”, “base cases”, “study decisions”, and other terminology that suggests a planning function is being performed. CIP-014 is only applicable to the owner functional entities who do not perform planning analyses. It does not seem appropriate to add planning analysis requirements in the CIP-014 standard when it is not applicable to planning entities.

Likes 0	
Dislikes 0	

Response
The scope of the SAR is to revise and add clarity to existing R1 requirement expectations as the applicable entities for CIP-014 have already been approved and have risk assessment requirements implemented.
Bobbi Welch - Midcontinent ISO, Inc. - 2, Group Name ISO/RTO Council Standards Review Committee 2023-06 CIP-014 Risk Assessment SAR

Answer	No
Document Name	

Comment
The **ISO/RTO Council (IRC) Standards Review Committee (SRC)**[1] appreciates the opportunity to comment. The SRC agrees that additional clarity and specificity will increase the efficacy of CIP-014. In support of that objective, the SRC recommends that the scope be revised to direct the drafting team to clarify the following areas of ambiguity. • For a transmission station or substation connecting to a collector bus for a generation plant, clarify whether the collector bus is still not considered a Transmission Facility for purposes of Applicability criteria 4.1.1.1 and 4.1.1.2 if the collector bus is the Point of Interconnection for the generation plant. • For Applicability criterion 4.1.1.2, clarify whether the Weight Value per Line is applied per transmission line or per transmission circuit. For example, clarify whether a double-circuit 345-kV line has a weight value of 2600 or 1300. • Clarify the extent to which radial facilities qualify as Transmission Facilities for purposes of the Applicability criteria for CIP-014-3. The Guidelines and Technical Basis for CIP-014-3 (page 21 of the standard) indicates that the Applicability section of CIP-014-3 mirrors the bright line criteria for Medium Impact Transmission Facilities under CIP-002-5.1a. Page 27 of CIP-002-5.1a, in turn, indicates that Criterion 2.5 for identifying Medium Impact Transmission Facilities excludes “radial facilities that would only provide

support for single generation facilities." It is not clear how this exclusion fits in with the Applicability criteria of CIP-014-3. Specifically, it is not clear if these radial facilities should be included in the determination of how many stations or substations a given station or substation connects to, and it is not clear if these radial facilities should be assigned a weight value as incoming or outgoing BES Transmission Lines that connect to another Transmission station or substation.

- Clarify how the exclusion for "radial facilities that would only provide support for single generation facilities" (discussed above) interacts with the statement on page 23 of CIP-002-5.1a that "[w]hen the drafting team uses the term 'Facilities,' there is some latitude to Responsible Entities to determine included Facilities," and with CIP-014-3 Requirement R2, Part 2.3's authorization for TOs to document the technical basis for not modifying an identification in accordance with a recommendation from an unaffiliated verifying entity. Specifically, clarify how much latitude TOs have to interpret the exclusion for "radial facilities that would only provide support for single generation facilities."

[1] For purposes of these comments, the IRC SRC includes the following entities: ERCOT, MISO, NYISO, PJM and SPP.

Likes 0	
Dislikes 0	

Response

The team is not changing the scope to modify the applicability section criteria, including common criteria between CIP-002 and CIP-014. The team will include changes to the risk assessment and provide more clarity on others areas (such as physical proximity) to address the objectives of the SAR.

The team acknowledges additional clarity is desirable in CIP-014 for entities dealing with physical proximity determinations as well as different ownership of applicable substations. The team will discuss and evaluate how to revise and clarify the risk assessment process to account for physical proximity considerations (line-of-sight, ease of access, etc.) to identify physically adjacent elements for the purpose of evaluating impact from a physical attack as well as different (incl. joint) ownership of identified adjacent Transmission stations/substations. The reviews will be performed in accordance with the SAR and the NERC Report 'Evaluation of the Physical Security Reliability Standard and Physical Security Attacks to the Bulk-Power System' filed in response to a FERC directive.

Kennedy Meier - Electric Reliability Council of Texas, Inc. - 2

Answer	No
Document Name	

Comment

ERCOT joins the comments submitted by the ISO/RTO Council (IRC) Standards Review Committee (SRC) and adopts them as its own.	
Likes 0	
Dislikes 0	
Response	
Thank you for your comments. See the response to the ISO/RTO Council (IRC) Standards Review Committee (SRC).	
Jou Yang - MRO - 1,2,3,4,5,6 - MRO, Group Name MRO NSRF	
Answer	Yes
Document Name	
Comment	

The MRO NSRF agrees with the scope of the SAR as having identified the aspects of CIP-014 R1 that require clarification, but disagrees with some of the subsequent detailed instructions to the drafting team as follows:

Detail 1, please replace the final bolded item “BPS” with “BES.” Industry has already identified all BES Transmission Elements when the term was redefined for 2014. There are no such defined lists of BPS equipment. Applicability Section 4.1.1 and parts already provide such specificity as has already been validated as sufficient by the NERC report filed with FERC. There is no justification to arbitrarily reference a broader BPS within this standard, and Section 4.1.1 renders the change moot.

Detail 3 takes the general guidance of Scope item 3 but specifies “defining ‘inoperable’ or ‘damaged’ substations”, which is inconsistent with Scope item 4 that will require simulating complete loss. The sentence “Criteria should include defining “inoperable” or “damaged” substations such that the intent of the risk assessment is clear.” binds the drafting team to maintain and define language inconsistent with Scope item 4 and should be removed. Removing this sentence would free the drafting team to replace this language with something like “destroyed” which could then be defined in accordance with Scope item 4.

Detail 5 can provide a list of items requiring consideration, but it must be made clear to the drafting team that while these items must be considered, they do not necessarily have to be modeled as also lost if an entity’s evaluation cites mitigating circumstances such as the adjacent or line-of-sight Facility already having or implementing security measures to counter these threats before the next risk assessment is due (consistent with Scope item 2). Any items listed for required consideration should be sufficiently defined and limited so

as not to require the equivalent performance of a full R4 threat assessment.	
Likes 1	Tacoma Public Utilities (Tacoma, WA), 1,3,4,5,6, Wike Jennie
Dislikes 0	
Response	
We agree with replacing “BPS” with “BES” in item 1 since “BES” is a defined and well understood term that is appropriately applied in the context of CIP-014. The team plans to review usage of the terms ‘inoperable’ and/or ‘damaged’ in light of revising the risk assessment to simulate the complete loss of a Transmission station or Transmission substation that includes the simultaneous loss of all station elements and does not rely on local system protection for relay clearance (as noted in item 4). To allow for this, and align with item 4, the sentence “Criteria should include defining “inoperable” or “damaged” substations such that the intent of the risk assessment is clear” will be re-worded to “Clarify the how the terms “inoperable” and “damaged” should be reflected in the risk assessment.” The team acknowledges additional clarity is desirable in CIP-014 for entities dealing with physical proximity determinations as well as different ownership of applicable substations. The team will discuss and evaluate how to revise and clarify the risk assessment process to account for physical proximity considerations (line-of-sight, ease of access, etc.) to identify physically adjacent elements for the purpose of evaluating impact from a physical attack as well as different (incl. joint) ownership of identified adjacent Transmission stations/substations. The reviews will be performed in accordance with the SAR and the NERC Report ‘Evaluation of the Physical Security Reliability Standard and Physical Security Attacks to the Bulk-Power System’ filed in response to a FERC directive.	
Mark Garza - FirstEnergy - FirstEnergy Corporation - 1,3,4,5,6, Group Name FE Voter	
Answer	Yes
Document Name	
Comment	
FirstEnergy supports the scope of the SAR and further supports EEI comments.	
Likes 0	
Dislikes 0	
Response	

Thank you for your comments. See the response to EEI.	
Jennifer Bray - Arizona Electric Power Cooperative, Inc. - 1	
Answer	Yes
Document Name	
Comment	

AEPC has signed on to ACES comments below:

Every critical station within the scope of CIP-014 poses different challenges and risks to consider. Each entity has different people, constraints (physical, technological, electrical, etc.), and risks; therefore, the expectation that entities would have "reasonably consistent" approaches to CIP-014 is not a reasonable expectation.

This SAR's proposed changes are similar to previous changes to the CIP standards, such as CIP-002-3 (risk based) versus CIP-002-5.1a (bright line). This SAR should seek to establish a minimum baseline of risks/risk attributes that NERC, FERC, and the industry believe need to be evaluated to have a more "reasonably consistent" approach. Establishing a baseline, such as logging and monitoring in CIP-007, or bright line in CIP-002, would provide some of the consistency the SAR proposes to provide, but each approach may still be different. If the Standards Drafting Team (SDT) were to add baseline risks for consideration, they should not be overly prescriptive, rather they should provide a minimum list of risks to consider and any exclusions to allow the entity flexibility in its approach.

The cost impact cannot be overlooked in the SAR. If a set of risk criteria is established as a result of this project and an entity did not previously consider one or more of those risk, a control would need to be created to mitigate the risk, which could come with a cost. The proposed changes to CIP-014 will require each entity within the scope to rewrite its CIP-014 program and reevaluate each risk assessment, which could also come with a cost.

Likes 0	
Dislikes 0	
Response	

The team acknowledges additional clarity is desirable in CIP-014 for entities dealing with physical proximity determinations as well as different ownership of applicable substations. The team will discuss and evaluate how to revise and clarify the risk assessment process to account for physical proximity considerations (line-of-sight, ease of access, etc.) to identify physically adjacent elements for the purpose of evaluating impact from a physical attack as well as different (incl. joint) ownership of identified adjacent Transmission

stations/substations. The reviews will be performed in accordance with the SAR and the NERC Report 'Evaluation of the Physical Security Reliability Standard and Physical Security Attacks to the Bulk-Power System' filed in response to a FERC directive. The team will also revise the SAR to clarify specific requirement language regarding evaluating instability, uncontrolled separation, and Cascading within an Interconnection (by conducting steady-state and dynamic studies) while allowing for entity-specific flexibility in the development of study methods. The team agrees that clarification on the cost impact statement in the SAR was needed. Language was revised in the SAR to clarify there may be cost impacts for revisions to the R1 risk assessment as well as potential downstream costs for additionally identified critical sites.	
Ruida Shu - Northeast Power Coordinating Council - 1,2,3,4,5,6,7,8,9,10 - NPCC, Group Name NPCC RSC	
Answer	Yes
Document Name	
Comment	
While we agree that the identification of applicable facilities criteria could benefit from more clarity on the initiating event(s) triggering the resulting consequence "…that if rendered inoperable or damaged as a result of a physical attack could result in instability, uncontrolled separation, or Cascading within an Interconnection.", changes, as proposed in the SAR, will impose a tremendous effort on entities to achieve compliance.	
Likes 0	
Dislikes 0	
Response	
While the team is not expanding the scope of the SAR to modify the applicability section, the team acknowledges additional clarity is desirable in CIP-014 for entities dealing with physical proximity determinations as well as different ownership of applicable substations. The team will discuss and evaluate how to revise and clarify the risk assessment process to account for physical proximity considerations (line-of-sight, ease of access, etc.) to identify physically adjacent elements for the purpose of evaluating impact from a physical attack as well as different (incl. joint) ownership of identified adjacent Transmission stations/substations. The reviews will be performed in accordance with the SAR and the NERC Report 'Evaluation of the Physical Security Reliability Standard and Physical Security Attacks to the Bulk-Power System' filed in response to a FERC directive.	

The team plans to review usage of the terms 'inoperable' and/or 'damaged' in light of revising the risk assessment to simulate the complete loss of a Transmission station or Transmission substation that includes the simultaneous loss of all station elements and does not rely on local system protection for relay clearance (as noted in item 4). To allow for this, and align with item 4, the sentence "Criteria should include defining "inoperable" or "damaged" substations such that the intent of the risk assessment is clear" will be re-worded to "Clarify the how the terms "inoperable" and "damaged" should be reflected in the risk assessment." The draft with proposed changes to CIP-014 will be shared with NERC compliance to provide feedback on if the team's proposed requirements and measures are clear and auditable.	
April Ford - Southern Indiana Gas and Electric Co. - 3,5,6 - RF	
Answer	Yes
Document Name	
Comment	
Southern Indiana Gas and Electric Company d/b/a CenterPoint Energy Indiana (SIGE) agrees with the proposed scope of the SAR.	
Likes 0	
Dislikes 0	
Response	
Thank you for the comment.	
Lucinda Bradshaw - Oncor Electric Delivery - 1 - Texas RE	
Answer	Yes
Document Name	
Comment	
Oncor encourages NERC to consider the vast diversity of the Bulk Power Systems owned and operated by the Registered Entities to which the new CIP-014 would apply (*e.g.,* the varied operating environments or different market structures in which those Registered Entities do business) and to acknowledge in the revised Standard the possibility that the criteria for the required risk assessment may be revised as needed to enable the affected Registered Entity to properly assess its Transmission stations and Transmission Substations.	

Likes 0	
Dislikes 0	
Response	
The team will continue to review ERO-wide differences between entities during the standards development process, and consider all comments received from each period as well as through discussions during team meetings.	
Michael Johnson - Pacific Gas and Electric Company - 1,3,5 - WECC, Group Name PG&E All Segments	
Answer	Yes
Document Name	
Comment	

PG&E has the following input related to the Detailed Description in the SAR starting on page 3:

For Item 1; PG&E concurs and supports the clarification of the risk assessment methods for studying instability, uncontrolled separation, and Cascading. PG&E also recommends that as part of the clarification, it is important for NERC to consider that registered entities will need to evaluate each broad type of stability based on their regional requirements. For instance, PG&E is currently following the TPL 001-WECC-CRT-3.2 criterion for voltage and frequency performance to assess the results of the Transient Stability analysis.

For Item 2; PG&E agrees that the statement "including only the projects that are appropriate to the periodicity of the entity's risk assessment studies" should be clarified, as the existing language could have different interpretations.

For Item 3; PG&E has no comment.

For Item 4; PG&E supports the input has a comment regarding the following statement "it is not clear that the risk assessment requires registered entities to use models that correlate to periods of high flows or high stress on their system". Since each region experiences different high flow patterns and stressed conditions, PG&E suggests that NERC provide clarifications and guidelines for defining the high stressed scenarios but allows entities to define their scenarios based on their unique system conditions and their respective region.

For Item 5; PG&E encourages clarification regarding what physically adjacent elements shall be considered within the risk assessment. In addition, if a substation is identified as critical based on the study and related substation (asset) is not owned by the registered entity that performed the study, clarification should be provided regarding the responsibilities between that registered entity and the other asset owner.

For the Cost Impact Assessment on page 5, PG&E provides the following; PG&E understands that the NERC proposed changes are targeting to add clarity to the current standard and not changing the existing requirements. However, implementing the proposed clarifications may result in more substations requiring security upgrades and that would impact the associated costs.	
Likes 0	
Dislikes 0	
Response	
The team will also revise the SAR to clarify specific requirement language regarding evaluating instability, uncontrolled separation, and Cascading within an Interconnection (by conducting steady-state and dynamic studies) while allowing for entity-specific flexibility in the development of study methods. The team agrees that clarity regarding the timing of transmission projects included in the risk assessment is needed. The team will also provide clarity on when the 30 (or 60) months clock for the next subsequent risk assessment starts, relative to completion of the R1 risk assessment and the R2 third party review. The team does not propose to add R2 to the SAR, but will continue to evaluate the need for revisions to R1. The team removed the sentence regarding high flows or high stress. The team will add clarity to the risk assessment requirement regarding what are appropriate study decisions and what should be considered for the selection of model cases and any applied scenario conditions. The team acknowledges additional clarity is desirable in CIP-014 for entities dealing with physical proximity determinations as well as different ownership of applicable substations. The team will discuss and evaluate how to revise and clarify the risk assessment process to account for physical proximity considerations (line-of-sight, ease of access, etc.) to identify physically adjacent elements for the purpose of evaluating impact from a physical attack as well as different (incl. joint) ownership of identified adjacent Transmission stations/substations. The reviews will be performed in accordance with the SAR and the NERC Report 'Evaluation of the Physical Security Reliability Standard and Physical Security Attacks to the Bulk-Power System' filed in response to a FERC directive. The team agrees that clarification on the cost impact statement in the SAR was needed. Language was revised in the SAR to clarify there may be cost impacts for revisions to the R1 risk assessment as well as potential downstream costs for additionally identified critical sites.	
Chantal Mazza - Hydro-Quebec (HQ) - 1 - NPCC	

Answer	Yes
Document Name	
Comment	
While we agree that the identification of applicable facilities criteria could benefit from more clarity on the initiating event(s) triggering the resulting consequence "…that if rendered inoperable or damaged as a result of a physical attack could result in instability, uncontrolled separation, or Cascading within an Interconnection.", changes, as proposed in the SAR, will impose a tremendous effort on entities to achieve compliance.	
Likes 0	
Dislikes 0	
Response	
The team plans to review usage of the terms 'inoperable' and/or 'damaged' in light of revising the risk assessment to simulate the complete loss of a Transmission station or Transmission substation that includes the simultaneous loss of all station elements and does not rely on local system protection for relay clearance (as noted in item 4). To allow for this, and align with item 4, the sentence "Criteria should include defining "inoperable" or "damaged" substations such that the intent of the risk assessment is clear" will be re-worded to "Clarify the how the terms "inoperable" and "damaged" should be reflected in the risk assessment." While the team is not expanding the scope of the SAR to modify the applicability section, the team acknowledges additional clarity is desirable in CIP-014 for entities dealing with physical proximity determinations as well as different ownership of applicable substations. The team will discuss and evaluate how to revise and clarify the risk assessment process to account for physical proximity considerations (line-of-sight, ease of access, etc.) to identify physically adjacent elements for the purpose of evaluating impact from a physical attack as well as different (incl. joint) ownership of identified adjacent Transmission stations/substations. The reviews will be performed in accordance with the SAR and the NERC Report 'Evaluation of the Physical Security Reliability Standard and Physical Security Attacks to the Bulk-Power System' filed in response to a FERC directive. The draft with proposed changes to CIP-014 will be shared with NERC compliance to provide feedback on if the team's proposed requirements and measures are clear and auditable.	
Brad Harris - CenterPoint Energy Houston Electric, LLC - 1 - Texas RE	
Answer	Yes

Document Name	
Comment	
CenterPoint Energy Houston Electric, LLC (CEHE) agrees with the proposed scope of the SAR.	
Likes 0	
Dislikes 0	
Response	
Thank you for your comment.	
Jay Sethi - Manitoba Hydro - 1,3,5,6 - MRO	
Answer	Yes
Document Name	
Comment	

Manitoba Hydro agrees with the scope of the SAR. Further clarification of CIP-014 R1 as proposed in the SAR will help the industry as a whole. Manitoba Hydro is requesting additionally that the SAR provide clarity on whether past studies can be relied upon if there are no material changes in the network since the last CIP-014 assessment, provided that the Transmission Owner has performed an acceptable risk assessment which meets the requirements identified in the scope of this SAR? This would reduce study burden on industry; especially on entities studying every 30 months.

Manitoba Hydro also has some comments relating to the detailed description items and suggests the following changes:

In detailed description number 1, replace the term “BPS” with “BES” which is well defined and for which a well established inventory of elements exists.

In detailed description number 3, it takes the general guidance of Scope item 3 but specifies “defining ‘inoperable’ or ‘damaged’ substations”, which is inconsistent with Scope item 4 that will require simulating complete loss. The sentence “Criteria should include defining “inoperable” or “damaged” substations such that the intent of the risk assessment is clear.” binds the drafting team to maintain and define language inconsistent with Scope item 4 and should be removed. The standard drafting team should be free to review the option of changing the wording to add clarity, as well as the option to further define the terms.

In detailed description number 5, it can provide a list of items requiring consideration, but it must be made clear to the drafting team that while these items must be considered, they do not necessarily have to be modeled as also lost if an entity's evaluation cites mitigating circumstances such as the adjacent or line-of-sight Facility already having or implementing security measures to counter threats before the next risk assessment is due (consistent with Scope item 2). Any items listed for required consideration should be sufficiently defined and limited so as not to require the equivalent performance of a full R4 threat assessment.	
Likes 0	
Dislikes 0	
Response	
We agree with replacing "BPS" with "BES" in item 1 since "BES" is a defined and well understood term that is appropriately applied in the context of CIP-014. The team plans to review usage of the terms 'inoperable' and/or 'damaged' in light of revising the risk assessment to simulate the complete loss of a Transmission station or Transmission substation that includes the simultaneous loss of all station elements and does not rely on local system protection for relay clearance (as noted in item 4). To allow for this, and align with item 4, the sentence "Criteria should include defining "inoperable" or "damaged" substations such that the intent of the risk assessment is clear" will be re-worded to "Clarify the how the terms "inoperable" and "damaged" should be reflected in the risk assessment." The team acknowledges additional clarity is desirable in CIP-014 for entities dealing with physical proximity determinations as well as different ownership of applicable substations. The team will discuss and evaluate how to revise and clarify the risk assessment process to account for physical proximity considerations (line-of-sight, ease of access, etc.) to identify physically adjacent elements for the purpose of evaluating impact from a physical attack as well as different (incl. joint) ownership of identified adjacent Transmission stations/substations. The reviews will be performed in accordance with the SAR and the NERC Report 'Evaluation of the Physical Security Reliability Standard and Physical Security Attacks to the Bulk-Power System' filed in response to a FERC directive.	
John Pearson - ISO New England, Inc. - 2	
Answer	Yes
Document Name	
Comment	
ISO New England supports the changes to make the standard result in more uniform determinations that will most appropriately identify	

critical infrastructure and evaluate whether the physical security protection requirements are adequate to address the risks associated with physical attacks on Bulk Power System (BPS) Facilities. The owners of the BPS Facilities are the most appropriate entities to make initial determinations and appropriate identification.	
Likes 0	
Dislikes 0	
Response	
Thank you for your comment.	
Michael Jones - National Grid USA - 1,3,5	
Answer	Yes
Document Name	
Comment	
RE: Project Scope Item 2: Please consider adding to the Project Scope and Detailed Description that the amount of time between risk assessments should be clarified. Requirement R1 Part 1.1 of CIP-014-3 states "Subsequent risk assessments shall be performed: At least once every 30 calendar months… or, At least once every 60 calendar months… (as verified according to Requirement R2)" This could be interpreted as the 30 or 60 calendar months clock for the next subsequent risk assessment starts when Requirement R2 is completed, i.e., up to 90 + 60 days after Requirement R1 was completed. This could potentially also be interpreted as the 30 or 60 calendar months clock for the next subsequent risk assessment starts once Requirement R1 has been completed. Please consider that the SAR should specifically give the drafting team the ability to resolve this issue.	
Likes 0	
Dislikes 0	
Response	
The team agrees that clarity regarding the timing of transmission projects included in the risk assessment is needed. The team will also provide clarity on when the 30 (or 60) months clock for the next subsequent risk assessment starts, relative to completion of the R1 risk assessment and the R2 third party review. The team does not propose to add R2 to the SAR, but will continue to evaluate the need for revisions to R1.	

Mark Gray - Edison Electric Institute - NA - Not Applicable - NA - Not Applicable	
Answer	Yes
Document Name	
Comment	

EEI supports adding requirements that provide additional clarity to existing risk assessment methods for studying instability, uncontrolled separation, and cascading. However, we would not support changes to requirements that resulted in modifications that deviated from the clearly defined project scope as contained in this SAR or added prescriptive requirements that did not consider regional differences and geography. Standards should be flexible, and risk based.

EEI asks for clarity to Item 3 in the SAR Project Scope where it uses the term “adequacy”. As currently written this Item could be understood to require changes to CIP-014 that would require the development of prescriptive requirements for both documentation and entity studies that could be interpreted as deviating from the current Risk Based Reliability Standard processes.

EEI also requests clarity on the intended scope of Item 5 in the SAR Project Scope. Specifically, clarity is needed as it relates to Transmission stations or substations of differing ownership, as well as transmission stations or substations within line-of-site to each other. However, it should be clear that responsible entities need the authority to request certain information from the responsible entities identified in Item 5, to conduct their CIP-014 studies (i.e., models, actual clearing times, etc.).

Likes 0	
Dislikes 0	

Response

The team will revise the SAR to clarify specific requirement language regarding evaluating instability, uncontrolled separation, and Cascading within an Interconnection (by conducting steady-state and dynamic studies) while allowing for entity-specific flexibility in the development of study methods.

The team agrees that the revisions to R1 should not be overly prescriptive in the outcome of study decisions and documentation. The approach by the team will consider entity flexibility and increased clarity on expectations related to Item 3.

The team acknowledges additional clarity is desirable in CIP-014 for entities dealing with physical proximity determinations as well as different ownership of applicable substations. The team will discuss and evaluate how to revise and clarify the risk assessment process to

account for physical proximity considerations (line-of-sight, ease of access, etc.) to identify physically adjacent elements for the purpose of evaluating impact from a physical attack as well as different (incl. joint) ownership of identified adjacent Transmission stations/substations. The reviews will be performed in accordance with the SAR and the NERC Report 'Evaluation of the Physical Security Reliability Standard and Physical Security Attacks to the Bulk-Power System' filed in response to a FERC directive.	
Alan Kloster - Evergy - 1,3,5,6 - MRO	
Answer	Yes
Document Name	
Comment	
Evergy supports and incorporates by reference the comments of the Edison Electric Institute (EEI) for question #1.	
Likes 0	
Dislikes 0	
Response	
Thank you for your comment. See response to EEI.	
Clay Walker - Cleco Corporation - 1,3,5,6 - SERC	
Answer	Yes
Document Name	
Comment	
Cleco support the comments provided by EEI.	
Likes 0	
Dislikes 0	
Response	
Thank you for your comment. See response to EEI.	
Richard Vendetti - NextEra Energy - 5	

Answer	Yes
Document Name	
Comment	

NEE is in agreement with EEI's comments.

EEI supports adding requirements that provide additional clarity to existing risk assessment methods for studying instability, uncontrolled separation, and cascading. However, we would not support changes to requirements that resulted in modifications that deviated from the clearly defined project scope as contained in this SAR or added prescriptive requirements that did not consider regional differences and geography. Standards should be flexible, and risk based.

EEI asks for clarity to Item 3 in the SAR Project Scope where it uses the term "adequacy". As currently written this Item could be understood to require changes to CIP-014 that would require the development of prescriptive requirements for both documentation and entity studies that could be interpreted as deviating from the current Risk Based Reliability Standard processes.

EEI also requests clarity on the intended scope of Item 5 in the SAR Project Scope. Specifically, clarity is needed as it relates to Transmission stations or substations of differing ownership, as well as transmission stations or substations within line-of-site to each other. However, it should be clear that responsible entities need the authority to request certain information from the responsible entities identified in Item 5, to conduct their CIP-014 studies (i.e., models, actual clearing times, etc.).

Likes 0	
Dislikes 0	
Response	
Thank you for your comment. See response to EEI.	
Ellese Murphy - Duke Energy - 1,3,5,6 - MRO,WECC,Texas RE,SERC,RF	
Answer	Yes
Document Name	
Comment	

Duke Energy supports EEI's comments.	
Likes 0	
Dislikes 0	
Response	
Thank you for your comment. See response to EEI.	
Rachel Coyne - Texas Reliability Entity, Inc. - 10	
Answer	Yes
Document Name	
Comment	
Texas RE supports this project to ensure adequacy and consistency in the CIP-014 approach. Texas RE recommends the SAR indicate whether the terms “inoperable” or “damaged” will be defined in the NERC Glossary.	
Likes 0	
Dislikes 0	
Response	
The team plans to review usage of the terms ‘inoperable’ and/or ‘damaged’ in light of revising the risk assessment to simulate the complete loss of a Transmission station or Transmission substation that includes the simultaneous loss of all station elements and does not rely on local system protection for relay clearance (as noted in item 4). To allow for this, and align with item 4, the sentence “Criteria should include defining “inoperable” or “damaged” substations such that the intent of the risk assessment is clear” will be re-worded to “Clarify the how the terms “inoperable” and “damaged” should be reflected in the risk assessment.”	
Junji Yamaguchi - Hydro-Quebec (HQ) - 1,5	
Answer	Yes
Document Name	
Comment	

While we agree that the identification of applicable facilities criteria could benefit from more clarity on the initiating event(s) triggering the resulting consequence "…that if rendered inoperable or damaged as a result of a physical attack could result in instability, uncontrolled separation, or Cascading within an Interconnection.", changes, as proposed in the SAR, will impose a tremendous effort on entities to achieve compliance.

Likes 0	
Dislikes 0	

Response

The team plans to review usage of the terms 'inoperable' and/or 'damaged' in light of revising the risk assessment to simulate the complete loss of a Transmission station or Transmission substation that includes the simultaneous loss of all station elements and does not rely on local system protection for relay clearance (as noted in item 4). To allow for this, and align with item 4, the sentence "Criteria should include defining "inoperable" or "damaged" substations such that the intent of the risk assessment is clear" will be re-worded to "Clarify the how the terms "inoperable" and "damaged" should be reflected in the risk assessment."

The draft with proposed changes to CIP-014 will be shared with NERC compliance to provide feedback on if the team's proposed requirements and measures are clear and auditable.

Jodirah Green - ACES Power Marketing - 1,3,4,5,6 - MRO,WECC,Texas RE,SERC,RF, Group Name ACES Collaborators

Answer	Yes
Document Name	

Comment

ACES agrees with the scope of the SAR, with the following comments:

Every critical station within the scope of CIP-014 poses different challenges and risks to consider. Each entity has different people, constraints (physical, technological, electrical, etc.), and risks; therefore, the expectation that entities would have "reasonably consistent" approaches to CIP-014 is not a reasonable expectation.

This SAR's proposed changes are similar to previous changes to the CIP standards, such as CIP-002-3 (risk based) versus CIP-002-5.1a (bright line). This SAR should seek to establish a minimum baseline of risks/risk attributes that NERC, FERC, and the industry believe need to be evaluated to have a more "reasonably consistent" approach. Establishing a baseline, such as logging and monitoring in CIP-007, or

bright line in CIP-002, would provide some of the consistency the SAR proposes to provide, but each approach may still be different. If the Standards Drafting Team (SDT) were to add baseline risks for consideration, they should not be overly prescriptive, rather they should provide a minimum list of risks to consider and any exclusions to allow the entity flexibility in its approach. The cost impact cannot be overlooked in the SAR. If a set of risk criteria is established as a result of this project and an entity did not previously consider one or more of those risk, a control would need to be created to mitigate the risk, which could come with a cost. The proposed changes to CIP-014 will require each entity within the scope to rewrite its CIP-014 program and reevaluate each risk assessment, which could also come with a cost.	
Likes 0	
Dislikes 0	
Response	
The team acknowledges additional clarity is desirable in CIP-014 for entities dealing with physical proximity determinations as well as different ownership of applicable substations. The team will discuss and evaluate how to revise and clarify the risk assessment process to account for physical proximity considerations (line-of-sight, ease of access, etc.) to identify physically adjacent elements for the purpose of evaluating impact from a physical attack as well as different (incl. joint) ownership of identified adjacent Transmission stations/substations. The reviews will be performed in accordance with the SAR and the NERC Report 'Evaluation of the Physical Security Reliability Standard and Physical Security Attacks to the Bulk-Power System' filed in response to a FERC directive. The team is not changing the scope to modify the applicability section criteria, including common criteria between CIP-002 and CIP-014. The team will include changes to the risk assessment and provide more clarity on others areas (such as physical proximity) to address the objectives of the SAR. The team agrees that clarification on the cost impact statement in the SAR was needed. Language was revised in the SAR to clarify there may be cost impacts for revisions to the R1 risk assessment as well as potential downstream costs for additionally identified critical sites.	
Dwanique Spiller - Berkshire Hathaway - NV Energy - 5	
Answer	Yes
Document Name	
Comment	

NV Energy agrees with the scope of the SAR as having identified the aspects of CIP-014 R1 that require clarification, but disagrees with some of the subsequent detailed instructions to the drafting team as follows:

Detail 1, please replace the final bolded item “BPS” with “BES.” Industry has already identified all BES Transmission Elements when the term was redefined for 2014. There are no such defined lists of BPS equipment. Applicability Section 4.1.1 and parts already provide such specificity as has already been validated as sufficient by the NERC report filed with FERC. There is no justification to arbitrarily reference a broader BPS within this standard, and Section 4.1.1 renders the change moot.

Detail 3 takes the general guidance of Scope item 3 but specifies “defining ‘inoperable’ or ‘damaged’ substations”, which is inconsistent with Scope item 4 that will require simulating complete loss. The sentence “Criteria should include defining “inoperable” or “damaged” substations such that the intent of the risk assessment is clear.” binds the drafting team to maintain and define language inconsistent with Scope item 4 and should be removed. Removing this sentence would free the drafting team to replace this language with something like “destroyed” which could then be defined in accordance with Scope item 4.

Detail 5 can provide a list of items requiring consideration, but it must be made clear to the drafting team that while these items must be considered, they do not necessarily have to be modeled as also lost if an entity’s evaluation cites mitigating circumstances such as the adjacent or line-of-sight Facility already having or implementing security measures to counter these threats before the next risk assessment is due (consistent with Scope item 2). Any items listed for required consideration should be sufficiently defined and limited so as not to require the equivalent performance of a full R4 threat assessment.

Likes 0	
Dislikes 0	

Response

We agree with replacing “BPS” with “BES” in item 1 since “BES” is a defined and well understood term that is appropriately applied in the context of CIP-014.

The team plans to review usage of the terms ‘inoperable’ and/or ‘damaged’ in light of revising the risk assessment to simulate the complete loss of a Transmission station or Transmission substation that includes the simultaneous loss of all station elements and does not rely on local system protection for relay clearance (as noted in item 4). To allow for this, and align with item 4, the sentence “Criteria should include defining “inoperable” or “damaged” substations such that the intent of the risk assessment is clear” will be re-worded to “Clarify the how the terms “inoperable” and “damaged” should be reflected in the risk assessment.”

The team acknowledges additional clarity is desirable in CIP-014 for entities dealing with physical proximity determinations as well as different ownership of applicable substations. The team will discuss and evaluate how to revise and clarify the risk assessment process to account for physical proximity considerations (line-of-sight, ease of access, etc.) to identify physically adjacent elements for the purpose of evaluating impact from a physical attack as well as different (incl. joint) ownership of identified adjacent Transmission stations/substations. The reviews will be performed in accordance with the SAR and the NERC Report 'Evaluation of the Physical Security Reliability Standard and Physical Security Attacks to the Bulk-Power System' filed in response to a FERC directive.

Pamela Hunter - Southern Company - Southern Company Services, Inc. - 1,3,5,6 - SERC, Group Name Southern Company	
Answer	Yes
Document Name	
Comment	
Southern Company agrees with the submitted comments by EEI.	
Likes 0	
Dislikes 0	
Response	
Thank you for your comment. See response to EEI.	
Daniel Gacek - Exelon - 1,3	
Answer	Yes
Document Name	
Comment	
Exelon generally supports the proposed scope of this project, and we support the comments submitted by the EEI. We offer the following additional comments to help refine the scope. For Item 4, there is inconsistency between the Project Scope section and the Detailed Description, specifically in the Project Scope section it states "simultaneous loss of all station elements and does not rely on local system protection for relay clearance", however in the	

Detailed Description section it seems to leave open to the SDT to determine how to resolve the initiating event assumptions. The word simultaneous in the Project Scope section is also potentially problematic. In dynamic studies there may be a significant difference between literally simultaneous and a couple cycles (milliseconds) of delay. Some physical threats can result in simultaneous loss of station elements, other physical threats may result in delay between loss of station elements. Modifications to the standard should include the latitude for the planning analysis to align with the physical threats with regard to delay or lack of delay between the loss of substation elements. For Item 5, similar to Item 4, the standard should include the latitude for the planning analysis to align with the identified physical threats with regard to delay or lack of delay between the loss of substation elements.

Likes 0	
Dislikes 0	

Response
The team plans to review usage of the terms ‘inoperable’ and/or ‘damaged’ in light of revising the risk assessment to simulate the complete loss of a Transmission station or Transmission substation that includes the simultaneous loss of all station elements and does not rely on local system protection for relay clearance (as noted in item 4). To allow for this, and align with item 4, the sentence “Criteria should include defining “inoperable” or “damaged” substations such that the intent of the risk assessment is clear” will be re-worded to “Clarify the how the terms “inoperable” and “damaged” should be reflected in the risk assessment.” The team will consider other methods to evaluate a physical attack that are appropriate for the R1 risk assessment and may leverage the NERC Report ‘Evaluation of the Physical Security Reliability Standard and Physical Security Attacks to the Bulk-Power System’ filed in response to a FERC directive.

Marcus Bortman - APS - Arizona Public Service Co. - 1,3,5,6	
Answer	Yes
Document Name	

Comment
AZPS agrees with EEI in supporting the development of standards which provide clarity to existing risk assessment methods for studying instability, uncontrolled separation, and cascading while maintaining standards that are flexible and risk based. In regard to item 5, AZPS

would also like clarity as to the intended scope of changes relating to transmission substations within close physical proximity/line of sight and the required information sharing between entities when differing ownership is a factor.	
Likes 0	
Dislikes 0	
Response	
The team acknowledges additional clarity is desirable in CIP-014 for entities dealing with physical proximity determinations as well as different ownership of applicable substations. The team will discuss and evaluate how to revise and clarify the risk assessment process to account for physical proximity considerations (line-of-sight, ease of access, etc.) to identify physically adjacent elements for the purpose of evaluating impact from a physical attack as well as different (incl. joint) ownership of identified adjacent Transmission stations/substations. The reviews will be performed in accordance with the SAR and the NERC Report 'Evaluation of the Physical Security Reliability Standard and Physical Security Attacks to the Bulk-Power System' filed in response to a FERC directive.	
Lori Frisk - Allete - Minnesota Power, Inc. - 1	
Answer	Yes
Document Name	
Comment	
Minnesota Power supports the comments submitted by Edison Electric Institute (EEI) and the MRO NERC Standards Review Forum (NSRF).	
Likes 0	
Dislikes 0	
Response	
Thank you for your comment. See the responses for EEI and MRO NSRF.	
David Jendras Sr - Ameren - Ameren Services - 1,3,6	
Answer	Yes
Document Name	

Comment
Ameren agress with and supports EEI comments. In addition we would like more clarity around two items in this SAR: (1) the word "posting" used in Page 3, Project Scope, Item 3. (2) the phrase "all station elements" used in Page 4, Project Scope, Item 4. Does this include control houses, one or multiple?

Likes 0	
Dislikes 0	

Response
Thank you for your comment. See response to EEI. Additionally, the team agrees with removing the word “posting”. The team will also provide clarity on the details of what should be included within any simulation.

Kent Feliks - AEP - 3,5,6	
Answer	Yes
Document Name	

Comment
Kent Feliks on behalf of AEP in Segments 1, 3, 5, 6 We recommend removal of the statement, “To ensure that no instability occurs in simulation, registered entities can cover each broad type of stability analysis via Contingency analysis, governor power flow analysis, and transient stability analysis.” The standard does not seek to ensure that "no instability occurs in simulation". It seeks to indentify "widespread instability... within an Interconnection". Per FERC Order 802, only instability “critical to the operation of the Interconnection” is necessary to identify. The SDT must therefore qualify “instability” so that only critical instabilities are identified, for example, instability that results in such a loss of generation as to cause UFLS activation or that may lead to further cascading or to uncontrolled separation. Additionally, listing three methods of identifying instability as “via Contingency analysis, governor power flow analysis, and transient stability analysis” is contrary to other statements implying that dynamic simulations must be run to determine if there is instability. Contingency powerflow analysis and governor

powerflow analysis are not forms of dynamic simulation.	
Likes 0	
Dislikes 0	
Response	
The team agrees that the purpose of the CIP-014 standard is to identify impacts within an Interconnection. The term “widespread” will not be introduced, as it was removed from a previous version of the standard (see CIP-014-3 version history). Revisions to the SAR will be made to clarify the scope of instability being evaluated as well as language regarding types of studies.	
Lindsey Mannion - ReliabilityFirst - 10	
Answer	Yes
Document Name	
Comment	
Likes 0	
Dislikes 0	
Response	
Thank you.	
Cain Braveheart - Bonneville Power Administration - 1,3,5,6 - WECC	
Answer	Yes
Document Name	
Comment	
Likes 0	
Dislikes 0	
Response	

Thank you.	
Donna Wood - Tri-State G and T Association, Inc. - 1,3,5	
Answer	Yes
Document Name	
Comment	
Likes 0	
Dislikes 0	
Response	
Thank you.	
Joshua London - Eversource Energy - 1,3	
Answer	Yes
Document Name	
Comment	
Likes 0	
Dislikes 0	
Response	
Thank you.	
Dave Krueger - SERC Reliability Corporation - 10	
Answer	Yes
Document Name	
Comment	

Likes 0	
Dislikes 0	
Response	
Thank you.	
Alain Mukama - Hydro One Networks, Inc. - 1,3	
Answer	Yes
Document Name	
Comment	
Likes 0	
Dislikes 0	
Response	
Thank you.	
Steven Rueckert - Western Electricity Coordinating Council - 10, Group Name WECC CIP	
Answer	Yes
Document Name	
Comment	
Likes 0	
Dislikes 0	
Response	
Thank you.	
Israel Perez - Salt River Project - 1,3,5,6 - WECC	
Answer	Yes

Document Name	
Comment	
Likes 0	
Dislikes 0	
Response	
Thank you.	
Gail Elliott - International Transmission Company Holdings Corporation - NA - Not Applicable - MRO,RF	
Answer	Yes
Document Name	
Comment	
Likes 0	
Dislikes 0	
Response	
Thank you.	
Matt Lewis - Lower Colorado River Authority - 1,5	
Answer	Yes
Document Name	
Comment	
Likes 0	
Dislikes 0	
Response	

Thank you.	
Teresa Krabe - Lower Colorado River Authority - 1,5	
Answer	Yes
Document Name	
Comment	
Likes 0	
Dislikes 0	
Response	
Thank you.	

2. Provide any additional comments for the SAR drafting team to consider, if desired.	
Kent Feliks - AEP - 3,5,6	
Answer	
Document Name	
Comment	

Regarding SAR Scope #5:There are no recommended changes on the explicit language as written, however it is important for the drafting team to note that outages based on some of these recommended distance criteria would not be simultaneous. It is critical that the the outage scenarios required for study by the standard do not open the requirement up to studying nonsimultaneous outages of multiple stations, as this would create unbounded combined-outage analysis scenarios. In addition, loosely described distance criteria (line-of-sight, ease of access, etc.) may also create unreasonable unbounded analysis scenarios. Any such increase in risk assessment scope must be clearly and unambiguously defined within the standard.

Regarding Cost Impact Assessments: We strongly disagree with and recommend removal of the statement, “The cost impacts for the proposed changes to CIP-014-3 are expected to be minimal.”

For small entities not currently performing analysis to determine local voltage angle instability, rotor angle instability, and frequency instability, given their small footprint's minimal impact on the stability of the Interconnection - these changes will require hiring/training new dynamic analysis expertise or outsourcing their CIP-014 risk assessment to cosultants with this expertise. This will likely have a significant cost impact for these entities.

For large entities performing these types of stability analyses on a subset of applicable stations whose loss pose a critical impact on the operation of the Interconnection, studying all stations for all types of local instability, even those that pose little to no risk to the operation of the Interconnection, will significantly increase the time to perform the risk assessment, and may also require staff augmentation or outside consultants to complete in a timely manner. This will also have a significant cost impact for these entities.

Likes 0	
Dislikes 0	
Response	

The team acknowledges additional clarity is desirable in CIP-014 for entities dealing with physical proximity determinations as well as different ownership of applicable substations. The team will discuss and evaluate how to revise and clarify the risk assessment process to account for physical proximity considerations (line-of-sight, ease of access, etc.) to identify physically adjacent elements for the purpose of evaluating impact from a physical attack as well as different (incl. joint) ownership of identified adjacent Transmission stations/substations. The reviews will be performed in accordance with the SAR and the NERC Report 'Evaluation of the Physical Security Reliability Standard and Physical Security Attacks to the Bulk-Power System' filed in response to a FERC directive. Revisions to the SAR will be made to clarify the scope of instability being evaluated as well as language regarding types of studies. The team agrees that clarification on the cost impact statement in the SAR was needed. Language was revised in the SAR to clarify there may be cost impacts for revisions to the R1 risk assessment as well as potential downstream costs for additionally identified critical sites.	
David Jendras Sr - Ameren - Ameren Services - 1,3,6	
Answer	
Document Name	
Comment	
None.	
Likes 0	
Dislikes 0	
Response	
Thank you.	
Kennedy Meier - Electric Reliability Council of Texas, Inc. - 2	
Answer	
Document Name	
Comment	
ERCOT joins the comments submitted by the IRC SRC and adopts them as its own.	

Likes 0	
Dislikes 0	
Response	
Thank you for your comment. See the response to IRC SRC.	
Marcus Bortman - APS - Arizona Public Service Co. - 1,3,5,6	
Answer	
Document Name	
Comment	
AZPS does not have any additional comments for the SAR to consider at this time.	
Likes 0	
Dislikes 0	
Response	
Thank you.	
Bobbi Welch - Midcontinent ISO, Inc. - 2, Group Name ISO/RTO Council Standards Review Committee 2023-06 CIP-014 Risk Assessment SAR	
Answer	
Document Name	
Comment	
The SRC notes that page 5 of the SAR lists Transmission Owners and Transmission Operators as the functional entities to which the standard should apply. The SRC agrees that these are the appropriate functional entities to which the standard should apply; however, the SRC also recommends that the standard drafting team include representatives from Planning Coordinators (PCs), Reliability Coordinators (RCs) and Transmission Planners (TPs), as these entities often perform verifications of risk assessments, and representatives from these functional entities will therefore be able to provide important perspectives to the drafting team even though the standard does not and should not apply to these functional entities. In the event the standard drafting team does not include representatives from	

one or more of these functional entities, the SRC recommend that the drafting team solicit feedback from these functional entities in the course of developing modifications to the standard.	
Likes 0	
Dislikes 0	
Response	
The team is comprised of members from various functions across the ERO. The team values diversity of opinions and will continue to consider comments from industry throughout the development process.	
Daniel Gacek - Exelon - 1,3	
Answer	
Document Name	
Comment	
In the current Requirement 1, the 24-month study period in-service window limits the planners ability to consider projects that may mitigate the identified risk. The SAR drafting team should consider evaluating the 24-month study period in-service window and consider extending the window to 30-month. With a 30-month window, enties would be able to consider all substation elements expected to be placed into service, or retired, prior to the R1.1 30-month subsequent risk assessment required of entites that have identified one or more substations subject to the standard.	
Likes 0	
Dislikes 0	
Response	
The team will include this consideration when evaluating item 2 from the SAR.	
Pamela Hunter - Southern Company - Southern Company Services, Inc. - 1,3,5,6 - SERC, Group Name Southern Company	
Answer	
Document Name	
Comment	

No additional comments.	
Likes 0	
Dislikes 0	
Response	
Thank you.	
Dwanique Spiller - Berkshire Hathaway - NV Energy - 5	
Answer	
Document Name	
Comment	
None at this time.	
Likes 0	
Dislikes 0	
Response	
Thank you.	
Jodirah Green - ACES Power Marketing - 1,3,4,5,6 - MRO,WECC,Texas RE,SERC,RF, Group Name ACES Collaborators	
Answer	
Document Name	
Comment	
Thank you for the opportunity to comment.	
Likes 0	
Dislikes 0	

Response
Thank you.
Junji Yamaguchi - Hydro-Quebec (HQ) - 1,5
Answer
Document Name
Comment
The following changes from item number one of the Detailed Description should be made: Clarity should be added to the risk assessment to assure that instability is studied and that professional judgment assumptions are based on the investigation of instability. Including the word “fully” leads to increased difficulty in proving to an auditor that the stability studies being performed meet the expected threshold, the word should be removed. By saying “Clarity should be added to the risk assessment to assure that instability is studied,” there is still the expectation to study for instability without the added compliance pressure of being pseudo-zero-defect. As such, the revision should outline technical supporting expectations to clearly identify when an Applicable substation has demonstrated any form of instability. At a minimum, this revision should include specificity regarding the inclusion of transient dynamic studies to evaluate the conditions of the BPS. The word "not" should be removed. Entities should identify the Applicable substations that have demonstrated instability to ease the administrative burden by justifying the basis that any one substation has demonstrated instability through the studies performed versus proving that a station did not have instability. Entities should identify the Applicable substations that have demonstrated instability to ease the administrative burden by justifying the basis that any one substation has demonstrated instability through the studies performed versus proving that a station did not have instability. After reviewing the 5 criteria, the consistency between the risk-based approach established in CIP-002, the Facility is different than the proposed CIP-014 risk criteria. An example is relay clearance times to justify deeper physical security but CIP-002 may rate it as a low impact, but from a CIP-014 perspective it may require higher physical security controls that may not be commensurate with the risk assessed in CIP-002. This may include scenarios that end up requiring significant physical security controls, but not the equivalent level of cybersecurity-related controls; despite being the same station / Facility.

The proposed SAR is a parallel scoping criterion to CIP-002 based more on the function/impact of the system as opposed to rudimentary bright-line criteria. Please consider criteria 1-4 to be incorporated into another standard such as TPL-001, CIP-002, PRC, etc. Criteria 5 is security specific and could be incorporated in CIP-014. Consider that if a physical evaluation requires the CIP-014 table 4.1.1.2 match the CIP-002 bright-line criteria. Recommending an objective-based input. This assessment impacts not only changed scope but impacts downstream considerations which; therefore, will impact cost and may require long implementation timelines which address the risks identified in the risk assessment. We strongly disagree with the Cost Impact Assessment of the SAR's proposed methodology as being minimal. Conducting a large-scale stability study on a system of any reasonable size is very labor-intensive and can take anywhere from 3 to 6 months or more for a team of transmission planners.	
Likes 0	
Dislikes 0	
Response	
The team agrees with removal of the word "fully" from the SAR. The team will also revise the SAR to clarify specific requirement language regarding evaluating instability, uncontrolled separation, and Cascading within an Interconnection (by conducting steady-state and dynamic studies) while allowing for entity-specific flexibility in the development of study methods. The team will consider what physical characteristics may be impactful to how the risk assessment is performed but any physical security controls resulting from critical station are considered out of scope for this project. The team is not changing the scope to modify the applicability section criteria, including common criteria between CIP-002 and CIP-014. The team will include changes to the risk assessment and provide more clarity on others areas (such as physical proximity) to address the objectives of the SAR. The team agrees that clarification on the cost impact statement in the SAR was needed. Language was revised in the SAR to clarify there may be cost impacts for revisions to the R1 risk assessment as well as potential downstream costs for additionally identified critical sites.	
Steven Rueckert - Western Electricity Coordinating Council - 10, Group Name WECC CIP	

Answer	
Document Name	
Comment	
None	
Likes 0	
Dislikes 0	
Response	
Thank you.	
Alain Mukama - Hydro One Networks, Inc. - 1,3	
Answer	
Document Name	
Comment	
None	
Likes 0	
Dislikes 0	
Response	
Thank you.	
John Pearson - ISO New England, Inc. - 2	
Answer	
Document Name	
Comment	
Regarding the cost impact assessment, the SAR states that cost impacts for the proposed changes to CIP-014-3 are expected to be	

minimal. The assessment appears to be based solely on modifications to system studies and does not seem to contemplate the additional spending that would be necessary on any stations newly identified as requiring physical security upgrades as a result of changes to the standard.	
Likes 0	
Dislikes 0	
Response	
The team agrees that clarification on the cost impact statement in the SAR was needed. Language was revised in the SAR to clarify there may be cost impacts for revisions to the R1 risk assessment as well as potential downstream costs for additionally identified critical sites.	
Brad Harris - CenterPoint Energy Houston Electric, LLC - 1 - Texas RE	
Answer	
Document Name	
Comment	
CEHE would like to take this opportunity to support and amplify the statement in the SAR Scope Detailed Description item #1: "This revision should not preclude entities from only conducting an evaluation for long-term studies (e.g., steady-state) or from only conducting dynamic simulations in some instances (e.g., not requiring additional study types once a site is already identified as critical)." CEHE does not want the R1 Risk Assessment requirements to limit flexibility.	
Likes 0	
Dislikes 0	
Response	
The team agrees with removal of the word "fully" from the SAR. The team will also revise the SAR to clarify specific requirement language regarding evaluating instability, uncontrolled separation, and Cascading within an Interconnection (by conducting steady-state and dynamic studies) while allowing for entity-specific flexibility in the development of study methods.	
Chantal Mazza - Hydro-Quebec (HQ) - 1 - NPCC	
Answer	
Document Name	

Comment
The following changes from item number one of the Detailed Description should be made: Clarity should be added to the risk assessment to assure that instability is studied and that professional judgment assumptions are based on the investigation of instability. Including the word “fully” leads to increased difficulty in proving to an auditor that the stability studies being performed meet the expected threshold, the word should be removed. By saying “Clarity should be added to the risk assessment to assure that instability is studied,” there is still the expectation to study for instability without the added compliance pressure of being pseudo-zero-defect. As such, the revision should outline technical supporting expectations to clearly identify when an Applicable substation has demonstrated any form of instability. At a minimum, this revision should include specificity regarding the inclusion of transient dynamic studies to evaluate the conditions of the BPS. The word "not" should be removed. Entities should identify the Applicable substations that have demonstrated instability to ease the administrative burden by justifying the basis that any one substation has demonstrated instability through the studies performed versus proving that a station did not have instability. Entities should identify the Applicable substations that have demonstrated instability to ease the administrative burden by justifying the basis that any one substation has demonstrated instability through the studies performed versus proving that a station did not have instability. After reviewing the 5 criteria, the consistency between the risk-based approach established in CIP-002, the Facility is different than the proposed CIP-014 risk criteria. An example is relay clearance times to justify deeper physical security but CIP-002 may rate it as a low impact, but from a CIP-014 perspective it may require higher physical security controls that may not be commensurate with the risk assessed in CIP-002. This may include scenarios that end up requiring significant physical security controls, but not the equivalent level of cybersecurity-related controls; despite being the same station / Facility. he proposed SAR is a parallel scoping criterion to CIP-002 based more on the function/impact of the system as opposed to rudimentary bright-line criteria. Please consider criteria 1-4 to be incorporated into another standard such as TPL-001, CIP-002, PRC, etc. Criteria 5 is security specific and could be incorporated in CIP-014. Consider that if a physical evaluation requires the CIP-014 table 4.1.1.2 match the CIP-002 bright-line criteria.

Recommending an objective-based input. This assessment impacts not only changed scope but impacts downstream considerations which; therefore, will impact cost and may require long implementation timelines which address the risks identified in the risk assessment. We strongly disagree with the Cost Impact Assessment of the SAR's proposed methodology as being minimal. Conducting a large-scale stability study on a system of any reasonable size is very labor-intensive and can take anywhere from 3 to 6 months or more for a team of transmission planners.	
Likes 0	
Dislikes 0	
Response	
The team agrees with removal of the word "fully" from the SAR. The team will also revise the SAR to clarify specific requirement language regarding evaluating instability, uncontrolled separation, and Cascading within an Interconnection (by conducting steady-state and dynamic studies) while allowing for entity-specific flexibility in the development of study methods. The team will consider what physical characteristics may be impactful to how the risk assessment is performed but any physical security controls resulting from critical station are considered out of scope for this project. Revisions were made to the SAR to clarify not needing to conduct additional risk assessment studies for a site once that site has been identified as critical. The team is not changing the scope to modify the applicability section criteria, including common criteria between CIP-002 and CIP-014. The team will include changes to the risk assessment and provide more clarity on others areas (such as physical proximity) to address the objectives of the SAR. The team agrees that clarification on the cost impact statement in the SAR was needed. Language was revised in the SAR to clarify there may be cost impacts for revisions to the R1 risk assessment as well as potential downstream costs for additionally identified critical sites.	
Michael Johnson - Pacific Gas and Electric Company - 1,3,5 - WECC, Group Name PG&E All Segments	
Answer	
Document Name	

Comment	
PG&E has no other input.	
Likes 0	
Dislikes 0	
Response	
Thank you.	
Lucinda Bradshaw - Oncor Electric Delivery - 1 - Texas RE	
Answer	
Document Name	
Comment	
No Comment	
Likes 0	
Dislikes 0	
Response	
Thank you.	
Dave Krueger - SERC Reliability Corporation - 10	
Answer	
Document Name	
Comment	
Under Project scope in #3, suggest adding "within each Interconnection is consistent" after the word Cascading. Under Detailed Description, suggest adding to #3 after the last sentence ending "application of a study method":	

For example, there should be a consistent method to establish the maximum amount of acceptable generation/load loss within each Interconnection. The methods might include coordination between PA/TP areas, RC areas, or with NERC Interconnection study groups. Entities should not have total flexibility when determining what does or does not affect the Interconnection.	
Likes 0	
Dislikes 0	
Response	
The phrase “within an Interconnection” was added in various parts of the SAR to be consistent with the current CIP-014 language. The team agrees that adequacy and consistency for studies methods is within the scope of the SAR as written and will consider methods of assuring adequate consistency in study parameters and results, such as where multiple different Responsible Entities may own equipment in the same applicable Transmission substation or in multiple Transmission substations in close proximity.	
Jennie Wike - Tacoma Public Utilities (Tacoma, WA) - 1,3,4,5,6 - WECC, Group Name Tacoma Power	
Answer	
Document Name	
Comment	
Tacoma Power recommends that if “line of sight” is used in the revised CIP-014 Standard, then it needs to be clearly defined. For example, substations located within 100 yards of each other.	
Likes 0	
Dislikes 0	
Response	
The team acknowledges additional clarity is desirable in CIP-014 for entities dealing with physical proximity determinations as well as different ownership of applicable substations. The team will discuss and evaluate how to revise and clarify the risk assessment process to account for physical proximity considerations (line-of-sight, ease of access, etc.) to identify physically adjacent elements for the purpose of evaluating impact from a physical attack as well as different (incl. joint) ownership of identified adjacent Transmission stations/substations. The reviews will be performed in accordance with the SAR and the NERC Report ‘Evaluation of the Physical Security Reliability Standard and Physical Security Attacks to the Bulk-Power System’ filed in response to a FERC directive.	

April Ford - Southern Indiana Gas and Electric Co. - 3,5,6 - RF	
Answer	
Document Name	
Comment	
SIGE requests clarity around differing ownership for SAR Scope Detailed Description item #5: "The risk assessment should be revised to provide clear expectations regarding the inclusion of physically adjacent elements for the purpose of evaluating the impact from a physical attack."	
Likes 0	
Dislikes 0	
Response	
The team acknowledges additional clarity is desirable in CIP-014 for entities dealing with physical proximity determinations as well as different ownership of applicable substations. The team will discuss and evaluate how to revise and clarify the risk assessment process to account for physical proximity considerations (line-of-sight, ease of access, etc.) to identify physically adjacent elements for the purpose of evaluating impact from a physical attack as well as different (incl. joint) ownership of identified adjacent Transmission stations/substations. The reviews will be performed in accordance with the SAR and the NERC Report 'Evaluation of the Physical Security Reliability Standard and Physical Security Attacks to the Bulk-Power System' filed in response to a FERC directive.	
Ruida Shu - Northeast Power Coordinating Council - 1,2,3,4,5,6,7,8,9,10 - NPCC, Group Name NPCC RSC	
Answer	
Document Name	
Comment	
The following changes from item number one of the Detailed Description should be made: **Clarity should be added to the risk assessment to assure that instability is studied and that professional judgment assumptions are based on the investigation of instability.** Including the word "fully" leads to increased difficulty in proving to an auditor that the stability studies being performed meet the	

expected threshold, the word should be removed. By saying “Clarity should be added to the risk assessment to assure that instability is studied,” there is still the expectation to study for instability without the added compliance pressure of being pseudo-zero-defect.

As such, the revision should outline technical supporting expectations to clearly identify when an Applicable substation has demonstrated any form of instability. At a minimum, this revision should include specificity regarding the inclusion of transient dynamic studies to evaluate the conditions of the BPS.

The word "not" should be removed. Entities should identify the Applicable substations that *have* demonstrated instability to ease the administrative burden by justifying the basis that any one substation has demonstrated instability through the studies performed versus proving that a station did not have instability.

Entities should identify the Applicable substations that ***have*** demonstrated instability to ease the administrative burden by justifying the basis that any one substation has demonstrated instability through the studies performed versus proving that a station did not have instability.

After reviewing the 5 criteria, the consistency between the risk-based approach established in CIP-002, the Facility is different than the proposed CIP-014 risk criteria. An example is relay clearance times to justify deeper physical security but CIP-002 may rate it as a low impact, but from a CIP-014 perspective it may require higher physical security controls that may not be commensurate with the risk assessed in CIP-002. This may include scenarios that end up requiring significant physical security controls, but not the equivalent level of cybersecurity-related controls; despite being the same station / Facility.

The proposed SAR is a parallel scoping criterion to CIP-002 based more on the function/impact of the system as opposed to rudimentary bright-line criteria. Please consider criteria 1-4 to be incorporated into another standard such as TPL-001, CIP-002, PRC, etc.

Criteria 5 is security specific and could be incorporated in CIP-014.

Consider that if a physical evaluation requires the CIP-014 table 4.1.1.2 match the CIP-002 bright-line criteria.

Recommending an objective-based input.

This assessment impacts not only changed scope but impacts downstream considerations which; therefore, will impact cost and may require long implementation timelines which address the risks identified in the risk assessment.

We strongly disagree with the Cost Impact Assessment of the SAR’s proposed methodology as being minimal. Conducting a large-scale stability study on a system of any reasonable size is very labor-intensive and can take anywhere from 3 to 6 months or more for a team of

transmission planners.	
Likes 0	
Dislikes 0	
Response	
The team agrees with removal of the word “fully” from the SAR. The team will also revise the SAR to clarify specific requirement language regarding evaluating instability, uncontrolled separation, and Cascading within an Interconnection (by conducting steady-state and dynamic studies) while allowing for entity-specific flexibility in the development of study methods. The team will consider what physical characteristics may be impactful to how the risk assessment is performed but any physical security controls resulting from critical station are considered out of scope for this project. Revisions were made to the SAR to clarify not needing to conduct additional risk assessment studies for a site once that site has been identified as critical. The team is not changing the scope to modify the applicability section criteria, including common criteria between CIP-002 and CIP-014. The team will include changes to the risk assessment and provide more clarity on others areas (such as physical proximity) to address the objectives of the SAR. The team agrees that clarification on the cost impact statement in the SAR was needed. Language was revised in the SAR to clarify there may be cost impacts for revisions to the R1 risk assessment as well as potential downstream costs for additionally identified critical sites.	
Joshua London - Eversource Energy - 1,3	
Answer	
Document Name	
Comment	
The following changes from item number one of the Detailed Description should be made: **Clarity should be added to the risk assessment to assure that instability is studied and that professional judgment assumptions are**	

based on investigation of instability.

Including the word “fully” leads to increased difficulty proving to an auditor that the stability studies being performed meet the expected threshold, the word should be removed. By saying “Clarity should be added to the risk assessment to assure that instability is studied,” there is still the expectation to study for instability without the added compliance pressure of being pseudo zero-defect.

As such, the revision should outline technical supporting expectations to clearly identify when an Applicable substation has demonstrated any form of instability. At a minimum, this revision should include specificity regarding the inclusion of transient dynamic studies to evaluate conditions of the BPS.

The word "not" should be removed. Entities should identify the Applicable substations that ***have*** demonstrated instability to ease the administrative burden by justifying the basis that any one substation has demonstrated instability through the studies performed versus proving that a station did not have instability.

Likes 0	
Dislikes 0	

Response

The team agrees with removal of the word “fully” from the SAR. The team will also revise the SAR to clarify specific requirement language regarding evaluating instability, uncontrolled separation, and Cascading within an Interconnection (by conducting steady-state and dynamic studies) while allowing for entity-specific flexibility in the development of study methods.

Revisions were made to the SAR to clarify not needing to conduct additional risk assessment studies for a site once that site has been identified as critical.

Donna Wood - Tri-State G and T Association, Inc. - 1,3,5

Answer	
Document Name	

Comment

NA

Likes 0	

Dislikes 0	
Response	
Thank you.	
Mark Garza - FirstEnergy - FirstEnergy Corporation - 1,3,4,5,6, Group Name FE Voter	
Answer	
Document Name	
Comment	
See our response to Question 1.	
Likes 0	
Dislikes 0	
Response	
Thank you.	

End of Report

NERC
NORTH AMERICAN ELECTRIC RELIABILITY CORPORATION

Standard Authorization Request (SAR)

Complete and submit this form, with attachment(s) to the NERC Help Desk. Upon entering the Captcha, please type in your contact information, and attach the SAR to your ticket. Once submitted, you will receive a confirmation number which you can use to track your request.

The North American Electric Reliability Corporation (NERC) welcomes suggestions to improve the reliability of the bulk power system through improved Reliability Standards.

Requested information			
SAR Title:	CIP-014-3 Risk Assessment Refinement		
Date Submitted:	05/18/23 (Revised 12/15/2023)		
SAR Requester			
Name:	Jamie Calderon, NERC J.P. Skeath, NERC (Revised by the 2023-06 Drafting Team)		
Organization:	NERC		
Telephone:	Jamie – 404-406-9647 J.P – 404-446-9630	Email:	Jamie – Jamie.Calderon@nerc.net J.P. – John.Skeath@nerc.net
SAR Type (Check as many as apply)			
☐ New Standard ☒ Revision to Existing Standard ☐ Add, Modify or Retire a Glossary Term ☐ Withdraw/retire an Existing Standard		☐ Imminent Action/ Confidential Issue (SPM Section 10) ☐ Variance development or revision ☐ Other (Please specify)	
Justification for this proposed standard development project (Check all that apply to help NERC prioritize development)			
☒ Regulatory Initiation ☐ Emerging Risk (Reliability Issues Steering Committee) Identified ☐ Reliability Standard Development Plan		☐ NERC Standing Committee Identified ☐ Enhanced Periodic Review Initiated ☐ Industry Stakeholder Identified	
Industry Need (What Bulk Electric System (BES) reliability benefit does the proposed project provide?):			
In the NERC report[1] filed in response to a FERC directive[2], NERC staff identified continuing inconsistency in registered entity CIP-014-3 risk assessments to most appropriately identify critical infrastructure. The Commission directed NERC to evaluate whether the physical security protection requirements in NERC's Reliability Standards are adequate to address the risks associated with physical attacks on Bulk Electric System (BES) Facilities, including the adequacy of the required risk assessment in CIP-014-3 Requirement R1. In the report, NERC found that CIP-014-3 required revision to assure adequate and			

[1] https://www.nerc.com/FilingsOrders/us/NERC%20Filings%20to%20FERC%20DL/NERC%20Report%20on%20CIP-014-3.pdf; April 14, 2023

[2] Due to an increase in reports of physical attacks on electric substations, the Federal Energy Regulatory Commission issued the December 2022 Order in Docket No. RD23-2-000 directing NERC to evaluate the effectiveness of the Physical Security Reliability Standard CIP-014-3 in mitigating the risks to the Bulk-Power System ("BPS") associated with physical attacks.

Requested information
consistent approach in evaluating instability as well as the identification of infrastructure critical to the operation of the BPS. As detailed in the report, NERC found that the CIP-014-3 risk assessment should be refined to ensure that entities conduct effective risk assessments of their applicable substations. The report indicates that while the overall objective of the risk assessment is sound, there are inconsistent approaches to performing the risk assessment. The requirement language within CIP-014-3 does not prescribe a specific method for how each risk assessment shall be performed. As such, specific components that comprise any supporting analytics are neither defined nor listed. As written, CIP-014-3 provides intentional flexibility for various approaches to the risk assessment due to expected differences in each registered entity's facts and circumstances. [3] However, NERC finds that flexibility does not alter the intent of CIP-014-3's that each risk assessment must be "designed to identify" which applicable Transmission station(s) and Transmission substation(s), that if rendered inoperable or damaged, could result in instability, uncontrolled separation, or Cascading within an Interconnection. Registered entities may implement different approaches to complete this objective, but the approach must be able to accomplish the fundamental obligation of the requirement through effectively assessing all required adverse system conditions with sufficient supporting technical analyses. Further, the ERO Enterprise has observed that, in certain instances, registered entities failed to provide sufficient technical studies or justification for study decisions; resulting in risk assessments that did not demonstrate effective evaluations for instability, uncontrolled separation, or Cascading within an Interconnection. In other instances, registered entities argued against adequately studying for instability for all applicable sites in the risk assessment while citing the language of CIP-014-3 Requirement R1 and the lack of specificity regarding dynamic studies. NERC determined that inconsistent approaches in performing risk assessments is largely due to a lack of specificity in the requirement language as to the nature and parameters of the risk assessment.
Purpose or Goal (How does this proposed project provide the reliability-related benefit described above?):
As the intent of CIP-014-3 is to identify and physically protect those Transmission stations, Transmission substations, and their associated primary control centers that are critical to the reliable and secure operation of the BPS, registered entity approaches for the risk assessment must be reasonably consistent and substantiated with sufficient technically based rationale. As highlighted in the report, there continues to be confusion within industry as to how to adequately evaluate instability. Therefore, this SAR proposes refinement of the risk assessment to assure critical sites are identified and physically protected. The goal of this SAR is for the drafting team to modify risk assessment requirement(s) within CIP-014-3 to provide specificity regarding acceptable approaches to the risk assessment including appropriateness

[3] NERC has provided guidance to Compliance Monitoring and Enforcement staff to aid in review of entity risk assessment methods due to the inherent flexibility. Available here: https://www.nerc.com/pa/comp/guidance/CMEPPracticeGuidesDL/CMEP%20Practice%20Guide%20CIP-014-3%20R1.pdf.

Requested information
of models, study types, study parameters, documentation of criteria, and documentation of supporting technical rationale. These proposed revisions to CIP-014-3 will assure an adequate and consistent approach in evaluating instability and the identification of critical Transmission stations, Transmission substations, and their associated primary control centers.
Project Scope (Define the parameters of the proposed project):
The DT should revise CIP-014-3 R1 to: 1. Clarify the risk assessment methods for studying instability, uncontrolled separation, and Cascading within an Interconnection. The methods should account for dynamic studies. 2. Clarify the case(s) used for the risk assessment to be tailored to the Requirement R1 in-service window and correct any discrepancies between the study period, frequency of study, and the base case(s) a Transmission Owner uses. 3. Assure the adequacy and consistent implementation of technically supported justification for study decisions. Clarity should include specificity regarding the documentation, and usage of criteria to identify instability, uncontrolled separation, or Cascading within an Interconnection occur as part of a risk assessment. 4. Clarify what study scenario(s) and other study assumptions are appropriate and reasonable considering the intent of CIP-014-3 and the potential range of issues during a physical attack. Simulations should incorporate the loss of station elements without the reliance on local system protection. 5. Clarify how to account for adjacent Transmission stations or Transmission substations of differing ownership as well as for those Transmission stations or Transmission substations within line-of-sight to each other.
Detailed Description (Describe the proposed deliverable(s) with sufficient detail for a drafting team to execute the project. If you propose a new or substantially revised Reliability Standard or definition, provide: (1) a technical justification[4] which includes a discussion of the reliability-related benefits of developing a new or revised Reliability Standard or definition, and (2) a technical foundation document (*e.g.,* research paper) to guide development of the Standard or definition):
Each item from the above proposed scope is substantiated further in the NERC report.[5] The main details for each are outlined as follows: 1. **Clarity should be added to the risk assessment to assure that instability, uncontrolled separation, and Cascading within an Interconnection are studied, as appropriate to the purpose of CIP-014. The risk assessments should be based on best utility practices. As such, the revision should outline technical supporting expectations to clearly identify when an applicable substation has not demonstrated instability, uncontrolled separation, or Cascading within an Interconnection. At a minimum, this revision should include specificity regarding the inclusion of dynamic studies to evaluate instability, uncontrolled separation, and Cascading**

[4] The NERC Rules of Procedure require a technical justification for new or substantially revised Reliability Standards. Please attach pertinent information to this form before submittal to NERC.

[5] https://www.nerc.com/FilingsOrders/us/NERC%20Filings%20to%20FERC%20DL/NERC%20Report%20on%20CIP-014-3.pdf

Requested information

within an Interconnection. To ensure that a station is effectively identified as non-critical, registered entities need to have performed both steady-state and dynamic studies. However, revisions should also include that once a transmission station or transmission substation is identified as critical, additional analysis does not need to be performed for that site.

Power system stability is generally discussed as a singular concept but can be analyzed through multiple paradigms. Thus, stability can be broken down into distinct sub-categories on time frame (short-term and long-term) and types (frequency, rotor angle, and voltage stability).

2. **Revisions to the risk assessment should be made to only include transmission and generation projects that are appropriate to the periodicity of the entity's risk assessments**. **Determinations of appropriateness should be clarified to align study periods, frequency of studies, and the power flow models used.**

   For instance, an entity that had previously identified a CIP-014 critical site and the periodicity of the risk assessment is at least once every 30 months (per the current Standard), it might not be appropriate from a technical standpoint to include projects that will not be in service by the time the next risk assessment is scheduled to be performed. If this entity includes projects like new generation or new transmission lines that are not projected to be in service by the time of the next risk assessment, the risk assessment results may obscure how the system would electrically respond during the time period of the risk assessment.

3. **Assure the development and documentation of technically supported justification for study decisions to provide greater assurance of risk assessment adequacy and consistency. Risk Assessments must consist of a documented transmission analysis or transmission analyses designed to identify the Transmission station(s) and Transmission substation(s) that if rendered inoperable or damaged could result in instability, uncontrolled separation, or Cascading within an Interconnection.**

   There is currently no requirement to include documentation of criteria, parameters, and study decisions or assumptions made that would demonstrate the consistent application of a study methodology.

4. **Clarify what study scenario(s) and other study assumptions (such as use of delayed clearing) are appropriate and reasonable considering the intent of CIP-014-3 and the potential range of issues during a physical attack. Clarify the how the terms "inoperable" and "damaged" should be reflected in the risk assessment.**

   There is no specific threat or physical attack identified in the Standard to be evaluated against. Nor is there a timeline for such a physical event provided to be studied against, such as within dynamic studies. NERC has verified during multiple oversight activities that registered entities often do not study a more severe failure which introduces risk from attacks intentionally conducted during stressed periods. Many registered entities have found that the term "inoperable" includes the total loss of communication and protection equipment at the substation, necessitating delayed clearance from far-end relaying to isolate the event's impacts. However, the assumption of loss of local protection equipment is not consistently implemented.

Requested information
5. **Provide clear expectations regarding the inclusion of physically adjacent elements for the purpose of evaluating the impact from a physical attack.** The CIP-014-3 risk assessment differs from other transmission planning studies in that the registered entity must consider physical proximity regardless of electrical connection, as the risk assessment requires the entire transmission station to be considered as rendered inoperable or damaged as the result of physical attack rather than just particular elements electrically connected to a single electrical disturbance. There is no clarity on the scope of what physically adjacent elements shall be considered within the risk assessment. Some items that are commonly considered to outline this problem: line-of-sight between different substation yards for a single studied site, ease of access from a common public roadway that exists between all of the substation yards, if substation yards are in close enough proximity that a single event can impact both substations (e.g., the debris field from an incendiary device set off at one yard will impact the other yard), etc.
Cost Impact Assessment, if known (Provide a paragraph describing the potential cost impacts associated with the proposed project):
The cost impacts for the proposed changes to the CIP-014-3 risk assessment are expected to be minimal relevant to current CIP-014 risk assessment costs. The changes add clarity to the current Standard to bring consistency and clarify expectations for effectively evaluating for instability, uncontrolled separation, and Cascading within an Interconnection following a physical attack. The identification of additional transmission stations and transmission substations as critical to the Interconnection may result from revisions to R1, which may necessitate additional physical security measures.
Please describe any unique characteristics of the BES facilities that may be impacted by this proposed standard development project (*e.g.*, Dispersed Generation Resources):
None.
To assist the NERC Standards Committee in appointing a drafting team with the appropriate members, please indicate to which Functional Entities the proposed standard(s) should apply (*e.g.*, Transmission Operator, Reliability Coordinator, etc. See the most recent version of the NERC Functional Model for definitions):
Transmission Owners, Transmission Operators
Do you know of any consensus building activities[6] in connection with this SAR? If so, please provide any recommendations or findings resulting from the consensus building activity.
None.
Are there any related standards or SARs that should be assessed for impact as a result of this proposed project? If so, which standard(s) or project number(s)?
Project 2021-03 SAR – Modifications to CIP-002 and CIP-014. Project 2021-03 is reviewing the applicability of Facilities identified by the RC as critical to the derivation of IROLs in CIP-014.
Are there alternatives (e.g., guidelines, white paper, alerts, etc.) that have been considered or could meet the objectives? If so, please list the alternatives.

[6] Consensus building activities are occasionally conducted by NERC and/or project review teams. They typically are conducted to obtain industry inputs prior to proposing any standard development project to revise, or develop a standard or definition.

Requested information
None.

Reliability Principles	
Does this proposed standard development project support at least one of the following Reliability Principles (Reliability Interface Principles)? Please check all those that apply.	
☒	1. Interconnected bulk power systems shall be planned and operated in a coordinated manner to perform reliably under normal and abnormal conditions as defined in the NERC Standards.
☐	2. The frequency and voltage of interconnected bulk power systems shall be controlled within defined limits through the balancing of real and reactive power supply and demand.
☐	3. Information necessary for the planning and operation of interconnected bulk power systems shall be made available to those entities responsible for planning and operating the systems reliably.
☐	4. Plans for emergency operation and system restoration of interconnected bulk power systems shall be developed, coordinated, maintained and implemented.
☐	5. Facilities for communication, monitoring and control shall be provided, used and maintained for the reliability of interconnected bulk power systems.
☐	6. Personnel responsible for planning and operating interconnected bulk power systems shall be trained, qualified, and have the responsibility and authority to implement actions.
☒	7. The security of the interconnected bulk power systems shall be assessed, monitored and maintained on a wide area basis.
☒	8. Bulk power systems shall be protected from malicious physical or cyber attacks.

Market Interface Principles	
Does the proposed standard development project comply with all of the following Market Interface Principles?	Enter (yes/no)
1. A reliability standard shall not give any market participant an unfair competitive advantage.	Yes
2. A reliability standard shall neither mandate nor prohibit any specific market structure.	Yes
3. A reliability standard shall not preclude market solutions to achieving compliance with that standard.	Yes
4. A reliability standard shall not require the public disclosure of commercially sensitive information. All market participants shall have equal opportunity to access commercially non-sensitive information that is required for compliance with reliability standards.	Yes

Identified Existing or Potential Regional or Interconnection Variances	
Region(s)/ Interconnection	Explanation
n/a	n/a

For Use by NERC Only

SAR Status Tracking (Check off as appropriate).	
☐ Draft SAR reviewed by NERC Staff ☐ Draft SAR presented to SC for acceptance ☐ DRAFT SAR approved for posting by the SC	☐ Final SAR endorsed by the SC ☐ SAR assigned a Standards Project by NERC ☐ SAR denied or proposed as Guidance document

Version History

Version	Date	Owner	Change Tracking
1	June 3, 2013		Revised
1	August 29, 2014	Standards Information Staff	Updated template
2	January 18, 2017	Standards Information Staff	Revised
2	June 28, 2017	Standards Information Staff	Updated template
3	February 22, 2019	Standards Information Staff	Added instructions to submit via Help Desk
4	February 25, 2020	Standards Information Staff	Updated template footer

NERC
NORTH AMERICAN ELECTRIC RELIABILITY CORPORATION

Standard Authorization Request (SAR)

Complete and submit this form, with attachment(s) to the NERC Help Desk. Upon entering the Captcha, please type in your contact information, and attach the SAR to your ticket. Once submitted, you will receive a confirmation number which you can use to track your request.

The North American Electric Reliability Corporation (NERC) welcomes suggestions to ~~improve~~ the reliability of the bulk power system through improved Reliability Standards.

Requested information			
SAR Title:	CIP-014-3 Risk Assessment Refinement		
Date Submitted:	05/18/23 (Revised 12/15/2023)		
SAR Requester			
Name:	Jamie Calderon, NERC J.P. Skeath, NERC (Revised by the 2023-06 Drafting Team)		
Organization:	NERC		
Telephone:	Jamie – 404-406-9647 J.P – 404-446-9630	Email:	Jamie – Jamie.Calderon@nerc.net J.P. – John.Skeath@nerc.net
SAR Type (Check as many as apply)			
☐ New Standard ☒ Revision to Existing Standard ☐ Add, Modify or Retire a Glossary Term ☐ Withdraw/retire an Existing Standard		☐ Imminent Action/ Confidential Issue (SPM Section 10) ☐ Variance development or revision ☐ Other (Please specify)	
Justification for this proposed standard development project (Check all that apply to help NERC prioritize development)			
☒ Regulatory Initiation ☐ Emerging Risk (Reliability Issues Steering Committee) Identified ☐ Reliability Standard Development Plan		☐ NERC Standing Committee Identified ☐ Enhanced Periodic Review Initiated ☐ Industry Stakeholder Identified	
Industry Need (What Bulk Electric System (BES) reliability benefit does the proposed project provide?):			
In the NERC report[1] filed in response to a FERC directive[2], NERC staff identified continuing inconsistency in registered entity CIP-014-3 risk assessments to most appropriately identify critical infrastructure. The Commission directed NERC to evaluate whether the physical security protection requirements in NERC's Reliability Standards are adequate to address the risks associated with physical attacks on Bulk ~~Power~~Electric System (~~BPS~~BES) Facilities, including the adequacy of the required risk assessment in CIP-014-3 Requirement R1. In the report, NERC found that CIP-014-3 required revision to assure adequate			

[1] https://www.nerc.com/FilingsOrders/us/NERC%20Filings%20to%20FERC%20DL/NERC%20Report%20on%20CIP-014-3.pdf; April 14, 2023
[2] Due to an increase in reports of physical attacks on electric substations, the Federal Energy Regulatory Commission issued the December 2022 Order in Docket No. RD23-2-000 directing NERC to evaluate the effectiveness of the Physical Security Reliability Standard CIP-014-3 in mitigating the risks to the Bulk-Power System ("BPS") associated with physical attacks.

Requested information
and consistent approach in evaluating instability as well as the identification of infrastructure critical to the operation of the BPS. As detailed in the report, NERC found that the CIP-014-3 risk assessment should be refined to ensure that entities conduct effective risk assessments of their applicable substations. The report indicates that while the overall objective of the risk assessment is sound, there are inconsistent approaches to performing the risk assessment. The requirement language within CIP-014-3 does not prescribe a specific method for how each risk assessment shall be performed. As such, specific components that comprise any supporting analytics are neither defined nor listed. As written, CIP-014-3 provides intentional flexibility for various approaches to the risk assessment due to expected differences in each registered entity's facts and circumstances. [3] However, NERC finds that flexibility does not alter the intent of CIP-014-3's that each risk assessment must be "designed to identify" which applicable Transmission station(s) and Transmission substation(s), that if rendered inoperable or damaged, could result in instability, uncontrolled separation, or Cascading within an Interconnection. Registered entities may implement different approaches to complete this objective, but the approach must be able to accomplish the fundamental obligation of the requirement through effectively assessing all required adverse system conditions with sufficient supporting technical analyses. Further, the ERO Enterprise has observed that, in certain instances, registered entities failed to provide sufficient technical studies or justification for study decisions; resulting in risk assessments that did not demonstrate effective evaluations for instability, uncontrolled separation, or Cascading~~.~~ within an Interconnection. In other instances, registered entities argued against adequately studying for instability for all applicable sites in the risk assessment while citing the language of CIP-014-3 Requirement R1 and the lack of specificity regarding dynamic studies. NERC determined that inconsistent approaches in performing risk assessments is largely due to a lack of specificity in the requirement language as to the nature and parameters of the risk assessment.
Purpose or Goal (How does this proposed project provide the reliability-related benefit described above?):
As the intent of CIP-014-3 is to identify and physically protect those Transmission stations, Transmission substations, and their associated primary control centers that are critical to the reliable and secure operation of the BPS, registered entity approaches for the risk assessment must be reasonably consistent and substantiated with sufficient technically based rationale. As highlighted in the report, there continues to be confusion within industry as to how to adequately evaluate instability. Therefore, this SAR proposes refinement of the risk assessment to assure critical sites are identified and physically protected. The goal of this SAR is for the drafting team to modify risk assessment requirement(s) within CIP-014-3 to provide specificity regarding acceptable approaches to the risk assessment including appropriateness

[3] NERC has provided guidance to Compliance Monitoring and Enforcement staff to aid in review of entity risk assessment methods due to the inherent flexibility. Available here: https://www.nerc.com/pa/comp/guidance/CMEPPracticeGuidesDL/CMEP%20Practice%20Guide%20CIP-014-3%20R1.pdf.

Requested information
of models, study types, study parameters, documentation of criteria, and documentation of supporting technical rationale. These proposed revisions to CIP-014-3 will assure an adequate and consistent approach in evaluating instability and the identification of critical Transmission stations, Transmission substations, and their associated primary control centers.
Project Scope (Define the parameters of the proposed project):
The ~~SDT~~DT should revise CIP-014-3~~'s~~ R1 to: 1. Clarify the risk assessment methods for studying instability, uncontrolled separation, and Cascading~~.~~ within an Interconnection. The methods should account for dynamic studies ~~evaluating the possibility of transient instability~~. 2. ~~Revise the risk assessment and clarify~~Clarify the case(s) used for the risk assessment to be tailored to the Requirement R1 in-service window and correct any discrepancies between the study period, frequency of study, and the base case(s) a Transmission Owner uses. 3. ~~Revise the risk assessment to assure~~Assure the adequacy and consistent implementation of technically ~~supportive rationales,~~supported justification~~, and~~ for study decisions. Clarity should include specificity regarding the documentation, ~~posting,~~ and usage of criteria to identify instability, uncontrolled separation, or Cascading within an Interconnection occur as part of a risk assessment. 4. ~~Revise the risk assessment to clarify~~Clarify what study scenario(s) and other study assumptions are appropriate and reasonable considering the intent of CIP-014-3 and the potential range of issues during a physical attack. Simulations should incorporate the ~~complete~~ loss of ~~all~~ station elements without the reliance on local system protection. 5. ~~Revise the risk assessment and clarify~~Clarify how to account for adjacent Transmission stations or Transmission substations of differing ownership as well as for those Transmission stations or Transmission substations within line-of-sight to each other.
Detailed Description (Describe the proposed deliverable(s) with sufficient detail for a drafting team to execute the project. If you propose a new or substantially revised Reliability Standard or definition, provide: (1) a technical justification[4] which includes a discussion of the reliability-related benefits of developing a new or revised Reliability Standard or definition, and (2) a technical foundation document (*e.g.,* research paper) to guide development of the Standard or definition):
Each item from the above proposed scope is substantiated further in the NERC report.[5] The main details for each are outlined as follows: 1. **Clarity should be added to the risk assessment to assure that instability ~~is fully studied and that professional judgment assumptions are based on investigation of instability. This revision should not preclude entities from only conducting an evaluation for long-term studies (e.g., steady-state) or from only conducting dynamic simulations in some instances (e.g., not requiring additional study types once a site is already identified as critical).~~, uncontrolled**

[4] The NERC Rules of Procedure require a technical justification for new or substantially revised Reliability Standards. Please attach pertinent information to this form before submittal to NERC.

[5] https://www.nerc.com/FilingsOrders/us/NERC%20Filings%20to%20FERC%20DL/NERC%20Report%20on%20CIP-014-3.pdf

Requested information
separation, and Cascading within an Interconnection are studied, as appropriate to the purpose of CIP-014. The risk assessments should be based on best utility practices. As such, the revision should outline technical supporting expectations to clearly identify when an ~~Applicable~~applicable substation has not demonstrated ~~any form of~~ instability~~.~~, uncontrolled separation, or Cascading within an Interconnection. At a minimum, this revision should include specificity regarding the inclusion of ~~transient~~ dynamic studies to evaluate ~~conditions of the BPS.~~ instability, uncontrolled separation, and Cascading within an Interconnection. To ensure that a station is effectively identified as non-critical, registered entities need to have performed both steady-state and dynamic studies. However, revisions should also include that once a transmission station or transmission substation is identified as critical, additional analysis does not need to be performed for that site. Power system stability is generally discussed as a singular concept but can be analyzed through multiple paradigms. Thus, stability can be broken down into distinct sub~~-~~categories on time frame (~~e.g.,~~ short-term ~~vs.~~and long-term) ~~or~~and types (~~e.g.,~~ frequency~~ or~~, rotor angle~~). To ensure that no instability occurs in simulation, registered entities can cover each broad type of~~, and voltage stability ~~analysis via Contingency analysis, governor power flow analysis, and transient stability analysis.~~). 2. **Revisions to the risk assessment should be made to only include transmission and generation projects that are appropriate to the periodicity of the entity's risk ~~assessment studies.~~assessments. Determinations of appropriateness should be clarified ~~and consider~~to align study periods, frequency of studies, and the power flow models used.** For instance, an entity that had previously identified a CIP-014 critical site and the periodicity of the risk assessment is at least once every 30 months (per the current Standard), it ~~would~~might not be appropriate from a technical standpoint to include projects that will not be in service by the time the next risk assessment is scheduled to be performed. If this entity includes projects like new generation or new transmission lines that are not projected to be in service by the time of the next risk assessment, the risk assessment results may obscure how the system would electrically respond during the time period of the risk assessment. ~~3. Revisions to the risk assessment should be made to assure~~Assure **the development and documentation of technically ~~supportive rationales,~~supported justification~~, and~~ for study decisions to provide greater assurance of risk assessment adequacy and consistency. ~~Criteria should include defining "inoperable" or "damaged" substations such that the intent of the risk assessment is clear.~~** 3. ~~The risk assessment~~Risk Assessments **must consist of a documented transmission analysis or transmission analyses designed to identify the Transmission station(s) and Transmission substation(s) that if ~~completely lost,~~ rendered inoperable or damaged could result in instability, uncontrolled separation, or Cascading within an Interconnection. ~~However, there.~~** There is currently no requirement to include documentation of criteria, parameters, and study decisions or assumptions made that would demonstrate the consistent application of a study ~~method~~methodology.

Requested information
4. ~~The risk assessment should be revised to clarify~~Clarify **what study scenario(s) and other study assumptions (such as use of delayed clearing) are appropriate and reasonable considering the intent of CIP-014-3 and the potential range of issues during a physical attack.** Clarify the how the terms "inoperable" and "damaged" should be reflected in the risk assessment. There is no specific threat or physical attack identified in the Standard to be evaluated against. Nor is there a timeline for such a physical event provided to be studied against, such as within dynamic studies. NERC has verified during multiple oversight activities that registered entities often do not study a more severe failure which introduces risk from attacks intentionally conducted during stressed periods. Many registered entities have found that the term "inoperable" includes the total loss of communication and protection equipment at the substation, necessitating delayed clearance from far-end relaying to isolate the event's impacts. However, the assumption of loss of local protection equipment is not consistently implemented. 5. ~~The risk assessment should be revised to provide~~Provide **clear expectations regarding the inclusion of physically adjacent elements for the purpose of evaluating the impact from a physical attack.** The CIP-014-3 risk assessment differs from other transmission planning studies in that the registered entity must consider physical proximity regardless of electrical connection, as the risk assessment requires the entire transmission station to be considered as rendered inoperable or damaged as the result of physical attack rather than just particular elements electrically connected to a single electrical disturbance. There is no clarity on the scope of what physically adjacent elements shall be considered within the risk assessment. Some items that are commonly considered to outline this problem: line-of-sight between different substation yards for a single studied site, ease of access from a common public roadway that exists between all of the substation yards, if substation yards are in close enough proximity that a single event can impact both substations (e.g., the debris field from an incendiary device set off at one yard will impact the other yard), etc.
Cost Impact Assessment, if known (Provide a paragraph describing the potential cost impacts associated with the proposed project):
The cost impacts for the proposed changes to the CIP-014-3 risk assessment are expected to be minimal relevant to current CIP-014 risk assessment costs. The changes add clarity to the current Standard to bring consistency and clarify expectations for effectively evaluating for instability, uncontrolled separation, and Cascading within an Interconnection following a physical attack~~.~~. The ~~upper limit~~identification of ~~cost added to entities is bounded due to no alteration of applicable~~additional transmission stations and transmission substations ~~potentially receiving security control upgrades. Rather,~~ as critical to the ~~cost incurred will be on the additions of study rigor~~Interconnection may result from revisions to R1, which ~~again are anticipated to be relatively minimal.~~may necessitate additional physical security measures.
Please describe any unique characteristics of the BES facilities that may be impacted by this proposed standard development project (*e.g.*, Dispersed Generation Resources):
None.

Requested information
To assist the NERC Standards Committee in appointing a drafting team with the appropriate members, please indicate to which Functional Entities the proposed standard(s) should apply (*e.g.*, Transmission Operator, Reliability Coordinator, etc. See the most recent version of the NERC Functional Model for definitions):
Transmission Owners, Transmission Operators
Do you know of any consensus building activities[6] in connection with this SAR? If so, please provide any recommendations or findings resulting from the consensus building activity.
None.
Are there any related standards or SARs that should be assessed for impact as a result of this proposed project? If so, which standard(s) or project number(s)?
Project 2021-03 SAR – Modifications to CIP-002 and CIP-014. Project 2021-03 is reviewing the applicability of Facilities identified by the RC as critical to the derivation of IROLs in CIP-014.
Are there alternatives (e.g., guidelines, white paper, alerts, etc.) that have been considered or could meet the objectives? If so, please list the alternatives.
None.

Reliability Principles	
Does this proposed standard development project support at least one of the following Reliability Principles (Reliability Interface Principles)? Please check all those that apply.	
☒	1. Interconnected bulk power systems shall be planned and operated in a coordinated manner to perform reliably under normal and abnormal conditions as defined in the NERC Standards.
☐	2. The frequency and voltage of interconnected bulk power systems shall be controlled within defined limits through the balancing of real and reactive power supply and demand.
☐	3. Information necessary for the planning and operation of interconnected bulk power systems shall be made available to those entities responsible for planning and operating the systems reliably.
☐	4. Plans for emergency operation and system restoration of interconnected bulk power systems shall be developed, coordinated, maintained and implemented.
☐	5. Facilities for communication, monitoring and control shall be provided, used and maintained for the reliability of interconnected bulk power systems.
☐	6. Personnel responsible for planning and operating interconnected bulk power systems shall be trained, qualified, and have the responsibility and authority to implement actions.
☒	7. The security of the interconnected bulk power systems shall be assessed, monitored and maintained on a wide area basis.
☒	8. Bulk power systems shall be protected from malicious physical or cyber attacks.

[6] Consensus building activities are occasionally conducted by NERC and/or project review teams. They typically are conducted to obtain industry inputs prior to proposing any standard development project to revise, or develop a standard or definition.

Market Interface Principles	
Does the proposed standard development project comply with all of the following Market Interface Principles?	Enter (yes/no)
1. A reliability standard shall not give any market participant an unfair competitive advantage.	Yes
2. A reliability standard shall neither mandate nor prohibit any specific market structure.	Yes
3. A reliability standard shall not preclude market solutions to achieving compliance with that standard.	Yes
4. A reliability standard shall not require the public disclosure of commercially sensitive information. All market participants shall have equal opportunity to access commercially non-sensitive information that is required for compliance with reliability standards.	Yes

Identified Existing or Potential Regional or Interconnection Variances	
Region(s)/ Interconnection	Explanation
n/a	n/a

For Use by NERC Only

SAR Status Tracking (Check off as appropriate).	
☐ Draft SAR reviewed by NERC Staff ☐ Draft SAR presented to SC for acceptance ☐ DRAFT SAR approved for posting by the SC	☐ Final SAR endorsed by the SC ☐ SAR assigned a Standards Project by NERC ☐ SAR denied or proposed as Guidance document

Version History

Version	Date	Owner	Change Tracking
1	June 3, 2013		Revised
1	August 29, 2014	Standards Information Staff	Updated template
2	January 18, 2017	Standards Information Staff	Revised
2	June 28, 2017	Standards Information Staff	Updated template
3	February 22, 2019	Standards Information Staff	Added instructions to submit via Help Desk
4	February 25, 2020	Standards Information Staff	Updated template footer

Standard Development Timeline

This section is maintained by the drafting team during the development of the standard and will be removed when the standard is adopted by the NERC Board of Trustees (Board).

Description of Current Draft

CIP-014-4 is posted for a 45-day formal comment period with initial ballot.

Completed Actions	Date
Standards Committee approved Standard Authorization Request (SAR) for posting	June 21, 2023
SAR posted for comment	July 26, 2023 – August 24, 2023
Accepted Revised SAR	January 17, 2024

Anticipated Actions	Date
45-day formal or informal comment period with ballot	May 20, 2024 – July 3, 2024
45-day formal or informal comment period with additional ballot	August 2, 2024 – September 16, 2024
10-day final ballot	October 14, 2024 – October 23, 2024
Board adoption	December 12, 2024

New or Modified Term(s) Used in NERC Reliability Standards

This section includes all new or modified terms used in the proposed standard that will be included in the *Glossary of Terms Used in NERC Reliability Standards* upon applicable regulatory approval. Terms used in the proposed standard that are already defined and are not being modified can be found in the *Glossary of Terms Used in NERC Reliability Standards*. The new or revised terms listed below will be presented for approval with the proposed standard. Upon Board adoption, this section will be removed.

Term(s):

None.

A. Introduction

1. **Title:** Physical Security

2. **Number:** CIP-014-4

3. **Purpose:** To identify and protect Transmission stations and Transmission substations, and their associated primary control centers, that if rendered inoperable or damaged as a result of a physical attack could result in instability, uncontrolled separation, or Cascading within an Interconnection.

4. **Applicability:**

   4.1. Functional Entities:

   4.1.1. Transmission Owner.

   4.1.2. Transmission Operator.

   Exemption: Facilities in a "protected area," as defined in 10 C.F.R. § 73.2, within the scope of a security plan approved or accepted by the Nuclear Regulatory Commission are not subject to this Standard; or Facilities within the scope of a security plan approved or accepted by the Canadian Nuclear Safety Commission are not subject to this Reliability Standard.

5. **Effective Date:** See Implementation Plan for CIP-014-4.

B. Requirements and Measures

R1. Each Transmission Owner shall establish and maintain a list of applicable Transmission station(s) and Transmission substation(s) for performing risk assessments in accordance with the criteria in Attachment 1. Each Transmission Owner shall: *[Violation Risk Factor: High; Time-Horizon: Long-term Planning]*

1.1. Consider all Transmission station(s) and Transmission substation(s) that are existing or planned to be in service within 36 months; and

1.2. Review the list every 36 months and update the list, if necessary.

1.3. If the Transmission Owner identifies no applicable Transmission station(s) and Transmission substation(s), then no additional actions are required to fulfill the remainder of the standard.

M1. Examples of evidence may include, but are not limited to, dated written or electronic documentation of the Transmission stations and Transmission substations (existing or planned to be in service within 36 months) that meet the criteria in Attachment 1 as specified in Requirement R1.

R2. Each Transmission Owner shall establish and implement documented criteria for identifying Transmission station(s) and Transmission substation(s) in proximity to those identified in Requirement R1, irrespective of ownership, that shall be included in the risk assessment. *[Violation Risk Factor: Medium; Time-Horizon: Long-term Planning]*

2.1. The criteria shall, at a minimum include the following:

2.1.1. Line-of-sight between multiple Transmission station or Transmission substation yards from a single site.

2.1.2. Ease of access from a common public roadway that exists between multiple Transmission stations or Transmission substation yards.

2.1.3. The Transmission station or Transmission substation yards are in close enough proximity that a single event can impact multiple Transmission stations or Transmission substations.

M2. Examples of evidence may include, but are not limited to, dated written or electronic documentation of the criteria used to determine the Transmission station(s) and Transmission substation(s) in proximity to those identified in Requirement R1 and the list of groups of Transmission station(s) and Transmission substation(s) identified in Requirements R1 and R2.

R3. Each Transmission Owner shall have a documented risk assessment methodology for evaluating the loss of each Transmission station(s) and Transmission substation(s) identified as applicable. The methodology shall include, at a minimum, the following: *[Violation Risk Factor: Lower; Time-Horizon: Long-term Planning]*

3.1. Technical rationale for determining the amount of acceptable load loss, the amount of acceptable generation loss, and post-event response resulting in instability, uncontrolled separation, or Cascading within an Interconnection.

3.1.1. Load loss, generation loss, and post-event response within an Interconnection shall be evaluated, using at a minimum the following:

3.1.1.1. Steady state voltages

3.1.1.2. Transient voltage response

3.1.1.3. Thermal loading of Facilities

3.1.1.4. Relay loadability

3.1.1.5. Post-contingency voltage deviation

3.1.1.6. Rotor angle stability

3.1.1.7. Loss of IBR generation

3.1.1.8. Frequency exceeding generator limits

3.1.1.9. Frequency stability

3.1.1.10. Acceptable damping of oscillations

3.1.1.11. Cascading line tripping

3.1.1.12. Steady-state voltage stability

3.1.2. Technically supported thresholds for acceptable load loss and acceptable generation loss.

3.2. Analysis at System peak, Off-Peak Load, and other System conditions susceptible to instability, uncontrolled separation, or Cascading within an Interconnection shall be conducted in dynamic and steady state simulations.

3.2.1. Steady state analysis shall include the removal of all elements that Protection Systems and other controls are expected to automatically disconnect for each event, including any tripped facilities from dynamic simulations.

3.2.2. A Transmission station or Transmission substation that is already identified as critical to the Interconnection in dynamic or steady state studies does not require any additional studies.

3.3. Analysis of fault simulations, as follows:

3.4. If the Transmission station(s) or Transmission substation(s) identified in accordance with Requirement R1 is a singular Transmission station or Transmission substation, then fault simulations shall include a bolted 3-phase fault at the highest voltage level bus.

3.5. If the Transmission station(s) or Transmission substation(s) identified in accordance with Requirement R2 includes more than one Transmission station

or Transmission substation, then fault simulations shall include simultaneous single-phase faults at the highest voltage level buses of each of the Transmission station(s) or Transmission substation(s).

3.6. Fault simulations shall assume the loss of communication and system protection at the Transmission station(s) or Transmission substation(s) studied under Requirement R3, Parts 3.4 and 3.5.

3.6.1. Delayed (remote) clearing times shall be used unless otherwise technically substantiated.

3.6.2. Actual clearing times shall be used unless otherwise technically substantiated.

M3. Each Transmission Owner shall provide dated evidence, such as electronic or hard copies, of risk assessment methodology satisfying Requirement R3.

R4. Each Transmission Owner with jointly owned Transmission station(s) and Transmission substation(s) shall coordinate to determine and identify each entity's individual and joint responsibilities for performing any required risk assessments at least once every 36 calendar months. *[VRF: Medium; Time-Horizon: Operations Planning, Long-term Planning]*

M4. Examples of acceptable evidence may include, but are not limited to, dated documentation, such as meeting minutes, agreements, and email correspondence, that identifies that agreement has been reached on individual and joint responsibilities for performing the required studies and assessments.

R5. Each Transmission Owner shall conduct a risk assessment, using the methodology established in Requirement R3, on each Transmission station(s) and Transmission substation(s) identified as applicable in accordance with Requirements R1, R2, and R4 at least once every 36 calendar months. *[VRF: Medium; Time-Horizon: Operations Planning, Long-term Planning]*

5.1. Transmission station(s) and Transmission substation(s) previously identified as critical do not require subsequent risk assessments if they continue to be classified as critical.

5.2. The Transmission Owner shall identify the primary control center that operationally controls each Transmission station or Transmission substation classified as critical.

M5. Examples of acceptable evidence may include, but are not limited to, dated written or electronic documentation of the risk assessment satisfying Requirement R5. For Requirement R5, Part 5.2, examples of acceptable evidence may include, but are not limited to, dated written or electronic documentation of the identification of the primary control center that operationally controls each Transmission station or Transmission substation classified as critical.

R6. Each Transmission Owner shall have an unaffiliated third party verify the risk assessment performed under Requirement R5. The verification may occur concurrent with or after the risk assessment performed under Requirement R5. *[VRF: High; Time-Horizon: Long-term Planning]*

6.1. Resiliency or security measures designed collectively to deter, detect, delay, assess, communicate, and respond to potential physical threats and vulnerabilities identified during the evaluation conducted in Requirement R5. Each Transmission Owner shall select an unaffiliated verifying entity that is either:

6.1.1. A registered Planning Coordinator, Transmission Planner, or Reliability Coordinator; or

6.1.2. An entity that has transmission planning or analysis experience.

6.2. The unaffiliated third party verification shall verify the Transmission Owner's risk assessment performed under Requirement R5, which may include recommendations for the addition or deletion of a Transmission station(s) or Transmission substation(s). The Transmission Owner shall ensure the verification is completed within 90 calendar days following the completion of the Requirement R5 risk assessment.

6.3. A timeline for executing the physical security enhancements and modifications specified in the physical security plan. If the unaffiliated verifying entity recommends that the Transmission Owner add a Transmission station(s) or Transmission substation(s) to, or remove a Transmission station(s) or Transmission substation(s) from, its identification under Requirement R5, the Transmission Owner shall either, within 60 calendar days of completion of the verification, for each recommended addition or removal of a Transmission station or Transmission substation:

6.3.1. Modify its identification under Requirement R5 consistent with the recommendation; or

6.3.2. Document the technical basis for not modifying the identification in accordance with the recommendation.

6.4. Each Transmission Owner shall implement procedures, such as the use of non-disclosure agreements, for protecting sensitive or confidential information made available to the unaffiliated third party verifier and to protect or exempt sensitive or confidential information developed pursuant to this Reliability Standard from public disclosure.

M6. Examples of acceptable evidence may include, but are not limited to, dated written or electronic documentation that the Transmission Owner completed an unaffiliated third party verification of the Requirement R5 risk assessment and satisfied all of the applicable provisions of Requirement R6, including, if applicable, documenting the

technical basis for not modifying the identification in Requirements R1, R2, R3, R4, and R5 as specified under Part 6.3. Additionally, examples of evidence may include, but are not limited to, written or electronic documentation of procedures to protect information under Part 6.4.

R7. For a primary control center(s) identified by the Transmission Owner according to Requirement R5, Part 5.2 that a) operationally controls an identified Transmission station or Transmission substation verified according to Requirement R5, and b) is not under the operational control of the Transmission Owner: the Transmission Owner shall, within seven calendar days following completion of Requirement R5, notify the Transmission Operator that has operational control of the primary control center of such identification and the date of completion of Requirement R5 . *[VRF: Medium; Time-Horizon: Long-term Planning]*

7.1. If a Transmission station or Transmission substation previously identified under Requirements R1, R2, R3, R4, and R5 and verified according to Requirement R6 is removed from the identification during a subsequent risk assessment performed according to Requirement R5 or a verification according to Requirement R6, then the Transmission Owner shall, within seven calendar days following the verification or the subsequent risk assessment, notify the Transmission Operator that has operational control of the primary control center of the removal.

M7. Examples of acceptable evidence may include, but are not limited to, written or electronic notifications or communications that the Transmission Owner notified each Transmission Operator, as applicable, according to Requirement R7.

R8. Each Transmission Owner that identified a Transmission station, Transmission substation, or a primary control center in Requirement R5 and verified according to Requirement R6, and each Transmission Operator notified by a Transmission Owner according to Requirement R7, shall conduct an evaluation of the potential threats and vulnerabilities of a physical attack to each of their respective Transmission station(s), Transmission substation(s), and primary control center(s) identified in Requirement R5 and verified according to Requirement R6. The evaluation shall consider the following: *[VRF: Medium; Time-Horizon: Operations Planning, Long-term Planning]*

8.1. Unique characteristics of the identified and verified Transmission station(s), Transmission substation(s), and primary control center(s);

8.2. Prior history of attack on similar facilities taking into account the frequency, geographic proximity, and severity of past physical security related events; and

8.3. Intelligence or threat warnings received from sources such as law enforcement, the Electric Reliability Organization (ERO), the Electricity Sector Information Sharing and Analysis Center (ES-ISAC), U.S. federal and/or Canadian governmental agencies, or their successors.

M8. Examples of evidence may include, but are not limited to, dated written or electronic documentation that the Transmission Owner or Transmission Operator conducted an evaluation of the potential threats and vulnerabilities of a physical attack to their respective Transmission station(s), Transmission substation(s), and primary control center(s) as specified in Requirement R8.

R9. Each Transmission Owner that identified a Transmission station, Transmission substation, or primary control center in Requirement R5 and verified according to Requirement R6, and each Transmission Operator notified by a Transmission Owner according to Requirement R7, shall develop and implement a documented physical security plan(s) that covers their respective Transmission station(s), Transmission substation(s), and primary control center(s). The physical security plan(s) shall be developed within 120 calendar days following the completion of Requirement R6 and executed according to the timeline specified in the physical security plan(s). The physical security plan(s) shall include the following attributes: [*Violation Risk Factor*: *High; Time-Horizon: Long-term Planning*]

9.1. Resiliency or security measures designed collectively to deter, detect, delay, assess, communicate, and respond to potential physical threats and vulnerabilities identified during the evaluation conducted in Requirement R8.

9.2. Law enforcement contact and coordination information.

9.3. A timeline for executing the physical security enhancements and modifications specified in the physical security plan.

9.4. Provisions to evaluate evolving physical threats, and their corresponding security measures, to the Transmission station(s), Transmission substation(s), or primary control center(s).

M9. Examples of evidence may include, but are not limited to, dated written or electronic documentation of its physical security plan(s) that covers their respective identified and verified Transmission station(s), Transmission substation(s), and primary control center(s) as specified in Requirement R6, and additional evidence demonstrating execution of the physical security plan according to the timeline specified in the physical security plan.

R10. Each Transmission Owner that identified a Transmission station, Transmission substation, or primary control center in Requirement R5 and verified according to Requirement R6, and each Transmission Operator notified by a Transmission Owner according to Requirement R7, shall have an unaffiliated third party review the evaluation performed under Requirement R8 and the security plan(s) developed under Requirement R9. The review may occur concurrently with or after completion of the evaluation performed under Requirement R8 and the security plan development under Requirement R9. *[VRF: Medium; Time-Horizon: Long-term Planning]*

10.1. Each Transmission Owner and Transmission Operator shall select an unaffiliated third party reviewer from the following:

- An entity or organization with electric industry physical security experience and whose review staff has at least one member who holds either a Certified Protection Professional (CPP) or Physical Security Professional (PSP) certification.
- An entity or organization approved by the ERO.
- A governmental agency with physical security expertise.
- An entity or organization with demonstrated law enforcement, government, or military physical security expertise.

10.2. The Transmission Owner or Transmission Operator, respectively, shall ensure that the unaffiliated third party review is completed within 90 calendar days of completing the security plan(s) developed in Requirement R9. The unaffiliated third party review may, but is not required to, include recommended changes to the evaluation performed under Requirement R8 or the security plan(s) developed under Requirement R9.

10.3. If the unaffiliated third party reviewer recommends changes to the evaluation performed under Requirement R8 or security plan(s) developed under Requirement R9, the Transmission Owner or Transmission Operator shall, within 60 calendar days of the completion of the unaffiliated third party review, for each recommendation:

- Modify its evaluation or security plan(s) consistent with the recommendation; or
- Document the reason(s) for not modifying the evaluation or security plan(s) consistent with the recommendation.

10.4. Each Transmission Owner and Transmission Operator shall implement procedures, such as the use of non-disclosure agreements, for protecting sensitive or confidential information made available to the unaffiliated third party reviewer and to protect or exempt sensitive or confidential information developed pursuant to this Reliability Standard from public disclosure.

M10. Examples of evidence may include, but are not limited to, written or electronic documentation that the Transmission Owner or Transmission Operator had an unaffiliated third party review the evaluation performed under Requirement R8 and the security plan(s) developed under Requirement R9 as specified in Requirement R10 including, if applicable, documenting the reasons for not modifying the evaluation or security plan(s) in accordance with a recommendation under Part 10.3. Additionally, examples of evidence may include, but are not limited to, written or electronic documentation of procedures to protect information under Part 10.4.

C. Compliance

1. Compliance Monitoring Process

1.1. Compliance Enforcement Authority: "Compliance Enforcement Authority" means NERC or the Regional Entity, or any entity as otherwise designated by an Applicable Governmental Authority, in their respective roles of monitoring and/or enforcing compliance with mandatory and enforceable Reliability Standards in their respective jurisdictions.

1.2. Evidence Retention: The following evidence retention period(s) identify the period of time an entity is required to retain specific evidence to demonstrate compliance. For instances where the evidence retention period specified below is shorter than the time since the last audit, the Compliance Enforcement Authority may ask an entity to provide other evidence during an on-site visit to show that it was compliant for the full-time period since the last audit.

The Transmission Owner and Transmission Operator shall keep data or evidence to show compliance, as identified below, unless directed by its Compliance Enforcement Authority (CEA) to retain specific evidence for a longer period of time as part of an investigation:

The responsible entities shall retain evidence, as per Requirements R1 through R10, for three years.

If a Responsible Entity is found non-compliant, it shall keep information related to the non-compliance until mitigation is complete and approved, or for the time specified above, whichever is longer.

The Compliance Enforcement Authority shall keep the last audit records and all requested and submitted subsequent audit records.

1.3. Compliance Monitoring and Enforcement Program: As defined in the NERC Rules of Procedure, "Compliance Monitoring and Enforcement Program" refers to the identification of the processes that will be used to evaluate data or information for the purpose of assessing performance or outcomes with the associated Reliability Standard.

Violation Severity Levels

	Violation Severity Levels			
	Lower VSL	**Moderate VSL**	**High VSL**	**Severe VSL**
R1.	The Transmission Owner identified a list of applicable Transmission station(s) or Transmission substation(s) per Attachment 1, but did so after 36 calendar months, but less than or equal to 38 calendar months. OR The Transmission Owner identified a list of applicable substations, but failed to identify less than or equal to 10% of the applicable Transmission station(s) or Transmission substation(s) per Attachment 1.	The Transmission Owner identified a list of applicable Transmission station(s) or Transmission substation(s) per Attachment 1, but did so after 38 calendar months, but less than or equal to 40 calendar months. OR The Transmission Owner identified a list of applicable substations, but failed to identify more than 10% and less than or equal to 20% of the applicable Transmission station(s) or Transmission substation(s) per Attachment 1.	The Transmission Owner identified a list of applicable Transmission station(s) or Transmission substation(s) per Attachment 1, but did so after 40 calendar months, but less than or equal to 42 calendar months. OR The Transmission Owner identified a list of applicable substations, but failed to identify more than 20% and less than or equal to 30% of the applicable Transmission station(s) or Transmission substation(s) per Attachment 1.	The Transmission Owner failed to identify a list of applicable Transmission station(s) or Transmission substation(s) per Attachment 1. OR The Transmission Owner identified a list of applicable Transmission station(s) or Transmission substation(s) per Attachment 1, but did so after more than 42 calendar months. OR The Transmission Owner identified a list of applicable substations, but failed to identify more than 30% of the applicable Transmission station(s) or Transmission substation(s) per Attachment 1.

	Violation Severity Levels			
	Lower VSL	Moderate VSL	High VSL	Severe VSL
R2.			The Transmission Owner had insufficient documented criteria for determining when Transmission station(s) or Transmission substation(s) were in proximity for those identified in Requirement R1. OR The Transmission Owner failed to use the documented criteria to identify all Transmission station(s) or Transmission substation(s) in proximity.	The Transmission Owner did not have documented criteria to determine when Transmission station(s) or Transmission substation(s) were in proximity for those identified in Requirement R1. OR The Transmission Owner failed to use the documented criteria to identify which Transmission station(s) or Transmission substation(s) in proximity.
R3.	The Transmission Owner has a risk assessment methodology that failed to include one of the requirements listed in Requirement R3, Parts 3.1 through 3.6.	The Transmission Owner has a risk assessment methodology that failed to include two of the requirements listed in Requirement R3, Parts 3.1 through 3.6.	The Transmission Owner has a risk assessment methodology that failed to include three or more of the requirements listed in Requirement R3, Parts 3.1 through 3.6.	The Transmission Owner does not have a risk assessment methodology.

	Violation Severity Levels			
	Lower VSL	Moderate VSL	High VSL	Severe VSL
R4.	The Transmission Owner performed a risk assessment, but did so after 36 calendar months, but less than or equal to 38 calendar months. OR The Transmission Owner performed a risk assessment inconsistent with one of the methodology requirements listed in Requirement R3, Parts 3.1 through 3.6.	The Transmission Owner performed a risk assessment, but did so after 38 calendar months, but less than or equal to 40 calendar months. OR The Transmission Owner performed a risk assessment inconsistent with two of the methodology requirements listed in Requirement R3, Parts 3.1 through 3.6. OR The Transmission Owner performed a risk assessment that was insufficient with respect to Requirement R4, Part 4.2.	The Transmission Owner performed a risk assessment inconsistent with three or more of the methodology requirements listed in Requirement R3, Parts 3.1 through 3.6. OR The Transmission Owner performed a risk assessment, but failed to include the primary control center identified in Requirement R4, Part 4.3.	The Transmission Owner performed a risk assessment, but did so after more than 42 calendar months.
R5.	The Transmission Owner performed a risk assessment, but did so after 36 calendar months, but less	The Transmission Owner performed a risk assessment, but did so after 38 calendar months, but less	The Transmission owner performed a risk assessment, but did so after 40 calendar months, but less	The Transmission Owner performed a risk assessment, but did so after more than 42 calendar months.

	Violation Severity Levels			
	Lower VSL	Moderate VSL	High VSL	Severe VSL
	than or equal to 38 calendar months. OR The Transmission Owner performed a risk assessment inconsistent with one of the methodology requirements listed in Requirement R3, Parts 3.1 through 3.6.	than or equal to 40 calendar months. OR The Transmission Owner performed a risk assessment inconsistent with two of the methodology requirements listed in Requirement R3, Parts 3.1 through 3.6. OR The Transmission Owner performed a risk assessment that was insufficient with respect to Requirement R4, Part 4.2.	than or equal to 42 calendar months. OR The Transmission Owner performed a risk assessment inconsistent with three or more of the methodology requirements listed in Requirement R3, Parts 3.1 through 3.6. OR The Transmission Owner performed a risk assessment, but failed to include the primary control center identified in Requirement R4, Part 4.3.	
R6.	The Transmission Owner had an unaffiliated third party verify the risk assessment performed under Requirement R4, but did so in more than 90 calendar	The Transmission Owner had an unaffiliated third party verify the risk assessment performed under Requirement R4, but did so more than 100 calendar	The Transmission Owner had an unaffiliated third party verify the risk assessment performed under Requirement R4, but did so more than 110 calendar	The Transmission Owner had an unaffiliated third party verify the risk assessment performed under Requirement R4, but did so more than 120 calendar days following completion of

	Violation Severity Levels			
	Lower VSL	Moderate VSL	High VSL	Severe VSL
	days, but less than or equal to 100 calendar days following completion of Requirement R4. OR The Transmission Owner had an unaffiliated third party verify the risk assessment performed under Requirement R4 and modified or documented the technical basis for not modifying its identification under Requirement R4 as required by Part 5.2, but did so more than 60 calendar days and less than or equal to 70 calendar days from completion of the third party verification.	days, but less than or equal to 110 calendar days following completion of Requirement R4. OR The Transmission Owner had an unaffiliated third party verify the risk assessment performed under Requirement R4 and modified or documented the technical basis for not modifying its identification under Requirement R4 as required by Part 5.2, but did so more than 70 calendar days and less than or equal to 80 calendar days from completion of the third party verification.	days, but less than or equal to 120 calendar days following completion of Requirement R4. OR The Transmission Owner had an unaffiliated third party verify the risk assessment performed under Requirement R4 and modified or documented the technical basis for not modifying its identification under Requirement R4 as required by Part 5.2, but did so more than 80 calendar days from completion of the third party verification; OR The Transmission Owner had an unaffiliated third party verify the risk assessment performed under	Requirement R4. OR The Transmission Owner failed to have an unaffiliated third party verify the risk assessment performed under Requirement R4. OR The Transmission Owner had an unaffiliated third party verify the risk assessment performed under Requirement R4, but failed to implement procedures for protecting information per Part 5.2.

	Violation Severity Levels			
	Lower VSL	Moderate VSL	High VSL	Severe VSL
			Requirement R4, but failed to modify or document the technical basis for not modifying its identification under R4 as required by Part 5.2.	
R7.	The Transmission Owner notified the Transmission Operator that operates the primary control center as specified in Requirement R6, but did so more than seven calendar days and less than or equal to nine calendar days following the completion of Requirement R5. OR The Transmission Owner notified the Transmission Operator that operates the primary control center of the removal from the identification in Requirement R4, but did so	The Transmission Owner notified the Transmission Operator that operates the primary control center as specified in Requirement R6, but did so more than nine calendar days and less than or equal to 11 calendar days following the completion of Requirement R5. OR The Transmission Owner notified the Transmission Operator that operates the primary control center of the removal from the identification in Requirement R4, but did so	The Transmission Owner notified the Transmission Operator that operates the primary control center as specified in Requirement R6, but did so more than 11 calendar days and less than or equal to 13 calendar days following the completion of Requirement R5. OR The Transmission Owner notified the Transmission Operator that operates the primary control center of the removal from the identification in Requirement R4, but did so	The Transmission Owner notified the Transmission Operator that operates the primary control center as specified in Requirement R6, but did so more than 13 calendar days following the completion of Requirement R5. OR The Transmission Owner failed to notify the Transmission Operator that it operates a control center identified in Requirement R4. OR

	Violation Severity Levels			
	Lower VSL	Moderate VSL	High VSL	Severe VSL
	more than seven calendar days and less than or equal to nine calendar days following the verification or the subsequent risk assessment.	more than nine calendar days and less than or equal to 11 calendar days following the verification or the subsequent risk assessment.	more than 11 calendar days and less than or equal to 13 calendar days following the verification or the subsequent risk assessment.	The Transmission Owner notified the Transmission Operator that operates the primary control center of the removal from the identification in Requirement R4, but did so more than 13 calendar days following the verification or the subsequent risk assessment. OR The Transmission Owner failed to notify the Transmission Operator that operates the primary control center of the removal from the identification in Requirement R4.

	Violation Severity Levels			
	Lower VSL	Moderate VSL	High VSL	Severe VSL
R8.	N/A	The Responsible Entity conducted an evaluation of the potential physical threats and vulnerabilities to each of its Transmission station(s), Transmission substation(s), and primary control center(s) identified in Requirement R4, but failed to consider one of Parts 7.1 through 7.3 in the evaluation.	The Responsible Entity conducted an evaluation of the potential physical threats and vulnerabilities to each of its Transmission station(s), Transmission substation(s), and primary control center(s) identified in Requirement R4, but failed to consider two of Parts 7.1 through 7.3 in the evaluation.	The Responsible Entity failed to conduct an evaluation of the potential physical threats and vulnerabilities to each of its Transmission station(s), Transmission substation(s), and primary control center(s) identified in Requirement R4. OR The Responsible Entity conducted an evaluation of the potential physical threats and vulnerabilities to each of its Transmission station(s), Transmission substation(s), and primary control center(s) identified in Requirement R4, but failed to consider Parts 7.1 through 7.3.

	Violation Severity Levels			
	Lower VSL	Moderate VSL	High VSL	Severe VSL
R9.	The Responsible Entity developed and implemented a documented physical security plan(s) that covers each of its Transmission station(s), Transmission substation(s), and primary control center(s) identified in Requirement R4, but did so more than 120 calendar days, but less than or equal to 130 calendar days after completing Requirement R5. OR The Responsible Entity developed and implemented a documented physical security plan(s) that covers its Transmission station(s), Transmission substation(s), and primary control center(s) identified in Requirement R4 and	The Responsible Entity developed and implemented a documented physical security plan(s) that covers each of its Transmission station(s), Transmission substation(s), and primary control center(s) identified in Requirement R4, but did so more than 130 calendar days, but less than or equal to 140 calendar days after completing Requirement R5. OR The Responsible Entity developed and implemented a documented physical security plan(s) that covers its Transmission station(s), Transmission substation(s), and primary control center(s) identified in Requirement R4 and	The Responsible Entity developed and implemented a documented physical security plan(s) that covers each of its Transmission station(s), Transmission substation(s), and primary control center(s) identified in Requirement R4, but did so more than 140 calendar days, but less than or equal to 150 calendar days after completing Requirement R5; OR The Responsible Entity developed and implemented a documented physical security plan(s) that covers its Transmission station(s), Transmission substation(s), and primary control center(s) identified in Requirement R4 and	The Responsible Entity developed and implemented a documented physical security plan(s) that covers each of its Transmission station(s), Transmission substation(s), and primary control center(s) identified in Requirement R4, but did so more than 150 calendar days after completing the verification in Requirement R5. OR The Responsible Entity failed to develop and implement a documented physical security plan(s) that covers its Transmission station(s), Transmission substation(s), and primary control center(s) identified in Requirement R4 and verified according to Requirement R5.

	Violation Severity Levels			
	Lower VSL	Moderate VSL	High VSL	Severe VSL
	verified according to Requirement R5, but failed to include one of Parts 8.1 through 8.4 in the plan.	verified according to Requirement R5, but failed to include two of Parts 8.1 through 8.4 in the plan.	verified according to Requirement R5, but failed to include three of Parts 8.1 through 8.4 in the plan.	OR The Responsible Entity developed and implemented a documented physical security plan(s) that covers its Transmission station(s), Transmission substation(s), and primary control center(s) identified in Requirement R4 and verified according to Requirement R5, but failed to include Parts 8.1 through 8.4 in the plan.
R10.	The Responsible Entity had an unaffiliated third party review the evaluation performed under Requirement R7 and the security plan(s) developed under Requirement R8, but did so in more than 90 calendar days, but less than or equal to 100 calendar days.	The Responsible Entity had an unaffiliated third party review the evaluation performed under Requirement R7 and the security plan(s) developed under Requirement R8, but did so in more than 100 calendar days, but less than or equal to 110 calendar days.	The Responsible Entity had an unaffiliated third party review the evaluation performed under Requirement R7 and the security plan(s) developed under Requirement R8, but did so more than 110 calendar days, but less than or equal to 120 calendar days.	The Responsible Entity failed to have an unaffiliated third party review the evaluation performed under Requirement R7 and the security plan(s) developed under Requirement R8 in more than 120 calendar days.

	Violation Severity Levels			
	Lower VSL	Moderate VSL	High VSL	Severe VSL
	OR The Responsible Entity had an unaffiliated third party review the evaluation performed under Requirement R7 and the security plan(s) developed under Requirement R8 and modified or documented the reason for not modifying the security plan(s) as specified in Part 9.3, but did so more than 60 calendar days and less than or equal to 70 calendar days following completion of the third party review.	OR The Responsible Entity had an unaffiliated third party review the evaluation performed under Requirement R7 and the security plan(s) developed under Requirement R8 and modified or documented the reason for not modifying the security plan(s) as specified in Part 9.3, but did so more than 70 calendar days and less than or equal to 80 calendar days following completion of the third party review.	OR The Responsible Entity had an unaffiliated third party review the evaluation performed under Requirement R7 and the security plan(s) developed under Requirement R8 and modified or documented the reason for not modifying the security plan(s) as specified in Part 9.3, but did so more than 80 calendar days following completion of the third party review. OR The Responsible Entity had an unaffiliated third party review the evaluation performed under Requirement R7 and the security plan(s) developed under Requirement R8, but	OR The Responsible Entity failed to have an unaffiliated third party review the evaluation performed under Requirement R7 and the security plan(s) developed under Requirement R8. OR The Responsible Entity had an unaffiliated third party review the evaluation performed under Requirement R7 and the security plan(s) developed under Requirement R8, but failed to implement procedures for protecting information per Part 9.4.

	Violation Severity Levels			
	Lower VSL	Moderate VSL	High VSL	Severe VSL
			did not document the reason for not modifying the security plan(s) as specified in Part 9.3.	

D. Regional Variances

None.

E. Interpretations

None.

F. Associated Documents

CIP-014-4 Implementation Plan

CIP-014-4 Technical Rationale Document

Version History

Version	Date	Action	Change Tracking
1	October 1, 2015	Effective Date	New
2	April 16, 2015	Revised to meet FERC Order 802 directive to remove “widespread”.	Revision
2	May 7, 2015	Adopted by the NERC Board of Trustees	
2	July 14, 2015	FERC Letter Order in Docket No. RD15-4-000 approving CIP-014-2	
3	January 19, 2022	Revised to remove Compliance Section 1.4	Revision
3	June 16, 2022	FERC Letter Order in Docket No.RD22-3-000 approving Modifications to CIP-014-3	Revision
3	June 16,2022	Effective Date	Revision
4	TBD	Revisions made by the Project 2023-06 drafting team	Revision

Attachment 1

Applicable Transmission station(s) or Transmission substation(s) are those that meet any of the following criteria:

1. Transmission Facilities operated at 500 kV or higher. For the purpose of this criterion, the collector bus for a generation plant is not considered a Transmission Facility, but is part of the generation interconnection Facility.

2. Transmission Facilities that are operating between 200 kV and 499 kV at a single station or substation, where the station or substation is connected at 200 kV or higher voltages to three or more other Transmission stations or substations and has an "aggregate weighted value" exceeding 3000 according to the table below. The "aggregate weighted value" for a single station or substation is determined by summing the "weight value per line" shown in the table below for each incoming and each outgoing BES Transmission Line that is connected to another Transmission station or substation. For the purpose of this criterion, the collector bus for a generation plant is not considered a Transmission Facility, but is part of the generation interconnection Facility.

2.1 Transmission station(s) or Transmission substation(s), that individually are not applicable, but are applicable when combined based on physical adjacency per Requirement R2, based on aggregated weighting value criteria from **Table 1** are to be considered as applicable.

Voltage Value of a Line	Weight Value per Line
less than 200 kV (not applicable)	(not applicable)
200 kV to 299 kV	700
300 kV to 499 kV	1300
500 kV and above	0

3. Transmission Facilities at a single station or substation location that are identified by its Reliability Coordinator, Planning Coordinator, or Transmission Planner as critical to the derivation of Interconnection Reliability Operating Limits (IROLs) and their associated contingencies.

4. Transmission Facilities identified as essential to meeting Nuclear Plant Interface Requirements.

Standard Development Timeline

This section is maintained by the drafting team during the development of the standard and will be removed when the standard is adopted by the NERC Board of Trustees (Board).

Description of Current Draft

CIP-014-4 is posted for a 45-day formal comment period with initial ballot.

Completed Actions	Date
Standards Committee approved Standard Authorization Request (SAR) for posting	June 21, 2023
SAR posted for comment	July 26, 2023 – August 24, 2023
Accepted Revised SAR	January 17, 2024

Anticipated Actions	Date
45-day formal or informal comment period with ballot	May 20, 2024 – July 3, 2024
45-day formal or informal comment period with additional ballot	August 2, 2024 – September 16, 2024
10-day final ballot	October 14, 2024 – October 23, 2024
Board adoption	December 12, 2024

New or Modified Term(s) Used in NERC Reliability Standards

This section includes all new or modified terms used in the proposed standard that will be included in the *Glossary of Terms Used in NERC Reliability Standards* upon applicable regulatory approval. Terms used in the proposed standard that are already defined and are not being modified can be found in the *Glossary of Terms Used in NERC Reliability Standards*. The new or revised terms listed below will be presented for approval with the proposed standard. Upon Board adoption, this section will be removed.

Term(s):

None.

A. Introduction

1. Title: Physical Security

2. Number: CIP-014-~~43~~

3. Purpose: To identify and protect Transmission stations and Transmission substations, and their associated primary control centers, that if rendered inoperable or damaged as a result of a physical attack could result in instability, uncontrolled separation, or Cascading within an Interconnection.

4. Applicability:

4.1. Functional Entities:

4.1.1 Transmission Owner. ~~that owns a Transmission station or Transmission substation that meets any of the following criteria:~~

~~**4.1.1.1** Transmission Facilities operated at 500 kV or higher. For the purpose of this criterion, the collector bus for a generation plant is not considered a Transmission Facility, but is part of the generation interconnection Facility.~~

~~**4.1.1.2** Transmission Facilities that are operating between 200 kV and 499 kV at a single station or substation, where the station or substation is connected at 200 kV or higher voltages to three or more other Transmission stations or substations and has an "aggregate weighted value" exceeding 3000 according to the table below. The "aggregate weighted value" for a single station or substation is determined by summing the "weight value per line" shown in the table below for each incoming and each outgoing BES Transmission Line that is connected to another Transmission station or substation. For the purpose of this criterion, the collector bus for a generation plant is not considered a Transmission Facility, but is part of the generation interconnection Facility.~~

~~Voltage Value of a Line~~	~~Weight Value per Line~~
~~less than 200 kV (not applicable)~~	~~(not applicable)~~
~~200 kV to 299 kV~~	~~700~~
~~300 kV to 499 kV~~	~~1300~~
~~500 kV and above~~	~~0~~

~~**4.1.1.3** Transmission Facilities at a single station or substation location that are identified by its Reliability Coordinator, Planning Coordinator, or~~

~~Transmission Planner as critical to the derivation of Interconnection Reliability Operating Limits (IROLs) and their associated contingencies.~~

~~**4.1.1.4** Transmission Facilities identified as essential to meeting Nuclear Plant Interface Requirements.~~

4.1.2 Transmission Operator.

Exemption: Facilities in a "protected area," as defined in 10 C.F.R. § 73.2, within the scope of a security plan approved or accepted by the Nuclear Regulatory Commission are not subject to this Standard; or~~,~~ Facilities within the scope of a security plan approved or accepted by the Canadian Nuclear Safety Commission are not subject to this Standard.

5. Effective Dates:

See Implementation Plan for CIP-014-42.

~~**6. Background:**~~

~~This Reliability Standard addresses the directives from the FERC order issued March 7, 2014, *Reliability Standards for Physical Security Measures*, 146 FERC ¶ 61,166 (2014), which required NERC to develop a physical security reliability standard(s) to identify and protect facilities that if rendered inoperable or damaged could result in instability, uncontrolled separation, or Cascading within an Interconnection.~~

B. Requirements and Measures

R1. Each Transmission Owner shall establish and maintain a list of applicable Transmission station(s) and Transmission substation(s) for performing risk assessments in accordance with the criteria in Attachment 1. Each Transmission Owner shall: *[Violation Risk Factor: High; Time-Horizon: Long-term Planning]*

1.1. Consider all Transmission station(s) and Transmission substation(s) that are existing or planned to be in service within 36 months; and

1.2. Review the list every 36 months and update the list, if necessary.

1.3. If the Transmission Owner identifies no applicable Transmission station(s) and Transmission substation(s), then no additional actions are required to fulfill the remainder of the standard.

M1. Examples of evidence may include, but are not limited to, dated written or electronic documentation of the Transmission stations and Transmission substations (existing or planned to be in service within 36 months) that meet the criteria in Attachment 1 as specified in Requirement R1.

R2. Each Transmission Owner shall establish and implement documented criteria for identifying Transmission station(s) and Transmission substation(s) in proximity to those identified in Requirement R1, irrespective of ownership, that shall be included in the risk assessment. . *[Violation Risk Factor: Medium; Time-Horizon: Long-term Planning]*

2.1. The criteria shall at a minimum include the following:

2.1.1. Line-of-sight between multiple Transmission station or Transmission substation yards from a single site.

2.1.2. Ease of access from a common public roadway that exists between multiple Transmission station or Transmission substation yards.

2.1.3. The Transmission station or Transmission substation yards are in close enough proximity that a single event can impact multiple Transmission stations or Transmission substations.

M2. Examples of evidence may include, but are not limited to, dated written or electronic documentation of the criteria used to determine the Transmission station(s) and Transmission substation(s) in proximity to those identified in Requirement R1 and the list of groups of Transmission station(s) and Transmission substation(s) identified in Requirements R1 and R2.

R3. Each Transmission Owner shall have a documented risk assessment methodology for evaluating the loss of each Transmission station(s) and Transmission substation(s)

identified as applicable. The methodology shall include, at a minimum, the following: *[Violation Risk Factor: Lower; Time-Horizon: Long-term Planning]*

3.1. Technical rationale for determining the amount of acceptable load loss, the amount of acceptable generation loss, and post-event response resulting in instability, uncontrolled separation, or Cascading within an Interconnection.

3.1.1. Load loss, generation loss, and post-event response within an Interconnection shall be evaluated, using at a minimum the following:

3.1.1.1. Steady state voltages

3.1.1.2. Transient voltage response

3.1.1.3. Thermal loading of Facilities

3.1.1.4. Relay loadability

3.1.1.5. Post-contingency voltage deviation

3.1.1.6. Rotor angle stability

3.1.1.7. Loss of IBR generation

3.1.1.8. Frequency exceeding generator limits

3.1.1.9. Frequency stability

3.1.1.10. Acceptable damping of oscillations

3.1.1.11. Cascading line tripping

3.1.1.12. Steady-state voltage stability

3.1.2. Technically supported thresholds for acceptable load loss and acceptable generation loss.

3.2. Analysis at System peak, Off-Peak Load, and other System conditions susceptible to instability, uncontrolled separation, or Cascading within an Interconnection shall be conducted in dynamic and steady state simulations.

3.2.1. Steady state analysis shall include the removal of all elements that Protection Systems and other controls are expected to automatically disconnect for each event, including any tripped facilities from dynamic simulations.

3.2.2. A Transmission station or Transmission substation that is already identified as critical to the Interconnection in dynamic or steady state studies does not require any additional studies.

3.3. Analysis of fault simulations, as follows:

3.4. If the Transmission station(s) or Transmission substation(s) identified in accordance with Requirement R1 is a singular Transmission station or

Transmission substation, then fault simulations shall include a bolted 3-phase fault at the highest voltage level bus.

3.5. If the Transmission station(s) or Transmission substation(s) identified in accordance with Requirement R2 includes more than one Transmission stations or Transmission substations, then fault simulations shall include simultaneous single-phase faults at the highest voltage level buses of each of the Transmission station(s) or Transmission substation(s).

3.6. Fault simulations shall assume the loss of communication and system protection at the Transmission station(s) or Transmission substation(s) studied under Requirement R3, Parts 3.4 and 3.5.

3.6.1. Delayed (remote) clearing times shall be used unless otherwise technically substantiated.

3.6.2. Actual clearing times shall be used unless otherwise technically substantiated.

M3. Each Transmission Owner shall provide dated evidence, such as electronic or hard copies, of risk assessment methodology satisfying Requirement R3.

R4. Each Transmission Owner with jointly owned Transmission station(s) and Transmission substation(s) shall coordinate to determine and identify each entity's individual and joint responsibilities for performing any required risk assessments at least once every 36 calendar months. *[VRF: Medium; Time-Horizon: Operations Planning, Long-term Planning]*

M4. Examples of acceptable evidence may include, but are not limited to, dated documentation, such as meeting minutes, agreements, and e-mail correspondence, that identifies that agreement has been reached on individual and joint responsibilities for performing the required studies and assessments.

R5. Each Transmission Owner shall conduct a risk assessment, using the methodology established in Requirement R3, on each Transmission station(s) and Transmission substation(s) identified as applicable in accordance with Requirements R1, R2, and R4 at least once every 36 calendar months. *[VRF: Medium; Time-Horizon: Operations Planning, Long-term Planning]*

5.1. Transmission station(s) and Transmission substation(s) previously identified as critical do not require subsequent risk assessments if they continue to be classified as critical.

5.2. The Transmission Owner shall identify the primary control center that operationally controls each Transmission station or Transmission substation classified as critical.

M5. Examples of acceptable evidence may include, but are not limited to, dated written or electronic documentation of the risk assessment satisfying Requirement R5. For Requirement R5, Part 5.2, examples of acceptable evidence may include, but are not

limited to, dated written or electronic documentation of the identification of the primary control center that operationally controls each Transmission station or Transmission substation classified as critical.

R1. Each Transmission Owner shall perform an initial risk assessment and subsequent risk assessments of its Transmission stations and Transmission substations (existing and planned to be in service within 24 months) that meet the criteria specified in Applicability Section 4.1.1. The initial and subsequent risk assessments shall consist of a transmission analysis or transmission analyses designed to identify the Transmission station(s) and Transmission substation(s) that if rendered inoperable or damaged could result in instability, uncontrolled separation, or Cascading within an Interconnection. *[VRF: High; Time Horizon: Long-term Planning]*

1.1. Subsequent risk assessments shall be performed:

- At least once every 30 calendar months for a Transmission Owner that has identified in its previous risk assessment (as verified according to Requirement R2) one or more Transmission stations or Transmission substations that if rendered inoperable or damaged could result in instability, uncontrolled separation, or Cascading within an Interconnection; or
- At least once every 60 calendar months for a Transmission Owner that has not identified in its previous risk assessment (as verified according to Requirement R2) any Transmission stations or Transmission substations that if rendered inoperable or damaged could result in instability, uncontrolled separation, or Cascading within an Interconnection.

1.2. The Transmission Owner shall identify the primary control center that operationally controls each Transmission station or Transmission substation identified in the Requirement R1 risk assessment.

M1. Examples of acceptable evidence may include, but are not limited to, dated written or electronic documentation of the risk assessment of its Transmission stations and Transmission substations (existing and planned to be in service within 24 months) that meet the criteria in Applicability Section 4.1.1 as specified in Requirement R1. Additionally, examples of acceptable evidence may include, but are not limited to, dated written or electronic documentation of the identification of the primary control center that operationally controls each Transmission station or Transmission substation identified in the Requirement R1 risk assessment as specified in Requirement R1, Part 1.2.

R2.R6. Each Transmission Owner shall have an unaffiliated third party verify the risk assessment performed under Requirement R51. The verification may occur concurrent with or after the risk assessment performed under Requirement R51. *[VRF: Medium; Time-Horizon: Long-term Planning]*

~~2.1.~~6.1. Each Transmission Owner shall select an unaffiliated verifying entity that is either:

- 6.1.1. A registered Planning Coordinator, Transmission Planner, or Reliability Coordinator; or
- 6.1.2. An entity that has transmission planning or analysis experience.

~~2.2.~~6.2. The unaffiliated third party verification shall verify the Transmission Owner's risk assessment performed under Requirement R1, which may include recommendations for the addition or deletion of a Transmission station(s) or Transmission substation(s). The Transmission Owner shall ensure the verification is completed within 90 calendar days following the completion of the Requirement R5~~1~~ risk assessment.

~~2.3.~~6.3. If the unaffiliated verifying entity recommends that the Transmission Owner add a Transmission station(s) or Transmission substation(s) to, or remove a Transmission station(s) or Transmission substation(s) from, its identification under Requirement R5~~1~~, the Transmission Owner shall either, within 60 calendar days of completion of the verification, for each recommended addition or removal of a Transmission station or Transmission substation:

- 6.3.1. Modify its identification under Requirement R5~~1~~ consistent with the recommendation; or
- 6.3.2. Document the technical basis for not modifying the identification in accordance with the recommendation.

~~2.4.~~6.4. Each Transmission Owner shall implement procedures, such as the use of non-disclosure agreements, for protecting sensitive or confidential information made available to the unaffiliated third party verifier and to protect or exempt sensitive or confidential information developed pursuant to this Reliability Standard from public disclosure.

M6~~2~~. Examples of acceptable evidence may include, but are not limited to, dated written or electronic documentation that the Transmission Owner completed an unaffiliated third party verification of the Requirement R5~~1~~ risk assessment and satisfied all of the applicable provisions of Requirement R6~~2~~, including, if applicable, documenting the technical basis for not modifying the Requirement R1, R2, R3, R4 and R5 identification as specified under Part 6~~2~~.3. Additionally, examples of evidence may include, but are not limited to, written or electronic documentation of procedures to protect information under Part 6~~2~~.4.

~~R3.~~R7. For a primary control center(s) identified by the Transmission Owner according to Requirement R5~~1~~, Part 5~~1~~.2 that a) operationally controls an identified Transmission station or Transmission substation verified according to Requirement

R5~~2~~, and b) is not under the operational control of the Transmission Owner: the Transmission Owner shall, within seven calendar days following completion of Requirement R5~~2~~, notify the Transmission Operator that has operational control of the primary control center of such identification and the date of completion of Requirement R5~~2~~. *[VRF: Lower; Time-Horizon: Long-term Planning]*

~~3.1.~~7.1. If a Transmission station or Transmission substation previously identified under Requirement R1, R2, R3, R4, and R5 and verified according to Requirement R6~~2~~ is removed from the identification during a subsequent risk assessment performed according to Requirement R1 or a verification according to Requirement R5~~2~~, then the Transmission Owner shall, within seven calendar days following the verification or the subsequent risk assessment, notify the Transmission Operator that has operational control of the primary control center of the removal.

M7~~3~~. Examples of acceptable evidence may include, but are not limited to, dated written or electronic notifications or communications that the Transmission Owner notified each Transmission Operator, as applicable, according to Requirement R7~~3~~.

~~R4.~~R8. Each Transmission Owner that identified a Transmission station, Transmission substation, or a primary control center in Requirement R5~~1~~ and verified according to Requirement R6~~2~~, and each Transmission Operator notified by a Transmission Owner according to Requirement R7~~3~~, shall conduct an evaluation of the potential threats and vulnerabilities of a physical attack to each of their respective Transmission station(s), Transmission substation(s), and primary control center(s) identified in Requirement R5~~1~~ and verified according to Requirement R6~~2~~. The evaluation shall consider the following: *[VRF: Medium; Time-Horizon: Operations Planning, Long-term Planning]*

~~4.1.~~8.1. Unique characteristics of the identified and verified Transmission station(s), Transmission substation(s), and primary control center(s);

~~4.2.~~8.2. Prior history of attack on similar facilities taking into account the frequency, geographic proximity, and severity of past physical security related events; and

~~4.3.~~8.3. Intelligence or threat warnings received from sources such as law enforcement, the Electric Reliability Organization (ERO), the Electricity Sector Information Sharing and Analysis Center (ES-ISAC), U.S. federal and/or Canadian governmental agencies, or their successors.

M8~~4~~. Examples of evidence may include, but are not limited to, dated written or electronic documentation that the Transmission Owner or Transmission Operator conducted an evaluation of the potential threats and vulnerabilities of a physical attack to their respective Transmission station(s), Transmission substation(s) and primary control center(s) as specified in Requirement R8~~4~~.

~~R5.~~R9. Each Transmission Owner that identified a Transmission station, Transmission substation, or primary control center in Requirement R~~5~~1 and verified according to Requirement R~~6~~2, and each Transmission Operator notified by a Transmission Owner according to Requirement R~~7~~3, shall develop and implement a documented physical security plan(s) that covers their respective Transmission station(s), Transmission substation(s), and primary control center(s). The physical security plan(s) shall be developed within 120 calendar days following the completion of Requirement R~~6~~2 and executed according to the timeline specified in the physical security plan(s). The physical security plan(s) shall include the following attributes: *[VRF: High; Time-Horizon: Long-term Planning]*

~~5.1.~~9.1. Resiliency or security measures designed collectively to deter, detect, delay, assess, communicate, and respond to potential physical threats and vulnerabilities identified during the evaluation conducted in Requirement R4.

~~5.2.~~9.2. Law enforcement contact and coordination information.

~~5.3.~~9.3. A timeline for executing the physical security enhancements and modifications specified in the physical security plan.

~~5.4.~~9.4. Provisions to evaluate evolving physical threats, and their corresponding security measures, to the Transmission station(s), Transmission substation(s), or primary control center(s).

M~~5~~9. Examples of evidence may include, but are not limited to, dated written or electronic documentation of its physical security plan(s) that covers their respective identified and verified Transmission station(s), Transmission substation(s), and primary control center(s) as specified in Requirement R~~6~~5, and additional evidence demonstrating execution of the physical security plan according to the timeline specified in the physical security plan.

~~R6.~~R10. Each Transmission Owner that identified a Transmission station, Transmission substation, or primary control center in Requirement R~~5~~1 and verified according to Requirement R~~6~~2, and each Transmission Operator notified by a Transmission Owner according to Requirement R~~7~~3, shall have an unaffiliated third party review the evaluation performed under Requirement R~~8~~4 and the security plan(s) developed under Requirement R~~9~~5. The review may occur concurrently with or after completion of the evaluation performed under Requirement R~~8~~4 and the security plan development under Requirement R~~9~~5. *[VRF: Medium; Time-Horizon: Long-term Planning]*

~~6.1.~~10.1. Each Transmission Owner and Transmission Operator shall select an unaffiliated third party reviewer from the following:

- An entity or organization with electric industry physical security experience and whose review staff has at least one member who holds either a Certified

Protection Professional (CPP) or Physical Security Professional (PSP) certification.

- An entity or organization approved by the ERO.
- A governmental agency with physical security expertise.
- An entity or organization with demonstrated law enforcement, government, or military physical security expertise.

~~6.2.~~10.2. The Transmission Owner or Transmission Operator, respectively, shall ensure that the unaffiliated third party review is completed within 90 calendar days of completing the security plan(s) developed in Requirement R~~9~~5. The unaffiliated third party review may, but is not required to, include recommended changes to the evaluation performed under Requirement R~~8~~4 or the security plan(s) developed under Requirement R~~9~~5.

~~6.3.~~10.3. If the unaffiliated third party reviewer recommends changes to the evaluation performed under Requirement R~~8~~4 or security plan(s) developed under Requirement R~~9~~5, the Transmission Owner or Transmission Operator shall, within 60 calendar days of the completion of the unaffiliated third party review, for each recommendation:

- Modify its evaluation or security plan(s) consistent with the recommendation; or
- Document the reason(s) for not modifying the evaluation or security plan(s) consistent with the recommendation.

~~6.4.~~10.4. Each Transmission Owner and Transmission Operator shall implement procedures, such as the use of non-disclosure agreements, for protecting sensitive or confidential information made available to the unaffiliated third party reviewer and to protect or exempt sensitive or confidential information developed pursuant to this Reliability Standard from public disclosure.

M~~10~~6. Examples of evidence may include, but are not limited to, written or electronic documentation that the Transmission Owner or Transmission Operator had an unaffiliated third party review the evaluation performed under Requirement R~~8~~4 and the security plan(s) developed under Requirement R~~9~~5 as specified in Requirement R~~10~~6 including, if applicable, documenting the reasons for not modifying the evaluation or security plan(s) in accordance with a recommendation under Part ~~10~~6.3. Additionally, examples of evidence may include, but are not limited to, written or electronic documentation of procedures to protect information under Part ~~10~~6.4.

C. Compliance

1. Compliance Monitoring Process

1.1. Compliance Enforcement Authority: "Compliance Enforcement Authority" means NERC or the Regional Entity, or any entity as otherwise designated by an Applicable Governmental Authority, in their respective roles of monitoring and/or enforcing compliance with mandatory and enforceable Reliability Standards in their respective jurisdictions.

~~As defined in the NERC Rules of Procedure, "Compliance Enforcement Authority" (CEA) means NERC or the Regional Entity in their respective roles of monitoring and enforcing compliance with the NERC Reliability Standards.~~

1.2. Evidence Retention:

The following evidence retention periods identify the period of time an entity is required to retain specific evidence to demonstrate compliance. For instances where the evidence retention period specified below is shorter than the time since the last audit, the CEA may ask an entity to provide other evidence during an on-site visit to show that it was compliant for the full time period since the last audit.

The Transmission Owner and Transmission Operator shall keep data or evidence to show compliance, as identified below, unless directed by its Compliance Enforcement Authority (CEA) to retain specific evidence for a longer period of time as part of an investigation.

The responsible entities shall retain ~~documentation as~~ evidence, as per Requirements R1 through R10, for three years.

If a Responsible Entity is found non-compliant, it shall keep information related to the non-compliance until mitigation is complete and approved, or for the time specified above, whichever is longer.

The Compliance Enforcement Authority shall keep the last audit records and all requested and submitted subsequent audit records.

~~The CEA shall keep the last audit records and all requested and submitted subsequent audit records, subject to the confidentiality provisions of Section 1500 of the Rules of Procedure and the provisions of Section 1.4 below.~~

1.3. Compliance Monitoring and Enforcement Program~~Assessment Processes~~: As defined in the NERC Rules of Procedure, "Compliance Monitoring and Enforcement Program" refers to the identification of the processes that will be used to evaluate data or information for the purpose of assessing performance or outcomes with the associated Reliability Standard.

~~Compliance Audits~~

~~Self-Certifications~~

~~Spot Checking~~

~~Compliance Violation Investigations~~

~~Self-Reporting~~

~~Complaints Text~~

Violation Severity Levels

~~2. Table of Compliance Elements~~

R #	~~Time Horizon~~	~~VRF~~	Violation Severity Levels (CIP-014-3)			
			Lower VSL	Moderate VSL	High VSL	Severe VSL
R1	~~Long-term Planning~~	~~High~~	The Transmission Owner identified a list of applicable Transmission station(s) or Transmission substation(s) per Attachment 1 but did so after 36 calendar months but less than or equal to 38 calendar months. OR The Transmission Owner identified a list of applicable substations but failed to identify less than or equal to 10% of the applicable Transmission station(s) or	The Transmission Owner identified a list of applicable Transmission station(s) or Transmission substation(s) per Attachment 1 but did so after 38 calendar months but less than or equal to 40 calendar months. OR The Transmission Owner identified a list of applicable substations but failed to identify more than 10% and less than or equal to 20% of the applicable Transmission station(s) or	The Transmission Owner identified a list of applicable Transmission station(s) or Transmission substation(s) per Attachment 1 but did so after 40 calendar months but less than or equal to 42 calendar months. OR The Transmission Owner identified a list of applicable substations but failed to identify more than 20% and less than or equal to 30% of the applicable Transmission station(s) or Transmission	The Transmission Owner failed to identify a list of applicable Transmission station(s) or Transmission substation(s) per Attachment 1. OR The Transmission Owner identified a list of applicable Transmission station(s) or Transmission substation(s) per Attachment 1 but did so after more than 42 calendar months. OR

R #	~~Time Horizon~~	~~VRF~~	Violation Severity Levels (CIP-014-3)			
			Lower VSL	Moderate VSL	High VSL	Severe VSL
			Transmission substation(s) per Attachment 1	Transmission substation(s) per Attachment 1	substation(s) per Attachment 1	The Transmission Owner identified a list of applicable substations but failed to identify more than 30% of the applicable Transmission station(s) or Transmission substation(s) per Attachment 1
R2	~~Long-term Planning~~	~~Medium~~			The Transmission Owner had insufficient documented criteria for determining when Transmission station(s) or Transmission substation(s) were in proximity for those identified in Requirement R1. OR The Transmission Owner failed to use the documented criteria to identify all Transmission station(s)	The Transmission Owner did not have documented criteria to determine when Transmission station(s) or Transmission substation(s) were in proximity for those identified in Requirement R1. OR The Transmission Owner failed to use the documented criteria to identify

R #	~~Time Horizon~~	~~VRF~~	Violation Severity Levels (CIP-014-3)			
			Lower VSL	Moderate VSL	High VSL	Severe VSL
					or Transmission substation(s) in proximity.	which Transmission station(s) or Transmission substation(s) in proximity.
R3	~~Long-term Planning~~	~~Lower~~	The Transmission Owner has a risk assessment methodology that failed to include one of the requirements listed in Requirement R3, Parts 3.1 through 3.6.	The Transmission Owner has a risk assessment methodology that failed to include two of the requirements listed in Requirement R3, Parts 3.1 through 3.6.	The Transmission Owner has a risk assessment methodology that failed to include three or more of the requirements listed in Requirement R3, Parts 3.1 through 3.6.	The Transmission Owner does not have a risk assessment methodology.
R4	~~Operations Planning, Long-term Planning~~	~~Medium~~	The Transmission Owner performed a risk assessment but did so after 36 calendar months but less than or equal to 38 calendar months. OR	The Transmission Owner performed a risk assessment but did so after 38 calendar months but less than or equal to 40 calendar months. OR	The Transmission owner performed a risk assessment but did so after 40 calendar months but less than or equal to 42 calendar months. OR	The Transmission Owner performed a risk assessment but did so after more than 42 calendar months.

R #	~~Time Horizon~~	~~VRF~~	Violation Severity Levels (CIP-014-3)			
			Lower VSL	Moderate VSL	High VSL	Severe VSL
			The Transmission Owner performed a risk assessment inconsistent with one of the methodology requirements listed in Requirement R3, Parts 3.1 through 3.6	The Transmission Owner performed a risk assessment inconsistent with two of the methodology requirements listed in Requirement R3, Parts 3.1 through 3.6. OR The Transmission Owner performed a risk assessment that was insufficient with respect to Requirement R4, Part 4.2.	The Transmission Owner performed a risk assessment inconsistent with three or more of the methodology requirements listed in Requirement R3, Parts 3.1 through 3.6. OR The Transmission Owner performed a risk assessment but failed to include the primary control center identified in Requirement R4, Part 4.3.	
R5	~~Operations Planning, Long-term Planning~~	~~Medium~~	The Transmission Owner performed a risk assessment but did so after 36 calendar months but less than or equal to 38 calendar months.	The Transmission Owner performed a risk assessment but did so after 38 calendar months but less than or equal to 40 calendar months.	The Transmission owner performed a risk assessment but did so after 40 calendar months but less than or equal to 42 calendar months.	The Transmission Owner performed a risk assessment but did so after more than 42 calendar months.

R #	~~Time Horizon~~	~~VRF~~	Violation Severity Levels (CIP-014-3)			
			Lower VSL	Moderate VSL	High VSL	Severe VSL
			OR The Transmission Owner performed a risk assessment inconsistent with one of the methodology requirements listed in Requirement R3, Parts 3.1 through 3.6	OR The Transmission Owner performed a risk assessment inconsistent with two of the methodology requirements listed in Requirement R3, Parts 3.1 through 3.6. OR The Transmission Owner performed a risk assessment that was insufficient with respect to Requirement R4, Part 4.2.	OR The Transmission Owner performed a risk assessment inconsistent with three or more of the methodology requirements listed in Requirement R3, Parts 3.1 through 3.6. OR The Transmission Owner performed a risk assessment but failed to include the primary control center identified in Requirement R4, Part 4.3.	
~~R1~~	~~Long-term Planning~~	~~High~~	~~The Transmission Owner performed an initial risk assessment but did so after the date specified in the implementation plan~~	~~The Transmission Owner performed an initial risk assessment but did so more than two calendar months after the date specified in the~~	~~The Transmission Owner performed an initial risk assessment but did so more than four calendar months after the date specified in the~~	~~The Transmission Owner performed an initial risk assessment but did so more than six calendar months after the date~~

R #	~~Time Horizon~~	~~VRF~~	Violation Severity Levels (CIP-014-3)			
			Lower VSL	Moderate VSL	High VSL	Severe VSL
			~~for performing the initial risk assessment but less than or equal to two calendar months after that date;~~ ~~OR~~ ~~The Transmission Owner that has identified in its previous risk assessment one or more Transmission stations or Transmission substations that if rendered inoperable or damaged could result in instability, uncontrolled separation, or Cascading within an Interconnection performed a subsequent risk assessment but did so after 30 calendar months but less than~~	~~implementation plan for performing the initial risk assessment but less than or equal to four calendar months after that date;~~ ~~OR~~ ~~The Transmission Owner that has identified in its previous risk assessment one or more Transmission stations or Transmission substations that if rendered inoperable or damaged could result in instability, uncontrolled separation, or Cascading within an Interconnection performed a subsequent risk assessment but did so after 32 calendar~~	~~implementation plan for performing the initial risk assessment but less than or equal to six calendar months after that date;~~ ~~OR~~ ~~The Transmission Owner that has identified in its previous risk assessment one or more Transmission stations or Transmission substations that if rendered inoperable or damaged could result in instability, uncontrolled separation, or Cascading within an Interconnection performed a subsequent risk assessment but did so after 34 calendar months but less than~~	~~specified in the implementation plan for performing the initial risk assessment;~~ ~~OR~~ ~~The Transmission Owner failed to perform an initial risk assessment;~~ ~~OR~~ ~~The Transmission Owner that has identified in its previous risk assessment one or more Transmission stations or Transmission substations that if rendered inoperable or damaged could result in instability, uncontrolled separation, or Cascading within an Interconnection performed a~~

R #	~~Time Horizon~~	~~VRF~~	Violation Severity Levels (CIP-014-3)			
			Lower VSL	Moderate VSL	High VSL	Severe VSL
			~~or equal to 32 calendar months;~~ ~~OR~~ ~~The Transmission Owner that has not identified in its previous risk assessment any Transmission stations or Transmission substations that if rendered inoperable or damaged could result in instability, uncontrolled separation, or Cascading within an Interconnection performed a subsequent risk assessment but did so after 60 calendar months but less than or equal to 62 calendar months.~~	~~months but less than or equal to 34 calendar months;~~ ~~OR~~ ~~The Transmission Owner that has not identified in its previous risk assessment any Transmission stations or Transmission substations that if rendered inoperable or damaged could result in instability, uncontrolled separation, or Cascading within an Interconnection performed a subsequent risk assessment but did so after 62 calendar months but less than or equal to 64 calendar months.~~	~~or equal to 36 calendar months;~~ ~~OR~~ ~~The Transmission Owner that has not identified in its previous risk assessment any Transmission stations or Transmission substations that if rendered inoperable or damaged could result in instability, uncontrolled separation, or Cascading within an Interconnection performed a subsequent risk assessment but did so after 64 calendar months but less than or equal to 66 calendar months;~~ ~~OR~~ ~~The Transmission Owner performed a~~	~~subsequent risk assessment but did so after more than 36 calendar months;~~ ~~OR~~ ~~The Transmission Owner that has identified in its previous risk assessment one or more Transmission stations or Transmission substations that if rendered inoperable or damaged could result in instability, uncontrolled separation, or Cascading within an Interconnection failed to perform a risk assessment;~~ ~~OR~~ ~~The Transmission Owner that has not identified in its previous risk~~

R #	~~Time Horizon~~	~~VRF~~	Violation Severity Levels (CIP-014-3)			
			Lower VSL	Moderate VSL	High VSL	Severe VSL
					~~risk assessment but failed to include Part 1.2.~~	~~assessment any Transmission stations or Transmission substations that if rendered inoperable or damaged could result in instability, uncontrolled separation, or Cascading within an Interconnection performed a subsequent risk assessment but did so after more than 66 calendar months;~~ ~~OR~~ ~~The Transmission Owner that has not identified in its previous risk assessment any Transmission station and Transmission substations that if rendered inoperable or damaged could~~

R #	~~Time Horizon~~	~~VRF~~	Violation Severity Levels (CIP-014-3)			
			Lower VSL	Moderate VSL	High VSL	Severe VSL
						~~result in instability, uncontrolled separation, or Cascading within an Interconnection failed to perform a subsequent risk assessment.~~
R6 ~~2~~	~~Long-term Planning~~	~~Medium~~	The Transmission Owner had an unaffiliated third party verify the risk assessment performed under Requirement R1 but did so in more than 90 calendar days but less than or equal to 100 calendar days following completion of Requirement R4~~1~~.~~;~~ OR The Transmission Owner had an unaffiliated third party verify the risk assessment performed under	The Transmission Owner had an unaffiliated third party verify the risk assessment performed under Requirement R1 but did so more than 100 calendar days but less than or equal to 110 calendar days following completion of Requirement R4~~1~~.~~;~~ OR~~r~~ The Transmission Owner had an unaffiliated third party verify the risk assessment performed under	The Transmission Owner had an unaffiliated third party verify the risk assessment performed under Requirement R1 but did so more than 110 calendar days but less than or equal to 120 calendar days following completion of Requirement R4~~1~~.~~;~~ OR The Transmission Owner had an unaffiliated third party verify the risk assessment performed under Requirement R4~~1~~ and modified or	The Transmission Owner had an unaffiliated third party verify the risk assessment performed under Requirement R1 but did so more than 120 calendar days following completion of Requirement R44~~1~~.~~;~~ OR The Transmission Owner failed to have an unaffiliated third party verify the risk assessment

R #	~~Time Horizon~~	~~VRF~~	Violation Severity Levels (CIP-014-3)			
			Lower VSL	Moderate VSL	High VSL	Severe VSL
			Requirement R~~1~~ and modified or documented the technical basis for not modifying its identification under Requirement R~~1~~ as required by Part 5.2~~2.3~~ but did so more than 60 calendar days and less than or equal to 70 calendar days from completion of the third party verification.	Requirement R~~1~~ and modified or documented the technical basis for not modifying its identification under Requirement R~~1~~ as required by Part ~~2.3~~5.2 but did so more than 70 calendar days and less than or equal to 80 calendar days from completion of the third party verification.	documented the technical basis for not modifying its identification under Requirement R1 as required by Part ~~2.3~~ 5.2but did so more than 80 calendar days from completion of the third party verification.~~;~~ OR The Transmission Owner had an unaffiliated third party verify the risk assessment performed under Requirement R1 but failed to modify or document the technical basis for not modifying its identification under R1 as required by Part ~~2.3~~5.2.	performed under Requirement R~~1~~.~~;~~ OR The Transmission Owner had an unaffiliated third party verify the risk assessment performed under Requirement R~~1~~ but failed to implement procedures for protecting information per Part ~~2.4~~5.2.
R7 ~~3~~	~~Long-term Planning~~	~~Lower~~	The Transmission Owner notified the Transmission	The Transmission Owner notified the Transmission	The Transmission Owner notified the Transmission Operator	The Transmission Owner notified the Transmission

R #	~~Time Horizon~~	~~VRF~~	Violation Severity Levels (CIP-014-3)			
			Lower VSL	Moderate VSL	High VSL	Severe VSL
			Operator that operates the primary control center as specified in Requirement R~~3~~ but did so more than seven calendar days and less than or equal to nine calendar days following the completion of Requirement R~~2.~~; OR The Transmission Owner notified the Transmission Operator that operates the primary control center of the removal from the identification in Requirement R~~1~~ but did so more than seven calendar days and less than or equal to nine calendar days following the verification or the	Operator that operates the primary control center as specified in Requirement R~~3~~ but did so more than nine calendar days and less than or equal to 11 calendar days following the completion of Requirement R~~2.~~; OR The Transmission Owner notified the Transmission Operator that operates the primary control center of the removal from the identification in Requirement R~~1~~ but did so more than nine calendar days and less than or equal to 11 calendar days following the verification or the	that operates the primary control center as specified in Requirement R~~3~~ but did so more than 11 calendar days and less than or equal to 13 calendar days following the completion of Requirement R~~2.~~; OR The Transmission Owner notified the Transmission Operator that operates the primary control center of the removal from the identification in Requirement R~~1~~ but did so more than 11 calendar days and less than or equal to 13 calendar days following the verification or the subsequent risk assessment.	Operator that operates the primary control center as specified in Requirement R~~3~~ but did so more than 13 calendar days following the completion of Requirement R~~2.~~; OR The Transmission Owner failed to notify the Transmission Operator that it operates a control center identified in Requirement R~~1.~~; OR The Transmission Owner notified the Transmission Operator that operates the primary control center of the removal from the identification in

R #	Time Horizon	VRF	Violation Severity Levels (CIP-014-3)			
			Lower VSL	Moderate VSL	High VSL	Severe VSL
			subsequent risk assessment.	subsequent risk assessment.		Requirement R41 but did so more than 13 calendar days following the verification or the subsequent risk assessment. OR The Transmission Owner failed to notify the Transmission Operator that operates the primary control center of the removal from the identification in Requirement R41.
R8 4	Operations Planning, Long-term Planning	Medium	N/A	The Responsible Entity conducted an evaluation of the potential physical threats and vulnerabilities to each of its Transmission station(s), Transmission	The Responsible Entity conducted an evaluation of the potential physical threats and vulnerabilities to each of its Transmission station(s), Transmission	The Responsible Entity failed to conduct an evaluation of the potential physical threats and vulnerabilities to each of its Transmission station(s),

R #	~~Time Horizon~~	~~VRF~~	Violation Severity Levels (CIP-014-3)			
			Lower VSL	Moderate VSL	High VSL	Severe VSL
				substation(s), and primary control center(s) identified in Requirement R~~4~~1 but failed to consider one of Parts ~~7~~4.1 through ~~7~~4.3 in the evaluation.	substation(s), and primary control center(s) identified in Requirement R~~4~~1 but failed to consider two of Parts ~~7~~4.1 through ~~7~~4.3 in the evaluation.	Transmission substation(s), and primary control center(s) identified in Requirement R~~4~~1.~~;~~ OR The Responsible Entity conducted an evaluation of the potential physical threats and vulnerabilities to each of its Transmission station(s), Transmission substation(s), and primary control center(s) identified in Requirement R~~4~~1 but failed to consider Parts ~~7~~4.1 through ~~7~~4.3.
R~~9~~ ~~5~~	~~Long-term Planning~~	~~High~~	The Responsible Entity developed and implemented a documented physical security plan(s) that	The Responsible Entity developed and implemented a documented physical security plan(s) that	The Responsible Entity developed and implemented a documented physical security plan(s) that	The Responsible Entity developed and implemented a documented physical security

R #	~~Time Horizon~~	~~VRF~~	Violation Severity Levels (CIP-014-3)			
			Lower VSL	Moderate VSL	High VSL	Severe VSL
			covers each of its Transmission station(s), Transmission substation(s), and primary control center(s) identified in Requirement R1 but did so more than 120 calendar days but less than or equal to 130 calendar days after completing Requirement R5~~2~~.; OR The Responsible Entity developed and implemented a documented physical security plan(s) that covers its Transmission station(s), Transmission substation(s), and primary control center(s) identified in Requirement R4~~1~~ and	covers each of its Transmission station(s), Transmission substation(s), and primary control center(s) identified in Requirement R4~~1~~ but did so more than 130 calendar days but less than or equal to 140 calendar days after completing Requirement R5~~2~~.; OR The Responsible Entity developed and implemented a documented physical security plan(s) that covers its Transmission station(s), Transmission substation(s), and primary control center(s) identified in Requirement R4~~1~~ and	covers each of its Transmission station(s), Transmission substation(s), and primary control center(s) identified in Requirement R4~~1~~ but did so more than 140 calendar days but less than or equal to 150 calendar days after completing Requirement R5~~2~~.; OR The Responsible Entity developed and implemented a documented physical security plan(s) that covers its Transmission station(s), Transmission substation(s), and primary control center(s) identified in Requirement R4~~1~~ and	plan(s) that covers each of its Transmission station(s), Transmission substation(s), and primary control center(s) identified in Requirement R4~~1~~ but did so more than 150 calendar days after completing the verification in Requirement R5~~2~~.; OR The Responsible Entity failed to develop and implement a documented physical security plan(s) that covers its Transmission station(s), Transmission substation(s), and primary control center(s) identified

R #	~~Time Horizon~~	~~VRF~~	Violation Severity Levels (CIP-014-3)			
			Lower VSL	Moderate VSL	High VSL	Severe VSL
			verified according to Requirement R5~~2~~ but failed to include one of Parts 8~~5~~.1 through 8~~5~~.4 in the plan.	verified according to Requirement R5~~2~~ but failed to include two of Parts 8~~5~~.1 through 8~~5~~.4 in the plan.	verified according to Requirement R5~~2~~ but failed to include three of Parts 8~~5~~.1 through 8~~5~~.4 in the plan.	in Requirement R4~~1~~ and verified according to Requirement R5~~2~~. OR The Responsible Entity developed and implemented a documented physical security plan(s) that covers its Transmission station(s), Transmission substation(s), and primary control center(s) identified in Requirement R4~~1~~ and verified according to Requirement R5~~2~~ but failed to include Parts 8~~5~~.1 through 8~~5~~.4 in the plan.
R1 0 ~~6~~	~~Long-term Planning~~	~~Medium~~	The Responsible Entity had an unaffiliated third party review the	The Responsible Entity had an unaffiliated third party review the	The Responsible Entity had an unaffiliated third party review the evaluation performed	The Responsible Entity failed to have an unaffiliated third party review the

R #	Time Horizon	VRF	Violation Severity Levels (CIP-014-3)			
			Lower VSL	Moderate VSL	High VSL	Severe VSL
			evaluation performed under Requirement R74 and the security plan(s) developed under Requirement R85 but did so in more than 90 calendar days but less than or equal to 100 calendar days.; OR The Responsible Entity had an unaffiliated third party review the evaluation performed under Requirement R74 and the security plan(s) developed under Requirement R85 and modified or documented the reason for not modifying the security plan(s) as specified in Part 96.3 but did so more than 60 calendar days and	evaluation performed under Requirement R74 and the security plan(s) developed under Requirement R85 but did so in more than 100 calendar days but less than or equal to 110 calendar days.; OR The Responsible Entity had an unaffiliated third party review the evaluation performed under Requirement R74 and the security plan(s) developed under Requirement R85 and modified or documented the reason for not modifying the security plan(s) as specified in Part 96.3 but did so more than 70 calendar days and	under Requirement R74 and the security plan(s) developed under Requirement R85 but did so more than 110 calendar days but less than or equal to 120 calendar days.; OR The Responsible Entity had an unaffiliated third party review the evaluation performed under Requirement R74 and the security plan(s) developed under Requirement R85 and modified or documented the reason for not modifying the security plan(s) as specified in Part 96.3 but did so more than 80 calendar days following completion of the third party review.;	evaluation performed under Requirement R74 and the security plan(s) developed under Requirement R85 in more than 120 calendar days.; OR The Responsible Entity failed to have an unaffiliated third party review the evaluation performed under Requirement R74 and the security plan(s) developed under Requirement R85.; OR The Responsible Entity had an unaffiliated third party review the evaluation performed under Requirement R74

R #	Time Horizon	VRF	Violation Severity Levels (CIP-014-3)			
			Lower VSL	Moderate VSL	High VSL	Severe VSL
			less than or equal to 70 calendar days following completion of the third party review.	less than or equal to 80 calendar days following completion of the third party review.	OR The Responsible Entity had an unaffiliated third party review the evaluation performed under Requirement R74 and the security plan(s) developed under Requirement R5 but did not document the reason for not modifying the security plan(s) as specified in Part 96.3.	and the security plan(s) developed under Requirement R85 but failed to implement procedures for protecting information per Part 96.4.

Attachment 1:

Applicable Transmission station(s) or Transmission substation(s) are those that meet any of the following criteria:

1. Transmission Facilities operated at 500 kV or higher. For the purpose of this criterion, the collector bus for a generation plant is not considered a Transmission Facility but is part of the generation interconnection Facility.

2. Transmission Facilities that are operating between 200 kV and 499 kV at a single station or substation, where the station or substation is connected at 200 kV or higher voltages to three or more other Transmission stations or substations and has an "aggregate weighted value" exceeding 3000 according to the table below. The "aggregate weighted value" for a single station or substation is determined by summing the "weight value per line" shown in the table below for each incoming and each outgoing BES Transmission Line that is connected to another Transmission station or substation. For the purpose of this criterion, the collector bus for a generation plant is not considered a Transmission Facility but is part of the generation interconnection Facility.

2.1 Transmission station(s) or Transmission substation(s), that individually are not applicable but are applicable when combined based on physical adjacency per Requirement R2, based on aggregated weighting value criteria from **Table 1** are to be considered as applicable.

Voltage Value of a Line	Weight Value per Line
less than 200 kV (not applicable)	(not applicable)
200 kV to 299 kV	700
300 kV to 499 kV	1300

500 kV and above	0

3. Transmission Facilities at a single station or substation location that are identified by its Reliability Coordinator, Planning Coordinator, or Transmission Planner as critical to the derivation of Interconnection Reliability Operating Limits (IROLs) and their associated contingencies.

4. Transmission Facilities identified as essential to meeting Nuclear Plant Interface Requirements.

D. Regional Variances

None.

E. Interpretations

None.

F. Associated Documents

CIP-014-4 Implementation Plan

CIP-014-4 Technical Rationale Document

~~None.~~

Version History

Version	Date	Action	Change Tracking
1	October 1, 2015	Effective Date	New
2	April 16, 2015	Revised to meet FERC Order 802 directive to remove “widespread”.	Revision
2	May 7, 2015	Adopted by the NERC Board of Trustees	
2	July 14, 2015	FERC Letter Order in Docket No. RD15-4-000 approving CIP-014-2	
3	January 19, 2022	Revised to remove Compliance Section 1.4	Revision
3	June 16, 2022	FERC Letter Order in Docket No.RD22-3-000 approving Modifications to CIP-014-3	Revision
3	June 16,2022	Effective Date	Revision
4	TBD	Adopted by NERC Board of Trustees	Revision

~~Guidelines and Technical Basis~~

~~Section 4 Applicability~~

~~The purpose of Reliability Standard CIP-014 is to protect Transmission stations and Transmission substations, and their associated primary control centers that if rendered inoperable or damaged as a result of a physical attack could result in instability, uncontrolled~~

~~separation, or Cascading within an Interconnection. To properly include those entities that own or operate such Facilities, the Reliability Standard CIP-014 first applies to Transmission Owners that own Transmission Facilities that meet the specific criteria in Applicability Section 4.1.1.1 through 4.1.1.4. The Facilities described in Applicability Section 4.1.1.1 through 4.1.1.4 mirror those Transmission Facilities that meet the bright line criteria for "Medium Impact" Transmission Facilities under Attachment 1 of Reliability Standard CIP-002-5.1. Each Transmission Owner that owns Transmission Facilities that meet the criteria in Section 4.1.1.1 through 4.1.1.4 is required to perform a risk assessment as specified in Requirement R1 to identify its Transmission stations and Transmission substations, and their associated primary control centers, that if rendered inoperable or damaged as a result of a physical attack could result in instability, uncontrolled separation, or Cascading within an Interconnection. The Standard Drafting Team (SDT) expects this population will be small and that many Transmission Owners that meet the applicability of this standard will not actually identify any such Facilities. Only those Transmission Owners with Transmission stations or Transmission substations identified in the risk assessment (and verified under Requirement R2) have performance obligations under Requirements R3 through R6.~~

~~This standard also applies to Transmission Operators. A Transmission Operator's obligations under the standard, however, are only triggered if the Transmission Operator is notified by an applicable Transmission Owner under Requirement R3 that the Transmission Operator operates a primary control center that operationally controls a Transmission station(s) or Transmission substation(s) identified in the Requirement R1 risk assessment. A primary control center operationally controls a Transmission station or Transmission substation when the control center's electronic actions can cause direct physical action at the identified Transmission station or Transmission substation, such as opening a breaker, as opposed to a control center that only has information from the Transmission station or Transmission substation and must coordinate direct action through another entity. Only Transmission Operators who are notified that they have primary control centers under this standard have performance obligations under Requirements R4 through R6. In other words, primary control center for purposes of this Standard is the control center that the Transmission Owner or Transmission Operator, respectively, uses as its primary, permanently-manned site to physically operate a Transmission station or Transmission substation that is identified in Requirement R1 and verified in Requirement R2. Control centers that provide back-up capability are not applicable, as they are a form of resiliency and intentionally redundant.~~

~~The SDT considered several options for bright line criteria that could be used to determine applicability and provide an initial threshold that defines the set of Transmission stations and Transmission substations that would meet the directives of the FERC order on physical security (*i.e.*, those that could cause instability, uncontrolled separation, or Cascading within an Interconnection). The SDT determined that using the criteria for Medium Impact Transmission Facilities in Attachment 1 of CIP-002-5.1 would provide a conservative threshold for defining which Transmission stations and Transmission substations must be included in the risk assessment in Requirement R1 of CIP-014. Additionally, the SDT concluded that using the CIP-002-5.1 Medium Impact criteria was appropriate because it has been approved by stakeholders, NERC, and FERC, and its use provides a technically sound basis to determine~~

which Transmission Owners should conduct the risk assessment. As described in CIP-002-5.1, the failure of a Transmission station or Transmission substation that meets the Medium Impact criteria could have the capability to result in exceeding one or more Interconnection Reliability Operating Limits (IROLs). The SDT understands that using this bright line criteria to determine applicability may require some Transmission Owners to perform risk assessments under Requirement R1 that will result in a finding that none of their Transmission stations or Transmission substations would pose a risk of instability, uncontrolled separation, or Cascading within an Interconnection. However, the SDT determined that higher bright lines could not be technically justified to ensure inclusion of all Transmission stations and Transmission substations, and their associated primary control centers that, if rendered inoperable or damaged as a result of a physical attack could result in instability, uncontrolled separation, or Cascading within an Interconnection. Further guidance and technical basis for the bright line criteria for Medium Impact Facilities can be found in the Guidelines and Technical Basis section of CIP-002-5.1.

Additionally, the SDT determined that it was not necessary to include Generator Operators and Generator Owners in the Reliability Standard. First, Transmission stations or Transmission substations interconnecting generation facilities are considered when determining applicability. Transmission Owners will consider those Transmission stations and Transmission substations that include a Transmission station on the high side of the Generator Step-up transformer (GSU) using Applicability Section 4.1.1.1 and 4.1.1.2. As an example, a Transmission station or Transmission substation identified as a Transmission Owner facility that interconnects generation will be subject to the Requirement R1 risk assessment if it operates at 500kV or greater or if it is connected at 200 kV – 499kV to three or more other Transmission stations or Transmission substations and has an "aggregate weighted value" exceeding 3000 according to the table in Applicability Section 4.1.1.2. Second, the Transmission analysis or analyses conducted under Requirement R1 should take into account the impact of the loss of generation connected to applicable Transmission stations or Transmission substations. Additionally, the FERC order does not explicitly mention generation assets and is reasonably understood to focus on the most critical Transmission Facilities. The diagram below shows an example of a station.

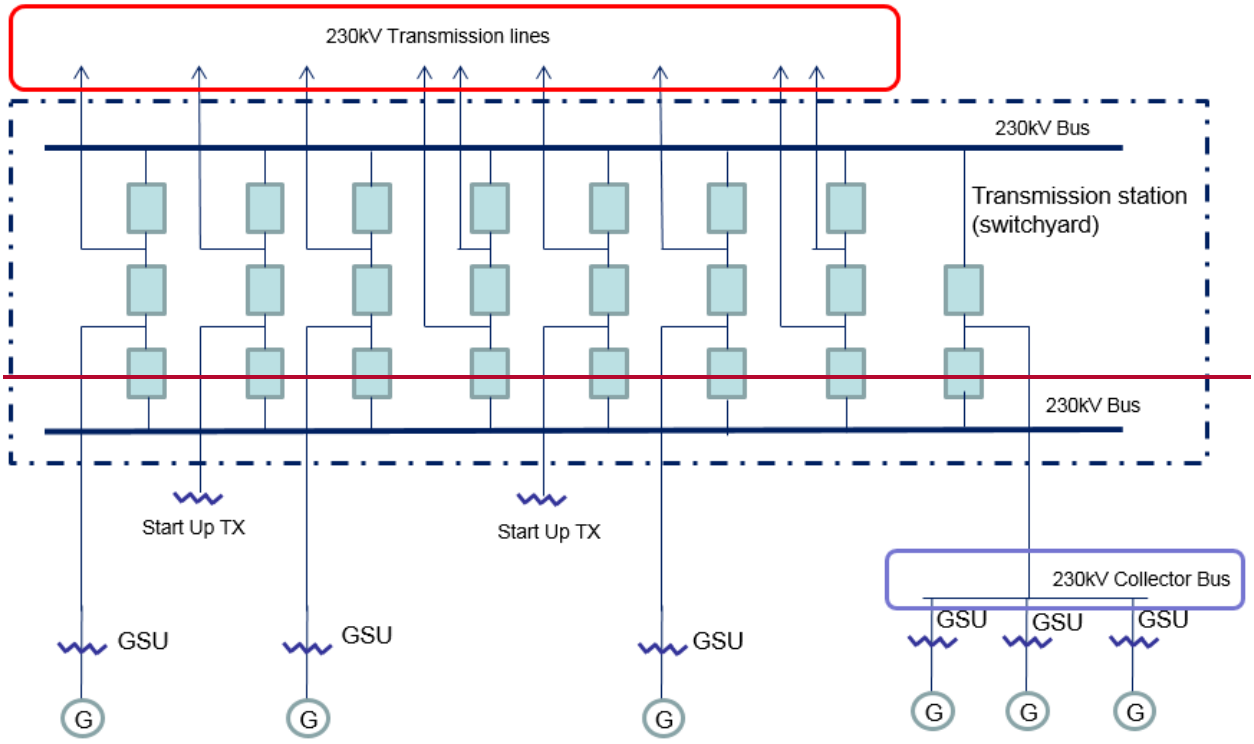

~~Also, the SDT uses the phrase "Transmission stations or Transmission substations" to recognize the existence of both stations and substations. Many entities in industry consider a substation to be a location with physical borders (i.e. fence, wall, etc.) that contains at least an autotransformer. Locations also exist that do not contain autotransformers, and many entities in industry refer to those locations as stations (switching stations or switchyards). Therefore, the SDT chose to use both "station" and "substation" to refer to the locations where groups of Transmission Facilities exist.~~

~~On the issue of joint ownership, the SDT recognizes that this issue is not unique to CIP-014, and expects that the applicable Transmission Owners and Transmission Operators will develop memorandums of understanding, agreements, Coordinated Functional Registrations, or procedures, etc., to designate responsibilities under CIP-014 when joint ownership is at issue, which is similar to what many entities have completed for other Reliability Standards.~~

~~The language contained in the applicability section regarding the collector bus is directly copied from CIP-002-5.1, Attachment 1, and has no additional meaning within the CIP-014 standard.~~

~~Requirement R1~~

~~The initial risk assessment required under Requirement R1 must be completed on or before the effective date of the standard. Subsequent risk assessments are to be performed at least once every 30 or 60 months depending on the results of the previous risk assessment per Requirement R1, Part 1.1. In performing the risk assessment under Requirement R1, the~~

Transmission Owner should first identify their population of Transmission stations and Transmission substations that meet the criteria contained in Applicability Section 4.1.1. Requirement R1 then requires the Transmission Owner to perform a risk assessment, consisting of a transmission analysis, to determine which of those Transmission stations and Transmission Substations if rendered inoperable or damaged could result in instability, uncontrolled separation, or Cascading within an Interconnection. The requirement is not to require identification of, and thus, not intended to bring within the scope of the standard a Transmission station or Transmission substation unless the applicable Transmission Owner determines through technical studies and analyses based on objective analysis, technical expertise, operating experience and experienced judgment that the loss of such facility would have a critical impact on the operation of the Interconnection in the event the asset is rendered inoperable or damaged. In the November 20, 2014 Order, FERC reiterated that "only an instability that has a "critical impact on the operation of the interconnection" warrants finding that the facility causing the instability is critical under Requirement R1." The Transmission Owner may determine the criteria for critical impact by considering, among other criteria, any of the following:

- Criteria or methodology used by Transmission Planners or Planning Coordinators in TPL-001-4, Requirement R6
- NERC EOP-004-2 reporting criteria
- Area or magnitude of potential impact

The standard does not mandate the specific analytical method for performing the risk assessment. The Transmission Owner has the discretion to choose the specific method that best suites its needs. As an example, an entity may perform a Power Flow analysis and stability analysis at a variety of load levels.

Performing Risk Assessments

The Transmission Owner has the discretion to select a transmission analysis method that fits its facts and system circumstances. To mandate a specific approach is not technically desirable and may lead to results that fail to adequately consider regional, topological, and system circumstances. The following guidance is only an example on how a Transmission Owner may perform a power flow and/or stability analysis to identify those Transmission stations and Transmission substations that if rendered inoperable or damaged as a result of a physical attack could result in instability, uncontrolled separation, or Cascading within an Interconnection. An entity could remove all lines, without regard to the voltage level, to a single Transmission station or Transmission substation and review the simulation results to assess system behavior to determine if Cascading of Transmission Facilities, uncontrolled separation, or voltage or frequency instability is likely to occur over a significant area of the Interconnection. Using engineering judgment, the Transmission Owner (possibly in consultation with regional planning or operation committees and/or ISO/RTO committee input) should develop criteria (e.g. imposing a fault near the removed Transmission station or Transmission substation) to identify a contingency or parameters that result in potential instability, uncontrolled separation, or Cascading within an Interconnection. Regional consultation on these matters is likely to be

~~helpful and informative, given that the inputs for the risk assessment and the attributes of what constitutes instability, uncontrolled separation, or Cascading within an Interconnection will likely vary from region-to-region or from ISO-to-ISO based on topology, system characteristics, and system configurations. Criteria could also include post-contingency facilities loadings above a certain emergency rating or failure of a power flow case to converge. Available special protection systems (SPS), if any, could be applied to determine if the system experiences any additional instability which may result in uncontrolled separation. Example criteria may include:~~

~~(a) Thermal overloads beyond facility emergency ratings;~~

~~(b) Voltage deviation exceeding ± 10%; or~~

~~(c) Cascading outage/voltage collapse; or~~

~~(d) Frequency below under-frequency load shed points~~

~~Periodicity~~

~~A Transmission Owner who identifies one or more Transmission stations or Transmission substations (as verified under Requirement R2) that if rendered inoperable or damaged could result in instability, uncontrolled separation, or Cascading within an Interconnection is required to conduct a risk assessment at least once every 30 months. This period ensures that the risk assessment remains current with projected conditions and configurations in the planned system. This risk assessment, as the initial assessment, must consider applicable planned Transmission stations and Transmission substations to be in service within 24 months. The 30 month timeframe aligns with the 24 month planned to be in service date because the Transmission Owner is provided the flexibility, depending on its planning cycle and the frequency in which it may plan to construct a new Transmission station or Transmission substation to more closely align these dates. The requirement is to conduct the risk assessment at least once every 30 months, so for a Transmission Owner that believes it is better to conduct a risk assessment once every 24 months, because of its planning cycle, it has the flexibility to do so.~~

~~Transmission Owners that have not identified any Transmission stations or Transmission substations (as verified under Requirement R2) that if rendered inoperable or damaged could result in instability, uncontrolled separation, or Cascading within an Interconnection are unlikely to see changes to their risk assessment in the Near-Term Planning Horizon. Consequently, a 60 month periodicity for completing a subsequent risk assessment is specified.~~

~~Identification of Primary Control Centers~~

~~After completing the risk assessment specified in Requirement R1, it is important to additionally identify the primary control center that operationally controls each Transmission station or Transmission substation that if rendered inoperable or damaged could result in instability, uncontrolled separation, or Cascading within an Interconnection. A primary control center~~

~~"operationally controls" a Transmission station or Transmission substation when the control center's electronic actions can cause direct physical actions at the identified Transmission station and Transmission substation, such as opening a breaker.~~

~~Requirement R2~~

~~This requirement specifies verification of the risk assessment performed under Requirement R1 by an entity other than the owner or operator of the Requirement R1 risk assessment.~~

~~A verification of the risk assessment by an unaffiliated third party, as specified in Requirement R2, could consist of:~~

~~1. Certifying that the Requirement R1 risk assessment considers the Transmission stations and Transmission substations identified in Applicability Section 4.1.1.~~

~~2. Review of the model used to conduct the risk assessment to ensure it contains sufficient system topology to identify Transmission stations and Transmission substations that if rendered inoperable or damaged could cause instability, uncontrolled separation, or Cascading within an Interconnection.~~

~~3. Review of the Requirement R1 risk assessment methodology.~~

~~This requirement provides the flexibility for a Transmission Owner to select from unaffiliated registered and non-registered entities with transmission planning or analysis experience to perform the verification of the Requirement R1 risk assessment. The term unaffiliated means that the selected verifying entity cannot be a corporate affiliate (*i.e.*, the verifying or third party reviewer cannot be an entity that corporately controls, is controlled by or is under common control with, the Transmission Owner). The verifying entity also cannot be a division of the Transmission Owner that operates as a functional unit.~~

~~The prohibition on registered entities using a corporate affiliate to conduct the verification, however, does not prohibit a governmental entity (e.g., a city, a municipality, a U.S. federal power marketing agency, or any other political subdivision of U.S. or Canadian federal, state, or provincial governments) from selecting as the verifying entity another governmental entity within the same political subdivision. For instance, a U.S. federal power marketing agency may select as its verifier another U.S. federal agency to conduct its verification so long as the selected entity has transmission planning or analysis experience. Similarly, a Transmission Owner owned by a Canadian province can use a separate agency of that province to perform the verification. The verifying entity, however, must still be a third party and cannot be a division of the registered entity that operates as a functional unit.~~

~~Requirement R2 also provides that the "verification may occur concurrent with or after the risk assessment performed under Requirement R1." This provision is designed to provide the Transmission Owner the flexibility to work with the verifying entity throughout (*i.e.*, concurrent with) the risk assessment, which for some Transmission Owners may be more efficient and effective. In other words, a Transmission Owner could collaborate with their unaffiliated verifying entity to perform the risk assessment under Requirement R1 such that both Requirement R1 and Requirement R2 are satisfied concurrently. The intent of Requirement R2~~

~~is to have an entity other than the owner or operator of the facility to be involved in the risk assessment process and have an opportunity to provide input. Accordingly, Requirement R2 is designed to allow entities the discretion to have a two-step process, where the Transmission Owner performs the risk assessment and subsequently has a third-party review that assessment, or a one-step process, where the entity collaborates with a third party to perform the risk assessment.~~

~~Characteristics to consider in selecting a third party reviewer could include:~~

- ~~Registered Entity with applicable planning and reliability functions.~~
- ~~Experience in power system studies and planning.~~
- ~~The entity's understanding of the MOD standards, TPL standards, and facility ratings as they pertain to planning studies.~~
- ~~The entity's familiarity with the Interconnection within which the Transmission Owner is located.~~

~~With respect to the requirement that Transmission owners develop and implement procedures for protecting confidential and sensitive information, the Transmission Owner could have a method for identifying documents that require confidential treatment. One mechanism for protecting confidential or sensitive information is to prohibit removal of sensitive or confidential information from the Transmission Owner's site. Transmission Owners could include such a prohibition in a non-disclosure agreement with the verifying entity.~~

~~A Technical feasibility study is not required in the Requirement R2 documentation of the technical basis for not modifying the identification in accordance with the recommendation.~~

~~On the issue of the difference between a verifier in Requirement R2 and a reviewer in Requirement R6, the SDT indicates that the verifier will confirm that the risk assessment was completed in accordance with Requirement R1, including the number of Transmission stations and substations identified, while the reviewer in Requirement R6 is providing expertise on the manner in which the evaluation of threats was conducted in accordance with Requirement R4, and the physical security plan in accordance with Requirement R5. In the latter situation there is no verification of a technical analysis, rather an application of experience and expertise to provide guidance or recommendations, if needed.~~

~~Parts 2.4 and 6.4 require the entities to have procedures to protect the confidentiality of sensitive or confidential information. Those procedures may include the following elements:~~

1. ~~Control and retention of information on site for third-party verifiers/reviewers.~~
2. ~~Only "need to know" employees, etc., get the information.~~
3. ~~Marking documents as confidential~~
4. ~~Securely storing and destroying information when no longer needed.~~
5. ~~Not releasing information outside the entity without, for example, General Counsel sign-off.~~

Requirement R3

Some Transmission Operators will have obligations under this standard for certain primary control centers. Those obligations, however, are contingent upon a Transmission Owner first completing the risk assessment specified by Requirement R1 and the verification specified by Requirement R2. Requirement R3 is intended to ensure that a Transmission Operator that has operational control of a primary control center identified in Requirement R1 receive notice so that the Transmission Operator may fulfill the rest of the obligations required in Requirements R4 through R6. Since the timing obligations in Requirements R4 through R6 are based upon completion of Requirement R2, the Transmission Owner must also include within the notice the date of completion of Requirement R2. Similarly, the Transmission Owner must notify the Transmission Operator of any removals from identification that result from a subsequent risk assessment under Requirement R1 or as a result of the verification process under Requirement R2.

Requirement R4

This requirement requires owners and operators of facilities identified by the Requirement R1 risk assessment and that are verified under Requirement R2 to conduct an assessment of potential threats and vulnerabilities to those Transmission stations, Transmission substations, and primary control centers using a tailored evaluation process. Threats and vulnerabilities may vary from facility to facility based on any number of factors that include, but are not limited to, location, size, function, existing physical security protections, and attractiveness as a target.

In order to effectively conduct a threat and vulnerability assessment, the asset owner may be the best source to determine specific site vulnerabilities, but current and evolving threats may best be determined by others in the intelligence or law enforcement communities. A number of resources have been identified in the standard, but many others exist and asset owners are not limited to where they may turn for assistance. Additional resources may include state or local fusion centers, U.S. Department of Homeland Security, Federal Bureau of Investigations (FBI), Public Safety Canada, Royal Canadian Mounted Police, and InfraGard chapters coordinated by the FBI.

The Responsible Entity is required to take a number of factors into account in Parts 4.1 to 4.3 in order to make a risk-based evaluation under Requirement R4.

To assist in determining the current threat for a facility, the prior history of attacks on similarly protected facilities should be considered when assessing probability and likelihood of occurrence at the facility in question.

Resources that may be useful in conducting threat and vulnerability assessments include:

- NERC Security Guideline for the Electricity Sector: Physical Security.
- NERC Security Guideline: Physical Security Response.
- ASIS International General Risk Assessment Guidelines.
- ASIS International Facilities Physical Security Measure Guideline.

- ASIS International Security Management Standard: Physical Asset Protection.
- Whole Building Design Guide - Threat/Vulnerability Assessments.

Requirement R5

This requirement specifies development and implementation of a security plan(s) designed to protect against attacks to the facilities identified in Requirement R1 based on the assessment performed under Requirement R4.

Requirement R5 specifies the following attributes for the physical security plan:

- *Resiliency or security measures designed collectively to deter, detect, delay, assess, communicate, and respond to potential physical threats and vulnerabilities identified during the evaluation conducted in Requirement R4.*

Resiliency may include, among other things:

a. System topology changes,

b. Spare equipment,

c. Construction of a new Transmission station or Transmission substation.

While most security measures will work together to collectively harden the entire site, some may be allocated to protect specific critical components. For example, if protection from gunfire is considered necessary, the entity may only install ballistic protection for critical components, not the entire site.

- *Law enforcement contact and coordination information.*

Examples of such information may be posting 9-1-1 for emergency calls and providing substation safety and familiarization training for local and federal law enforcement, fire department, and Emergency Medical Services.

- *A timeline for executing the physical security enhancements and modifications specified in the physical security plan.*

Entities have the flexibility to prioritize the implementation of the various resiliency or security enhancements and modifications in their security plan according to risk, resources, or other factors. The requirement to include a timeline in the physical security plan for executing the actual physical security enhancements and modifications does not also require that the enhancements and modifications be completed within 120 days. The actual timeline may extend beyond the 120 days, depending on the amount of work to be completed.

- *Provisions to evaluate evolving physical threats, and their corresponding security measures, to the Transmission station(s), Transmission substation(s), or primary control center(s).*

A registered entity's physical security plan should include processes and responsibilities for obtaining and handling alerts, intelligence, and threat warnings from various sources. Some of these sources could include the ERO, ES-ISAC, and US and/or Canadian federal agencies. This

information should be used to reevaluate or consider changes in the security plan and corresponding security measures of the security plan found in R5.

Incremental changes made to the physical security plan prior to the next required third party review do not require additional third party reviews.

Requirement R6

This requirement specifies review by an entity other than the Transmission Owner or Transmission Operator with appropriate expertise for the evaluation performed according to Requirement R4 and the security plan(s) developed according to Requirement R5. As with Requirement R2, the term unaffiliated means that the selected third party reviewer cannot be a corporate affiliate (*i.e.,* the third party reviewer cannot be an entity that corporately controls, is controlled by or is under common control with, the Transmission Operator). A third party reviewer also cannot be a division of the Transmission Operator that operates as a functional unit.

As noted in the guidance for Requirement R2, the prohibition on registered entities using a corporate affiliate to conduct the review, however, does not prohibit a governmental entity from selecting as the third party reviewer another governmental entity within the same political subdivision. For instance, a city or municipality may use its local enforcement agency, so long as the local law enforcement agency satisfies the criteria in Requirement R6. The third party reviewer, however, must still be a third party and cannot be a division of the registered entity that operates as a functional unit.

The Responsible Entity can select from several possible entities to perform the review:

- *An entity or organization with electric industry physical security experience and whose review staff has at least one member who holds either a Certified Protection Professional (CPP) or Physical Security Professional (PSP) certification.*

  In selecting CPP and PSP for use in this standard, the SDT believed it was important that if a private entity such as a consulting or security firm was engaged to conduct the third party review, they must tangibly demonstrate competence to conduct the review. This includes electric industry physical security experience and either of the premier security industry certifications sponsored by ASIS International. The ASIS certification program was initiated in 1977, and those that hold the CPP certification are board certified in security management. Those that hold the PSP certification are board certified in physical security.

- *An entity or organization approved by the ERO.*

- *A governmental agency with physical security expertise.*

- *An entity or organization with demonstrated law enforcement, government, or military physical security expertise.*

As with the verification under Requirement R2, Requirement R6 provides that the "review may occur concurrently with or after completion of the evaluation performed under Requirement R4 and the security plan development under Requirement R5." This provision is designed to

~~provide applicable Transmission Owners and Transmission Operators the flexibility to work with the third party reviewer throughout (*i.e.*, concurrent with) the evaluation performed according to Requirement R4 and the security plan(s) developed according to Requirement R5, which for some Responsible Entities may be more efficient and effective. In other words, a Transmission Owner or Transmission Operator could collaborate with their unaffiliated third party reviewer to perform an evaluation of potential threats and vulnerabilities (Requirement R4) and develop a security plan (Requirement R5) to satisfy Requirements R4 through R6 simultaneously. The intent of Requirement R6 is to have an entity other than the owner or operator of the facility to be involved in the Requirement R4 evaluation and the development of the Requirement R5 security plans and have an opportunity to provide input on the evaluation and the security plan. Accordingly, Requirement R6 is designed to allow entities the discretion to have a two-step process, where the Transmission Owner performs the evaluation and develops the security plan itself and then has a third party review that assessment, or a one-step process, where the entity collaborates with a third party to perform the evaluation and develop the security plan.~~

~~Timeline~~

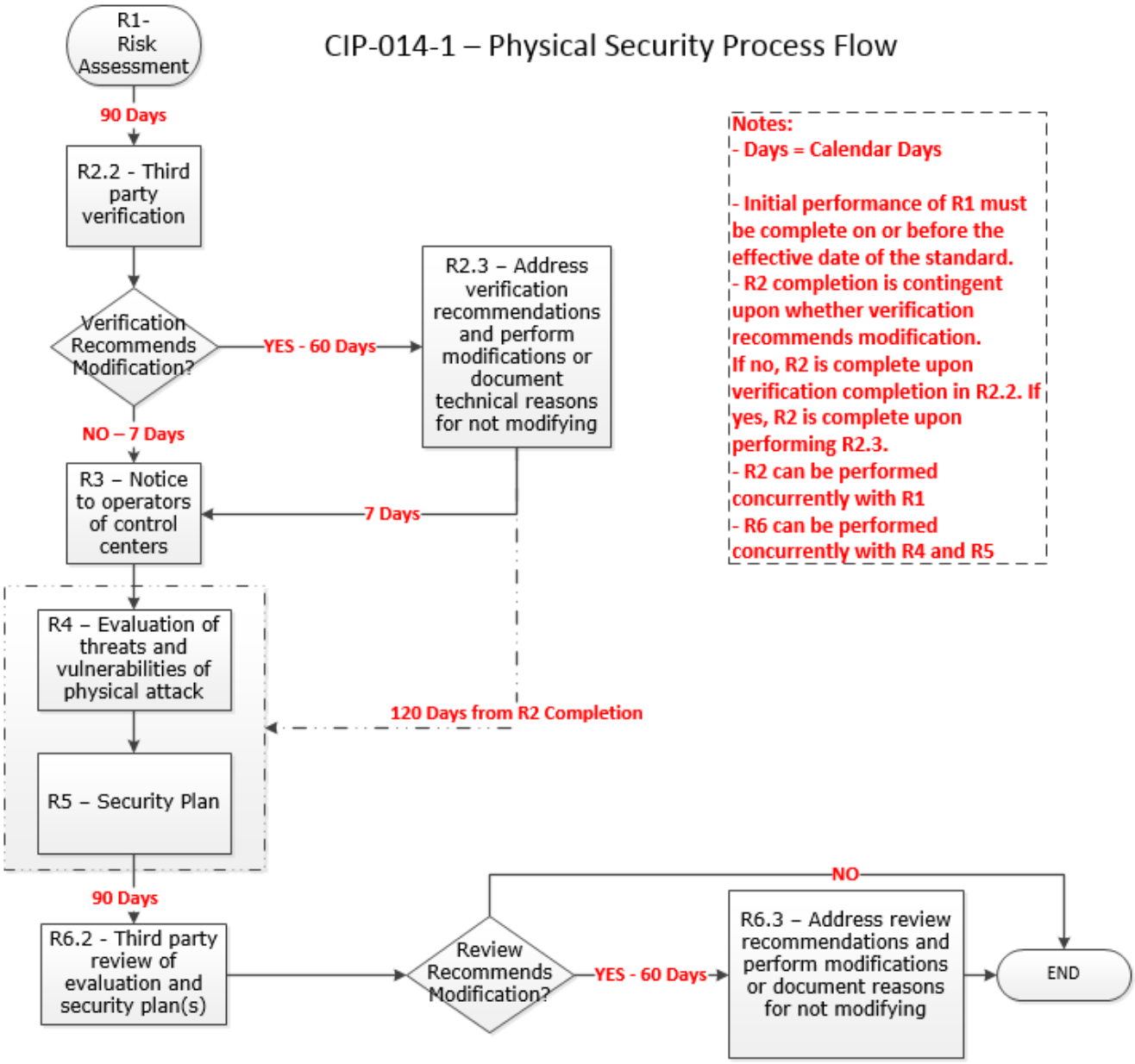
CIP-014-1 – Physical Security Process Flow
R1- Risk Assessment
90 Days
R2.2 - Third party verification
Verification Recommends Modification?
YES - 60 Days
R2.3 – Address verification recommendations and perform modifications or document technical reasons for not modifying
NO – 7 Days
R3 – Notice to operators of control centers
7 Days
R4 – Evaluation of threats and vulnerabilities of physical attack
120 Days from R2 Completion
R5 – Security Plan
90 Days
R6.2 - Third party review of evaluation and security plan(s)
Review Recommends Modification?
YES - 60 Days
NO
R6.3 – Address review recommendations and perform modifications or document reasons for not modifying
END
Notes:
- Days = Calendar Days
- Initial performance of R1 must be complete on or before the effective date of the standard.
- R2 completion is contingent upon whether verification recommends modification. If no, R2 is complete upon verification completion in R2.2. If yes, R2 is complete upon performing R2.3.
- R2 can be performed concurrently with R1
- R6 can be performed concurrently with R4 and R5

Rationale

During development of this standard, text boxes were embedded within the standard to explain the rationale for various parts of the standard. Upon BOT approval, the text from the rationale text boxes was moved to this section.

Rationale for Requirement R1:

This requirement meets the FERC directive from paragraph 6 of its March 7, 2014 order on physical security to perform a risk assessment to identify which facilities if rendered inoperable or damaged could impact an Interconnection through instability, uncontrolled separation, or cascading failures. The requirement is not intended to bring within the scope of the standard a Transmission station or Transmission substation unless the applicable Transmission Owner determines through technical studies and analyses based on objective analysis, technical expertise, operating experience and experienced judgment that the loss of such facility would have a critical impact on the operation of the Interconnection in the event the asset is rendered inoperable or damaged. In the November 20, 2014 Order, FERC reiterated that "only an instability that has a "critical impact on the operation of the interconnection" warrants finding that the facility causing the instability is critical under Requirement R1." The Transmission Owner may determine the criteria for critical impact by considering, among other criteria, any of the following:

- Criteria or methodology used by Transmission Planners or Planning Coordinators in TPL-001-4, Requirement R6
- NERC EOP-004-2 reporting criteria
- Area or magnitude of potential impact

Requirement R1 also meets the FERC directive for periodic reevaluation of the risk assessment by requiring the risk assessment to be performed every 30 months (or 60 months for an entity that has not identified in a previous risk assessment any Transmission stations or Transmission substations that if rendered inoperable or damaged could result in instability, uncontrolled separation, or Cascading within an Interconnection).

After identifying each Transmission station and Transmission substation that meets the criteria in Requirement R1, it is important to additionally identify the primary control center that operationally controls that Transmission station or Transmission substation (*i.e.*, the control center whose electronic actions can cause direct physical actions at the identified Transmission station and Transmission substation, such as opening a breaker, compared to a control center that only has the ability to monitor the Transmission station and Transmission substation and, therefore, must coordinate direct physical action through another entity).

Rationale for Requirement R2:

This requirement meets the FERC directive from paragraph 11 in the order on physical security requiring verification by an entity other than the owner or operator of the risk assessment performed under Requirement R1.

This requirement provides the flexibility for a Transmission Owner to select registered and non-registered entities with transmission planning or analysis experience to perform the verification of the Requirement R1 risk assessment. The term "unaffiliated" means that the selected verifying entity cannot be a corporate affiliate (*i.e.*, the verifying entity cannot be an entity that controls, is controlled by, or is under common control with, the Transmission owner). The verifying entity also cannot be a division of the Transmission Owner that operates as a functional unit. The term "unaffiliated" is not intended to prohibit a governmental entity from using another government entity to be a verifier under Requirement R2.

Requirement R2 also provides the Transmission Owner the flexibility to work with the verifying entity throughout the Requirement R1 risk assessment, which for some Transmission Owners may be more efficient and effective. In other words, a Transmission Owner could coordinate with their unaffiliated verifying entity to perform a Requirement R1 risk assessment to satisfy both Requirement R1 and Requirement R2 concurrently.

Planning Coordinator is a functional entity listed in Part 2.1. The Planning Coordinator and Planning Authority are the same entity as shown in the NERC Glossary of Terms Used in NERC Reliability Standards.

Rationale for Requirement R3:

Some Transmission Operators will have obligations under this standard for certain primary control centers. Those obligations, however, are contingent upon a Transmission Owner first identifying which Transmission stations and Transmission substations meet the criteria specified by Requirement R1, as verified according to Requirement R2. This requirement is intended to ensure that a Transmission Operator that has operational control of a primary control center identified in Requirement R1, Part 1.2 of a Transmission station or Transmission substation verified according to Requirement R2 receives notice of such identification so that the Transmission Operator may timely fulfill its resulting obligations under Requirements R4 through R6. Since the timing obligations in Requirements R4 through R6 are based upon completion of Requirement R2, the Transmission Owner must also include notice of the date of completion of Requirement R2. Similarly, the Transmission Owner must notify the Transmission Operator of any removals from identification that result from a subsequent risk assessment under Requirement R1 or the verification process under Requirement R2.

Rationale for Requirement R4:

This requirement meets the FERC directive from paragraph 8 in the order on physical security that the reliability standard must require tailored evaluation of potential threats and vulnerabilities to facilities identified in Requirement R1 and verified according to Requirement R2. Threats and vulnerabilities may vary from facility to facility based on factors such as the facility's location, size, function, existing protections, and attractiveness of the target. As such, the requirement does not mandate a one-size-fits-all approach but requires entities to account for the unique characteristics of their facilities.

~~Requirement R4 does not explicitly state when the evaluation of threats and vulnerabilities must occur or be completed. However, Requirement R5 requires that the entity's security plan(s), which is dependent on the Requirement R4 evaluation, must be completed within 120 calendar days following completion of Requirement R2. Thus, an entity has the flexibility when to complete the Requirement R4 evaluation, provided that it is completed in time to comply with the requirement in Requirement R5 to develop a physical security plan 120 calendar days following completion of Requirement R2.~~

~~Rationale for Requirement R5:~~

~~This requirement meets the FERC directive from paragraph 9 in the order on physical security requiring the development and implementation of a security plan(s) designed to protect against attacks to the facilities identified in Requirement R1 based on the assessment performed under Requirement R4.~~

~~Rationale for Requirement R6:~~

~~This requirement meets the FERC directive from paragraph 11 in the order on physical security requiring review by an entity other than the owner or operator with appropriate expertise of the evaluation performed according to Requirement R4 and the security plan(s) developed according to Requirement R5.~~

~~As with the verification required by Requirement R2, Requirement R6 provides Transmission Owners and Transmission Operators the flexibility to work with the third party reviewer throughout the Requirement R4 evaluation and the development of the Requirement R5 security plan(s). This would allow entities to satisfy their obligations under Requirement R6 concurrent with the satisfaction of their obligations under Requirements R4 and R5.~~

NERC
NORTH AMERICAN ELECTRIC RELIABILITY CORPORATION

Implementation Plan

Project 2023-06 CIP-014 Risk Assessment Refinement
Reliability Standard CIP-014-4

Applicable Standard(s)

- CIP-014-4 Physical Security

Requested Retirement(s)

- CIP-014-3 Physical Security

Applicable Entities

- Transmission Owner (TO)
- Transmission Operator (TOP)

General Considerations

The Drafting Team has determined that 24 calendar months for the CIP-014-4 implementation plan would allow adequate time for Transmission Owners and Transmission Operators to determine applicability, develop criteria, write or revise methodologies, perform assessments, and procure unaffiliated third parties for risk assessment verification (which some Transmission Owners have performed concurrently with their risk assessment analyses).

Effective Date of CIP-014-4

Where approval by an Applicable Governmental Authority is required, Reliability Standard CIP-014-4 shall become effective on the first day of the first calendar quarter 24 calendar months after the effective date of the Applicable Governmental Authority's order approving the standard or as otherwise provided for by the Applicable Governmental Authority.

Where approval by an Applicable Governmental Authority is not required, Reliability Standard CIP-014-4 shall become effective the first day of the first calendar quarter 24 calendar months after the date the standard is adopted by the NERC Board of Trustees or as otherwise provided for in that jurisdiction.

Retirement Date

Reliability Standard CIP-014-3 shall be retired immediately prior to the effective date of Reliability Standard CIP-014 in the particular jurisdiction in which the revised standard is becoming effective.

NERC
NORTH AMERICAN ELECTRIC RELIABILITY CORPORATION

Violation Risk Factor and Violation Severity Level Justifications

Project 2023-06 CIP-014 Risk Assessment Refinement (CIP-014-4)

This document provides the standard drafting team's (SDT's) justification for assignment of violation risk factors (VRFs) and violation severity levels (VSLs) for each requirement in CIP-014-4. Each requirement is assigned a VRF and a VSL. These elements support the determination of an initial value range for the Base Penalty Amount regarding violations of requirements in FERC-approved Reliability Standards, as defined in the Electric Reliability Organizations (ERO) Sanction Guidelines. The SDT applied the following NERC criteria and FERC Guidelines when developing the VRFs and VSLs for the requirements.

NERC Criteria for Violation Risk Factors

High Risk Requirement

A requirement that, if violated, could directly cause or contribute to Bulk Electric System instability, separation, or a cascading sequence of failures, or could place the Bulk Electric System at an unacceptable risk of instability, separation, or cascading failures; or, a requirement in a planning time frame that, if violated, could, under emergency, abnormal, or restorative conditions anticipated by the preparations, directly cause or contribute to Bulk Electric System instability, separation, or a cascading sequence of failures, or could place the Bulk Electric System at an unacceptable risk of instability, separation, or cascading failures, or could hinder restoration to a normal condition.

Medium Risk Requirement

A requirement that, if violated, could directly affect the electrical state or the capability of the Bulk Electric System, or the ability to effectively monitor and control the Bulk Electric System. However, violation of a medium risk requirement is unlikely to lead to Bulk Electric System instability, separation, or cascading failures; or, a requirement in a planning time frame that, if violated, could, under emergency, abnormal, or restorative conditions anticipated by the preparations, directly and adversely affect the electrical state or capability of the Bulk Electric System, or the ability to effectively monitor, control, or restore the Bulk Electric System. However, violation of a medium risk requirement is unlikely, under emergency, abnormal, or restoration conditions anticipated by the preparations, to lead to Bulk Electric System instability, separation, or cascading failures, nor to hinder restoration to a normal condition.

Lower Risk Requirement
A requirement that is administrative in nature and a requirement that, if violated, would not be expected to adversely affect the electrical state or capability of the Bulk Electric System, or the ability to effectively monitor and control the Bulk Electric System; or, a requirement that is administrative in nature and a requirement in a planning time frame that, if violated, would not, under the emergency, abnormal, or restorative conditions anticipated by the preparations, be expected to adversely affect the electrical state or capability of the Bulk Electric System, or the ability to effectively monitor, control, or restore the Bulk Electric System.

FERC Guidelines for Violation Risk Factors

Guideline (1) – Consistency with the Conclusions of the Final Blackout Report

FERC seeks to ensure that VRFs assigned to Requirements of Reliability Standards in these identified areas appropriately reflect their historical critical impact on the reliability of the Bulk-Power System. In the VSL Order, FERC listed critical areas (from the Final Blackout Report) where violations could severely affect the reliability of the Bulk-Power System:

- Emergency operations
- Vegetation management
- Operator personnel training
- Protection systems and their coordination
- Operating tools and backup facilities
- Reactive power and voltage control
- System modeling and data exchange
- Communication protocol and facilities
- Requirements to determine equipment ratings
- Synchronized data recorders
- Clearer criteria for operationally critical facilities
- Appropriate use of transmission loading relief.

Guideline (2) – Consistency within a Reliability Standard
FERC expects a rational connection between the sub-Requirement VRF assignments and the main Requirement VRF assignment.

Guideline (3) – Consistency among Reliability Standards
FERC expects the assignment of VRFs corresponding to Requirements that address similar reliability goals in different Reliability Standards would be treated comparably.

Guideline (4) – Consistency with NERC's Definition of the Violation Risk Factor Level
Guideline (4) was developed to evaluate whether the assignment of a particular VRF level conforms to NERC's definition of that risk level.

Guideline (5) – Treatment of Requirements that Co-mingle More Than One Obligation
Where a single Requirement co-mingles a higher risk reliability objective and a lesser risk reliability objective, the VRF assignment for such Requirements must not be watered down to reflect the lower risk level associated with the less important objective of the Reliability Standard.

NERC Criteria for Violation Severity Levels

VSLs define the degree to which compliance with a requirement was not achieved. Each requirement must have at least one VSL. While it is preferable to have four VSLs for each requirement, some requirements do not have multiple "degrees" of noncompliant performance and may have only one, two, or three VSLs.

VSLs should be based on NERC's overarching criteria shown in the table below:

Lower VSL	Moderate VSL	High VSL	Severe VSL
The performance or product measured almost meets the full intent of the requirement.	The performance or product measured meets the majority of the intent of the requirement.	The performance or product measured does not meet the majority of the intent of the requirement, but does meet some of the intent.	The performance or product measured does not substantively meet the intent of the requirement.

FERC Order of Violation Severity Levels

The FERC VSL guidelines are presented below, followed by an analysis of whether the VSLs proposed for each requirement in the standard meet the FERC Guidelines for assessing VSLs:

Guideline (1) – Violation Severity Level Assignments Should Not Have the Unintended Consequence of Lowering the Current Level of Compliance

Compare the VSLs to any prior levels of non-compliance and avoid significant changes that may encourage a lower level of compliance than was required when levels of non-compliance were used.

Guideline (2) – Violation Severity Level Assignments Should Ensure Uniformity and Consistency in the Determination of Penalties

A violation of a "binary" type requirement must be a "Severe" VSL.
Do not use ambiguous terms such as "minor" and "significant" to describe noncompliant performance.

Guideline (3) – Violation Severity Level Assignment Should Be Consistent with the Corresponding Requirement

VSLs should not expand on what is required in the requirement.

Guideline (4) – Violation Severity Level Assignment Should Be Based on a Single Violation, Not on a Cumulative Number of Violations

Unless otherwise stated in the requirement, each instance of non-compliance with a requirement is a separate violation. Section 4 of the Sanction Guidelines states that assessing penalties on a per violation per day basis is the "default" for penalty calculations.

VRF Justification for CIP-014-4, Requirement R1

The VRF did not change from the previously FERC approved CIP-014-3 Reliability Standard.

VSLs for CIP-014-4, Requirement R1			
Lower	**Moderate**	**High**	**Severe**
The Transmission Owner identified a list of applicable Transmission station(s) or Transmission substation(s) per Attachment 1, but did so after 36 calendar months, but less than or equal to 38 calendar months. OR The Transmission Owner identified a list of applicable substations, but failed to identify less than or equal to 10% of the applicable Transmission station(s) or Transmission substation(s) per Attachment 1.	The Transmission Owner identified a list of applicable Transmission station(s) or Transmission substation(s) per Attachment 1, but did so after 38 calendar months, but less than or equal to 40 calendar months. OR The Transmission Owner identified a list of applicable substations, but failed to identify more than 10% and less than or equal to 20% of the applicable Transmission station(s) or Transmission substation(s) per Attachment 1.	The Transmission Owner identified a list of applicable Transmission station(s) or Transmission substation(s) per Attachment 1, but did so after 40 calendar months, but less than or equal to 42 calendar months. OR The Transmission Owner identified a list of applicable substations, but failed to identify more than 20% and less than or equal to 30% of the applicable Transmission station(s) or Transmission substation(s) per Attachment 1. The Transmission Owner had insufficient documented criteria for determining when	The Transmission Owner failed to identify a list of applicable Transmission station(s) or Transmission substation(s) per Attachment 1. OR The Transmission Owner identified a list of applicable Transmission station(s) or Transmission substation(s) per Attachment 1, but did so after more than 42 calendar months. OR The Transmission Owner identified a list of applicable substations, but failed to identify more than 30% of the applicable Transmission station(s) or Transmission substation(s) per

		Transmission station(s) or Transmission substation(s) were in proximity for those identified in Requirement R1. OR The Transmission Owner failed to use the documented criteria to identify all Transmission station(s) or Transmission substation(s) in proximity.	Attachment 1. The Transmission Owner did not have documented criteria to determine when Transmission station(s) or Transmission substation(s) were in proximity for those identified in Requirement R1. OR The Transmission Owner failed to use the documented criteria to identify which Transmission station(s) or Transmission substation(s) in proximity.

VSL Justifications for CIP-014-4, Requirement R1	
FERC VSL G1 Violation Severity Level Assignments Should Not Have the Unintended Consequence of Lowering the Current Level of Compliance	The requirement is a part of CIP-014-3 Requirement R1. Therefore, the proposed VSLs do not have the unintended consequence of lowering the level of compliance.
FERC VSL G2 Violation Severity Level Assignments Should Ensure Uniformity and Consistency in the Determination of Penalties Guideline 2a: The Single Violation Severity Level Assignment Category for "Binary" Requirements Is Not	The proposed VSLs are not binary and do not use any ambiguous terminology, thereby supporting uniformity and consistency in the determination of similar penalties for similar violations.

VSL Justifications for CIP-014-4, Requirement R1	
Consistent Guideline 2b: Violation Severity Level Assignments that Contain Ambiguous Language	
FERC VSL G3 Violation Severity Level Assignment Should Be Consistent with the Corresponding Requirement	The proposed VSLs use the same terminology as used in the associated requirement and are, therefore, consistent with the requirement.
FERC VSL G4 Violation Severity Level Assignment Should Be Based on A Single Violation, Not on A Cumulative Number of Violations	Each VSL is based on a single violation and not cumulative violations.

VRF Justifications for CIP-014-4, Requirement R2	
Proposed VRF	**Lower**
NERC VRF Discussion	This Requirement is a part of CIP-014-3 Requirement R1. After breaking down to five (5) different Requirements, it does not serve as High VRF since new Requirement R1 remains as High VRF.
FERC VRF G1 Discussion Guideline 1- Consistency with Blackout Report	This VRF is consistent with the identified areas from the FERC list of critical areas in the Final Blackout Report.
FERC VRF G2 Discussion Guideline 2- Consistency within a Reliability Standard	The VRF for Requirement R2 is consistent with those connections between the sub-Requirement VRF assignments and the main Requirement VRF assignment.

VRF Justifications for CIP-014-4, Requirement R2	
Proposed VRF	**Lower**
FERC VRF G3 Discussion Guideline 3- Consistency among Reliability Standards	This VRF is consistent with other VRFs that address similar reliability goals in different Reliability Standards.
FERC VRF G4 Discussion Guideline 4- Consistency with NERC Definitions of VRFs	This VRF is consistent with the definition of a lower VRF requirement per the criteria filed with FERC as part of the ERO's Sanctions Guidelines.
FERC VRF G5 Discussion Guideline 5- Treatment of Requirements that Co-mingle More than One Obligation	This requirement does not mingle a higher risk reliability objective and a lesser risk reliability objective. Therefore, the VRF reflects the risk of the whole requirement.

VSLs for CIP-014-4, Requirement R2			
Lower	**Moderate**	**High**	**Severe**
		The Transmission Owner had insufficient documented criteria for determining when Transmission station(s) or Transmission substation(s) were in proximity for those identified in Requirement R1. OR The Transmission Owner failed to use the documented criteria to identify all Transmission	The Transmission Owner did not have documented criteria to determine when Transmission station(s) or Transmission substation(s) were in proximity for those identified in Requirement R1. OR The Transmission Owner failed to use the documented criteria to identify which Transmission

		station(s) or Transmission substation(s) in proximity.	station(s) or Transmission substation(s) in proximity.

VSL Justifications for CIP-014-4, Requirement R2	
FERC VSL G1 Violation Severity Level Assignments Should Not Have the Unintended Consequence of Lowering the Current Level of Compliance	This Requirement is a part of CIP-014-3 Requirement R1. After breaking down to five (5) different Requirements, it does not serve as High VSL since new Requirement R1 remains as High VSL.
FERC VSL G2 Violation Severity Level Assignments Should Ensure Uniformity and Consistency in the Determination of Penalties Guideline 2a: The Single Violation Severity Level Assignment Category for "Binary" Requirements Is Not Consistent Guideline 2b: Violation Severity Level Assignments that Contain Ambiguous Language	The proposed VSLs are not binary and do not use any ambiguous terminology, thereby supporting uniformity and consistency in the determination of similar penalties for similar violations.
FERC VSL G3 Violation Severity Level Assignment Should Be Consistent with the Corresponding Requirement	The proposed VSLs use the same terminology as used in the associated requirement and are, therefore, consistent with the requirement.
FERC VSL G4 Violation Severity Level Assignment Should Be Based on A Single	Each VSL is based on a single violation and not cumulative violations.

VSL Justifications for CIP-014-4, Requirement R2	
Violation, Not on A Cumulative Number of Violations	

VRF Justifications for CIP-014-4, Requirement R3	
Proposed VRF	**Lower**
NERC VRF Discussion	This Requirement is a part of CIP-014-3 Requirement R1. After breaking down to five (5) different Requirements, it does not serve as High VRF since new Requirement R1 remains as High VRF.
FERC VRF G1 Discussion Guideline 1- Consistency with Blackout Report	This VRF is consistent with the identified areas from the FERC list of critical areas in the Final Blackout Report.
FERC VRF G2 Discussion Guideline 2- Consistency within a Reliability Standard	The VRF for Requirement R3 is consistent with those connections between the sub-Requirement VRF assignments and the main Requirement VRF assignment.
FERC VRF G3 Discussion Guideline 3- Consistency among Reliability Standards	This VRF is consistent with other VRFs that address similar reliability goals in different Reliability Standards.
FERC VRF G4 Discussion Guideline 4- Consistency with NERC Definitions of VRFs	This VRF is consistent with the definition of a lower VRF requirement per the criteria filed with FERC as part of the ERO's Sanctions Guidelines.
FERC VRF G5 Discussion Guideline 5- Treatment of Requirements that Co-mingle More than One Obligation	This requirement does not mingle a higher risk reliability objective and a lesser risk reliability objective. Therefore, the VRF reflects the risk of the whole requirement.

VSLs for CIP-014-4, Requirement R3			
Lower	**Moderate**	**High**	**Severe**
The Transmission Owner has a risk assessment methodology that failed to include one of the requirements listed in Requirement R3, Parts 3.1 through 3.6.	The Transmission Owner has a risk assessment methodology that failed to include two of the requirements listed in Requirement R3, Parts 3.1 through 3.6.	The Transmission Owner has a risk assessment methodology that failed to include three or more of the requirements listed in Requirement R3, Parts 3.1 through 3.6.	The Transmission Owner does not have a risk assessment methodology.

VSL Justifications for CIP-014-4, Requirement R3	
FERC VSL G1 Violation Severity Level Assignments Should Not Have the Unintended Consequence of Lowering the Current Level of Compliance	This Requirement is a part of CIP-014-3 Requirement R1. After breaking down to five (5) different Requirements, it does not serve as High VSL since new Requirement R1 remains as High VSL.
FERC VSL G2 Violation Severity Level Assignments Should Ensure Uniformity and Consistency in the Determination of Penalties Guideline 2a: The Single Violation Severity Level Assignment Category for "Binary" Requirements Is Not Consistent Guideline 2b: Violation Severity Level Assignments that Contain Ambiguous Language	The proposed VSLs are not binary and do not use any ambiguous terminology, thereby supporting uniformity and consistency in the determination of similar penalties for similar violations.

VSL Justifications for CIP-014-4, Requirement R3	
FERC VSL G3 Violation Severity Level Assignment Should Be Consistent with the Corresponding Requirement	The proposed VSLs use the same terminology as used in the associated requirement and are, therefore, consistent with the requirement.
FERC VSL G4 Violation Severity Level Assignment Should Be Based on A Single Violation, Not on A Cumulative Number of Violations	Each VSL is based on a single violation and not cumulative violations.

VRF Justifications for CIP-014-4, Requirement R4	
Proposed VRF	**Lower**
NERC VRF Discussion	This Requirement is a part of CIP-014-3 Requirement R1. After breaking down to five (5) different Requirements, it does not serve as High VRF since new Requirement R1 remains as High VRF.
FERC VRF G1 Discussion Guideline 1- Consistency with Blackout Report	This VRF is consistent with the identified areas from the FERC list of critical areas in the Final Blackout Report.
FERC VRF G2 Discussion Guideline 2- Consistency within a Reliability Standard	The VRF for Requirement R4 is consistent with those connections between the sub-Requirement VRF assignments and the main Requirement VRF assignment.
FERC VRF G3 Discussion Guideline 3- Consistency among Reliability Standards	This VRF is consistent with other VRFs that address similar reliability goals in different Reliability Standards.
FERC VRF G4 Discussion	This VRF is consistent with the definition of a lower VRF requirement per the criteria filed with FERC as part of the ERO's Sanctions Guidelines.

VRF Justifications for CIP-014-4, Requirement R4	
Proposed VRF	**Lower**
Guideline 4- Consistency with NERC Definitions of VRFs	
FERC VRF G5 Discussion Guideline 5- Treatment of Requirements that Co-mingle More than One Obligation	This requirement does not mingle a higher risk reliability objective and a lesser risk reliability objective. Therefore, the VRF reflects the risk of the whole requirement.

VSLs for CIP-014-4, Requirement R4			
Lower	**Moderate**	**High**	**Severe**
The Transmission Owner performed a risk assessment, but did so after 36 calendar months, but less than or equal to 38 calendar months. OR The Transmission Owner performed a risk assessment inconsistent with one of the methodology requirements listed in Requirement R3, Parts 3.1 through 3.6	The Transmission Owner performed a risk assessment, but did so after 38 calendar months, but less than or equal to 40 calendar months. OR The Transmission Owner performed a risk assessment inconsistent with two of the methodology requirements listed in Requirement R3, Parts 3.1 through 3.6. OR The Transmission Owner performed a risk assessment that was insufficient with	The Transmission Owner performed a risk assessment inconsistent with three or more of the methodology requirements listed in Requirement R3, Parts 3.1 through 3.6. OR The Transmission Owner performed a risk assessment, but failed to include the primary control center identified in Requirement R4, Part 4.3.	The Transmission Owner performed a risk assessment, but did so after more than 42 calendar months.

	respect to Requirement R4, Part 4.2.		

VSL Justifications for CIP-014-4, Requirement R4	
FERC VSL G1 Violation Severity Level Assignments Should Not Have the Unintended Consequence of Lowering the Current Level of Compliance	This Requirement is a part of CIP-014-3 Requirement R1. After breaking down to five (5) different Requirements, it does not serve as High VSL since new Requirement R1 remains as High VSL.
FERC VSL G2 Violation Severity Level Assignments Should Ensure Uniformity and Consistency in the Determination of Penalties Guideline 2a: The Single Violation Severity Level Assignment Category for "Binary" Requirements Is Not Consistent Guideline 2b: Violation Severity Level Assignments that Contain Ambiguous Language	The proposed VSLs are not binary and do not use any ambiguous terminology, thereby supporting uniformity and consistency in the determination of similar penalties for similar violations.
FERC VSL G3 Violation Severity Level Assignment Should Be Consistent with the Corresponding Requirement	The proposed VSLs use the same terminology as used in the associated requirement and are, therefore, consistent with the requirement.
FERC VSL G4 Violation Severity Level Assignment Should Be Based on A Single	Each VSL is based on a single violation and not cumulative violations.

VSL Justifications for CIP-014-4, Requirement R4	
Violation, Not on A Cumulative Number of Violations	

VRF Justifications for CIP-014-4, Requirement R5	
Proposed VRF	**Lower**
NERC VRF Discussion	This Requirement is a part of CIP-014-3 Requirement R1. After breaking down to five (5) different Requirements, it does not serve as High VRF since new Requirement R1 remains as High VRF.
FERC VRF G1 Discussion Guideline 1- Consistency with Blackout Report	This VRF is consistent with the identified areas from the FERC list of critical areas in the Final Blackout Report.
FERC VRF G2 Discussion Guideline 2- Consistency within a Reliability Standard	The VRF for Requirement R5 is consistent with those connections between the sub-Requirement VRF assignments and the main Requirement VRF assignment.
FERC VRF G3 Discussion Guideline 3- Consistency among Reliability Standards	This VRF is consistent with other VRFs that address similar reliability goals in different Reliability Standards.
FERC VRF G4 Discussion Guideline 4- Consistency with NERC Definitions of VRFs	This VRF is consistent with the definition of a lower VRF requirement per the criteria filed with FERC as part of the ERO's Sanctions Guidelines.
FERC VRF G5 Discussion Guideline 5- Treatment of Requirements that Co-mingle More than One Obligation	This requirement does not mingle a higher risk reliability objective and a lesser risk reliability objective. Therefore, the VRF reflects the risk of the whole requirement.

VSLs for CIP-014-4, Requirement R5			
Lower	**Moderate**	**High**	**Severe**
The Transmission Owner performed a risk assessment, but did so after 36 calendar months, but less than or equal to 38 calendar months. OR The Transmission Owner performed a risk assessment inconsistent with one of the methodology requirements listed in Requirement R3, Parts 3.1 through 3.6	The Transmission Owner performed a risk assessment, but did so after 38 calendar months, but less than or equal to 40 calendar months. OR The Transmission Owner performed a risk assessment inconsistent with two of the methodology requirements listed in Requirement R3, Parts 3.1 through 3.6. OR The Transmission Owner performed a risk assessment that was insufficient with respect to Requirement R4, Part 4.2.	The Transmission owner performed a risk assessment, but did so after 40 calendar months, but less than or equal to 42 calendar months. OR The Transmission Owner performed a risk assessment inconsistent with three or more of the methodology requirements listed in Requirement R3, Parts 3.1 through 3.6. OR The Transmission Owner performed a risk assessment, but failed to include the primary control center identified in Requirement R4, Part 4.3.	The Transmission Owner performed a risk assessment, but did so after more than 42 calendar months.

VSL Justifications for CIP-014-4, Requirement R5	
FERC VSL G1 Violation Severity Level Assignments Should Not Have the Unintended Consequence of Lowering the	This Requirement is a part of CIP-014-3 Requirement R1. After breaking down to five (5) different Requirements, it does not serve as High VSL since new Requirement R1 remains as High VSL.

VSL Justifications for CIP-014-4, Requirement R5	
Current Level of Compliance	
FERC VSL G2 Violation Severity Level Assignments Should Ensure Uniformity and Consistency in the Determination of Penalties Guideline 2a: The Single Violation Severity Level Assignment Category for "Binary" Requirements Is Not Consistent Guideline 2b: Violation Severity Level Assignments that Contain Ambiguous Language	The proposed VSLs are not binary and do not use any ambiguous terminology, thereby supporting uniformity and consistency in the determination of similar penalties for similar violations.
FERC VSL G3 Violation Severity Level Assignment Should Be Consistent with the Corresponding Requirement	The proposed VSLs use the same terminology as used in the associated requirement and are, therefore, consistent with the requirement.
FERC VSL G4 Violation Severity Level Assignment Should Be Based on A Single Violation, Not on A Cumulative Number of Violations	Each VSL is based on a single violation and not cumulative violations.

VRF Justifications for CIP-014-4, Requirement R6	
Proposed VRF	**Lower**
NERC VRF Discussion	This Requirement is Requirement R2 in CIP-014-3. The drafting team believes the VRF should be the same as

VRF Justifications for CIP-014-4, Requirement R6	
Proposed VRF	**Lower**
	Requirement R1 in CIP-014-3.
FERC VRF G1 Discussion Guideline 1- Consistency with Blackout Report	This VRF is consistent with the identified areas from the FERC list of critical areas in the Final Blackout Report.
FERC VRF G2 Discussion Guideline 2- Consistency within a Reliability Standard	The VRF for Requirement R6 is consistent with those connections between the sub-Requirement VRF assignments and the main Requirement VRF assignment.
FERC VRF G3 Discussion Guideline 3- Consistency among Reliability Standards	This VRF is consistent with other VRFs that address similar reliability goals in different Reliability Standards.
FERC VRF G4 Discussion Guideline 4- Consistency with NERC Definitions of VRFs	This VRF is consistent with the definition of a lower VRF requirement per the criteria filed with FERC as part of the ERO's Sanctions Guidelines.
FERC VRF G5 Discussion Guideline 5- Treatment of Requirements that Co-mingle More than One Obligation	This requirement does not mingle a higher risk reliability objective and a lesser risk reliability objective. Therefore, the VRF reflects the risk of the whole requirement.

VSL Justification for CIP-014-4, Requirement R6

The Requirement is the same as Requirement R2 in CIP-014-3. The VSL did not change from the previously FERC approved CIP-014-3 Reliability Standard.

VRF Justifications for CIP-014-4, Requirement R7	
Proposed VRF	**Lower**
NERC VRF Discussion	This Requirement is Requirement R3 in CIP-014-3. The drafting team believes the VRF should be higher, from Low to Medium.
FERC VRF G1 Discussion Guideline 1- Consistency with Blackout Report	This VRF is consistent with the identified areas from the FERC list of critical areas in the Final Blackout Report.
FERC VRF G2 Discussion Guideline 2- Consistency within a Reliability Standard	The VRF for Requirement R7 is consistent with those connections between the sub-Requirement VRF assignments and the main Requirement VRF assignment.
FERC VRF G3 Discussion Guideline 3- Consistency among Reliability Standards	This VRF is consistent with other VRFs that address similar reliability goals in different Reliability Standards.
FERC VRF G4 Discussion Guideline 4- Consistency with NERC Definitions of VRFs	This VRF is consistent with the definition of a lower VRF requirement per the criteria filed with FERC as part of the ERO's Sanctions Guidelines.
FERC VRF G5 Discussion Guideline 5- Treatment of Requirements that Co-mingle More than One Obligation	This requirement does not mingle a higher risk reliability objective and a lesser risk reliability objective. Therefore, the VRF reflects the risk of the whole requirement.

VSL Justification for CIP-014-4, Requirement R7

The Requirement is the same as Requirement R3 in CIP-014-3. The VSL did not change from the previously FERC approved CIP-014-3 Reliability Standard.

VRF Justification for CIP-014-4, Requirement R8

The Requirement is the same as Requirement R4 in CIP-014-3. The VRF did not change from the previously FERC approved CIP-014-3 Reliability Standard.

VSL Justification for CIP-014-4, Requirement R8

The Requirement is the same as Requirement R4 in CIP-014-3. The VSL did not change from the previously FERC approved CIP-014-3 Reliability Standard.

VRF Justification for CIP-014-4, Requirement R9

The Requirement is the same as Requirement R5 in CIP-014-3. The VRF did not change from the previously FERC approved CIP-014-3 Reliability Standard.

VSL Justification for CIP-014-4, Requirement R9

The Requirement is the same as Requirement R5 in CIP-014-3. The VSL did not change from the previously FERC approved CIP-014-3 Reliability Standard.

VRF Justification for CIP-014-4, Requirement R10

The Requirement is the same as Requirement R6 in CIP-014-3. The VRF did not change from the previously FERC approved CIP-014-3 Reliability Standard.

VSL Justification for CIP-014-4, Requirement R10

The Requirement is the same as Requirement R6 in CIP-014-3. The VSL did not change from the previously FERC approved CIP-014-3 Reliability Standard.

NERC
NORTH AMERICAN ELECTRIC RELIABILITY CORPORATION

Technical Rationale

Project 2023-06 CIP-014 Risk Assessment Refinement
Reliability Standard CIP-014-4 | May 2024

CIP-014-4 – Physical Security

Rationale for Requirement R1

Performing Risk Assessments

Requirement R1 is developed to ensure that each Transmission Owner establishes a list of applicable Transmission station(s) or Transmission substation(s) in accordance with Attachment 1 that aligns with the periodicity of the risk assessment outlined in Requirement R4. Aligning the 36 months look ahead in Requirement R1 Part 1.1 with the 36 month cycle for conducting risk assessment in accordance with Requirement R4 ensures that system topology of the cases used to assess applicability is consistent with the system topology in the Requirement R4 risk assessment models. . Making the applicability section a separate requirement allows Transmission Owners the option to bypass the remaining requirements in the standard if they do not have any applicable Transmission station(s) or Transmission substation(s).

Rationale for Requirement R1 1.1

In performing the risk assessment, the Transmission Owner should first identify their population of Transmission stations and Transmission substations that meet the criteria contained in Attachment 1. The Standard requires the Transmission Owner to perform a risk assessment, consisting of a transmission analysis, to determine which of those Transmission stations and Transmission Substations, if rendered inoperable or damaged, could result in instability, uncontrolled separation, or Cascading within an Interconnection.

The purpose of Reliability Standard CIP-014 is to protect Transmission stations and Transmission substations, and their associated primary control centers, that if rendered inoperable or damaged as a result of a physical attack could result in instability, uncontrolled separation, or Cascading within an Interconnection. To properly identify candidates for such Transmission station(s) and Transmission substation(s), the Transmission Owner shall evaluate the criteria listed in Attachment 1.

Rationale for Requirement R1 1.2

Transmission Owners shall review and, if necessary, update the list of applicable Transmission station(s) or Transmission substation(s) per Attachment 1 every 36 months. The list of applicable Transmission station(s) or Transmission substation(s) shall include existing or planned to be in service within 36 months Transmission station(s) and Transmission substation(s). The 36-month cycle for updating the list of applicable Transmission station(s) or Transmission substation(s) per Attachment 1 aligns with the annual cycle for performing Planning Assessments per NERC Standard TPL-001. The 36-month risk assessment study cycle aligns with the 36-month planned-to-be-in-service date.

Rationale for Requirement R1 1.3
Requirements R2 through R4 define requirements that are only relevant when a TO has applicable Transmission substations or Transmission stations. The remaining requirements are therefore, unnecessary if the TO does not have any applicable Transmission substations or Transmission substations.

Rationale for Requirement R2
Each Transmission Owner shall consider, at a minimum, the specifications in Requirement R2, parts 2.1.1, 2.1.2, and 2.1.3 for general applicability to their systems, and whether specifications and thresholds need to be stipulated for each of these parts in their documented criteria.

A certain amount of discretion and flexibility is intended to be allowable for each Transmission Owner in their respective proximity Criteria to document, establish, and demonstrate from a technical basis that various aspects of proximity for their Transmission station(s) or Transmission substation(s) either are or are not appropriate to consider in their risk assessments.

The DT has determined that protecting the applicable Transmission station(s) or Transmission substation(s) in a proximity group will render a physical attack on that proximity group to be ineffective. The DT has also determined that if the applicable Transmission station(s) or Transmission substation(s) in consideration is added to the Transmission Owner's critical list for physical protection, the risk analysis for that Transmission station or Transmission substation, including any analysis that would be performed based on Requirement R2, can be foregone and considered to be complete.

The DT has determined that if a proximity group has been identified, that analysis of the proximity groups should be required in each Transmission Owner's documented criteria. This includes proximity groups comprising of Transmission station(s) or Transmission substation(s) that are owned by two or more entities. For those scenarios, it is the responsibility of any and all applicable Transmission Owners to ensure that this determination is properly addressed, and appropriate action taken pursuant to analysis.

Rationale for Requirement R3
Per requirement R3, each Transmission Owner is required to have a risk assessment methodology, but the SDT intends for each TO to have flexibility to define its own methodology, including the criteria by which analytical results will be examined to determine if a Transmission station or Transmission substation can be considered critical for the interconnection. The TO is not required to develop its own methodology and is free to use a methodology developed elsewhere, such as in coordination with neighboring TOs or ISOs.

Rational for Requirement R3, Part 3.1
TOs should have the flexibility to determine the amount of acceptable load loss, acceptable generation loss, or other measurements of system response when determining the impact of an event to the transmission system. Criteria for measures such as load loss or generation loss should consider the impact to the interconnection instead of local impacts. For that reason, the loss of load over multiple Transmission stations or Transmission substations should have a higher criticality than losing the same amount of load at a single Transmission substation or Transmission substation.

Large loss of generation or large load due to the evaluated disturbance, as well as consequences of isolating faulted equipment, could result in severe System impacts. The documented risk assessment methodology shall include the amount of acceptable load loss, the amount of acceptable generation loss, and post-event response resulting in instability, uncontrolled separation, or Cascading within an Interconnection. Conditions and thresholds for these used for determining critical Transmission station(s) or Transmission substation(s), i.e., those that if rendered inoperable or damaged as a result of a physical attack could result in instability, uncontrolled separation, or Cascading within an Interconnection, should be part of the documented risk assessment methodology.

Rationale for Requirement R3, Part 3.1.1
The items listed in Parts 3.1.1.1 through 3.1.1.2 are all post-event measures that can be used to assess the criticality of a Transmission substation or Transmission substation. While all of these items shall be considered, a TO can decide that one or more of the items are not applicable to their location within the interconnection.

Transmission Owners shall develop documented criteria for the conditions listed in Requirement R3, Part 3.1.1, which includes branch thermal exceedance thresholds, bus voltage exceedance thresholds, load loss thresholds, generation loss thresholds, etc.

Rationale for Requirement R3, Part 3.2
Dynamic simulations are required by the SAR after NERC and FERC determined that steady-state simulations alone are insufficient for determining whether or not a substation is critical. Analyses must be performed at system conditions that demonstrate criticality. Part 3.2.1 states that dynamic simulations are not required when a TO has determined that a Transmission station or Transmission substation is critical via steady-state analysis. Dynamic can still be performed if desired by the TO.

Transmission Owners shall develop documented criteria for the conditions listed in Requirement R3, Part 3.1.1, which includes branch thermal exceedance thresholds, bus voltage exceedance thresholds, load loss thresholds, generation loss thresholds, etc.

Rationale for Requirement R3, Part 3.3
Steady-state simulations can account for criteria such as relay loadability and cascading line tripping in ways that are difficult for dynamic simulations. For that reason, steady-state simulations must be performed for any Transmission stations or Transmission substations that were not determined to be critical in the dynamic simulations. Analyses must be performed at system conditions that demonstrate criticality. Part 3.3.1 states that dynamic simulations are not required when a TO has determined that a Transmission station or Transmission substation is critical via steady-state analysis. Dynamic can still be performed if desired by the TO.

Since physical attaches can take place during different times and seasons, Requirement R3, Part 3.3, requires the Transmission Owner to perform risk assessments based on steady state studies for System peak, Off-Peak Load, and other System conditions.

Rationale for Requirement R3, Part 3.4
The DT believes that a three-phase fault at the highest voltage bus is a reasonable assumption for possible events that could impact a single Transmission station or Transmission substations.

Rationale for Requirement R3, Part 3.5
The DT believes that simultaneous single-phase faults are a reasonable assumption for events that could simultaneously impact multiple Transmission stations or Transmission substations.

Rationale for Requirement R3, Part 3.6
The requirement that simulations shall assume the loss of communications and system protection is consistent with the SAR. It is also consistent with the use of "inoperable" in the standard.

Rationale for Requirement R3, Part 3.6.1
The DT believes that the use of delayed or remote clearing times is consistent with the description of a Transmission station or Transmission substation being rendered inoperable by an event that disabled local protection systems.

Rationale for Requirement R3, Part 3.6.2
While there are commonly used generic clearing times for remote clearing that are consistent across the industry, actual clearing times can be shorter or longer depending on conditions and design considerations at an individual TO. The difference of a few cycles can have a significant impact on the transient behavior of generating units, therefore, it is required that the risk analysis use clearing times that are as accurate as possible.

Rationale for Requirement R4
The SAR directed the DT to address joint ownership as part of the risk assessment. The periodicity of the coordination and risk assessment were aligned.

Rationale for Requirement R5
An objective of the CIP-014-3 Risk Assessment Refinement SAR was to align study periods, frequency of studies and the powerflow models used for the studies. A 36-month periodicity was chosen for the R4 risk assessment to reduce the periodicity options from previous versions of the standard. Additionally, a single study periodicity is more easily aligned with project in-service date considerations and model choices. As called for in Project Scope item 3 of the CIP-014-3 Risk Assessment Refinement SAR, the risk assessment must comply with the methodology developed in R3, so this language was explicitly added to R5.

Joint ownership of Transmission substations and Transmission stations was discussed in the Guidelines and Technical Basis of previous versions of the CIP-014 standard. Because the CIP-014-3 Risk Assessment Refinement SAR calls for clarification regarding Transmission substations and Transmission stations of differing ownership, this section was moved to its own requirement within R5.

Transmission Owners shall review and, if necessary, update the list of applicable Transmission station(s) or Transmission substation(s) per Attachment 1 every 36 months. The list of applicable Transmission station(s) or Transmission substation(s) shall include existing or planned to be in service within 36 months Transmission station(s) and Transmission substation(s). The 36-month cycle for updating the list of applicable Transmission station(s) or Transmission substation(s) per Attachment 1 aligns with the annual cycle for performing Planning Assessments per NERC Standard TPL-001. The 36-month risk assessment study cycle aligns with the 36-month planned-to-be-in-service date.

Rationale for Requirement R5, Part 5.2

Identification of Primary Control Centers

Previous R1.3

After completing the risk assessment under Requirement R4 and verified under Requirement R5, it is important to additionally identify the primary control center that operationally controls each Transmission station or Transmission substation, that if rendered inoperable or damaged could result in instability, uncontrolled separation, or Cascading within an Interconnection. A primary control center "operationally controls" a Transmission station or Transmission substation when the control center's electronic actions can cause direct physical actions at the identified Transmission station and Transmission substation, such as opening a breaker.

Requirement R6 through Requirement R10 are Requirement R2 through Requirement R6 in CIP-014-3. The Drafting Team did not make any changes to these Requirements. Therefore, the technical rationales are not provided here.

Rationale for Attachment 1

The purpose of Reliability Standard CIP-014 is to protect Transmission stations and Transmission substations, and their associated primary control centers, that if rendered inoperable or damaged as a result of a physical attack, could result in instability, uncontrolled separation, or Cascading within an Interconnection. To properly include those entities that own or operate such Facilities, the Reliability Standard CIP-014 primarily applies to Transmission Owners that own Transmission Facilities that meet the specific applicability criteria in Attachment 1. The Facilities described in Attachment 1 mirror those Transmission Facilities that meet bright line criteria for "Medium Impact" Transmission Facilities under Attachment 1 of Reliability Standard CIP-002-5.1a. Each Transmission Owner that owns Transmission Facilities that meet the criteria in Attachment 1 is required to perform a risk assessment to identify its Transmission stations and Transmission substations, and their associated primary control centers, that if rendered inoperable or damaged as a result of a physical attack could result in instability, uncontrolled separation, or Cascading within an Interconnection.

This standard also applies to Transmission Operators. A Transmission Operator's obligations under the standard, however, are only triggered if the Transmission Operator is notified by an applicable Transmission Owner under Requirement R6 that the Transmission Operator operates a primary control center that operationally controls a Transmission station(s) or Transmission substation(s) identified in the Requirement R4 risk assessment. A primary control center operationally controls a Transmission station or Transmission substation when the control center's electronic actions can cause direct physical action at

the identified Transmission station or Transmission substation, such as opening a breaker, as opposed to a control center that only has information from the Transmission station or Transmission substation and must coordinate direct action through another entity. Only Transmission Operators who are notified that they have primary control centers under this standard have performance obligations under Requirements R7 through R9. Primary control center, for purposes of this Standard, is the control center that the Transmission Owner or Transmission Operator, respectively, uses as its primary, permanently-manned site to physically operate a Transmission station or Transmission substation that is identified in Requirement R4 and verified in Requirement R5. Control centers that provide back-up capability are not applicable, as they are a form of resiliency and intentionally redundant.

The DT determined that continuing to use criteria for Medium Impact Transmission Facilities in Attachment 1 of CIP-002-5.1a would provide a conservative threshold for defining which Transmission stations and Transmission substations that must be included in the risk assessment in Requirement R4 of CIP-014. Additionally, the DT concluded that using CIP002-5.1a Medium Impact criteria was appropriate because it has been approved by stakeholders, NERC, and FERC, and its use provides a technically sound basis to determine which Transmission Owners should conduct the risk assessment. As described in CIP-002-5.1a, the failure of a Transmission station or Transmission substation that meets the Medium Impact criteria could have the capability to result in exceeding one or more Interconnection Reliability Operating Limits (IROLs).

Additionally, the DT determined that it was not necessary to include Generator Operators and Generator Owners in the Reliability Standard. First, Transmission stations or Transmission substations interconnecting generation facilities are considered when determining applicability. Transmission Owners will consider those Transmission stations and Transmission substations that include a Transmission station on the high side of the Generator Step-up transformer (GSU) using Applicability Section 4.1.1.1 and 4.1.1.2. As an example, a Transmission station or Transmission substation identified as a Transmission Owner facility that interconnects generation will be subject to the Requirement R1 risk assessment if it operates at 500kV or greater or if it is connected at 200 kV – 499kV to three or more other Transmission stations or Transmission substations and has an "aggregate weighted value" exceeding 3000 according to the table in Applicability Section 4.1.1.2. Second, the Transmission analysis or analyses conducted under Requirement R1 should take into account the impact of the loss of generation connected to applicable Transmission stations or Transmission substations. Additionally, the FERC order does not explicitly mention generation assets and is reasonably understood to focus on the most critical Transmission Facilities. The diagram below shows an example of a station.

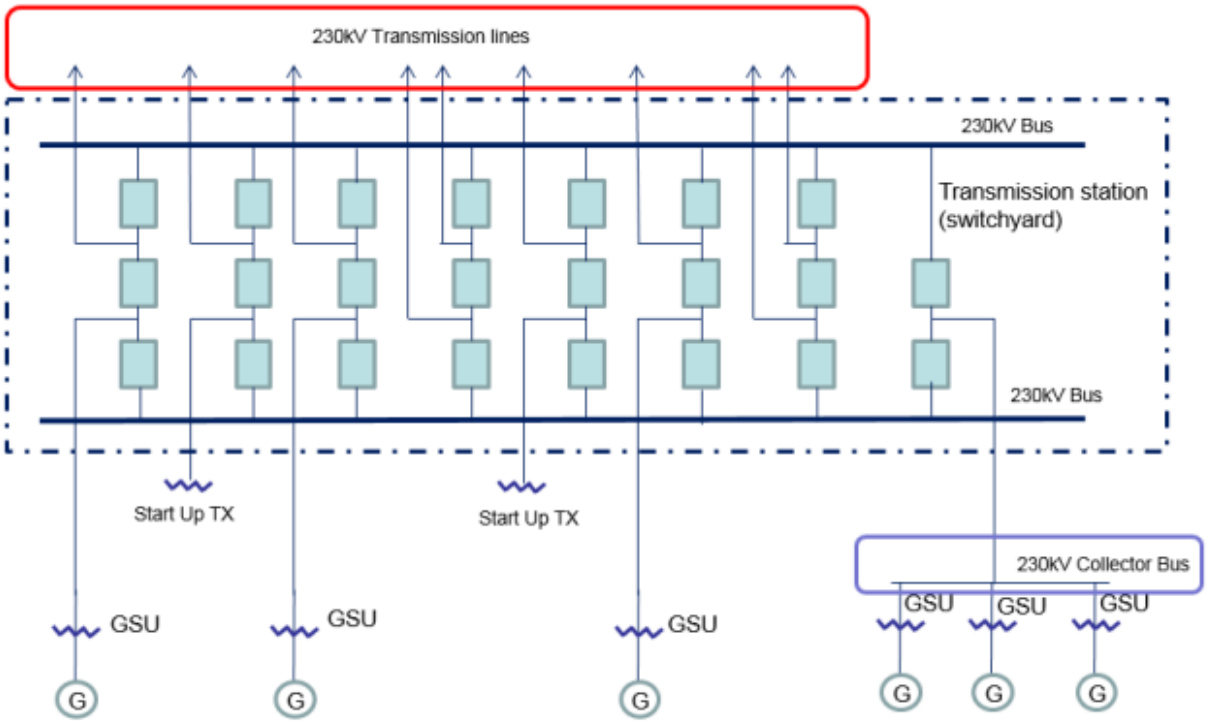

Figure from CIP-014-3 Guidelines and Technical Basis

Also, the DT uses the phrase “Transmission station(s) or Transmission substation(s)” to recognize the existence of both stations and substations. Many entities in industry consider a substation to be a location with physical borders (i.e., fence, wall, etc.) that contains at least an autotransformer. Locations also exist that do not contain autotransformers, and many entities in industry refer to those locations as stations (switching stations or switchyards). Therefore, the DT chose to use both “station” and “substation” to refer to the locations where groups of Transmission Facilities exist.

NERC
NORTH AMERICAN ELECTRIC RELIABILITY CORPORATION

Reminder
Standards Announcement
Project 2023-06 CIP-014 Risk Assessment Refinement

Be aware that this is a public proceeding and comments are publicly available upon submission. DO NOT include any CEII or otherwise sensitive information in your comments.

Initial Ballots and Non-binding Poll Open through July 3, 2024

Now Available

Initial ballots and non-binding poll of the associated Violation Risk Factors and Violation Severity Levels for **Project 2023-06 CIP-014 Risk Assessment Refinement** are open through **8 p.m. Eastern, Wednesday, July 3, 2024** for the following standard and implementation plan:

- CIP-014-4 – Physical Security
- Implementation Plan

Reminder Regarding Corporate RBB Memberships

Under the NERC Rules of Procedure, each entity and its affiliates is collectively permitted one voting membership per Registered Ballot Body Segment. Each entity that undergoes a change in corporate structure (such as a merger or acquisition) that results in the entity or affiliated entities having more than the one permitted representative in a particular Segment must withdraw the duplicate membership(s) prior to joining new ballot pools or voting on anything as part of an existing ballot pool. Contact ballotadmin@nerc.net to assist with the removal of any duplicate registrations.

Balloting

Members of the ballot pools associated with this project can log in and submit their votes by accessing the Standards Balloting and Commenting System (SBS) here.

- *Contact NERC IT support directly at https://support.nerc.net/ (Monday – Friday, 8 a.m. - 5 p.m. Eastern) for problems regarding accessing the SBS due to a forgotten password, incorrect credential error messages, or system lock-out.*
- *Passwords expire every **6 months** and must be reset.*
- *The SBS **is not** supported for use on mobile devices.*
- *Please be mindful of ballot and comment period closing dates. We ask to **allow at least 48 hours** for NERC support staff to assist with inquiries. Therefore, it is recommended that users try logging into their SBS accounts **prior to the last day** of a comment/ballot period.*

Next Steps

The ballot results will be announced and posted on the project page. The drafting team will review all responses received during the comment period and determine the next steps of the project.

For information on the Standards Development Process, refer to the Standard Processes Manual.

For more information or assistance, contact Senior Standards Developer, Ben Wu (via email) or at 470-542-6882. Subscribe to this project's observer mailing list by selecting "NERC Email Distribution Lists" from the "Service" drop-down menu and specify “Project 2023-06 CIP-014 Risk Assessment Refinement observer list” in the Description Box.



North American Electric Reliability Corporation
3353 Peachtree Rd, NE
Suite 600, North Tower
Atlanta, GA 30326
404-446-2560 | www.nerc.com

NERC
NORTH AMERICAN ELECTRIC RELIABILITY CORPORATION

Standards Announcement

Project 2023-06 CIP-014 Risk Assessment Refinement

Be aware that this is a public proceeding and comments are publicly available upon submission. DO NOT include any CEII or otherwise sensitive information in your comments.

Formal Comment Period Open through July 3, 2024
Ballot Pools Forming through June 18, 2024

Now Available

A 45-day formal comment period for **Project 2023-06 CIP-014 Risk Assessment Refinement** is open through **8 p.m. Eastern, Wednesday, July 3, 2024** for the following standard and implementation plan:

- CIP-014-4 – Physical Security
- Implementation Plan

Commenting

Use the Standards Balloting and Commenting System (SBS) to submit comments. An unofficial Word version of the comment form is posted on the project page.

Reminder Regarding Corporate RBB Memberships

Under the NERC Rules of Procedure, each entity and its affiliates is collectively permitted one voting membership per Registered Ballot Body Segment. Each entity that undergoes a change in corporate structure (such as a merger or acquisition) that results in the entity or affiliated entities having more than the one permitted representative in a particular Segment must withdraw the duplicate membership(s) prior to joining new ballot pools or voting on anything as part of an existing ballot pool. Contact ballotadmin@nerc.net to assist with the removal of any duplicate registrations.

Ballot Pools

Ballot pools are being formed through **8 p.m. Eastern, Tuesday, June 18, 2024.** Registered Ballot Body members can join the ballot pools here.

- *Contact NERC IT support directly at https://support.nerc.net/ (Monday – Friday, 8 a.m. - 5 p.m. Eastern) for problems regarding accessing the SBS due to a forgotten password, incorrect credential error messages, or system lock-out.*
- *Passwords expire every **6 months** and must be reset.*
- *The SBS **is not** supported for use on mobile devices.*
- *Please be mindful of ballot and comment period closing dates. We ask to **allow at least 48 hours** for NERC support staff to assist with inquiries. Therefore, it is recommended that users try logging into their SBS accounts **prior to the last day** of a comment/ballot period.*

Next Steps

Initial ballots for the standard and implementation plan, as well as the non-binding poll of the associated Violation Risk Factors and Violation Severity Levels will be conducted **June 24 – July 3, 2024**.

For information on the Standards Development Process, refer to the Standard Processes Manual.

For more information or assistance, contact Senior Standards Developer**,** Ben Wu (via email) or at 470-542-6882. Subscribe to this project's observer mailing list by selecting "NERC Email Distribution Lists" from the "Service" drop-down menu and specify “Project 2023-06 CIP-014 Risk Assessment Refinement observer list” in the Description Box.



North American Electric Reliability Corporation
3353 Peachtree Rd, NE
Suite 600, North Tower
Atlanta, GA 30326
404-446-2560 | www.nerc.com

BALLOT RESULTS

Comment: View Comment Results (/CommentResults/Index/327)
Ballot Name: Project 2023-06 CIP-014 Risk Assessment Refinement CIP-014-4 IN 1 ST
Voting Start Date: 6/24/2024 12:01:00 AM
Voting End Date: 7/3/2024 8:00:00 PM
Ballot Type: ST
Ballot Activity: IN
Ballot Series: 1
Total # Votes: 249
Total Ballot Pool: 294
Quorum: 84.69
Quorum Established Date: 7/3/2024 1:26:32 PM
Weighted Segment Value: 11.67

Segment	Ballot Pool	Segment Weight	Affirmative Votes	Affirmative Fraction	Negative Votes w/ Comment	Negative Fraction w/ Comment	Negative Votes w/o Comment	Abstain	No Vote
Segment: 1	85	1	4	0.063	60	0.938	0	8	13
Segment: 2	7	0.1	0	0	1	0.1	0	5	1
Segment: 3	68	1	3	0.056	51	0.944	0	6	8
Segment: 4	15	0.8	0	0	8	0.8	0	2	5
Segment: 5	66	1	4	0.085	43	0.915	0	7	12
Segment: 6	46	1	1	0.027	36	0.973	0	3	6
Segment: 7	0	0	0	0	0	0	0	0	0
Segment: 8	0	0	0	0	0	0	0	0	0

© 2026 - NERC Ver 4.2.1.0 Machine Name: ATLVPEROWEB02

Segment	Ballot Pool	Segment Weight	Affirmative Votes	Affirmative Fraction	Negative Votes w/ Comment	Negative Fraction w/ Comment	Negative Votes w/o Comment	Abstain	No Vote
Segment: 9	0	0	0	0	0	0	0	0	0
Segment: 10	7	0.5	4	0.4	1	0.1	0	2	0
Totals:	294	5.4	16	0.63	200	4.77	0	33	45

BALLOT POOL MEMBERS

Show All entries Search: Search

Segment	Organization	Voter	Designated Proxy	Ballot	NERC Memo
1	AEP - AEP Service Corporation	Dennis Sauriol		Negative	Comments Submitted
1	Allete - Minnesota Power, Inc.	Hillary Creurer		Negative	Comments Submitted
1	Ameren - Ameren Services	Tamara Evey		Negative	Comments Submitted
1	American Transmission Company, LLC	Amy Wilke		None	N/A
1	APS - Arizona Public Service Co.	Daniela Atanasovski		Negative	Comments Submitted
1	Arkansas Electric Cooperative Corporation	Emily Corley		Abstain	N/A
1	Associated Electric Cooperative, Inc.	Mark Riley		Negative	Third-Party Comments
1	Austin Energy	Thomas Standifur		Negative	Comments Submitted

© 2026 - NERC Ver 4.2.1.0 Machine Name: ATLVPEROWEB02

Segment	Organization	Voter	Designated Proxy	Ballot	NERC Memo
1	Balancing Authority of Northern California	Kevin Smith	Tim Kelley	Negative	Comments Submitted
1	BC Hydro and Power Authority	Adrian Andreoiu		Abstain	N/A
1	Berkshire Hathaway Energy - MidAmerican Energy Co.	Terry Harbour		Negative	Comments Submitted
1	Black Hills Corporation	Micah Runner		Negative	Comments Submitted
1	Bonneville Power Administration	Kamala Rogers-Holliday		Negative	Comments Submitted
1	CenterPoint Energy Houston Electric, LLC	Daniela Hammons		Negative	Comments Submitted
1	Central Iowa Power Cooperative	Kevin Lyons		Negative	Third-Party Comments
1	City Utilities of Springfield, Missouri	Michael Buyce		Negative	Third-Party Comments
1	Colorado Springs Utilities	Corey Walker		Negative	Third-Party Comments
1	Con Ed - Consolidated Edison Co. of New York	Dermot Smyth		Negative	Third-Party Comments
1	Dairyland Power Cooperative	Karrie Schuldt		None	N/A
1	Dominion - Dominion Virginia Power	Elizabeth Weber		Negative	Comments Submitted
1	Duke Energy	Katherine Street		Negative	Third-Party Comments
1	Edison International - Southern California Edison Company	Robert Blackney		Negative	Comments Submitted
1	Entergy	Brian Lindsey		Negative	Comments Submitted
1	Evergy	Kevin Frick	Alan Kloster	Negative	Comments Submitted

© 2026 - NERC Ver 4.2.1.0 Machine Name: ATLVPEROWEB02

Segment	Organization	Voter	Designated Proxy	Ballot	NERC Memo
1	Eversource Energy	Joshua London		Negative	Comments Submitted
1	Exelon	Daniel Gacek		Affirmative	N/A
1	FirstEnergy - FirstEnergy Corporation	Theresa Ciancio		Negative	Comments Submitted
1	Georgia Transmission Corporation	Greg Davis	Stephen Stafford	Negative	Comments Submitted
1	Glencoe Light and Power Commission	Terry Volkmann		Negative	Third-Party Comments
1	Great River Energy	Gordon Pietsch		Negative	Third-Party Comments
1	Hydro One Networks, Inc.	Emma Halilovic	Lidija Efremova	Negative	Comments Submitted
1	Hydro-Quebec (HQ)	Nicolas Turcotte	Chantal Mazza	Negative	Comments Submitted
1	IDACORP - Idaho Power Company	Sean Steffensen		Affirmative	N/A
1	Imperial Irrigation District	Jesus Sammy Alcaraz	Denise Sanchez	Negative	Comments Submitted
1	International Transmission Company Holdings Corporation	Michael Moltane	Gail Elliott	Negative	Comments Submitted
1	Lakeland Electric	Larry Watt		None	N/A
1	Lincoln Electric System	Josh Johnson		Negative	Third-Party Comments
1	Long Island Power Authority	Isidoro Behar		Negative	Third-Party Comments
1	Los Angeles Department of Water and Power	faranak sarbaz		None	N/A
1	Lower Colorado River Authority	Matt Lewis	James Baldwin	Negative	Comments Submitted
1	M and A Electric Power Cooperative	William Price		Negative	Third-Party Comments

© 2026 - NERC Ver 4.2.1.0 Machine Name: ATLVPEROWEB02

Segment	Organization	Voter	Designated Proxy	Ballot	NERC Memo
1	Manitoba Hydro	Nazra Gladu		Negative	Third-Party Comments
1	Minnkota Power Cooperative Inc.	Theresa Allard	Andy Fuhrman	Negative	Comments Submitted
1	Muscatine Power and Water	Andrew Kurriger		None	N/A
1	N.W. Electric Power Cooperative, Inc.	Mark Ramsey		Negative	Third-Party Comments
1	National Grid USA	Michael Jones		Negative	Third-Party Comments
1	NB Power Corporation	Jeffrey Streifling		Negative	Comments Submitted
1	Nebraska Public Power District	Jamison Cawley		Negative	Third-Party Comments
1	Network and Security Technologies	Nick Lauriat	Roger Fradenburgh	None	N/A
1	New York Power Authority	Daniel Valle		Negative	Third-Party Comments
1	NextEra Energy - Florida Power and Light Co.	Silvia Mitchell		Negative	Comments Submitted
1	NiSource - Northern Indiana Public Service Co.	Alison Nickells		None	N/A
1	Northeast Missouri Electric Power Cooperative	Brett Douglas		Negative	Third-Party Comments
1	OGE Energy - Oklahoma Gas and Electric Co.	Terri Pyle		Affirmative	N/A
1	Oncor Electric Delivery	Byron Booker		Abstain	N/A
1	OTP - Otter Tail Power Company	Charles Wicklund		Negative	Third-Party Comments
1	Pacific Gas and Electric Company	Marco Rios	Bob Cardle	Abstain	N/A

© 2026 - NERC Ver 4.2.1.0 Machine Name: ATLVPEROWEB02

Segment	Organization	Voter	Designated Proxy	Ballot	NERC Memo
1	Pedernales Electric Cooperative, Inc.	Bradley Collard		None	N/A
1	Platte River Power Authority	Marissa Archie		None	N/A
1	Portland General Electric Co.	Brooke Jockin		Abstain	N/A
1	PPL Electric Utilities Corporation	Michelle McCartney Longo		Negative	Comments Submitted
1	PSEG - Public Service Electric and Gas Co.	Karen Arnold		Negative	Third-Party Comments
1	Public Utility District No. 1 of Chelan County	Diane E Landry		Negative	Comments Submitted
1	Public Utility District No. 1 of Snohomish County	Alyssia Rhoads		Negative	Third-Party Comments
1	Public Utility District No. 2 of Grant County, Washington	Joanne Anderson		Abstain	N/A
1	Sacramento Municipal Utility District	Wei Shao	Tim Kelley	Negative	Comments Submitted
1	Salt River Project	Laura Somak		Negative	Comments Submitted
1	Santee Cooper	Chris Wagner		Negative	Comments Submitted
1	SaskPower	Wayne Guttormson		None	N/A
1	Seattle City Light	Michael Jang		Negative	Comments Submitted
1	Seminole Electric Cooperative, Inc.	Kristine Ward		Abstain	N/A
1	Sempra - San Diego Gas and Electric	Mo Derbas	Megan Caulson	Negative	Third-Party Comments
1	Sho-Me Power Electric Cooperative	Olivia Olson		None	N/A

© 2026 - NERC Ver 4.2.1.0 Machine Name: ATLVPEROWEB02

Segment	Organization	Voter	Designated Proxy	Ballot	NERC Memo
1	Southern Company - Southern Company Services, Inc.	Matt Carden		Negative	Comments Submitted
1	Southwestern Power Administration	Angela Wheat		Negative	Third-Party Comments
1	Sunflower Electric Power Corporation	Paul Mehlhaff		Abstain	N/A
1	Tacoma Public Utilities (Tacoma, WA)	John Merrell	Jennie Wike	Negative	Comments Submitted
1	Tallahassee Electric (City of Tallahassee, FL)	Scott Langston		None	N/A
1	Tennessee Valley Authority	David Plumb		Negative	Comments Submitted
1	Tri-State G and T Association, Inc.	Donna Wood		Negative	Comments Submitted
1	U.S. Bureau of Reclamation	Richard Jackson		Affirmative	N/A
1	Unisource - Tucson Electric Power Co.	Jessica Cordero		Negative	Comments Submitted
1	VELCO -Vermont Electric Power Company, Inc.	Randall Buswell		None	N/A
1	Western Area Power Administration	Ben Hammer		Negative	Comments Submitted
1	Xcel Energy, Inc.	Eric Barry		Negative	Third-Party Comments
2	California ISO	Darcy O'Connell		Abstain	N/A
2	Electric Reliability Council of Texas, Inc.	Kennedy Meier		Abstain	N/A
2	ISO New England, Inc.	John Pearson		Negative	Comments Submitted
2	Midcontinent ISO, Inc.	Bobbi Welch		Abstain	N/A
2	New York Independent System Operator	Gregory Campoli		None	N/A

© 2026 - NERC Ver 4.2.1.0 Machine Name: ATLVPEROWEB02

Segment	Organization	Voter	Designated Proxy	Ballot	NERC Memo
2	PJM Interconnection, L.L.C.	Thomas Foster	Elizabeth Davis	Abstain	N/A
2	Southwest Power Pool, Inc. (RTO)	Joshua Phillips		Abstain	N/A
3	AEP	Leshel Hutchings		Negative	Comments Submitted
3	Ameren - Ameren Services	David Jendras Sr		Negative	Comments Submitted
3	APS - Arizona Public Service Co.	Jessica Lopez		Negative	Comments Submitted
3	Arkansas Electric Cooperative Corporation	Ayslynn Mcavoy		Abstain	N/A
3	Associated Electric Cooperative, Inc.	Todd Bennett		Negative	Third-Party Comments
3	Austin Energy	Lovita Griffin		Negative	Comments Submitted
3	Avista - Avista Corporation	Robert Follini		Affirmative	N/A
3	BC Hydro and Power Authority	Ming Jiang		Abstain	N/A
3	Berkshire Hathaway Energy - MidAmerican Energy Co.	Joseph Amato		Negative	Comments Submitted
3	Black Hills Corporation	Josh Combs	Carly Miller	Negative	Comments Submitted
3	Bonneville Power Administration	Ron Sporseen		Negative	Comments Submitted
3	Buckeye Power, Inc.	Tom Schmidt	Ryan Strom	Abstain	N/A
3	Central Electric Power Cooperative (Missouri)	Adam Weber		Negative	Third-Party Comments
3	City Utilities of Springfield, Missouri	Jessica Morrissey		Negative	Third-Party Comments
3	Colorado Springs Utilities	Hillary Dobson		Negative	Third-Party Comments

© 2026 - NERC Ver 4.2.1.0 Machine Name: ATLVPEROWEB02

Segment	Organization	Voter	Designated Proxy	Ballot	NERC Memo
3	Con Ed - Consolidated Edison Co. of New York	Peter Yost		Negative	Third-Party Comments
3	Dominion - Dominion Virginia Power	Bill Garvey		Negative	Comments Submitted
3	Duke Energy - Florida Power Corporation	Marcelo Pesantez		Negative	Third-Party Comments
3	Edison International - Southern California Edison Company	Romel Aquino		None	N/A
3	Entergy	James Keele		Negative	Comments Submitted
3	Evergy	Marcus Moor	Alan Kloster	Negative	Comments Submitted
3	Eversource Energy	Vicki O'Leary		Negative	Comments Submitted
3	Exelon	Kinte Whitehead		Affirmative	N/A
3	FirstEnergy - FirstEnergy Corporation	Aaron Ghodooshim		Negative	Third-Party Comments
3	Georgia System Operations Corporation	Scott McGough		Negative	Third-Party Comments
3	Great River Energy	Michael Brytowski		Negative	Third-Party Comments
3	Imperial Irrigation District	George Kirschner	Denise Sanchez	Negative	Comments Submitted
3	KAMO Electric Cooperative	Tony Gott		Negative	Third-Party Comments
3	Lincoln Electric System	Sam Christensen		Negative	Comments Submitted
3	Los Angeles Department of Water and Power	Fausto Serratos		Abstain	N/A
3	M and A Electric Power Cooperative	Gary Dollins		Negative	Third-Party Comments
3	MEAG Power	Roger Brand	Rebika Yitna	Negative	Comments Submitted

© 2026 - NERC Ver 4.2.1.0 Machine Name: ATLVPEROWEB02

Segment	Organization	Voter	Designated Proxy	Ballot	NERC Memo
3	MGE Energy - Madison Gas and Electric Co.	Benjamin Widder		Negative	Third-Party Comments
3	Muscatine Power and Water	Seth Shoemaker		Negative	Third-Party Comments
3	National Grid USA	Brian Shanahan		Negative	Third-Party Comments
3	Nebraska Public Power District	Tony Eddleman		Negative	Third-Party Comments
3	New York Power Authority	Richard Machado		Negative	Third-Party Comments
3	NextEra Energy - Florida Power and Light Co.	Karen Demos		Negative	Comments Submitted
3	NiSource - Northern Indiana Public Service Co.	Steven Taddeucci		Negative	Comments Submitted
3	Northeast Missouri Electric Power Cooperative	Skyler Wiegmann		None	N/A
3	Northern California Power Agency	Michael Whitney	Chris Carnesi	None	N/A
3	NW Electric Power Cooperative, Inc.	Heath Henry		Negative	Third-Party Comments
3	OGE Energy - Oklahoma Gas and Electric Co.	Donald Hargrove		Affirmative	N/A
3	Omaha Public Power District	David Heins		Negative	Third-Party Comments
3	Orlando Utilities Commission	Ballard Mutters		None	N/A
3	OTP - Otter Tail Power Company	Wendi Olson		Negative	Third-Party Comments
3	Pacific Gas and Electric Company	Sandra Ellis	Bob Cardle	Abstain	N/A
3	Platte River Power Authority	Richard Kiess		None	N/A

© 2026 - NERC Ver 4.2.1.0 Machine Name: ATLVPEROWEB02

Segment	Organization	Voter	Designated Proxy	Ballot	NERC Memo
3	PNM Resources - Public Service Company of New Mexico	Amy Wesselkamper		Negative	Comments Submitted
3	Portland General Electric Co.	Mayra Franco		Abstain	N/A
3	PPL - Louisville Gas and Electric Co.	James Frank		Negative	Comments Submitted
3	PSEG - Public Service Electric and Gas Co.	Christopher Murphy		Negative	Third-Party Comments
3	Public Utility District No. 1 of Chelan County	Joyce Gundry		Negative	Comments Submitted
3	Puget Sound Energy, Inc.	Kelley Sargent		Negative	Comments Submitted
3	Sacramento Municipal Utility District	Nicole Looney	Tim Kelley	Negative	Comments Submitted
3	Salt River Project	Mathew Weber		Negative	Comments Submitted
3	Santee Cooper	Vicky Budreau		Negative	Comments Submitted
3	Seattle City Light	Zenon O'young-Chu		Negative	Comments Submitted
3	Seminole Electric Cooperative, Inc.	Marc Sedor		None	N/A
3	Sempra - San Diego Gas and Electric	Bryan Bennett		Negative	Third-Party Comments
3	Sho-Me Power Electric Cooperative	Jarrod Murdaugh		Negative	Third-Party Comments
3	Snohomish County PUD No. 1	Holly Chaney		Negative	Third-Party Comments
3	Southern Company - Alabama Power Company	Joel Dembowski		Negative	Comments Submitted
3	Southern Indiana Gas and Electric Co.	Ryan Snyder		Negative	Comments Submitted

© 2026 - NERC Ver 4.2.1.0 Machine Name: ATLVPEROWEB02

Segment	Organization	Voter	Designated Proxy	Ballot	NERC Memo
3	Tennessee Valley Authority	Ian Grant		Negative	Comments Submitted
3	Tri-State G and T Association, Inc.	Ryan Walter		Negative	Comments Submitted
3	TXNM Energy	Scott Thompson		None	N/A
3	Xcel Energy, Inc.	Nicholas Friebel		None	N/A
4	Alliant Energy Corporation Services, Inc.	Larry Heckert		None	N/A
4	Arkansas Electric Cooperative Corporation	Jenni Sudduth		None	N/A
4	Buckeye Power, Inc.	Jason Procuniar	Ryan Strom	Abstain	N/A
4	City Utilities of Springfield, Missouri	Jerry Bradshaw		Negative	Third-Party Comments
4	FirstEnergy - FirstEnergy Corporation	Mark Garza		Negative	Comments Submitted
4	Georgia System Operations Corporation	Katrina Lyons	Jason Snodgrass	Negative	Third-Party Comments
4	Northern California Power Agency	Marty Hostler		None	N/A
4	Oklahoma Municipal Power Authority	Michael Watt		None	N/A
4	Public Utility District No. 1 of Snohomish County	John D. Martinsen		Negative	Third-Party Comments
4	Public Utility District No. 2 of Grant County, Washington	Karla Weaver		Abstain	N/A
4	Sacramento Municipal Utility District	Foung Mua	Tim Kelley	Negative	Comments Submitted
4	Seattle City Light	Robert Jones		Negative	Comments Submitted
4	Utility Services, Inc.	Carver Powers		Negative	Comments Submitted
4	WEC Energy Group, Inc.	Matthew Beilfuss		None	N/A

© 2026 - NERC Ver 4.2.1.0 Machine Name: ATLVPEROWEB02

Segment	Organization	Voter	Designated Proxy	Ballot	NERC Memo
4	Western Power Pool	Kevin Conway		Negative	Comments Submitted
5	AEP	Thomas Foltz		Negative	Comments Submitted
5	Ameren - Ameren Missouri	Sam Dwyer		Negative	Comments Submitted
5	APS - Arizona Public Service Co.	Andrew Smith		Negative	Comments Submitted
5	Associated Electric Cooperative, Inc.	Chuck Booth		Negative	Third-Party Comments
5	Austin Energy	Michael Dillard		Negative	Comments Submitted
5	Avista - Avista Corporation	Glen Farmer		None	N/A
5	BC Hydro and Power Authority	Quincy Wang		Abstain	N/A
5	Berkshire Hathaway - NV Energy	Dwanique Spiller		Negative	Comments Submitted
5	Black Hills Corporation	Sheila Suurmeier		Negative	Comments Submitted
5	Buckeye Power, Inc.	Kevin Zemanek	Ryan Strom	Abstain	N/A
5	California Department of Water Resources	ASM Mostafa		None	N/A
5	CMS Energy - Consumers Energy Company	David Greyerbiehl		None	N/A
5	Colorado Springs Utilities	Jeffrey Icke		Negative	Third-Party Comments
5	Con Ed - Consolidated Edison Co. of New York	Michelle Pagano		Negative	Third-Party Comments
5	Constellation	Alison MacKellar		Abstain	N/A
5	Cowlitz County PUD	Deanna Carlson		Negative	Third-Party Comments

© 2026 - NERC Ver 4.2.1.0 Machine Name: ATLVPEROWEB02

Segment	Organization	Voter	Designated Proxy	Ballot	NERC Memo
5	Dairyland Power Cooperative	Tommy Drea		Negative	Third-Party Comments
5	Dominion - Dominion Resources, Inc.	Anna Salmon		Negative	Comments Submitted
5	DTE Energy - Detroit Edison Company	Mohamad Elhusseini		None	N/A
5	Duke Energy	Dale Goodwine		Negative	Third-Party Comments
5	Edison International - Southern California Edison Company	Selene Willis		Negative	Comments Submitted
5	Electric Power Supply Association	Bill Zuretti		None	N/A
5	Entergy - Entergy Services, Inc.	Gail Golden		Negative	Comments Submitted
5	Evergy	Jeremy Harris	Alan Kloster	Negative	Comments Submitted
5	FirstEnergy - FirstEnergy Corporation	Matthew Augustin		Negative	Comments Submitted
5	Great River Energy	Jacalynn Bentz		None	N/A
5	Greybeard Compliance Services, LLC	Mike Gabriel		None	N/A
5	Hydro-Quebec (HQ)	Junji Yamaguchi	Chantal Mazza	Negative	Comments Submitted
5	Imperial Irrigation District	Tino Zaragoza	Denise Sanchez	Negative	Comments Submitted
5	JEA	John Babik		None	N/A
5	Lincoln Electric System	Brittany Millard		Negative	Comments Submitted
5	Los Angeles Department of Water and Power	Robert Kerrigan		Abstain	N/A
5	Lower Colorado River Authority	Teresa Krabe		Negative	Comments Submitted

© 2026 - NERC Ver 4.2.1.0 Machine Name: ATLVPEROWEB02

Segment	Organization	Voter	Designated Proxy	Ballot	NERC Memo
5	National Grid USA	Robin Berry		Negative	Third-Party Comments
5	NB Power Corporation - New Brunswick Power Transmission Corporation	Fon Hiew		Negative	Comments Submitted
5	Nebraska Public Power District	Ronald Bender		Negative	Third-Party Comments
5	New York Power Authority	Zahid Qayyum		Negative	Third-Party Comments
5	NextEra Energy	Richard Vendetti		Negative	Comments Submitted
5	NiSource - Northern Indiana Public Service Co.	Kathryn Tackett		Negative	Comments Submitted
5	Northern California Power Agency	Jeremy Lawson	Chris Carnesi	None	N/A
5	NRG - NRG Energy, Inc.	Patricia Lynch		Abstain	N/A
5	OGE Energy - Oklahoma Gas and Electric Co.	Patrick Wells		Affirmative	N/A
5	Oglethorpe Power Corporation	Donna Johnson		Negative	Third-Party Comments
5	Oklahoma Municipal Power Authority	Patrick Tuttle		None	N/A
5	Omaha Public Power District	Kayleigh Wilkerson		Negative	Third-Party Comments
5	OTP - Otter Tail Power Company	Stacy Wahlund		Negative	Third-Party Comments
5	Pacific Gas and Electric Company	Tyler Brun	Bob Cardle	Abstain	N/A
5	Platte River Power Authority	Jon Osell		Negative	Third-Party Comments
5	Portland General Electric Co.	Ryan Olson		None	N/A

© 2026 - NERC Ver 4.2.1.0 Machine Name: ATLVPEROWEB02

Segment	Organization	Voter	Designated Proxy	Ballot	NERC Memo
5	PPL - Louisville Gas and Electric Co.	Julie Hostrander		None	N/A
5	PSEG Nuclear LLC	Tim Kucey		Negative	Third-Party Comments
5	Public Utility District No. 1 of Chelan County	Rebecca Wickel		Negative	Comments Submitted
5	Public Utility District No. 1 of Snohomish County	Becky Burden		Negative	Third-Party Comments
5	Sacramento Municipal Utility District	Ryder Couch	Tim Kelley	Negative	Comments Submitted
5	Salt River Project	Thomas Johnson		Negative	Comments Submitted
5	Santee Cooper	Carey Salisbury		Negative	Comments Submitted
5	Seattle City Light	Chris Shultz		Negative	Comments Submitted
5	Seminole Electric Cooperative, Inc.	Melanie Wong		Abstain	N/A
5	Sempra - San Diego Gas and Electric	Jennifer Wright		Negative	Third-Party Comments
5	Southern Company - Southern Company Generation	Leslie Burke		Negative	Comments Submitted
5	Southern Indiana Gas and Electric Co.	Larry Rogers		Affirmative	N/A
5	Talen Generation, LLC	Donald Lock		Affirmative	N/A
5	Tennessee Valley Authority	Darren Boehm		Negative	Comments Submitted
5	Tri-State G and T Association, Inc.	Sergio Banuelos		Negative	Comments Submitted
5	U.S. Bureau of Reclamation	Wendy Kalidass		Affirmative	N/A
5	Xcel Energy, Inc.	Gerry Huitt		Negative	Third-Party Comments

© 2026 - NERC Ver 4.2.1.0 Machine Name: ATLVPEROWEB02

Segment	Organization	Voter	Designated Proxy	Ballot	NERC Memo
6	AEP	Mathew Miller		Negative	Comments Submitted
6	Ameren - Ameren Services	Robert Quinlivan		Negative	Comments Submitted
6	APS - Arizona Public Service Co.	Marcus Bortman		Negative	Comments Submitted
6	Arkansas Electric Cooperative Corporation	Bruce Walkup		Abstain	N/A
6	Associated Electric Cooperative, Inc.	Brian Ackermann		Negative	Third-Party Comments
6	Austin Energy	Imane Mrini		Negative	Comments Submitted
6	Berkshire Hathaway - PacifiCorp	Lindsay Wickizer		Negative	Comments Submitted
6	Black Hills Corporation	Rachel Schuldt		Negative	Comments Submitted
6	Bonneville Power Administration	Tanner Brier		Negative	Comments Submitted
6	Cleco Corporation	Robert Hirchak	Clay Walker	None	N/A
6	Con Ed - Consolidated Edison Co. of New York	Jason Chandler		Negative	Third-Party Comments
6	Constellation	Kimberly Turco		Abstain	N/A
6	Dominion - Dominion Resources, Inc.	Sean Bodkin		Negative	Comments Submitted
6	Duke Energy	John Sturgeon		Negative	Third-Party Comments
6	Edison International - Southern California Edison Company	Stephanie Kenny		Negative	Comments Submitted
6	Entergy	Julie Hall		Negative	Comments Submitted
6	Evergy	Tiffany Lake	Alan Kloster	Negative	Comments Submitted

© 2026 - NERC Ver 4.2.1.0 Machine Name: ATLVPEROWEB02

Segment	Organization	Voter	Designated Proxy	Ballot	NERC Memo
6	FirstEnergy - FirstEnergy Corporation	Stacey Sheehan		Negative	Comments Submitted
6	Great River Energy	Brian Meloy		Negative	Third-Party Comments
6	Imperial Irrigation District	Diana Torres	Denise Sanchez	Negative	Comments Submitted
6	Lincoln Electric System	Eric Ruskamp		Negative	Comments Submitted
6	Los Angeles Department of Water and Power	Anton Vu		None	N/A
6	Muscatine Power and Water	Nicholas Burns		Negative	Third-Party Comments
6	New York Power Authority	Shelly Dineen		Negative	Third-Party Comments
6	NextEra Energy - Florida Power and Light Co.	Justin Welty		Negative	Comments Submitted
6	NiSource - Northern Indiana Public Service Co.	Dmitriy Bazylyuk		Negative	Comments Submitted
6	Northern California Power Agency	Dennis Sismaet	Chris Carnesi	None	N/A
6	OGE Energy - Oklahoma Gas and Electric Co.	Ashley F Stringer	Dane Rogers	Affirmative	N/A
6	Omaha Public Power District	Shonda Markus		Negative	Third-Party Comments
6	Platte River Power Authority	Sabrina Martz		Negative	Third-Party Comments
6	Portland General Electric Co.	Stefanie Burke		Abstain	N/A
6	Powerex Corporation	Raj Hundal		None	N/A
6	PPL - Louisville Gas and Electric Co.	Linn Oelker		Negative	Comments Submitted

© 2026 - NERC Ver 4.2.1.0 Machine Name: ATLVPEROWEB02

Segment	Organization	Voter	Designated Proxy	Ballot	NERC Memo
6	PSEG - PSEG Energy Resources and Trade LLC	Laura Wu		Negative	Third-Party Comments
6	Public Utility District No. 1 of Chelan County	Anne Kronshage		Negative	Comments Submitted
6	Sacramento Municipal Utility District	Charles Norton	Tim Kelley	Negative	Comments Submitted
6	Salt River Project	Timothy Singh		Negative	Comments Submitted
6	Santee Cooper	Marty Watson		Negative	Comments Submitted
6	Seattle City Light	Daren Brubaker		Negative	Comments Submitted
6	Seminole Electric Cooperative, Inc.	Bret Galbraith		None	N/A
6	Snohomish County PUD No. 1	John Liang		Negative	Third-Party Comments
6	Southern Company - Southern Company Generation	Ron Carlsen		Negative	Comments Submitted
6	Southern Indiana Gas and Electric Co.	Kati Barr		Negative	Comments Submitted
6	Tennessee Valley Authority	Armando Rodriguez		Negative	Comments Submitted
6	Western Area Power Administration	Jennifer Neville		Negative	Comments Submitted
6	Xcel Energy, Inc.	Steve Szablya		None	N/A
10	Midwest Reliability Organization	Mark Flanary		Affirmative	N/A
10	New York State Reliability Council	Wesley Yeomans		Negative	Third-Party Comments
10	Northeast Power Coordinating Council	Gerry Dunbar		Abstain	N/A

© 2026 - NERC Ver 4.2.1.0 Machine Name: ATLVPEROWEB02

Segment	Organization	Voter	Designated Proxy	Ballot	NERC Memo
10	ReliabilityFirst	Tyler Schwendiman		Affirmative	N/A
10	SERC Reliability Corporation	Dave Krueger		Abstain	N/A
10	Texas Reliability Entity, Inc.	Rachel Coyne		Affirmative	N/A
10	Western Electricity Coordinating Council	Steven Rueckert		Affirmative	N/A

Previous 1 Next

Showing 1 to 294 of 294 entries

© 2026 - NERC Ver 4.2.1.0 Machine Name: ATLVPEROWEB02

BALLOT RESULTS

Comment: View Comment Results (/CommentResults/Index/327)
Ballot Name: Project 2023-06 CIP-014 Risk Assessment Refinement CIP-014-4 | Non-Binding Poll IN 1 NB
Voting Start Date: 6/24/2024 12:01:00 AM
Voting End Date: 7/3/2024 8:00:00 PM
Ballot Type: NB
Ballot Activity: IN
Ballot Series: 1
Total # Votes: 231
Total Ballot Pool: 282
Quorum: 81.91
Quorum Established Date: 7/3/2024 2:44:17 PM
Weighted Segment Value: 8.09

Segment	Ballot Pool	Segment Weight	Affirmative Votes	Affirmative Fraction	Negative Votes	Negative Fraction	Abstain	No Vote
Segment: 1	81	1	4	0.08	46	0.92	17	14
Segment: 2	7	0.1	0	0	1	0.1	5	1
Segment: 3	65	1	4	0.093	39	0.907	12	9
Segment: 4	14	0.7	0	0	7	0.7	2	5
Segment: 5	64	1	2	0.053	36	0.947	12	14
Segment: 6	44	1	1	0.033	29	0.967	7	7
Segment: 7	0	0	0	0	0	0	0	0
Segment: 8	0	0	0	0	0	0	0	0
Segment: 9	0	0	0	0	0	0	0	0

© 2026 - NERC Ver 4.2.1.0 Machine Name: ATLVPEROWEB02

Segment	Ballot Pool	Segment Weight	Affirmative Votes	Affirmative Fraction	Negative Votes	Negative Fraction	Abstain	No Vote
Segment: 10	7	0.4	3	0.3	1	0.1	2	1
Totals:	282	5.2	14	0.559	159	4.641	57	51

BALLOT POOL MEMBERS

Show All entries Search: Search

Segment	Organization	Voter	Designated Proxy	Ballot	NERC Memo
1	AEP - AEP Service Corporation	Dennis Sauriol		Negative	No Comment Submitted
1	Allete - Minnesota Power, Inc.	Hillary Creurer		Negative	No Comment Submitted
1	Ameren - Ameren Services	Tamara Evey		Abstain	N/A
1	American Transmission Company, LLC	Amy Wilke		None	N/A
1	APS - Arizona Public Service Co.	Daniela Atanasovski		Negative	No Comment Submitted
1	Arkansas Electric Cooperative Corporation	Emily Corley		Abstain	N/A
1	Associated Electric Cooperative, Inc.	Mark Riley		Negative	No Comment Submitted
1	Austin Energy	Thomas Standifur		Negative	No Comment Submitted

© 2026 - NERC Ver 4.2.1.0 Machine Name: ATLVPEROWEB02

Segment	Organization	Voter	Designated Proxy	Ballot	NERC Memo
1	Balancing Authority of Northern California	Kevin Smith	Tim Kelley	Negative	No Comment Submitted
1	BC Hydro and Power Authority	Adrian Andreoiu		Abstain	N/A
1	Berkshire Hathaway Energy - MidAmerican Energy Co.	Terry Harbour		Negative	No Comment Submitted
1	Black Hills Corporation	Micah Runner		Negative	No Comment Submitted
1	Bonneville Power Administration	Kamala Rogers-Holliday		Negative	No Comment Submitted
1	CenterPoint Energy Houston Electric, LLC	Daniela Hammons		Negative	No Comment Submitted
1	Central Iowa Power Cooperative	Kevin Lyons		Negative	No Comment Submitted
1	City Utilities of Springfield, Missouri	Michael Buyce		Negative	No Comment Submitted
1	Colorado Springs Utilities	Corey Walker		Negative	No Comment Submitted
1	Con Ed - Consolidated Edison Co. of New York	Dermot Smyth		Negative	No Comment Submitted
1	Dairyland Power Cooperative	Karrie Schuldt		None	N/A
1	Dominion - Dominion Virginia Power	Elizabeth Weber		Negative	No Comment Submitted
1	Duke Energy	Katherine Street		Negative	No Comment Submitted

© 2026 - NERC Ver 4.2.1.0 Machine Name: ATLVPEROWEB02

Segment	Organization	Voter	Designated Proxy	Ballot	NERC Memo
1	Edison International - Southern California Edison Company	Robert Blackney		Negative	No Comment Submitted
1	Entergy	Brian Lindsey		Negative	No Comment Submitted
1	Evergy	Kevin Frick	Alan Kloster	Negative	No Comment Submitted
1	Eversource Energy	Joshua London		Negative	No Comment Submitted
1	Exelon	Daniel Gacek		Affirmative	N/A
1	FirstEnergy - FirstEnergy Corporation	Theresa Ciancio		Negative	No Comment Submitted
1	Georgia Transmission Corporation	Greg Davis	Stephen Stafford	Negative	No Comment Submitted
1	Glencoe Light and Power Commission	Terry Volkmann		Negative	No Comment Submitted
1	Great River Energy	Gordon Pietsch		Negative	No Comment Submitted
1	Hydro One Networks, Inc.	Emma Halilovic	Lidija Efremova	Negative	No Comment Submitted
1	Hydro-Quebec (HQ)	Nicolas Turcotte	Chantal Mazza	Negative	No Comment Submitted
1	IDACORP - Idaho Power Company	Sean Steffensen		Affirmative	N/A
1	Imperial Irrigation District	Jesus Sammy Alcaraz	Denise Sanchez	Negative	No Comment Submitted

© 2026 - NERC Ver 4.2.1.0 Machine Name: ATLVPEROWEB02

Segment	Organization	Voter	Designated Proxy	Ballot	NERC Memo
1	International Transmission Company Holdings Corporation	Michael Moltane	Gail Elliott	Negative	No Comment Submitted
1	Lakeland Electric	Larry Watt		None	N/A
1	Lincoln Electric System	Josh Johnson		Abstain	N/A
1	Long Island Power Authority	Isidoro Behar		Abstain	N/A
1	Los Angeles Department of Water and Power	faranak sarbaz		None	N/A
1	Lower Colorado River Authority	Matt Lewis	James Baldwin	Negative	No Comment Submitted
1	M and A Electric Power Cooperative	William Price		Negative	No Comment Submitted
1	Minnkota Power Cooperative Inc.	Theresa Allard	Andy Fuhrman	Negative	No Comment Submitted
1	Muscatine Power and Water	Andrew Kurriger		None	N/A
1	N.W. Electric Power Cooperative, Inc.	Mark Ramsey		Negative	No Comment Submitted
1	National Grid USA	Michael Jones		Negative	No Comment Submitted
1	NB Power Corporation	Jeffrey Streifling		Abstain	N/A
1	Nebraska Public Power District	Jamison Cawley		Abstain	N/A
1	Network and Security Technologies	Nick Lauriat	Roger Fradenburgh	None	N/A
1	New York Power Authority	Daniel Valle		Negative	No Comment Submitted

© 2026 - NERC Ver 4.2.1.0 Machine Name: ATLVPEROWEB02

Segment	Organization	Voter	Designated Proxy	Ballot	NERC Memo
1	NextEra Energy - Florida Power and Light Co.	Silvia Mitchell		Abstain	N/A
1	NiSource - Northern Indiana Public Service Co.	Alison Nickells		None	N/A
1	Northeast Missouri Electric Power Cooperative	Brett Douglas		Negative	No Comment Submitted
1	OGE Energy - Oklahoma Gas and Electric Co.	Terri Pyle		Affirmative	N/A
1	Oncor Electric Delivery	Byron Booker		Abstain	N/A
1	Pacific Gas and Electric Company	Marco Rios	Bob Cardle	Abstain	N/A
1	Pedernales Electric Cooperative, Inc.	Bradley Collard		None	N/A
1	Platte River Power Authority	Marissa Archie		None	N/A
1	Portland General Electric Co.	Brooke Jockin		Abstain	N/A
1	PPL Electric Utilities Corporation	Michelle McCartney Longo		None	N/A
1	PSEG - Public Service Electric and Gas Co.	Karen Arnold		Abstain	N/A
1	Public Utility District No. 1 of Chelan County	Diane E Landry		Negative	No Comment Submitted
1	Public Utility District No. 1 of Snohomish County	Alyssia Rhoads		Negative	No Comment Submitted
1	Public Utility District No. 2 of Grant County, Washington	Joanne Anderson		Abstain	N/A
1	Sacramento Municipal Utility District	Wei Shao	Tim Kelley	Negative	No Comment Submitted

© 2026 - NERC Ver 4.2.1.0 Machine Name: ATLVPEROWEB02

Segment	Organization	Voter	Designated Proxy	Ballot	NERC Memo
1	Salt River Project	Laura Somak		Negative	No Comment Submitted
1	Santee Cooper	Chris Wagner		Abstain	N/A
1	SaskPower	Wayne Guttormson		None	N/A
1	Seminole Electric Cooperative, Inc.	Kristine Ward		Abstain	N/A
1	Sempra - San Diego Gas and Electric	Mo Derbas	Megan Caulson	Negative	No Comment Submitted
1	Sho-Me Power Electric Cooperative	Olivia Olson		None	N/A
1	Southern Company - Southern Company Services, Inc.	Matt Carden		Negative	No Comment Submitted
1	Southwestern Power Administration	Angela Wheat		Negative	No Comment Submitted
1	Sunflower Electric Power Corporation	Paul Mehlhaff		Abstain	N/A
1	Tacoma Public Utilities (Tacoma, WA)	John Merrell	Jennie Wike	Negative	No Comment Submitted
1	Tallahassee Electric (City of Tallahassee, FL)	Scott Langston		None	N/A
1	Tennessee Valley Authority	David Plumb		Abstain	N/A
1	Tri-State G and T Association, Inc.	Donna Wood		Negative	No Comment Submitted
1	U.S. Bureau of Reclamation	Richard Jackson		Affirmative	N/A
1	Unisource - Tucson Electric Power Co.	Jessica Cordero		Negative	No Comment Submitted

© 2026 - NERC Ver 4.2.1.0 Machine Name: ATLVPEROWEB02

Segment	Organization	Voter	Designated Proxy	Ballot	NERC Memo
1	VELCO -Vermont Electric Power Company, Inc.	Randall Buswell		None	N/A
1	Western Area Power Administration	Ben Hammer		Negative	No Comment Submitted
2	California ISO	Darcy O'Connell		Abstain	N/A
2	Electric Reliability Council of Texas, Inc.	Kennedy Meier		Abstain	N/A
2	ISO New England, Inc.	John Pearson		Negative	No Comment Submitted
2	Midcontinent ISO, Inc.	Bobbi Welch		Abstain	N/A
2	New York Independent System Operator	Gregory Campoli		None	N/A
2	PJM Interconnection, L.L.C.	Thomas Foster	Elizabeth Davis	Abstain	N/A
2	Southwest Power Pool, Inc. (RTO)	Joshua Phillips		Abstain	N/A
3	AEP	Leshel Hutchings		Negative	No Comment Submitted
3	Ameren - Ameren Services	David Jendras Sr		Abstain	N/A
3	APS - Arizona Public Service Co.	Jessica Lopez		Negative	No Comment Submitted
3	Arkansas Electric Cooperative Corporation	Ayslynn Mcavoy		Abstain	N/A
3	Associated Electric Cooperative, Inc.	Todd Bennett		Negative	No Comment Submitted
3	Austin Energy	Lovita Griffin		Negative	No Comment Submitted
3	Avista - Avista Corporation	Scott Kinney		Affirmative	N/A

© 2026 - NERC Ver 4.2.1.0 Machine Name: ATLVPERPOWEB02

Segment	Organization	Voter	Designated Proxy	Ballot	NERC Memo
3	BC Hydro and Power Authority	Ming Jiang		Abstain	N/A
3	Berkshire Hathaway Energy - MidAmerican Energy Co.	Joseph Amato		Negative	No Comment Submitted
3	Black Hills Corporation	Josh Combs	Carly Miller	Negative	No Comment Submitted
3	Bonneville Power Administration	Ron Sporseen		Negative	No Comment Submitted
3	Buckeye Power, Inc.	Tom Schmidt	Ryan Strom	Abstain	N/A
3	Central Electric Power Cooperative (Missouri)	Adam Weber		Negative	No Comment Submitted
3	City Utilities of Springfield, Missouri	Jessica Morrissey		Negative	No Comment Submitted
3	Colorado Springs Utilities	Hillary Dobson		Negative	No Comment Submitted
3	Con Ed - Consolidated Edison Co. of New York	Peter Yost		Negative	No Comment Submitted
3	Dominion - Dominion Virginia Power	Victoria Crider		None	N/A
3	Duke Energy - Florida Power Corporation	Marcelo Pesantez		Negative	No Comment Submitted
3	Edison International - Southern California Edison Company	Romel Aquino		None	N/A
3	Entergy	James Keele		Negative	No Comment Submitted

© 2026 - NERC Ver 4.2.1.0 Machine Name: ATLVPEROWEB02

Segment	Organization	Voter	Designated Proxy	Ballot	NERC Memo
3	Evergy	Marcus Moor	Alan Kloster	Negative	No Comment Submitted
3	Eversource Energy	Vicki O'Leary		Negative	No Comment Submitted
3	Exelon	Kinte Whitehead		Affirmative	N/A
3	FirstEnergy - FirstEnergy Corporation	Aaron Ghodooshim		Negative	No Comment Submitted
3	Georgia System Operations Corporation	Scott McGough		Negative	No Comment Submitted
3	Great River Energy	Michael Brytowski		Negative	No Comment Submitted
3	Imperial Irrigation District	George Kirschner	Denise Sanchez	Negative	No Comment Submitted
3	KAMO Electric Cooperative	Tony Gott		Negative	No Comment Submitted
3	Lincoln Electric System	Sam Christensen		Abstain	N/A
3	Los Angeles Department of Water and Power	Fausto Serratos		Abstain	N/A
3	M and A Electric Power Cooperative	Gary Dollins		Negative	No Comment Submitted
3	MEAG Power	Roger Brand	Rebika Yitna	Negative	No Comment Submitted
3	MGE Energy - Madison Gas and Electric Co.	Benjamin Widder		Negative	No Comment Submitted
3	Muscatine Power and Water	Seth Shoemaker		Negative	No Comment Submitted

© 2026 - NERC Ver 4.2.1.0 Machine Name: ATLVPEROWEB02

Segment	Organization	Voter	Designated Proxy	Ballot	NERC Memo
3	National Grid USA	Brian Shanahan		Negative	No Comment Submitted
3	Nebraska Public Power District	Tony Eddleman		Abstain	N/A
3	New York Power Authority	Richard Machado		Negative	No Comment Submitted
3	NextEra Energy - Florida Power and Light Co.	Karen Demos		Negative	No Comment Submitted
3	NiSource - Northern Indiana Public Service Co.	Steven Taddeucci		Negative	No Comment Submitted
3	Northeast Missouri Electric Power Cooperative	Skyler Wiegmann		None	N/A
3	Northern California Power Agency	Michael Whitney	Chris Carnesi	None	N/A
3	NW Electric Power Cooperative, Inc.	Heath Henry		Negative	No Comment Submitted
3	OGE Energy - Oklahoma Gas and Electric Co.	Donald Hargrove		Affirmative	N/A
3	Omaha Public Power District	David Heins		Negative	No Comment Submitted
3	Orlando Utilities Commission	Ballard Mutters		None	N/A
3	Pacific Gas and Electric Company	Sandra Ellis	Bob Cardle	Abstain	N/A
3	Platte River Power Authority	Richard Kiess		None	N/A
3	PNM Resources - Public Service Company of New Mexico	Amy Wesselkamper		Negative	No Comment Submitted

© 2026 - NERC Ver 4.2.1.0 Machine Name: ATLVPEROWEB02

Segment	Organization	Voter	Designated Proxy	Ballot	NERC Memo
3	Portland General Electric Co.	Mayra Franco		Abstain	N/A
3	PPL - Louisville Gas and Electric Co.	James Frank		None	N/A
3	PSEG - Public Service Electric and Gas Co.	Christopher Murphy		Abstain	N/A
3	Public Utility District No. 1 of Chelan County	Joyce Gundry		Negative	No Comment Submitted
3	Puget Sound Energy, Inc.	Kelley Sargent		Affirmative	N/A
3	Sacramento Municipal Utility District	Nicole Looney	Tim Kelley	Negative	No Comment Submitted
3	Salt River Project	Mathew Weber		Negative	No Comment Submitted
3	Santee Cooper	Vicky Budreau		Abstain	N/A
3	Seminole Electric Cooperative, Inc.	Marc Sedor		None	N/A
3	Sempra - San Diego Gas and Electric	Bryan Bennett		Negative	No Comment Submitted
3	Sho-Me Power Electric Cooperative	Jarrod Murdaugh		Negative	No Comment Submitted
3	Snohomish County PUD No. 1	Holly Chaney		Negative	No Comment Submitted
3	Southern Company - Alabama Power Company	Joel Dembowski		Negative	No Comment Submitted
3	Southern Indiana Gas and Electric Co.	Ryan Snyder		Negative	No Comment Submitted
3	Tennessee Valley Authority	Ian Grant		Abstain	N/A

© 2026 - NERC Ver 4.0.1.0 Machine Name: ATLVPEROWEB02

Segment	Organization	Voter	Designated Proxy	Ballot	NERC Memo
3	Tri-State G and T Association, Inc.	Ryan Walter		Negative	No Comment Submitted
3	TXNM Energy	Scott Thompson		None	N/A
4	Alliant Energy Corporation Services, Inc.	Larry Heckert		None	N/A
4	Arkansas Electric Cooperative Corporation	Jenni Sudduth		None	N/A
4	Buckeye Power, Inc.	Jason Procuniar	Ryan Strom	Abstain	N/A
4	City Utilities of Springfield, Missouri	Jerry Bradshaw		Negative	No Comment Submitted
4	FirstEnergy - FirstEnergy Corporation	Mark Garza		Negative	No Comment Submitted
4	Georgia System Operations Corporation	Katrina Lyons	Jason Snodgrass	Negative	No Comment Submitted
4	Northern California Power Agency	Marty Hostler		None	N/A
4	Oklahoma Municipal Power Authority	Michael Watt		None	N/A
4	Public Utility District No. 1 of Snohomish County	John D. Martinsen		Negative	No Comment Submitted
4	Public Utility District No. 2 of Grant County, Washington	Karla Weaver		Abstain	N/A
4	Sacramento Municipal Utility District	Foung Mua	Tim Kelley	Negative	No Comment Submitted
4	Utility Services, Inc.	Carver Powers		Negative	No Comment Submitted
4	WEC Energy Group, Inc.	Matthew Beilfuss		None	N/A

© 2026 - NERC Ver 4.2.1.0 Machine Name: ATLVPEROWEB02

Segment	Organization	Voter	Designated Proxy	Ballot	NERC Memo
4	Western Power Pool	Kevin Conway		Negative	No Comment Submitted
5	AEP	Thomas Foltz		Negative	No Comment Submitted
5	Ameren - Ameren Missouri	Sam Dwyer		Abstain	N/A
5	APS - Arizona Public Service Co.	Andrew Smith		Negative	No Comment Submitted
5	Associated Electric Cooperative, Inc.	Chuck Booth		Negative	No Comment Submitted
5	Austin Energy	Michael Dillard		Negative	No Comment Submitted
5	Avista - Avista Corporation	Glen Farmer		None	N/A
5	BC Hydro and Power Authority	Quincy Wang		Abstain	N/A
5	Berkshire Hathaway - NV Energy	Dwanique Spiller		Negative	No Comment Submitted
5	Black Hills Corporation	Sheila Suurmeier		Negative	No Comment Submitted
5	Buckeye Power, Inc.	Kevin Zemanek	Ryan Strom	Abstain	N/A
5	California Department of Water Resources	ASM Mostafa		None	N/A
5	CMS Energy - Consumers Energy Company	David Greyerbiehl		None	N/A
5	Colorado Springs Utilities	Jeffrey Icke		Negative	No Comment Submitted

© 2026 - NERC Ver 4.2.1.0 Machine Name: ATLVPEROWEB02

Segment	Organization	Voter	Designated Proxy	Ballot	NERC Memo
5	Con Ed - Consolidated Edison Co. of New York	Michelle Pagano		Negative	No Comment Submitted
5	Constellation	Alison MacKellar		Abstain	N/A
5	Cowlitz County PUD	Deanna Carlson		Negative	No Comment Submitted
5	Dairyland Power Cooperative	Tommy Drea		Negative	No Comment Submitted
5	Dominion - Dominion Resources, Inc.	Anna Salmon		Negative	No Comment Submitted
5	DTE Energy - Detroit Edison Company	Mohamad Elhusseini		None	N/A
5	Duke Energy	Dale Goodwine		Negative	No Comment Submitted
5	Edison International - Southern California Edison Company	Selene Willis		Negative	No Comment Submitted
5	Electric Power Supply Association	Bill Zuretti		None	N/A
5	Entergy - Entergy Services, Inc.	Gail Golden		Negative	No Comment Submitted
5	Evergy	Jeremy Harris	Alan Kloster	Negative	No Comment Submitted
5	FirstEnergy - FirstEnergy Corporation	Matthew Augustin		Negative	No Comment Submitted
5	Great River Energy	Jacalynn Bentz		None	N/A
5	Greybeard Compliance Services, LLC	Mike Gabriel		None	N/A

© 2026 - NERC Ver 4.2.1.0 Machine Name: ATLVPEROWEB02

Segment	Organization	Voter	Designated Proxy	Ballot	NERC Memo
5	Hydro-Quebec (HQ)	Junji Yamaguchi	Chantal Mazza	Negative	No Comment Submitted
5	Imperial Irrigation District	Tino Zaragoza	Denise Sanchez	Negative	No Comment Submitted
5	JEA	John Babik		None	N/A
5	Lincoln Electric System	Brittany Millard		Abstain	N/A
5	Los Angeles Department of Water and Power	Robert Kerrigan		None	N/A
5	Lower Colorado River Authority	Teresa Krabe		Negative	No Comment Submitted
5	National Grid USA	Robin Berry		Negative	No Comment Submitted
5	NB Power Corporation - New Brunswick Power Transmission Corporation	Fon Hiew		Abstain	N/A
5	Nebraska Public Power District	Ronald Bender		Abstain	N/A
5	New York Power Authority	Zahid Qayyum		Negative	No Comment Submitted
5	NextEra Energy	Richard Vendetti		Negative	No Comment Submitted
5	NiSource - Northern Indiana Public Service Co.	Kathryn Tackett		Negative	No Comment Submitted
5	Northern California Power Agency	Jeremy Lawson	Chris Carnesi	None	N/A
5	NRG - NRG Energy, Inc.	Patricia Lynch		Abstain	N/A
5	OGE Energy - Oklahoma Gas and Electric Co.	Patrick Wells		Affirmative	N/A

© 2026 - NERC Ver 4.2.1.0 Machine Name: ATLVPEROWEB02

Segment	Organization	Voter	Designated Proxy	Ballot	NERC Memo
5	Oglethorpe Power Corporation	Donna Johnson		Negative	No Comment Submitted
5	Oklahoma Municipal Power Authority	Patrick Tuttle		None	N/A
5	Omaha Public Power District	Kayleigh Wilkerson		Negative	No Comment Submitted
5	OTP - Otter Tail Power Company	Stacy Wahlund		Negative	No Comment Submitted
5	Pacific Gas and Electric Company	Tyler Brun	Bob Cardle	Abstain	N/A
5	Platte River Power Authority	Jon Osell		Negative	No Comment Submitted
5	Portland General Electric Co.	Ryan Olson		None	N/A
5	PPL - Louisville Gas and Electric Co.	Julie Hostrander		None	N/A
5	PSEG Nuclear LLC	Tim Kucey		Abstain	N/A
5	Public Utility District No. 1 of Chelan County	Rebecca Wickel		Negative	No Comment Submitted
5	Public Utility District No. 1 of Snohomish County	Becky Burden		Negative	No Comment Submitted
5	Sacramento Municipal Utility District	Ryder Couch	Tim Kelley	Negative	No Comment Submitted
5	Salt River Project	Thomas Johnson		Negative	No Comment Submitted
5	Santee Cooper	Carey Salisbury		Abstain	N/A
5	Seminole Electric Cooperative, Inc.	Melanie Wong		Abstain	N/A

© 2026 - NERC Ver 4.2.1.0 Machine Name: ATLVPEROWEB02

Segment	Organization	Voter	Designated Proxy	Ballot	NERC Memo
5	Sempra - San Diego Gas and Electric	Jennifer Wright		Negative	No Comment Submitted
5	Southern Company - Southern Company Generation	Leslie Burke		Negative	No Comment Submitted
5	Southern Indiana Gas and Electric Co.	Larry Rogers		Negative	No Comment Submitted
5	Tennessee Valley Authority	Darren Boehm		None	N/A
5	Tri-State G and T Association, Inc.	Sergio Banuelos		Negative	No Comment Submitted
5	U.S. Bureau of Reclamation	Wendy Kalidass		Affirmative	N/A
5	Xcel Energy, Inc.	Gerry Huitt		Negative	No Comment Submitted
6	AEP	Mathew Miller		Negative	No Comment Submitted
6	Ameren - Ameren Services	Robert Quinlivan		Abstain	N/A
6	APS - Arizona Public Service Co.	Marcus Bortman		Negative	No Comment Submitted
6	Arkansas Electric Cooperative Corporation	Bruce Walkup		Abstain	N/A
6	Associated Electric Cooperative, Inc.	Brian Ackermann		Negative	No Comment Submitted
6	Austin Energy	Imane Mrini		Negative	No Comment Submitted

© 2026 - NERC Ver 4.2.1.0 Machine Name: ATLVPEROWEB02

Segment	Organization	Voter	Designated Proxy	Ballot	NERC Memo
6	Berkshire Hathaway - PacifiCorp	Lindsay Wickizer		Negative	No Comment Submitted
6	Black Hills Corporation	Rachel Schuldt		Negative	No Comment Submitted
6	Bonneville Power Administration	Tanner Brier		Negative	No Comment Submitted
6	Con Ed - Consolidated Edison Co. of New York	Jason Chandler		Negative	No Comment Submitted
6	Constellation	Kimberly Turco		Abstain	N/A
6	Dominion - Dominion Resources, Inc.	Sean Bodkin		Negative	No Comment Submitted
6	Duke Energy	John Sturgeon		Negative	No Comment Submitted
6	Edison International - Southern California Edison Company	Stephanie Kenny		Negative	No Comment Submitted
6	Entergy	Julie Hall		Negative	No Comment Submitted
6	Evergy	Tiffany Lake	Alan Kloster	Negative	No Comment Submitted
6	FirstEnergy - FirstEnergy Corporation	Stacey Sheehan		Negative	No Comment Submitted
6	Great River Energy	Brian Meloy		Negative	No Comment Submitted
6	Imperial Irrigation District	Diana Torres	Denise Sanchez	Negative	No Comment Submitted

© 2026 - NERC Ver 4.2.1.0 Machine Name: ATLVPEROWEB02

Segment	Organization	Voter	Designated Proxy	Ballot	NERC Memo
6	Lincoln Electric System	Eric Ruskamp		Abstain	N/A
6	Los Angeles Department of Water and Power	Anton Vu		None	N/A
6	Muscatine Power and Water	Nicholas Burns		Negative	No Comment Submitted
6	New York Power Authority	Shelly Dineen		Negative	No Comment Submitted
6	NextEra Energy - Florida Power and Light Co.	Justin Welty		Negative	No Comment Submitted
6	NiSource - Northern Indiana Public Service Co.	Dmitriy Bazylyuk		Negative	No Comment Submitted
6	Northern California Power Agency	Dennis Sismaet	Chris Carnesi	None	N/A
6	OGE Energy - Oklahoma Gas and Electric Co.	Ashley F Stringer	Dane Rogers	Affirmative	N/A
6	Omaha Public Power District	Shonda Markus		Negative	No Comment Submitted
6	Platte River Power Authority	Sabrina Martz		Negative	No Comment Submitted
6	Portland General Electric Co.	Stefanie Burke		Abstain	N/A
6	Powerex Corporation	Raj Hundal		None	N/A
6	PPL - Louisville Gas and Electric Co.	Linn Oelker		None	N/A
6	PSEG - PSEG Energy Resources and Trade LLC	Laura Wu		Abstain	N/A
6	Public Utility District No. 1 of Chelan County	Anne Kronshage		Negative	No Comment Submitted

© 2026 - NERC Ver 4.2.1.0 Machine Name: ATLVPEROWEB02

Segment	Organization	Voter	Designated Proxy	Ballot	NERC Memo
6	Sacramento Municipal Utility District	Charles Norton	Tim Kelley	Negative	No Comment Submitted
6	Salt River Project	Timothy Singh		Negative	No Comment Submitted
6	Santee Cooper	Marty Watson		Abstain	N/A
6	Seattle City Light	Daren Brubaker		None	N/A
6	Seminole Electric Cooperative, Inc.	Bret Galbraith		None	N/A
6	Snohomish County PUD No. 1	John Liang		Negative	No Comment Submitted
6	Southern Company - Southern Company Generation	Ron Carlsen		Negative	No Comment Submitted
6	Southern Indiana Gas and Electric Co.	Kati Barr		Negative	No Comment Submitted
6	Tennessee Valley Authority	Armando Rodriguez		None	N/A
6	Western Area Power Administration	Jennifer Neville		Negative	No Comment Submitted
10	Midwest Reliability Organization	Mark Flanary		Affirmative	N/A
10	New York State Reliability Council	Wesley Yeomans		None	N/A
10	Northeast Power Coordinating Council	Gerry Dunbar		Abstain	N/A
10	ReliabilityFirst	Tyler Schwendiman		Affirmative	N/A
10	SERC Reliability Corporation	Dave Krueger		Abstain	N/A

© 2026 - NERC Ver 4.2.1.0 Machine Name: ATLVPEROWEB02

Segment	Organization	Voter	Designated Proxy	Ballot	NERC Memo
10	Texas Reliability Entity, Inc.	Rachel Coyne		Affirmative	N/A
10	Western Electricity Coordinating Council	Steven Rueckert		Negative	No Comment Submitted

Previous 1 Next

Showing 1 to 282 of 282 entries

© 2026 - NERC Ver 4.2.1.0 Machine Name: ATLVPEROWEB02

BALLOT RESULTS

Comment: View Comment Results (/CommentResults/Index/327)
Ballot Name: Project 2023-06 CIP-014 Risk Assessment Refinement Implementation Plan IN 1 OT
Voting Start Date: 6/24/2024 12:01:00 AM
Voting End Date: 7/3/2024 8:00:00 PM
Ballot Type: OT
Ballot Activity: IN
Ballot Series: 1
Total # Votes: 241
Total Ballot Pool: 288
Quorum: 83.68
Quorum Established Date: 7/3/2024 1:44:54 PM
Weighted Segment Value: 27.14

Segment	Ballot Pool	Segment Weight	Affirmative Votes	Affirmative Fraction	Negative Votes w/ Comment	Negative Fraction w/ Comment	Negative Votes w/o Comment	Abstain	No Vote
Segment: 1	84	1	14	0.222	49	0.778	0	8	13
Segment: 2	7	0.1	0	0	1	0.1	0	5	1
Segment: 3	67	1	13	0.245	40	0.755	0	6	8
Segment: 4	14	0.7	2	0.2	5	0.5	0	2	5
Segment: 5	64	1	12	0.267	33	0.733	0	6	13
Segment: 6	45	1	9	0.25	27	0.75	0	3	6
Segment: 7	0	0	0	0	0	0	0	0	0
Segment: 8	0	0	0	0	0	0	0	0	0

© 2026 - NERC Ver 4.2.1.0 Machine Name: ATLVPEROWEB02

Segment	Ballot Pool	Segment Weight	Affirmative Votes	Affirmative Fraction	Negative Votes w/ Comment	Negative Fraction w/ Comment	Negative Votes w/o Comment	Abstain	No Vote
Segment: 9	0	0	0	0	0	0	0	0	0
Segment: 10	7	0.3	2	0.2	1	0.1	0	3	1
Totals:	288	5.1	52	1.384	156	3.716	0	33	47

BALLOT POOL MEMBERS

Show All entries Search: Search

Segment	Organization	Voter	Designated Proxy	Ballot	NERC Memo
1	AEP - AEP Service Corporation	Dennis Sauriol		Negative	Comments Submitted
1	Allete - Minnesota Power, Inc.	Hillary Creurer		Negative	Comments Submitted
1	Ameren - Ameren Services	Tamara Evey		Negative	Comments Submitted
1	American Transmission Company, LLC	Amy Wilke		None	N/A
1	APS - Arizona Public Service Co.	Daniela Atanasovski		Affirmative	N/A
1	Arkansas Electric Cooperative Corporation	Emily Corley		Abstain	N/A
1	Associated Electric Cooperative, Inc.	Mark Riley		Negative	Third-Party Comments
1	Austin Energy	Thomas Standifur		Negative	Comments Submitted

© 2026 - NERC Ver 4.2.1.0 Machine Name: ATLVPEROWEB02

Segment	Organization	Voter	Designated Proxy	Ballot	NERC Memo
1	Balancing Authority of Northern California	Kevin Smith	Tim Kelley	Negative	Comments Submitted
1	BC Hydro and Power Authority	Adrian Andreoiu		Abstain	N/A
1	Berkshire Hathaway Energy - MidAmerican Energy Co.	Terry Harbour		Negative	Comments Submitted
1	Black Hills Corporation	Micah Runner		Negative	Comments Submitted
1	Bonneville Power Administration	Kamala Rogers-Holliday		Negative	Comments Submitted
1	CenterPoint Energy Houston Electric, LLC	Daniela Hammons		Negative	Comments Submitted
1	Central Iowa Power Cooperative	Kevin Lyons		Negative	Third-Party Comments
1	City Utilities of Springfield, Missouri	Michael Buyce		Negative	Third-Party Comments
1	Colorado Springs Utilities	Corey Walker		Negative	Third-Party Comments
1	Con Ed - Consolidated Edison Co. of New York	Dermot Smyth		Negative	Third-Party Comments
1	Dairyland Power Cooperative	Karrie Schuldt		None	N/A
1	Dominion - Dominion Virginia Power	Elizabeth Weber		Affirmative	N/A
1	Duke Energy	Katherine Street		Negative	Third-Party Comments
1	Edison International - Southern California Edison Company	Robert Blackney		Negative	Comments Submitted
1	Entergy	Brian Lindsey		Affirmative	N/A
1	Evergy	Kevin Frick	Alan Kloster	Negative	Comments Submitted

© 2026 - NERC Ver 4.2.1.0 Machine Name: ATLVPEROWEB02

Segment	Organization	Voter	Designated Proxy	Ballot	NERC Memo
1	Eversource Energy	Joshua London		Negative	Comments Submitted
1	Exelon	Daniel Gacek		Affirmative	N/A
1	FirstEnergy - FirstEnergy Corporation	Theresa Ciancio		Affirmative	N/A
1	Georgia Transmission Corporation	Greg Davis	Stephen Stafford	Negative	Comments Submitted
1	Glencoe Light and Power Commission	Terry Volkmann		Negative	Third-Party Comments
1	Great River Energy	Gordon Pietsch		Negative	Third-Party Comments
1	Hydro One Networks, Inc.	Emma Halilovic	Lidija Efremova	Negative	Comments Submitted
1	Hydro-Quebec (HQ)	Nicolas Turcotte	Chantal Mazza	Negative	Comments Submitted
1	IDACORP - Idaho Power Company	Sean Steffensen		Affirmative	N/A
1	Imperial Irrigation District	Jesus Sammy Alcaraz	Denise Sanchez	Affirmative	N/A
1	International Transmission Company Holdings Corporation	Michael Moltane	Gail Elliott	Negative	Comments Submitted
1	Lakeland Electric	Larry Watt		None	N/A
1	Lincoln Electric System	Josh Johnson		Affirmative	N/A
1	Long Island Power Authority	Isidoro Behar		Negative	Third-Party Comments
1	Los Angeles Department of Water and Power	faranak sarbaz		None	N/A
1	Lower Colorado River Authority	Matt Lewis	James Baldwin	Negative	Comments Submitted
1	M and A Electric Power Cooperative	William Price		Negative	Third-Party Comments
1	Manitoba Hydro	Nazra Gladu		Negative	Third-Party Comments

© 2026 - NERC Ver 4.2.1.0 Machine Name: ATLVPEROWEB02

Segment	Organization	Voter	Designated Proxy	Ballot	NERC Memo
1	Minnkota Power Cooperative Inc.	Theresa Allard	Andy Fuhrman	Negative	Comments Submitted
1	Muscatine Power and Water	Andrew Kurriger		None	N/A
1	N.W. Electric Power Cooperative, Inc.	Mark Ramsey		Negative	Third-Party Comments
1	National Grid USA	Michael Jones		Negative	Third-Party Comments
1	NB Power Corporation	Jeffrey Streifling		Affirmative	N/A
1	Nebraska Public Power District	Jamison Cawley		Negative	Third-Party Comments
1	Network and Security Technologies	Nick Lauriat	Roger Fradenburgh	None	N/A
1	New York Power Authority	Daniel Valle		Negative	Third-Party Comments
1	NextEra Energy - Florida Power and Light Co.	Silvia Mitchell		Negative	Comments Submitted
1	NiSource - Northern Indiana Public Service Co.	Alison Nickells		None	N/A
1	Northeast Missouri Electric Power Cooperative	Brett Douglas		Negative	Third-Party Comments
1	OGE Energy - Oklahoma Gas and Electric Co.	Terri Pyle		Affirmative	N/A
1	Oncor Electric Delivery	Byron Booker		Abstain	N/A
1	OTP - Otter Tail Power Company	Charles Wicklund		Negative	Third-Party Comments
1	Pacific Gas and Electric Company	Marco Rios	Bob Cardle	Abstain	N/A
1	Pedernales Electric Cooperative, Inc.	Bradley Collard		None	N/A
1	Platte River Power Authority	Marissa Archie		None	N/A

© 2026 - NERC Ver 4.2.1.0 Machine Name: ATLVPEROWEB02

Segment	Organization	Voter	Designated Proxy	Ballot	NERC Memo
1	Portland General Electric Co.	Brooke Jockin		Abstain	N/A
1	PPL Electric Utilities Corporation	Michelle McCartney Longo		Negative	Comments Submitted
1	PSEG - Public Service Electric and Gas Co.	Karen Arnold		Negative	Third-Party Comments
1	Public Utility District No. 1 of Chelan County	Diane E Landry		Affirmative	N/A
1	Public Utility District No. 1 of Snohomish County	Alyssia Rhoads		Negative	Third-Party Comments
1	Public Utility District No. 2 of Grant County, Washington	Joanne Anderson		Abstain	N/A
1	Sacramento Municipal Utility District	Wei Shao	Tim Kelley	Negative	Comments Submitted
1	Salt River Project	Laura Somak		Negative	Comments Submitted
1	Santee Cooper	Chris Wagner		Negative	Comments Submitted
1	SaskPower	Wayne Guttormson		None	N/A
1	Seminole Electric Cooperative, Inc.	Kristine Ward		Abstain	N/A
1	Sempra - San Diego Gas and Electric	Mo Derbas	Megan Caulson	Negative	Third-Party Comments
1	Sho-Me Power Electric Cooperative	Olivia Olson		None	N/A
1	Southern Company - Southern Company Services, Inc.	Matt Carden		Affirmative	N/A
1	Southwestern Power Administration	Angela Wheat		Negative	Third-Party Comments
1	Sunflower Electric Power Corporation	Paul Mehlhaff		Abstain	N/A

Segment	Organization	Voter	Designated Proxy	Ballot	NERC Memo
1	Tacoma Public Utilities (Tacoma, WA)	John Merrell	Jennie Wike	Negative	Comments Submitted
1	Tallahassee Electric (City of Tallahassee, FL)	Scott Langston		None	N/A
1	Tennessee Valley Authority	David Plumb		Negative	Comments Submitted
1	Tri-State G and T Association, Inc.	Donna Wood		Affirmative	N/A
1	U.S. Bureau of Reclamation	Richard Jackson		Affirmative	N/A
1	Unisource - Tucson Electric Power Co.	Jessica Cordero		Negative	Comments Submitted
1	VELCO -Vermont Electric Power Company, Inc.	Randall Buswell		None	N/A
1	Western Area Power Administration	Ben Hammer		Negative	Comments Submitted
1	Xcel Energy, Inc.	Eric Barry		Negative	Third-Party Comments
2	California ISO	Darcy O'Connell		Abstain	N/A
2	Electric Reliability Council of Texas, Inc.	Kennedy Meier		Abstain	N/A
2	ISO New England, Inc.	John Pearson		Negative	Comments Submitted
2	Midcontinent ISO, Inc.	Bobbi Welch		Abstain	N/A
2	New York Independent System Operator	Gregory Campoli		None	N/A
2	PJM Interconnection, L.L.C.	Thomas Foster	Elizabeth Davis	Abstain	N/A
2	Southwest Power Pool, Inc. (RTO)	Joshua Phillips		Abstain	N/A
3	AEP	Leshel Hutchings		Negative	Comments Submitted
3	Ameren - Ameren Services	David Jendras Sr		Negative	Comments Submitted

© 2026 - NERC Ver 4.2.1.0 Machine Name: ATLVPEROWEB02

Segment	Organization	Voter	Designated Proxy	Ballot	NERC Memo
3	APS - Arizona Public Service Co.	Jessica Lopez		Affirmative	N/A
3	Arkansas Electric Cooperative Corporation	Ayslynn Mcavoy		Abstain	N/A
3	Associated Electric Cooperative, Inc.	Todd Bennett		Negative	Third-Party Comments
3	Austin Energy	Lovita Griffin		Negative	Comments Submitted
3	Avista - Avista Corporation	Robert Follini		Affirmative	N/A
3	BC Hydro and Power Authority	Ming Jiang		Abstain	N/A
3	Berkshire Hathaway Energy - MidAmerican Energy Co.	Joseph Amato		Negative	Comments Submitted
3	Black Hills Corporation	Josh Combs	Carly Miller	Negative	Comments Submitted
3	Bonneville Power Administration	Ron Sporseen		Negative	Comments Submitted
3	Buckeye Power, Inc.	Tom Schmidt	Ryan Strom	Abstain	N/A
3	Central Electric Power Cooperative (Missouri)	Adam Weber		Negative	Third-Party Comments
3	City Utilities of Springfield, Missouri	Jessica Morrissey		Negative	Third-Party Comments
3	Colorado Springs Utilities	Hillary Dobson		Negative	Third-Party Comments
3	Con Ed - Consolidated Edison Co. of New York	Peter Yost		Negative	Third-Party Comments
3	Dominion - Dominion Virginia Power	Bill Garvey		Affirmative	N/A
3	Duke Energy - Florida Power Corporation	Marcelo Pesantez		Negative	Third-Party Comments

© 2026 - NERC Ver 4.2.1.0 Machine Name: ATLVPEROWEB02

Segment	Organization	Voter	Designated Proxy	Ballot	NERC Memo
3	Edison International - Southern California Edison Company	Romel Aquino		None	N/A
3	Entergy	James Keele		Affirmative	N/A
3	Evergy	Marcus Moor	Alan Kloster	Negative	Comments Submitted
3	Eversource Energy	Vicki O'Leary		Negative	Comments Submitted
3	Exelon	Kinte Whitehead		Affirmative	N/A
3	FirstEnergy - FirstEnergy Corporation	Aaron Ghodooshim		Affirmative	N/A
3	Georgia System Operations Corporation	Scott McGough		Negative	Third-Party Comments
3	Great River Energy	Michael Brytowski		Negative	Third-Party Comments
3	Imperial Irrigation District	George Kirschner	Denise Sanchez	Affirmative	N/A
3	KAMO Electric Cooperative	Tony Gott		Negative	Third-Party Comments
3	Lincoln Electric System	Sam Christensen		Affirmative	N/A
3	Los Angeles Department of Water and Power	Fausto Serratos		Abstain	N/A
3	M and A Electric Power Cooperative	Gary Dollins		Negative	Third-Party Comments
3	MEAG Power	Roger Brand	Rebika Yitna	Negative	Comments Submitted
3	MGE Energy - Madison Gas and Electric Co.	Benjamin Widder		Negative	Third-Party Comments
3	Muscatine Power and Water	Seth Shoemaker		Negative	Third-Party Comments
3	National Grid USA	Brian Shanahan		Negative	Third-Party Comments
3	Nebraska Public Power District	Tony Eddleman		Negative	Third-Party Comments

© 2026 - NERC Ver 4.2.1.0 Machine Name: ATLVPEROWEB02

Segment	Organization	Voter	Designated Proxy	Ballot	NERC Memo
3	New York Power Authority	Richard Machado		Negative	Third-Party Comments
3	NextEra Energy - Florida Power and Light Co.	Karen Demos		Negative	Comments Submitted
3	NiSource - Northern Indiana Public Service Co.	Steven Taddeucci		Negative	Comments Submitted
3	Northeast Missouri Electric Power Cooperative	Skyler Wiegmann		None	N/A
3	Northern California Power Agency	Michael Whitney	Chris Carnesi	None	N/A
3	NW Electric Power Cooperative, Inc.	Heath Henry		Negative	Third-Party Comments
3	OGE Energy - Oklahoma Gas and Electric Co.	Donald Hargrove		Affirmative	N/A
3	Omaha Public Power District	David Heins		Negative	Third-Party Comments
3	Orlando Utilities Commission	Ballard Mutters		None	N/A
3	OTP - Otter Tail Power Company	Wendi Olson		Negative	Third-Party Comments
3	Pacific Gas and Electric Company	Sandra Ellis	Bob Cardle	Abstain	N/A
3	Platte River Power Authority	Richard Kiess		None	N/A
3	PNM Resources - Public Service Company of New Mexico	Amy Wesselkamper		Negative	Comments Submitted
3	Portland General Electric Co.	Mayra Franco		Abstain	N/A
3	PPL - Louisville Gas and Electric Co.	James Frank		Negative	Comments Submitted
3	PSEG - Public Service Electric and Gas Co.	Christopher Mroiwe		Negative	Third-Party Comments

© 2026 - NERC Ver 4.2.1.0 Machine Name: ATLVPERQWEB02

Segment	Organization	Voter	Designated Proxy	Ballot	NERC Memo
3	Public Utility District No. 1 of Chelan County	Joyce Gundry		Affirmative	N/A
3	Puget Sound Energy, Inc.	Kelley Sargent		Affirmative	N/A
3	Sacramento Municipal Utility District	Nicole Looney	Tim Kelley	Negative	Comments Submitted
3	Salt River Project	Mathew Weber		Negative	Comments Submitted
3	Santee Cooper	Vicky Budreau		Negative	Comments Submitted
3	Seminole Electric Cooperative, Inc.	Marc Sedor		None	N/A
3	Sempra - San Diego Gas and Electric	Bryan Bennett		Negative	Third-Party Comments
3	Sho-Me Power Electric Cooperative	Jarrod Murdaugh		Negative	Third-Party Comments
3	Snohomish County PUD No. 1	Holly Chaney		Negative	Third-Party Comments
3	Southern Company - Alabama Power Company	Joel Dembowski		Affirmative	N/A
3	Southern Indiana Gas and Electric Co.	Ryan Snyder		Negative	Comments Submitted
3	Tennessee Valley Authority	Ian Grant		Negative	Comments Submitted
3	Tri-State G and T Association, Inc.	Ryan Walter		Affirmative	N/A
3	TXNM Energy	Scott Thompson		None	N/A
3	Xcel Energy, Inc.	Nicholas Friebel		None	N/A
4	Alliant Energy Corporation Services, Inc.	Larry Heckert		None	N/A
4	Arkansas Electric Cooperative Corporation	Jenni Sudduth		None	N/A
4	Buckeye Power, Inc.	Jason Procuniar	Ryan Strom	Abstain	N/A

© 2026 - NERC Ver 4.2.1.0 Machine Name: ATLVPEROWEB02

Segment	Organization	Voter	Designated Proxy	Ballot	NERC Memo
4	City Utilities of Springfield, Missouri	Jerry Bradshaw		Negative	Third-Party Comments
4	FirstEnergy - FirstEnergy Corporation	Mark Garza		Affirmative	N/A
4	Georgia System Operations Corporation	Katrina Lyons	Jason Snodgrass	Negative	Third-Party Comments
4	Northern California Power Agency	Marty Hostler		None	N/A
4	Oklahoma Municipal Power Authority	Michael Watt		None	N/A
4	Public Utility District No. 1 of Snohomish County	John D. Martinsen		Negative	Third-Party Comments
4	Public Utility District No. 2 of Grant County, Washington	Karla Weaver		Abstain	N/A
4	Sacramento Municipal Utility District	Foung Mua	Tim Kelley	Negative	Comments Submitted
4	Utility Services, Inc.	Carver Powers		Affirmative	N/A
4	WEC Energy Group, Inc.	Matthew Beilfuss		None	N/A
4	Western Power Pool	Kevin Conway		Negative	Comments Submitted
5	AEP	Thomas Foltz		Negative	Comments Submitted
5	Ameren - Ameren Missouri	Sam Dwyer		Negative	Comments Submitted
5	APS - Arizona Public Service Co.	Andrew Smith		Affirmative	N/A
5	Associated Electric Cooperative, Inc.	Chuck Booth		Negative	Third-Party Comments
5	Austin Energy	Michael Dillard		Negative	Comments Submitted
5	Avista - Avista Corporation	Glen Farmer		None	N/A

© 2026 - NERC Ver 4.2.1.0 Machine Name: ATLVPEROWEB02

Segment	Organization	Voter	Designated Proxy	Ballot	NERC Memo
5	BC Hydro and Power Authority	Quincy Wang		Abstain	N/A
5	Berkshire Hathaway - NV Energy	Dwanique Spiller		Negative	Comments Submitted
5	Black Hills Corporation	Sheila Suurmeier		Negative	Comments Submitted
5	Buckeye Power, Inc.	Kevin Zemanek	Ryan Strom	Abstain	N/A
5	California Department of Water Resources	ASM Mostafa		None	N/A
5	CMS Energy - Consumers Energy Company	David Greyerbiehl		None	N/A
5	Colorado Springs Utilities	Jeffrey Icke		Negative	Third-Party Comments
5	Con Ed - Consolidated Edison Co. of New York	Michelle Pagano		Negative	Third-Party Comments
5	Constellation	Alison MacKellar		Abstain	N/A
5	Cowlitz County PUD	Deanna Carlson		Negative	Third-Party Comments
5	Dairyland Power Cooperative	Tommy Drea		Negative	Third-Party Comments
5	Dominion - Dominion Resources, Inc.	Anna Salmon		Affirmative	N/A
5	DTE Energy - Detroit Edison Company	Mohamad Elhusseini		None	N/A
5	Duke Energy	Dale Goodwine		Negative	Third-Party Comments
5	Edison International - Southern California Edison Company	Selene Willis		Negative	Comments Submitted
5	Electric Power Supply Association	Bill Zuretti		None	N/A
5	Entergy - Entergy Services, Inc.	Gail Golden		Affirmative	N/A

© 2026 - NERC Ver 4.2.1.0 Machine Name: ATLVPEROWEB02

Segment	Organization	Voter	Designated Proxy	Ballot	NERC Memo
5	Evergy	Jeremy Harris	Alan Kloster	Negative	Comments Submitted
5	FirstEnergy - FirstEnergy Corporation	Matthew Augustin		Affirmative	N/A
5	Great River Energy	Jacalynn Bentz		None	N/A
5	Greybeard Compliance Services, LLC	Mike Gabriel		None	N/A
5	Hydro-Quebec (HQ)	Junji Yamaguchi	Chantal Mazza	Negative	Comments Submitted
5	Imperial Irrigation District	Tino Zaragoza	Denise Sanchez	Affirmative	N/A
5	JEA	John Babik		None	N/A
5	Lincoln Electric System	Brittany Millard		Affirmative	N/A
5	Los Angeles Department of Water and Power	Robert Kerrigan		None	N/A
5	Lower Colorado River Authority	Teresa Krabe		Negative	Comments Submitted
5	National Grid USA	Robin Berry		Negative	Third-Party Comments
5	NB Power Corporation - New Brunswick Power Transmission Corporation	Fon Hiew		Affirmative	N/A
5	Nebraska Public Power District	Ronald Bender		Negative	Third-Party Comments
5	New York Power Authority	Zahid Qayyum		Negative	Third-Party Comments
5	NextEra Energy	Richard Vendetti		Negative	Comments Submitted
5	NiSource - Northern Indiana Public Service Co.	Kathryn Tackett		Negative	Comments Submitted
5	Northern California Power Agency	Jeremy Lawson	Chris Carnesi	None	N/A
5	NRG - NRG Energy, Inc.	Patricia Lynch		Abstain	N/A

© 2026 - NERC Ver 4.2.1.0 Machine Name: ATLVPEROWEB02

Segment	Organization	Voter	Designated Proxy	Ballot	NERC Memo
5	OGE Energy - Oklahoma Gas and Electric Co.	Patrick Wells		Affirmative	N/A
5	Oglethorpe Power Corporation	Donna Johnson		Negative	Third-Party Comments
5	Oklahoma Municipal Power Authority	Patrick Tuttle		None	N/A
5	Omaha Public Power District	Kayleigh Wilkerson		Negative	Third-Party Comments
5	OTP - Otter Tail Power Company	Stacy Wahlund		Negative	Third-Party Comments
5	Pacific Gas and Electric Company	Tyler Brun	Bob Cardle	Abstain	N/A
5	Platte River Power Authority	Jon Osell		Negative	Third-Party Comments
5	Portland General Electric Co.	Ryan Olson		None	N/A
5	PPL - Louisville Gas and Electric Co.	Julie Hostrander		None	N/A
5	PSEG Nuclear LLC	Tim Kucey		Negative	Third-Party Comments
5	Public Utility District No. 1 of Chelan County	Rebecca Wickel		Affirmative	N/A
5	Public Utility District No. 1 of Snohomish County	Becky Burden		Negative	Third-Party Comments
5	Sacramento Municipal Utility District	Ryder Couch	Tim Kelley	Negative	Comments Submitted
5	Salt River Project	Thomas Johnson		Negative	Comments Submitted
5	Santee Cooper	Carey Salisbury		Negative	Comments Submitted
5	Seminole Electric Cooperative, Inc.	Melanie Wong		Abstain	N/A
5	Sempra - San Diego Gas and Electric	Jennifer Wright		Negative	Third-Party Comments

© 2026 - NERC Ver 4.2.1.0 Machine Name: ATLVPEROWEB02

Segment	Organization	Voter	Designated Proxy	Ballot	NERC Memo
5	Southern Company - Southern Company Generation	Leslie Burke		Affirmative	N/A
5	Southern Indiana Gas and Electric Co.	Larry Rogers		Negative	Comments Submitted
5	Tennessee Valley Authority	Darren Boehm		Negative	Comments Submitted
5	Tri-State G and T Association, Inc.	Sergio Banuelos		Affirmative	N/A
5	U.S. Bureau of Reclamation	Wendy Kalidass		Affirmative	N/A
5	Xcel Energy, Inc.	Gerry Huitt		Negative	Third-Party Comments
6	AEP	Mathew Miller		Negative	Comments Submitted
6	Ameren - Ameren Services	Robert Quinlivan		Negative	Comments Submitted
6	APS - Arizona Public Service Co.	Marcus Bortman		Affirmative	N/A
6	Arkansas Electric Cooperative Corporation	Bruce Walkup		Abstain	N/A
6	Associated Electric Cooperative, Inc.	Brian Ackermann		Negative	Third-Party Comments
6	Austin Energy	Imane Mrini		Negative	Comments Submitted
6	Berkshire Hathaway - PacifiCorp	Lindsay Wickizer		Negative	Comments Submitted
6	Black Hills Corporation	Rachel Schuldt		Negative	Comments Submitted
6	Bonneville Power Administration	Tanner Brier		Negative	Comments Submitted
6	Cleco Corporation	Robert Hirchak	Clay Walker	None	N/A
6	Con Ed - Consolidated Edison Co. of New York	Jason Chandler		Negative	Third-Party Comments

© 2026 - NERC Ver 4.2.1.0 Machine Name: ATLVPEROWEB02

Segment	Organization	Voter	Designated Proxy	Ballot	NERC Memo
6	Constellation	Kimberly Turco		Abstain	N/A
6	Dominion - Dominion Resources, Inc.	Sean Bodkin		Affirmative	N/A
6	Duke Energy	John Sturgeon		Negative	Third-Party Comments
6	Edison International - Southern California Edison Company	Stephanie Kenny		Negative	Comments Submitted
6	Entergy	Julie Hall		Affirmative	N/A
6	Evergy	Tiffany Lake	Alan Kloster	Negative	Comments Submitted
6	FirstEnergy - FirstEnergy Corporation	Stacey Sheehan		Affirmative	N/A
6	Great River Energy	Brian Meloy		Negative	Third-Party Comments
6	Imperial Irrigation District	Diana Torres	Denise Sanchez	Affirmative	N/A
6	Lincoln Electric System	Eric Ruskamp		Affirmative	N/A
6	Los Angeles Department of Water and Power	Anton Vu		None	N/A
6	Muscatine Power and Water	Nicholas Burns		Negative	Third-Party Comments
6	New York Power Authority	Shelly Dineen		Negative	Third-Party Comments
6	NextEra Energy - Florida Power and Light Co.	Justin Welty		Negative	Comments Submitted
6	NiSource - Northern Indiana Public Service Co.	Dmitriy Bazylyuk		Negative	Comments Submitted
6	Northern California Power Agency	Dennis Sismaet	Chris Carnesi	None	N/A
6	OGE Energy - Oklahoma Gas and Electric Co.	Ashley F Stringer	Dane Rogers	Affirmative	N/A
6	Omaha Public Power District	Shonda Markus		Negative	Third-Party Comments

© 2026 - NERC Ver 4.2.1.0 Machine Name: ATLVPEROWEB02

Segment	Organization	Voter	Designated Proxy	Ballot	NERC Memo
6	Platte River Power Authority	Sabrina Martz		Negative	Third-Party Comments
6	Portland General Electric Co.	Stefanie Burke		Abstain	N/A
6	Powerex Corporation	Raj Hundal		None	N/A
6	PPL - Louisville Gas and Electric Co.	Linn Oelker		Negative	Comments Submitted
6	PSEG - PSEG Energy Resources and Trade LLC	Laura Wu		Negative	Third-Party Comments
6	Public Utility District No. 1 of Chelan County	Anne Kronshage		Affirmative	N/A
6	Sacramento Municipal Utility District	Charles Norton	Tim Kelley	Negative	Comments Submitted
6	Salt River Project	Timothy Singh		Negative	Comments Submitted
6	Santee Cooper	Marty Watson		Negative	Comments Submitted
6	Seminole Electric Cooperative, Inc.	Bret Galbraith		None	N/A
6	Snohomish County PUD No. 1	John Liang		Negative	Third-Party Comments
6	Southern Company - Southern Company Generation	Ron Carlsen		Affirmative	N/A
6	Southern Indiana Gas and Electric Co.	Kati Barr		Negative	Comments Submitted
6	Tennessee Valley Authority	Armando Rodriguez		Negative	Comments Submitted
6	Western Area Power Administration	Jennifer Neville		Negative	Comments Submitted
6	Xcel Energy, Inc.	Steve Szablya		None	N/A
10	Midwest Reliability Organization	Mark Flanary		Affirmative	N/A

© 2026 - NERC Ver 4.2.4.0 Machine Name: ATLVPEROWEB02

Segment	Organization	Voter	Designated Proxy	Ballot	NERC Memo
10	New York State Reliability Council	Wesley Yeomans		None	N/A
10	Northeast Power Coordinating Council	Gerry Dunbar		Abstain	N/A
10	ReliabilityFirst	Tyler Schwendiman		Affirmative	N/A
10	SERC Reliability Corporation	Dave Krueger		Abstain	N/A
10	Texas Reliability Entity, Inc.	Rachel Coyne		Negative	Comments Submitted
10	Western Electricity Coordinating Council	Steven Rueckert		Abstain	N/A

Previous 1 Next

Showing 1 to 288 of 288 entries

© 2026 - NERC Ver 4.2.1.0 Machine Name: ATLVPEROWEB02

NERC
NORTH AMERICAN ELECTRIC RELIABILITY CORPORATION

Unofficial Comment Form

Project 2023-06 CIP-014 Risk Assessment Refinement

Be aware that this is a public proceeding and comments are publicly available upon submission. DO NOT include any CEII or otherwise sensitive information in your comments.

Do not use this form for submitting comments. Use the Standards Balloting and Commenting System (SBS) to submit comments on **Project 2023-06 Risk Assessment Refinement** by **8 p.m. Eastern, Wednesday, July 3, 2024.**

Additional information is available on the project page. If you have questions, contact Senior Standards Developer, Ben Wu (via email), or at 470-542-6882.

Background Information

Due to an increase in reports of physical attacks on electric substations, the Federal Energy Regulatory Commission (FERC) issued the December 2022 Order in Docket No. RD23-2-000 directing NERC to evaluate the effectiveness of the Physical Security Reliability Standard CIP-014-3 in mitigating the risks to the Bulk-Power System (BPS) associated with physical attacks. In the report filed in response to a FERC directive, NERC staff identified continuing inconsistency in registered entity CIP-014-3 risk assessments to most appropriately identify critical infrastructure. FERC directed NERC to evaluate whether the physical security protection requirements in NERC's Reliability Standards are adequate to address the risks associated with physical attacks on BPS Facilities, including the adequacy of the required risk assessment in CIP-014-3 Requirement R1. In the report, NERC found that CIP-014-3 required revision to assure adequate and consistent approach in evaluating instability as well as the identification of infrastructure critical to the operation of the BPS.

Questions

1. Do you agree with the modification in “Applicability” by moving 4.1.1 to Attachent1?

   ☐ Yes
   ☐ No

   Comments:

2. Do you agree with the modifications made in CIP-014-4 with modified Requirement R1 to address the issues identified in the SAR?

   ☐ Yes
   ☐ No

   Comments:

3. Do you agree with the modifications made in CIP-014-4 with new Requirement R2 to address the issues identified in the SAR?

   ☐ Yes
   ☐ No

   Comments:

4. Do you agree with the modifications made in CIP-014-4 with new Requirement R3 to address the issues identified in the SAR?

   ☐ Yes
   ☐ No

   Comments:

5. Do you agree with the modifications made in CIP-014-4 with new Requirement R4 to address the issues identified in the SAR?

   ☐ Yes
   ☐ No

   Comments:

6. Do you agree with the modifications made in CIP-014-4 with adding Requirement R5 to address the issues identified in the SAR?

   ☐ Yes
   ☐ No

   Comments:

7. Do you agree with the Implementation Plan for CIP-014-4?

   ☐ Yes
   ☐ No

   Comments:

8. Do you agree that CIP-014-4 is cost effective to address the reliability issue of physical security? If no, why not?

   ☐ Yes
   ☐ No

   Comments:

9. Provide any additional comments for the standard drafting team to consider, if desired.

   Comments:

NERC
NORTH AMERICAN ELECTRIC RELIABILITY CORPORATION

Standards Announcement

Project 2023-06 CIP-014 Risk Assessment Refinement

Be aware that this is a public proceeding and comments are publicly available upon submission. DO NOT include any CEII or otherwise sensitive information in your comments.

Formal Comment Period Open through July 3, 2024
Ballot Pools Forming through June 18, 2024

Now Available

A 45-day formal comment period for **Project 2023-06 CIP-014 Risk Assessment Refinement** is open through **8 p.m. Eastern, Wednesday, July 3, 2024** for the following standard and implementation plan:

- CIP-014-4 – Physical Security
- Implementation Plan

Commenting

Use the Standards Balloting and Commenting System (SBS) to submit comments. An unofficial Word version of the comment form is posted on the project page.

Reminder Regarding Corporate RBB Memberships

Under the NERC Rules of Procedure, each entity and its affiliates is collectively permitted one voting membership per Registered Ballot Body Segment. Each entity that undergoes a change in corporate structure (such as a merger or acquisition) that results in the entity or affiliated entities having more than the one permitted representative in a particular Segment must withdraw the duplicate membership(s) prior to joining new ballot pools or voting on anything as part of an existing ballot pool. Contact ballotadmin@nerc.net to assist with the removal of any duplicate registrations.

Ballot Pools

Ballot pools are being formed through **8 p.m. Eastern, Tuesday, June 18, 2024.** Registered Ballot Body members can join the ballot pools here.

- *Contact NERC IT support directly at https://support.nerc.net/ (Monday – Friday, 8 a.m. - 5 p.m. Eastern) for problems regarding accessing the SBS due to a forgotten password, incorrect credential error messages, or system lock-out.*
- *Passwords expire every **6 months** and must be reset.*
- *The SBS **is not** supported for use on mobile devices.*
- *Please be mindful of ballot and comment period closing dates. We ask to **allow at least 48 hours** for NERC support staff to assist with inquiries. Therefore, it is recommended that users try logging into their SBS accounts **prior to the last day** of a comment/ballot period.*

Next Steps

Initial ballots for the standard and implementation plan, as well as the non-binding poll of the associated Violation Risk Factors and Violation Severity Levels will be conducted **June 24 – July 3, 2024**.

For information on the Standards Development Process, refer to the Standard Processes Manual.

For more information or assistance, contact Senior Standards Developer**,** Ben Wu (via email) or at 470-542-6882. Subscribe to this project's observer mailing list by selecting "NERC Email Distribution Lists" from the "Service" drop-down menu and specify “Project 2023-06 CIP-014 Risk Assessment Refinement observer list” in the Description Box.



North American Electric Reliability Corporation
3353 Peachtree Rd, NE
Suite 600, North Tower
Atlanta, GA 30326
404-446-2560 | www.nerc.com

Comment Report

Project Name:	2023-06 CIP-014 Risk Assessment Refinement | Draft 1
Comment Period Start Date:	5/20/2024
Comment Period End Date:	7/3/2024
Associated Ballots:	Project 2023-06 CIP-014 Risk Assessment Refinement CIP-014-4 | Non-Binding Poll IN 1 NB Project 2023-06 CIP-014 Risk Assessment Refinement CIP-014-4 IN 1 ST Project 2023-06 CIP-014 Risk Assessment Refinement Implementation Plan IN 1 OT

There were 75 sets of responses, including comments from approximately 176 different people from approximately 102 companies representing 10 of the Industry Segments as shown in the table on the following pages.

Questions

1. Do you agree with the modification in “Applicability” by moving 4.1.1 to Attachent1?

2. Do you agree with the modifications made in CIP-014-4 with modified Requirement R1 to address the issues identified in the SAR?

3. Do you agree with the modifications made in CIP-014-4 with new Requirement R2 to address the issues identified in the SAR?

4. Do you agree with the modifications made in CIP-014-4 with new Requirement R3 to address the issues identified in the SAR?

5. Do you agree with the modifications made in CIP-014-4 with new Requirement R4 to address the issues identified in the SAR?

6. Do you agree with the modifications made in CIP-014-4 with adding Requirement R5 to address the issues identified in the SAR?

7. Do you agree with the Implementation Plan for CIP-014-4?

8. Do you agree that CIP-014-4 is cost effective to address the reliability issue of physical security? If no, why not?

9. Provide any additional comments for the standard drafting team to consider, if desired.

Organization Name	Name	Segment(s)	Region	Group Name	Group Member Name	Group Member Organization	Group Member Segment(s)	Group Member Region
MRO	Anna Martinson	1,2,3,4,5,6	MRO	MRO Group	Shonda McCain	Omaha Public Power District (OPPD)	1,3,5,6	MRO
					Michael Brytowski	Great River Energy	1,3,5,6	MRO
					Jamison Cawley	Nebraska Public Power District	1,3,5	MRO
					Jay Sethi	Manitoba Hydro (MH)	1,3,5,6	MRO
					Husam Al-Hadidi	Manitoba Hydro (System Preformance)	1,3,5,6	MRO
					Kimberly Bentley	Western Area Power Adminstration	1,6	MRO
					Jaimin Patal	Saskatchewan Power Coporation (SPC)	1	MRO
					George Brown	Pattern Operators LP	5	MRO
					Larry Heckert	Alliant Energy (ALTE)	4	MRO
					Terry Harbour	MidAmerican Energy Company (MEC)	1,3	MRO
					Dane Rogers	Oklahoma Gas and Electric (OG&E)	1,3,5,6	MRO
					Seth Shoemaker	Muscatine Power & Water	1,3,5,6	MRO
					Michael Ayotte	ITC Holdings	1	MRO
					Andrew Coffelt	Board of Public Utilities-Kansas (BPU)	1,3,5,6	MRO
					Peter Brown	Invenergy	5,6	MRO

					Angela Wheat	Southwestern Power Administration	1	MRO
					Bobbi Welch	Midcontinent ISO, Inc.	2	MRO
Public Utility District No. 1 of Chelan County	Anne Kronshage	6		Public Utility District No. 1 of Chelan County - Voting Group	Anne Kronshage	Public Utility District No. 1 of Chelan County	6	WECC
					Diane Landry	Public Utility District No. 1 of Chelan County	1	WECC
					Rebecca Zahler	Public Utility District No. 1 of Chelan County	5	WECC
					Joyce Gundry	Public Utility District No. 1 of Chelan County	3	WECC
Tennessee Valley Authority	Brian Millard	1,3,5,6	SERC	TVA RBB	Ian Grant	Tennessee Valley Authority	3	SERC
					David Plumb	Tennessee Valley Authority	1	SERC
					Armando Rodriguez	Tennessee Valley Authority	6	SERC
					Nehtisha Rollis	Tennessee Valley Authority	5	SERC
Santee Cooper	Chris Wagner	1		Santee Cooper	John Abrams	Santee Cooper	1,3,5,6	SERC
					Weijian Cong	Santee Cooper	1,3,5,6	SERC
					Rene' Free	Santee Cooper	1,3,5,6	SERC
					Stephen Lowe	Santee Cooper	1,3,5,6	SERC
					Christie Pope	Santee Cooper	1,3,5,6	SERC
Exelon		1		Exelon	Daniel Gacek	Exelon	1	RF

	Daniel Gacek				Kinte Whitehead	Exelon	3	RF
Manitoba Hydro	Jay Sethi	1,3,5,6	MRO	Manitoba Hydro Group	Nazra Gladu	Manitoba Hydro	1	MRO
					Mike Smith	Manitoba Hydro	3	MRO
					Kristy-Lee Young	Manitoba Hydro	5	MRO
					Kelly Bertholet	Manitoba Hydro	6	MRO
Jennie Wike	Jennie Wike		WECC	Tacoma Power	Jennie Wike	Tacoma Public Utilities	1,3,4,5,6	WECC
					John Merrell	Tacoma Public Utilities (Tacoma, WA)	1	WECC
					John Nierenberg	Tacoma Public Utilities (Tacoma, WA)	3	WECC
					Hien Ho	Tacoma Public Utilities (Tacoma, WA)	4	WECC
					Terry Gifford	Tacoma Public Utilities (Tacoma, WA)	6	WECC
					Ozan Ferrin	Tacoma Public Utilities (Tacoma, WA)	5	WECC
ACES Power Marketing	Jodirah Green	1,3,4,5,6	MRO,RF,SERC,Texas RE,WECC	ACES Collaborators	Bob Soloman	Hoosier Energy Electric Cooperative	1	RF
					Jennifer Bray	Arizona Electric Power Cooperative, Inc.	1	WECC
Eversource Energy	Joshua London	1		Eversource	Joshua London	Eversource Energy	1	NPCC
					Vicki O'Leary	Eversource Energy	3	NPCC
FirstEnergy - FirstEnergy Corporation	Mark Garza	4		FE Voter	Julie Severino	FirstEnergy - FirstEnergy Corporation	1	RF
					Aaron Ghodooshim	FirstEnergy - FirstEnergy Corporation	3	RF

					Robert Loy	FirstEnergy - FirstEnergy Solutions	5	RF
					Mark Garza	FirstEnergy- FirstEnergy	1,3,4,5,6	RF
					Stacey Sheehan	FirstEnergy - FirstEnergy Corporation	6	RF
Austin Energy	Michael Dillard	5		Austin Energy	Michael Dillard	Austin Energy	5	Texas RE
					Lovita Griffin	Austin Energy	3	Texas RE
					Tony Hua	Austin Energy	4	Texas RE
					Imane Mrini	Austin Energy	6	Texas RE
					Thomas Standifur	Austin Energy	1	Texas RE
Black Hills Corporation	Rachel Schuldt	6		Black Hills Corporation - All Segments	Micah Runner	Black Hills Corporation	1	WECC
					Josh Combs	Black Hills Corporation	3	WECC
					Rachel Schuldt	Black Hills Corporation	6	WECC
					Carly Miller	Black Hills Corporation	5	WECC
					Sheila Suurmeier	Black Hills Corporation	5	WECC
Northeast Power Coordinating Council	Ruida Shu	1,2,3,4,5,6,7,8,9,10	NPCC	NPCC RSC	Gerry Dunbar	Northeast Power Coordinating Council	10	NPCC
					Deidre Altobell	Con Edison	1	NPCC
					Michele Tondalo	United Illuminating Co.	1	NPCC
					Stephanie Ullah-Mazzuca	Orange and Rockland	1	NPCC
					Michael Ridolfino	Central Hudson Gas & Electric Corp.	1	NPCC
					Randy Buswell	Vermont Electric Power Company	1	NPCC
					James Grant	NYISO	2	NPCC
					Dermot Smyth	Con Ed - Consolidated	1	NPCC

	Edison Co. of New York		
David Burke	Orange and Rockland	3	NPCC
Peter Yost	Con Ed - Consolidated Edison Co. of New York	3	NPCC
Salvatore Spagnolo	New York Power Authority	1	NPCC
Sean Bodkin	Dominion - Dominion Resources, Inc.	6	NPCC
David Kwan	Ontario Power Generation	4	NPCC
Silvia Mitchell	NextEra Energy - Florida Power and Light Co.	1	NPCC
Sean Cavote	PSEG	4	NPCC
Jason Chandler	Con Edison	5	NPCC
Tracy MacNicoll	Utility Services	5	NPCC
Shivaz Chopra	New York Power Authority	6	NPCC
Vijay Puran	New York State Department of Public Service	6	NPCC
David Kiguel	Independent	7	NPCC
Joel Charlebois	AESI	7	NPCC
Joshua London	Eversource Energy	1	NPCC
Nicolas Turcotte	Hydro-Quebec (HQ)	1	NPCC
Jeffrey Streifling	NB Power Corporation	1,4,10	NPCC
Joel Charlebois	AESI	7	NPCC
John Hastings	National Grid	1	NPCC
Erin Wilson	NB Power	1	NPCC

					James Grant	NYISO	2	NPCC
					Michael Couchesne	ISO-NE	2	NPCC
					Kurtis Chong	IESO	2	NPCC
					Michele Pagano	Con Edison	4	NPCC
					Bendong Sun	Bruce Power	4	NPCC
					Carvers Powers	Utility Services	5	NPCC
					Wes Yeomans	NYSRC	7	NPCC
Dominion - Dominion Resources, Inc.	Sean Bodkin	6		Dominion	Connie Lowe	Dominion - Dominion Resources, Inc.	3	NA - Not Applicable
					Lou Oberski	Dominion - Dominion Resources, Inc.	5	NA - Not Applicable
					Larry Nash	Dominion - Dominion Virginia Power	1	NA - Not Applicable
					Rachel Snead	Dominion - Dominion Resources, Inc.	5	NA - Not Applicable
Western Electricity Coordinating Council	Steven Rueckert	10		WECC Entity Monitoring	Steve Rueckert	WECC	10	WECC
					Curtis Crews	WECC	10	WECC
Tim Kelley	Tim Kelley		WECC	SMUD and BANC	Nicole Looney	Sacramento Municipal Utility District	3	WECC
					Charles Norton	Sacramento Municipal Utility District	6	WECC
					Wei Shao	Sacramento Municipal Utility District	1	WECC
					Foung Mua	Sacramento Municipal Utility District	4	WECC
					Nicole Goi	Sacramento Municipal Utility District	5	WECC
					Kevin Smith	Balancing Authority of	1	WECC

						Northern California		

1. Do you agree with the modification in “Applicability” by moving 4.1.1 to Attachent1?	
Jessica Cordero - Unisource - Tucson Electric Power Co. - 1	
Answer	No
Document Name	
Comment	
Moving “Applicability” is acceptable. But new addition of Applicability 2.1 needs further clarification on physical adjacency in the Applicability. Would like clarification on applicability, does any station below 200kV need to be included in proximity check? Ties in with R2.	
Likes 0	
Dislikes 0	
Response	
Richard Jackson - U.S. Bureau of Reclamation - 1	
Answer	No
Document Name	
Comment	
Reclamation recommends leaving “Applicability” in 4.1.1 and not creating an “Attachment 1” as it does not follow the flow of most Standards currently in use and may cause confusion.	
Likes 0	
Dislikes 0	
Response	
Matt Carden - Southern Company - Southern Company Services, Inc. - 1	
Answer	No
Document Name	
Comment	
Southern Company disagrees with the inclusion of Attachment 1 (2.1) in the proposed standard. Requirement R2 addresses the need to provide clear expectations regarding the inclusion of physically adjacent elements in the risk assessment. However, the SAR did not identify a need to modify applicability.	
Likes 0	

Dislikes 0	

Response

Kevin Conway - Western Power Pool - 4	
Answer	No
Document Name	

Comment
Changing the Functional Entity description and moving it to Attachment 1, then requiring each TO to maintain a list of facilities identified in Attachment 1 complicates compliance for smaller TOs. Specifically, smaller TOs which do not operate facilities listed in Attachment 1 must maintain null lists and represents a compliance risk due to the administration of these lists. During compliance audits, auditors will use subjective judgement as to how the lists should look, how frequently they should be updated/reviewed/maintained, and who is ultimately responsible in the organization to ensure that they are correct. Entities will be expected to have multiple compliance controls in place to ensure the null lists are created, reviewed, approved and properly managed. During compliance audits R1, in relation to the movement of the Functional Entity description, will result in zero defect compliance. Entities will have risks related to the fact that they didn't feel a null list is appropriate and necessary to verify they have no assets that qualify under this standard. The movement of the Functional Entity description further complicates compliance whereby the entity now must dig through the standard to determine its applicability, rather than simply looking at the Applicability Section of the standard.

Likes 0	
Dislikes 0	

Response

Jennie Wike - Jennie Wike On Behalf of: John Merrell, Tacoma Public Utilities (Tacoma, WA), 1, 4, 5, 6, 3; - Jennie Wike, Group Name Tacoma Power	
Answer	No
Document Name	

Comment
Tacoma Power supports the MRO NSRF comments, as follows. The MRO NSRF agrees with moving the Applicability criteria into an Attachment 1. However, the MRO NSRF recommends removing Criterion 2.1 from Attachment 1. The Project 2023-06 SAR asked to revise the risk assessment to account for adjacent substations, but did not ask for changes to the applicable Facilities. Further, the NERC Report titled, "Evaluation of the Physical Security Reliability Standard and Physical Security Attacks to the Bulk-Power System," concluded that "…based on available data, the Applicability criteria in Reliability Standard CIP-014-3 appears to adequately identify the subset of all transmission stations and substations that TOs should evaluate as part of the Requirement R1 risk assessments." In addition, Criterion 2.1 creates a scenario whereby one entity could identify that it has an applicable substation when considered in aggregate with a different entity's substation down the street. That other entity may have different proximity criteria and therefore not consider its substation applicable, when the intent, as drafted, appears to be that both substations would be considered applicable.

Likes 0	
Dislikes 0	

Response

Anna Martinson - MRO - 1,2,3,4,5,6 - MRO, Group Name MRO Group

Answer	No
Document Name	

Comment

The MRO NSRF agrees with moving the Applicability criteria into an Attachment 1.

However, the MRO NSRF recommends removing Criterion 2.1 from Attachment 1. The Project 2023-06 SAR asked to revise the risk assessment to account for adjacent substations, but did not ask for changes to the applicable Facilities. Further, the NERC Report titled, "Evaluation of the Physical Security Reliability Standard and Physical Security Attacks to the Bulk-Power System," concluded that "…based on available data, the Applicability criteria in Reliability Standard CIP-014-3 appears to adequately identify the subset of all transmission stations and substations that TOs should evaluate as part of the Requirement R1 risk assessments."

In addition, Criterion 2.1 creates a scenario whereby one entity could identify that it has an applicable substation when considered in aggregate with a different entity's substation down the street. That other entity may have different proximity criteria and therefore not consider its substation applicable, when the intent, as drafted, appears to be that both substations would be considered applicable.

Likes 1	Lincoln Electric System, 1, Johnson Josh
Dislikes 0	

Response

Brian Millard - Tennessee Valley Authority - 1,3,5,6 - SERC, Group Name TVA RBB

Answer	No
Document Name	

Comment

TVA disagrees with the modifications to the "Applicability" section based on the changes made to criterion 2.1 in Attachment 1. TVA has two fundamental disagreements with this criterion:

1. Nonapplicable facilities should remain nonapplicable and not be subject evaluation in aggregate based on physical location or the other criteria outlined in R2. No evidence or basis in fact is provided to justify an event type that would trigger the consideration of two (2) individual facilities as a single facility.
2. TVA also disagrees with the changes to R2, on which aggregate facility evaluation is based, with the belief that additional clarification is required on the definition and application of "proximity".

The requirement to evaluate facilities for applicability in aggregate should be removed from the standard or additional clarifications to R2 should be provided as outlined by TVA.

Likes 0	
Dislikes 0	

Response

Alan Kloster - Alan Kloster On Behalf of: Jeremy Harris, Evergy, 3, 5, 1, 6; Kevin Frick, Evergy, 3, 5, 1, 6; Marcus Moor, Evergy, 3, 5, 1, 6; Tiffany Lake, Evergy, 3, 5, 1, 6; - Alan Kloster

Answer	No
Document Name	

Comment

Evergy supports and incorporates by reference the comments of the Edison Electric Insitute (EEI) and MRO NSRF for question #1.

Likes 0	
Dislikes 0	

Response

Leshel Hutchings - AEP - 3

Answer	No
Document Name	

Comment

We are not opposed to the Applicability section moving to 4.1.1 to Attachment 1, however additional changes were made to the Applicability section which should be stricken.

Bullet 2.1 "*Transmission station(s) or Transmission substation(s), that individually are not applicable, but are applicable when combined based on physical adjacency per Requirement R2, based on aggregated weighting value criteria from Table 1 are to be considered as applicable*" should be entirely removed. The content of the Applicability section should be unchanged with this SAR, which has a focused scope on the R1 risk assessment.

Bullet 2.1 would add excessive compliance burden, for both large and small TOs, while explicitly targeting an incredibly small risk. Previously, applicability scoring could be done first. Then small TOs with no applicable stations did not have to proceed with burdensome, manual, or time-consuming evaluations of proximity at all. Large TOs could proceed with detailed evaluations of proximity on the smaller applicable list. 2.1 would require a proximity screening to be performed on every 200 kV+ station on an entity's footprint to even determine the applicable list. This also opens the door for an auditor who takes issue with an entity's technical rationale for proximity to take issue with the entire applicability list.

Additionally, Applicability Section 4.1.1.1 through 4.1.1.4 mirror those Transmission Facilities that meet the bright line criteria for "Medium Impact" Transmission Facilities under Attachment 1 of Reliability Standard CIP-002- 5.1. Modifying the Applicability section would cause unnecessary inconsistency between these aligned standards.

Likes 0	
Dislikes 0	

Response	
Cain Braveheart - Bonneville Power Administration - 1,3,5,6 - WECC	
Answer	No
Document Name	
Comment	
BPA believes it is less of a compliance documentation burden for Registered Entities to determine exemption at the Section 4 level versus complying with R1, and having to document that compliance, in order to determine the rest of the requirements do not apply. BPA understands the original intent of CIP-014 was to identify a very small number of the absolutely most critical substations. BPA asserts that requiring Registered Entities to go through the R1 exercise in order to determine they are exempt is contrary to the original intent of the standard.	
Likes 0	
Dislikes 0	
Response	
Karen Demos - NextEra Energy - Florida Power and Light Co. - 3	
Answer	No
Document Name	
Comment	
NextEra/FPL supports EEI's comments	
Likes 0	
Dislikes 0	
Response	
Ben Hammer - Western Area Power Administration - 1	
Answer	No
Document Name	
Comment	
WAPA agrees with moving the Applicability criteria into an Attachment 1. WAPA concurs with the comments provided by the MRO NSRF and the elimination of Criteria 2.1.	
Likes 0	

Dislikes 0	
Response	
Michael Dillard - Austin Energy - 5, Group Name Austin Energy	
Answer	No
Document Name	MRO-Tacoma CIP-014 comments.docx
Comment	
Austin Energy supports MRO's comments.	
Likes 0	
Dislikes 0	
Response	
Richard Vendetti - NextEra Energy - 5	
Answer	No
Document Name	
Comment	
NEE support's EEI comments: " EEI supports moving 4.1.1 to Attachment 1, however, we disagree with the inclusion of, and suggest striking, criterion 2.1 in the Applicability section because it is outside of the scope of the SAR. The SAR asks the drafting team to provide clear expectations regarding the inclusion of physically adjacent elements for the purpose of evaluating the impact from a physical attack, but it does not require or request modifications to the applicability of the Standard or requirements. Multiple non-applicable stations within reasonable proximity should not be deemed applicable when considered as a whole. It is the presence of an applicable station that requires evaluation of a physical attack and the identification of additional stations that may be impacted. Further, criterion 2.1 includes a circular reference to Requirement R2 for Transmission station(s) or Transmission substation(s) that individually are not applicable when CIP-014-4 Requirement R1, Part 1.3 states that if the TO identified no applicable Transmission station(s) or Transmission substation(s) they are not required to fulfill the remainder of the standard, including Requirement R2. "	
Likes 0	
Dislikes 0	
Response	
Donna Wood - Tri-State G and T Association, Inc. - 1	
Answer	No
Document Name	

Comment	
Tri-State agrees with the MRO NSRF Submitted Comments	
Likes 0	
Dislikes 0	
Response	
Tim Kelley - Tim Kelley On Behalf of: Charles Norton, Sacramento Municipal Utility District, 3, 6, 4, 1, 5; Foung Mua, Sacramento Municipal Utility District, 3, 6, 4, 1, 5; Kevin Smith, Balancing Authority of Northern California, 1; Nicole Looney, Sacramento Municipal Utility District, 3, 6, 4, 1, 5; Ryder Couch, Sacramento Municipal Utility District, 3, 6, 4, 1, 5; Wei Shao, Sacramento Municipal Utility District, 3, 6, 4, 1, 5; - Tim Kelley, Group Name SMUD and BANC	
Answer	No
Document Name	
Comment	
SMUD agrees with the comments submitted by the MRO NSRF.	
Likes 0	
Dislikes 0	
Response	
Rachel Schuldt - Black Hills Corporation - 6, Group Name Black Hills Corporation - All Segments	
Answer	No
Document Name	
Comment	
Black Hills Corporation agrees with moving 4.1.1 to Attachment 1. However, Black Hills Corporation aligns with EEI comments and disagrees with the inclusion of criterion 2.1 in the Applicability section as it creates a circular reference that brings in station(s)/substation(s) that are individually not applicable via Attachment 1, which is outside the scope of the SAR. Black Hills Corporation recommends striking criterion 2.1 from the Applicability section.	
Likes 0	
Dislikes 0	
Response	
Ellese Murphy - Duke Energy - 1,3,5,6 - Texas RE,SERC,RF	
Answer	No

Document Name	
Comment	
Duke Energy supports EEI comments that disagree with the inclusion of criterion 2.1 in Attachment 1 and suggests striking it.	
Likes 0	
Dislikes 0	
Response	
Sean Bodkin - Dominion - Dominion Resources, Inc. - 6, Group Name Dominion	
Answer	No
Document Name	
Comment	
Dominion Energy supports EEI comments.	
Likes 0	
Dislikes 0	
Response	
Andrew Smith - APS - Arizona Public Service Co. - 5	
Answer	No
Document Name	
Comment	
AZPS supports moving 4.1.1 to Attachment 1, however agrees with EEI's comments which ask the SDT to provide clear expectations regarding the inclusion of physically adjacent elements for the purpose of evaluating the impact from a physical attack.	
Likes 0	
Dislikes 0	
Response	
Devin Shines - PPL - Louisville Gas and Electric Co. - 1,3,5,6 - SERC,RF	
Answer	No
Document Name	
Comment	

Louisville Gas & Electric and Kentucky Utilities support EEI's comments.

Likes 0	
Dislikes 0	

Response

Israel Perez - Israel Perez On Behalf of: Laura Somak, Salt River Project, 3, 6, 5, 1; Mathew Weber, Salt River Project, 3, 6, 5, 1; Thomas Johnson, Salt River Project, 3, 6, 5, 1; Timothy Singh, Salt River Project, 3, 6, 5, 1; - Israel Perez

Answer	No
Document Name	

Comment

SRP supports the MRO NSRF with Tacoma Power's comments.

Likes 0	
Dislikes 0	

Response

Dave Krueger - SERC Reliability Corporation - 10

Answer	No
Document Name	

Comment

Thank you for the chance to comment, SERC appreciates the complexity of the SDT's task of modifying multiple parts of such a high-profile and high-priority standard.

· Item #Applicability.A: We agree that moving the Applicability to Attachment 1 is effective and accommodates the changes in the new R1 and R2. However, we encourage the SDT to add an additional Transmission Substation applicability criterion similar to the existing CIP-002-5.1a Attachment 1 Criterion 2.8. Specifically, to add CIP-014-3 substation applicability for any Transmission substation/station which connects an aggregate of 1500MW or more generation to the BES. This stems from a field observation that it is not abnormal for substations below the 499-200kV thresholds (which don't meet the line count to be included under CIP-014-4 Attachment 1, Criterion 2) to demonstrate stability impacts. Perhaps a field trial could identify the validity of their inclusion and if such a reliability gap exists.

Likes 0	
Dislikes 0	

Response

Hillary Creurer - Allete - Minnesota Power, Inc. - 1

Answer	No
Document Name	
Comment	
Minnesota Power supports MRO-NSRF and EEI's comments.	
Likes 0	
Dislikes 0	
Response	
David Jendras Sr - Ameren - Ameren Services - 3	
Answer	No
Document Name	
Comment	
Ameren supports EEI's comments on this project.	
Likes 0	
Dislikes 0	
Response	
Kristine Martz - Edison Electric Institute - NA - Not Applicable - NA - Not Applicable	
Answer	No
Document Name	
Comment	
EEI supports moving 4.1.1 to Attachment 1, however, we disagree with the inclusion of, and suggest striking, criterion 2.1 in the Applicability section because it is outside of the scope of the SAR. The SAR asks the drafting team to provide clear expectations regarding the inclusion of physically adjacent elements for the purpose of evaluating the impact from a physical attack, but it does not require or request modifications to the applicability of the Standard or requirements. Multiple non-applicable stations within reasonable proximity should not be deemed applicable when considered as a whole. It is the presence of an applicable station that requires evaluation of a physical attack and the identification of additional stations that may be impacted. Further, criterion 2.1 includes a circular reference to Requirement R2 for Transmission station(s) or Transmission substation(s) that individually are not applicable when CIP-014-4 Requirement R1, Part 1.3 states that if the TO identified no applicable Transmission station(s) or Transmission substation(s) they are not required to fulfill the remainder of the standard, including Requirement R2.	
Likes 0	
Dislikes 0	

Response

Stephen Stafford - Stephen Stafford On Behalf of: Greg Davis, Georgia Transmission Corporation, 1; - Stephen Stafford	
Answer	No
Document Name	
Comment	

Modifying the Applicability section to move 4.1.1 to Attachment 1 is not a substantive change and is not particularly problematic.

Criteria 2.1 in the proposed attachment is not clearly worded and doesn't appear necessary as R2 is fairly clear on the applicability of proximity facilities. If this criteria is retained in the attachment, it should be simplified to simply refer to R2 and remove the additional unnecessary language.

(Regarding Criteria 3) Additionally, with the retirement of FAC-010, planning entities do not establish SOLs under the NERC standards. This criteria correctly refers to IROLs established by the RC but the language around the planning entities needs to be updated to correspond with the language established by NERC Project 2015-09 regarding the PC/TP identifying instances of "instability, Cascading or uncontrolled separation that adversely impacts the reliability of the BES."

Likes 0	
Dislikes 0	

Response

Denise Sanchez - Denise Sanchez On Behalf of: Diana Torres, Imperial Irrigation District, 1, 6, 5, 3; George Kirschner, Imperial Irrigation District, 1, 6, 5, 3; Jesus Sammy Alcaraz, Imperial Irrigation District, 1, 6, 5, 3; Tino Zaragoza, Imperial Irrigation District, 1, 6, 5, 3; - Denise Sanchez	
Answer	No
Document Name	
Comment	

IID agrees with transferring the applicability criteria from Section 4.1.1 to Attachment 1.

IID does not agree with the addition of the language in Criterion 2.1. This addition will complicate compliance for "adjacent" facilities owned by different entities.

A small entity may not have any stations subject to CIP-014, but it may be adjacent to a large transmission facility of another entity that falls under CIP-014. These stations would be verified through duplicative R2 criteria, resulting in the performance of a risk assessment under R5. The small entity conducting the risk assessment may end up with a list of stations that it neither owns nor operates.

What implications does this have for compliance with CIP-014? How should the small entity proceed to adhere to R6-R10? Will the small entity be tasked with assessing threats and vulnerabilities of the large transmission facilities that they neither own or operate? Furthermore, would they be responsible implementing security measures for these stations as well?

Likes 0	
Dislikes 0	

Response

Jesus Sammy Alcaraz - Imperial Irrigation District - 1	
Answer	No
Document Name	

Comment
IID agrees with transferring the applicability criteria from Section 4.1.1 to Attachment 1. IID does not agree with the addition of the language in Criterion 2.1. This addition will complicate compliance for “adjacent” facilities owned by different entities. A small entity may not have any stations subject to CIP-014, but it may be adjacent to a large transmission facility of another entity that falls under CIP-014. These stations would be verified through duplicative R2 criteria, resulting in the performance of a risk assessment under R5. The small entity conducting the risk assessment may end up with a list of stations that it neither owns nor operates. What implications does this have for compliance with CIP-014? How should the small entity proceed to adhere to R6-R10? Will the small entity be tasked with assessing threats and vulnerabilities of the large transmission facilities that they neither own or operate? Furthermore, would they be responsible implementing security measures for these stations as well?

Likes 0	
Dislikes 0	

Response

Selene Willis - Edison International - Southern California Edison Company - 5	
Answer	No
Document Name	

Comment
See comments submitted by the Edison Eclectic Institute

Likes 0	
Dislikes 0	

Response

Dwanique Spiller - Berkshire Hathaway - NV Energy - 5	
Answer	No
Document Name	

Comment

NV Energy supports the EEI response to this question.

Likes 0	
Dislikes 0	

Response

Carver Powers - Utility Services, Inc. - 4

Answer	No
Document Name	

Comment

The proposed changes of moving the applicability of the standard to R1 and Attachment 1 now brings low impact entities into scope. Is this the intent of the Standard Drafting Team? Is the intent of this modification to require low impact entities to consider the criteria in Attachment 1? This process is already being completed by entities during their CIP-002 BES Cyber System categorization.

Likes 0	
Dislikes 0	

Response

Stephanie Kenny - Edison International - Southern California Edison Company - 6

Answer	No
Document Name	

Comment

See EEI comments

Likes 0	
Dislikes 0	

Response

Gail Elliott - Gail Elliott On Behalf of: Michael Moltane, International Transmission Company Holdings Corporation, 1; - Gail Elliott

Answer	No
Document Name	

Comment

ITC supports the EEI response	
Likes 0	
Dislikes 0	
Response	
Amy Wesselkamper - PNM Resources - Public Service Company of New Mexico - 3	
Answer	No
Document Name	
Comment	

PNM and TNMP support EEI comments regarding 4.1.1, noted again here.

"EEI supports moving 4.1.1 to Attachment 1, however, we disagree with the inclusion of, and suggest striking, criterion 2.1 in the Applicability section because it is outside of the scope of the SAR. The SAR asks the drafting team to provide clear expectations regarding the inclusion of physically adjacent elements for the purpose of evaluating the impact from a physical attack, but it does not require or request modifications to the applicability of the Standard or requirements. Multiple non-applicable stations within reasonable proximity should not be deemed applicable when considered as a whole. It is the presence of an applicable station that requires evaluation of a physical attack and the identification of additional stations that may be impacted.

Further, criterion 2.1 includes a circular reference to Requirement R2 for Transmission station(s) or Transmission substation(s) that individually are not applicable when CIP-014-4 Requirement R1, Part 1.3 states that if the TO identified no applicable Transmission station(s) or Transmission substation(s) they are not required to fulfill the remainder of the standard, including Requirement R2. "

Likes 0	
Dislikes 0	
Response	
Jason Snodgrass - Jason Snodgrass On Behalf of: Katrina Lyons, Georgia System Operations Corporation, 3, 4; - Jason Snodgrass	
Answer	No
Document Name	
Comment	

GSOC supports comments provided by Georgia Transmission

Likes 0	
Dislikes 0	
Response	

Mark Garza - FirstEnergy - FirstEnergy Corporation - 4, Group Name FE Voter	
Answer	Yes
Document Name	
Comment	
FirstEnergy has no objection.	
Likes 0	
Dislikes 0	
Response	
Jennifer Bray - Arizona Electric Power Cooperative, Inc. - 1	
Answer	Yes
Document Name	
Comment	
AEPC signed on to ACES comments below: ACES agrees with moving the Applicability to Attachment 1. While ACES agrees with the question asked, Criterion 2.1 from Attachment 1 is beyond the scope of the SAR. Further, Criterion 2.1 could create a situation where one entity identifies an Applicable substation when considered with another adjacent entity's substation. The other entity may have a different proximity criteria and not considered an Applicable substation when both should be applicable.	
Likes 0	
Dislikes 0	
Response	
Joshua London - Eversource Energy - 1, Group Name Eversource	
Answer	Yes
Document Name	
Comment	
Eversource agrees with the creation of Attachment 1 but offers some minor comments: **2.1:** For sake of consistency, the phrase "physical adjacency" should be removed from section 2.1 and replaced with "proximity" to better align with R2. - The "500 kV and above" section should either be removed from the table in its entirety due to confusion being listed as zero, or replace the zero with a phrase like "must be studied." Phrases ("not applicable") are already being used within the table so it would be a similar approach.	

Likes 0	
Dislikes 0	
Response	
Andy Fuhrman - Andy Fuhrman On Behalf of: Theresa Allard, Minnkota Power Cooperative Inc., 1; - Andy Fuhrman	
Answer	Yes
Document Name	
Comment	
MPC concurs with ACES' comments regarding Criterion 2.1 of Attachment 1.	
Likes 0	
Dislikes 0	
Response	
Daniel Gacek - Exelon - 1, Group Name Exelon	
Answer	Yes
Document Name	
Comment	
Exelon supports moving the Applicability criteria into Attachment 1. Exelon interprets the SAR to require the assessment of a physical attacks on physically adjacent elements, and therefore supports the intent of Attachment 1, Section 2.1 and the R2.1 criteria to identify substations that are to be combined and treated as a single substation site for the purpose of the risk assessment The Attachment 1, Section 2.1, reference to the R2 methodology is confusing. Consider removing the reference to R2 and including physical adjacency criteria within Section 2.1; or alternatively, consider combining R1 and R2 and moving the Section 2.1 process step into R2.	
Likes 0	
Dislikes 0	
Response	
Chris Shultz - Seattle City Light - 5	
Answer	Yes
Document Name	

Comment	
Moving the substation applicability criteria into the attachment (and referencing it from R1) makes sense.	
Likes 0	
Dislikes 0	
Response	
Robert Jones - Seattle City Light - 4	
Answer	Yes
Document Name	
Comment	
Moving the substation applicability criteria into the attachment (and referencing it from R1) makes sense.	
Likes 0	
Dislikes 0	
Response	
Zenon O'young-Chu - Seattle City Light - 3	
Answer	Yes
Document Name	
Comment	
Moving the substation applicability criteria into the attachment (and referencing it from R1) makes sense.	
Likes 0	
Dislikes 0	
Response	
Steven Rueckert - Western Electricity Coordinating Council - 10, Group Name WECC Entity Monitoring	
Answer	Yes
Document Name	
Comment	

WECC voted affirmative for the proposed standard but offers the following for serious consideration by the drafting team.

Placement within Attachment 1 versus in 4.1.1 is appropriate. However, the inconsistent use of “Transmission station”, “Transmission substation”, “Transmission Facilities”, “station”, “substation” does not support clarity. The first sentence of Attachment 1 is “Applicable Transmission station(s) or Transmission substation(s) that meet any of the following criteria:”. The second criterion starts with “Transmission Facilities that are operating between 200 kV and 499 kV at a single station or substation…” Why not consider changing Transmission Facility usages to Transmission station and Transmission substation? Example- “1. Transmission station(s) and Transmission substation(s) operated between 200 kV and 499 kV, where the Transmission station or Transmission substation is connected….” Criterion 2.1 illustrates that approach.

Attachment 1 needs to address consideration of the Transmission station(s) and Transmission substation(s) without regards to joint/multiple/shared ownership. Requirement 4 will determine which entity does the risk assessment but Transmission Owners should maintain the list inclusive of these arrangements. Responsibility could change in terms of performing the assessment.

Criterion 2.1 uses “adjacency” versus “proximity”. Consider changing that to read “Transmission station(s) or Transmission substation(s) that individually are not applicable based on the aggregated weighting value criteria from Table 1 but are applicable when included in the risk assessment based on proximity criterion per Requirement R2.” Suggest labeling Table 1. Suggest clarifying Table 1 to ensure that a Transmission station(s) or Transmission substation(s) in close proximity are applicable to use in the assessment regardless of voltage level or alternatively if operated between 200 kV and 499 kV. Example- Is there clarity in this scenario: A 345 kV line (one of three from the CIP-014-4 applicable substation X) connects to substation Y which is in the “line-of-site” and steps down to 138 kV with multiple Transmission Lines connecting other Transmission substation(s). Substation Y is included not considering the weighting criteria as applied at substation Y or does substation Y have to consider the weighting criteria to be included in the assessment?

And just to be clear, any Transmission station or substation that has a single 500 kV or above Transmission Line is included, correct?

Criterion 3 should be reviewed and updated to reflect Project 2015-09 language regarding IROLs applicability to the Planning Coordinator and Transmission Planner. Also- it is unclear who the “its” is referencing to a certain degree. Consider this option: “3. Transmission station(s) or Transmission substation(s) that are identified by a Transmission Owner’s Reliability Coordinator as critical to the identification of Interconnection Reliability Operating Limits (IROLs) and their associated contingencies. Transmission station(s) or Transmission substation(s) that are identified by a Transmission Owner’s Planning Coordinator(s) and Transmission Planner(s) as associated with identified instability.” See FAC-014-3 from Project 2015-09. A voltage limitation could be included to drive consistency—i.e. after “Transmission substation(s)” in the suggested option add “operated at 200 kV and above”.

Criterion 4 refers back, essentially, to NUC-001 which does not capitalize Facilities in Requirement 9 Part 9.2.2. This is yet another reason to consider Transmission station(s) and Transmission substation(s) instead of Transmission Facilities. Should this Criterion also consider Contingencies associated with the Transmission substation(s) and Transmission station(s) identified as “essential for meeting the NPIRs”?

Just to be clear, this criteria includes underground Transmission station(s) and Transmission substation(s), correct?

Consider inclusion of criteria for levels of generation within a substation or substations within the proximity determined. Simply looking at Transmission overlooks a significant risk as Transmission substations can be rebuilt quickly when compared to rebuilding or fixing a set of generators.

Likes 0	
Dislikes 0	

Response

Jodirah Green - ACES Power Marketing - 1,3,4,5,6 - MRO,WECC,Texas RE,SERC,RF, Group Name ACES Collaborators

Answer	Yes
Document Name	

Comment
ACES agrees with moving the Applicability to Attachment 1. While ACES agrees with the question asked, Criterion 2.1 from Attachment 1 is beyond the scope of the SAR. Further, Criterion 2.1 could create a situation where one entity identifies an Applicable substation when considered with another adjacent entity's substation. The other entity may have a different proximity criteria and not considered an Applicable substation when both should be applicable.

Likes 0	
Dislikes 0	

Response

Robert Follini - Avista - Avista Corporation - 3

Answer	Yes
Document Name	

Comment

Likes 0	
Dislikes 0	

Response

James Keele - Entergy - 3

Answer	Yes
Document Name	

Comment

Likes 0	
Dislikes 0	

Response

Rebika Yitna - Rebika Yitna On Behalf of: Roger Brand, MEAG Power, 3, 1; - Rebika Yitna

Answer	Yes
Document Name	

Comment

Likes 0	
Dislikes 0	
Response	
Jay Sethi - Manitoba Hydro - 1,3,5,6 - MRO, Group Name Manitoba Hydro Group	
Answer	Yes
Document Name	
Comment	
Likes 0	
Dislikes 0	
Response	
Kelley Sargent - Puget Sound Energy, Inc. - 3	
Answer	Yes
Document Name	
Comment	
Likes 0	
Dislikes 0	
Response	
Lucinda Bradshaw - Oncor Electric Delivery - 1 - Texas RE	
Answer	Yes
Document Name	
Comment	
Likes 0	
Dislikes 0	
Response	
Alison Nickells - NiSource - Northern Indiana Public Service Co. - 1 - RF	

Answer	Yes
Document Name	
Comment	
Likes 0	
Dislikes 0	
Response	
Tyler Schwendiman - ReliabilityFirst - 10	
Answer	Yes
Document Name	
Comment	
Likes 0	
Dislikes 0	
Response	
Michele Tondalo - United Illuminating Co. - 1	
Answer	Yes
Document Name	
Comment	
Likes 0	
Dislikes 0	
Response	
Michele Shafer - New York State Electric & Gas (NYSEG) - 6	
Answer	Yes
Document Name	
Comment	
Likes 0	

Dislikes 0	
Response	
TRACEY JOHNSON - Southern Indiana Gas and Electric Co. - 3,5,6 - RF	
Answer	Yes
Document Name	
Comment	
Likes 0	
Dislikes 0	
Response	
Diana Aguas - CenterPoint Energy Houston Electric, LLC - 1 - Texas RE	
Answer	Yes
Document Name	
Comment	
Likes 0	
Dislikes 0	
Response	
Anne Kronshage - Public Utility District No. 1 of Chelan County - 6, Group Name Public Utility District No. 1 of Chelan County - Voting Group	
Answer	Yes
Document Name	
Comment	
Likes 0	
Dislikes 0	
Response	
John Pearson - ISO New England, Inc. - 2	
Answer	Yes

Document Name	
Comment	
Likes 0	
Dislikes 0	
Response	
Teresa Krabe - Lower Colorado River Authority - 5	
Answer	Yes
Document Name	
Comment	
Likes 0	
Dislikes 0	
Response	
Jeffrey Streifling - NB Power Corporation - 1	
Answer	Yes
Document Name	
Comment	
Likes 0	
Dislikes 0	
Response	
Mark Flanary - Midwest Reliability Organization - 10	
Answer	Yes
Document Name	
Comment	
Likes 0	
Dislikes 0	

Response	
Rachel Coyne - Texas Reliability Entity, Inc. - 10	
Answer	Yes
Document Name	
Comment	
Likes 0	
Dislikes 0	
Response	
Chantal Mazza - Chantal Mazza On Behalf of: Junji Yamaguchi, Hydro-Quebec (HQ), 1, 5; Nicolas Turcotte, Hydro-Quebec (HQ), 1, 5; - Chantal Mazza	
Answer	Yes
Document Name	
Comment	
Likes 0	
Dislikes 0	
Response	
Fon Hiew - NB Power Corporation - New Brunswick Power Transmission Corporation - 5	
Answer	Yes
Document Name	
Comment	
Likes 0	
Dislikes 0	
Response	
James Baldwin - James Baldwin On Behalf of: Matt Lewis, Lower Colorado River Authority, 5, 1; - James Baldwin	
Answer	Yes

Document Name	
Comment	
Likes 0	
Dislikes 0	
Response	
Ruida Shu - Northeast Power Coordinating Council - 1,2,3,4,5,6,7,8,9,10 - NPCC, Group Name NPCC RSC	
Answer	Yes
Document Name	
Comment	
Likes 0	
Dislikes 0	
Response	
Mike Magruder - Avista - Avista Corporation - 1,3,5	
Answer	Yes
Document Name	
Comment	
Likes 0	
Dislikes 0	
Response	
Michael Jang - Seattle City Light - 1	
Answer	Yes
Document Name	
Comment	
Likes 0	
Dislikes 0	

Response	
Daren Brubaker - Seattle City Light - 6	
Answer	Yes
Document Name	
Comment	
Likes 0	
Dislikes 0	
Response	
Chris Wagner - Santee Cooper - 1, Group Name Santee Cooper	
Answer	Yes
Document Name	
Comment	
Likes 0	
Dislikes 0	
Response	

2. Do you agree with the modifications made in CIP-014-4 with modified Requirement R1 to address the issues identified in the SAR?	
Jodirah Green - ACES Power Marketing - 1,3,4,5,6 - MRO,WECC,Texas RE,SERC,RF, Group Name ACES Collaborators	
Answer	No
Document Name	
Comment	
ACES agrees with the changes, but recommends changing Attachment 1 to remove the reference to R2. This allows R1 and R2 to standalone leaving R1 for the identification of applicability and R2 for proximity criteria.	
Likes 0	
Dislikes 0	
Response	
Jason Snodgrass - Jason Snodgrass On Behalf of: Katrina Lyons, Georgia System Operations Corporation, 3, 4; - Jason Snodgrass	
Answer	No
Document Name	
Comment	
GSOC supports comments provided by Georgia Transmission	
Likes 0	
Dislikes 0	
Response	
Amy Wesselkamper - PNM Resources - Public Service Company of New Mexico - 3	
Answer	No
Document Name	CIP-014-4 Draft 1, Question 2 PNM_TNMP response.docx
Comment	
PNM and TNMP support EEI comments regarding R1, noted again here. Additionally, please see **document attached** in this question response. PNM and TNMP offer additional comments and illustrative diagram for SDT consideration. *"EEI proposes the following modifications:* *Add 'calendar' to Requirement R1, Part 1.2 to ensure that entities continue to have the same flexibility afforded to them under CIP-014-3 to align with calendar months instead of specific dates:*	

*1.2 Review the list every 36 **calendar** months and update the list, if necessary.*

Suggest changing the text of R1.3 to read as follows:

*If the Transmission Owner identifies no applicable Transmission station(s) and **or** Transmission substation(s), then no additional actions are required to fulfill the remainder of the standard."*

Likes 0	
Dislikes 0	

Response

Gail Elliott - Gail Elliott On Behalf of: Michael Moltane, International Transmission Company Holdings Corporation, 1; - Gail Elliott

Answer	No
Document Name	

Comment

ITC supports the EEI response

Likes 0	
Dislikes 0	

Response

Stephanie Kenny - Edison International - Southern California Edison Company - 6

Answer	No
Document Name	

Comment

See EEI comments

Likes 0	
Dislikes 0	

Response

Dwanique Spiller - Berkshire Hathaway - NV Energy - 5

Answer	No
Document Name	

Comment

NV Energy supports the EEI response to this question.

Likes 0	
Dislikes 0	

Response

Selene Willis - Edison International - Southern California Edison Company - 5

Answer	No
Document Name	

Comment

See comments submitted by the Edison Eclectic Institute

Likes 0	
Dislikes 0	

Response

Stephen Stafford - Stephen Stafford On Behalf of: Greg Davis, Georgia Transmission Corporation, 1; - Stephen Stafford

Answer	No
Document Name	

Comment

The concept of the risk assessment in the currently approved standard and this draft is ambiguous and is interpreted differently across the industry. The standard requirements need additional clarification as to what type of risk (explosive, gunshot, etc) the TO should be protecting against. It is important to keep in mind that the clarification on the risk should take into account the premise that physical security measures may be installed pursuant to the assessment of this risk.

Likes 0	
Dislikes 0	

Response

Kristine Martz - Edison Electric Institute - NA - Not Applicable - NA - Not Applicable

Answer	No
Document Name	

Comment

EEI proposes the following modifications:

Add ‘calendar’ to Requirement R1, Part 1.2 to ensure that entities continue to have the same flexibility afforded to them under CIP-014-3 to align with calendar months instead of specific dates:

1.2 Review the list every 36 **calendar** months and update the list, if necessary.

Suggest changing the text of R1.3 to read as follows:

If the Transmission Owner identifies no applicable Transmission station(s) **or** Transmission substation(s), no additional actions are required to fulfill the remainder of the standard.

Likes 0	
Dislikes 0	

Response

David Jendras Sr - Ameren - Ameren Services - 3

Answer	No
Document Name	

Comment

Ameren supports EEI's comments on this project.

Likes 0	
Dislikes 0	

Response

Hillary Creurer - Allete - Minnesota Power, Inc. - 1

Answer	No
Document Name	

Comment

Minnesota Power supports MRO-NSRF and EEI's comments.

Likes 0	
Dislikes 0	

Response

Andy Fuhrman - Andy Fuhrman On Behalf of: Theresa Allard, Minnkota Power Cooperative Inc., 1; - Andy Fuhrman	
Answer	No
Document Name	
Comment	
MPC concurs with the MRO NSRF's comments regarding combining R1 and R2. MPC strongly disagrees with the use of a 36 month timeframe for utilities who have not previously identified stations or substations as critical for the same reasons specified in our comments for question 6.	
Likes 0	
Dislikes 0	
Response	

Mark Flanary - Midwest Reliability Organization - 10	
Answer	No
Document Name	
Comment	
MRO is supportive of the proposed timeframe, however the language of R1.2 indicating "every 36 months" is unnecessarily strict. Consider softening to "at least every 36 months" or something similar that drives towards performance with a frequency no greater than every 36 months.	
Likes 0	
Dislikes 0	
Response	

Dave Krueger - SERC Reliability Corporation - 10	
Answer	No
Document Name	
Comment	
Thank you for the chance to comment, SERC appreciates the complexity of the SDT's task of modifying multiple parts of such a high profile and high-priority standard. · Item #1.A: R1 seems to be missing a key item from the SAR, under Detailed Description #2: "Revisions to the risk assessment should be made to only include transmission and generation projects that are appropriate to the periodicity of the entity's risk assessments. " This precept goes to both applicability and model accuracy, but is key that notional/planned transmission improvements that may be implemented beyond the 36 month study period are not considered. Planned transmission projects outside that 36 month time horizon could possibly be considered for Resiliency measures in R9.1. · Item #1.B: The previous CIP-014-3 R1 requirement did not address applicability separately, and thus implied the applicable list of stations to be studied would be up-to-date and accurate as of the date of performance of CIP-014-3 R1 upon its 30 or 60 month cycle. However, now that R1 and R5	

are separate requirements, an issue of accuracy or fidelity could emerge if R1 (which is now an untimed/undated requirement) was performed too many months/years prior to the performance of R5. This could result in a R1 (and downstream R2) list that was accurate at the time of preparation, but 'stale' by the time of R5 performance. The SAR seems to address this under Detailed Description Item #2: "Revisions to the risk assessment should be made to only include transmission and generation projects that are appropriate to the periodicity of the entity's risk assessments." as well as in the SAR Project Scope #2's reference of correction of discrepancies. We would suggest either introducing a timing component to R1 to ensure fidelity, or a accuracy component to R5 to ensure the R1 (and downstream R2) lists used are still accurate as of the time of the dated completion of R5.	
Likes 0	
Dislikes 0	
Response	
Israel Perez - Israel Perez On Behalf of: Laura Somak, Salt River Project, 3, 6, 5, 1; Mathew Weber, Salt River Project, 3, 6, 5, 1; Thomas Johnson, Salt River Project, 3, 6, 5, 1; Timothy Singh, Salt River Project, 3, 6, 5, 1; - Israel Perez	
Answer	No
Document Name	
Comment	
SRP supports the MRO NSRF with Tacoma Power's comments.	
Likes 0	
Dislikes 0	
Response	
Devin Shines - PPL - Louisville Gas and Electric Co. - 1,3,5,6 - SERC,RF	
Answer	No
Document Name	
Comment	
Louisville Gas & Electric and Kentucky Utilities support EEI's comments.	
Likes 0	
Dislikes 0	
Response	
Andrew Smith - APS - Arizona Public Service Co. - 5	
Answer	No
Document Name	

Comment
AZPS supports EEI’s proposal to utilize “calendar” months in R1.

Likes 0	
Dislikes 0	

Response

Joshua London - Eversource Energy - 1, Group Name Eversource	
Answer	No
Document Name	

Comment
Eversource is looking for clarity on what is meant by the phrase “planned to be” in service. Requirement R1.2 also seems unnecessary. With the defined time period in R1.1 and the risk assessment cycle defined by R5, Eversource recommends the removal of R1.2 for brevity and clarity. Eversource also believes that R1 should be solely about developing a list whereas R2 should define the stations that need to be included. See below for a proposed modification moving parts of R1 into R2. **R1.** Each Transmission Owner shall establish and maintain a list of applicable Transmission station(s) and Transmission substation(s) for performing risk assessments in accordance with the criteria in Attachment 1. Each Transmission Owner shall: *[Violation Risk Factor: High; Time-Horizon: Long-term Planning]* **1.1.** Consider all Transmission station(s) and Transmission substation(s) that are existing or planned to be in service within 36 months; and **1.2.** Review the list every 36 months and update the list, if necessary. **1.3.** If the Transmission Owner identifies no applicable Transmission station(s) and Transmission substation(s), then no additional actions are required to fulfill the remainder of the standard **R2.** Each Transmission Owner shall establish and implement documented criteria for

identifying Transmission station(s) and Transmission substation(s) **in accordance with Attachment 1, as well as stations in proximity to those identified through Attachment 1**, irrespective of ownership, that shall be included in the risk assessment. . *[Violation Risk Factor: Medium; Time-Horizon: Long-term*

Planning]

2.1. The criteria shall at a minimum include the following:

2.1.1. Line-of-sight between multiple Transmission station or Transmission

substation yards from a single site.

2.1.2. Ease of access from a common public roadway that exists between

multiple Transmission station or Transmission substation yards.

2.1.3. The Transmission station or Transmission substation yards are in close

enough proximity that a single event can impact multiple Transmission

stations or Transmission substations.

2.2. If the Transmission Owner identifies no applicable Transmission station(s) and

Transmission substation(s), then no additional actions are required to fulfill the

remainder of the standard.

Likes 0	
Dislikes 0	

Response

Sean Bodkin - Dominion - Dominion Resources, Inc. - 6, Group Name Dominion

Answer	No
Document Name	

Comment

Dominion Energy supports EEI Comments.

In addition to EEI comments, Dominion Energy considers that 36 months for planned substations is not realistic based on delays due to construction, supply chain, outage planning and PJM planning horizons.

Dominion Energy has the same issue with R1.2 as 36 months is not realistic due to the uncertainty on actual system configuration changes.

Likes 0	
Dislikes 0	

Response	
Ellese Murphy - Duke Energy - 1,3,5,6 - Texas RE,SERC,RF	
Answer	No
Document Name	
Comment	
Duke Energy supports the revisions to clarify the timeline for the performance of R1 requirements but requests additional clarity if the 36-month timeframe starts from the time of the completion of the risk assessments. Duke Energy also supports EEI comments.	
Likes 0	
Dislikes 0	
Response	
Rachel Schuldt - Black Hills Corporation - 6, Group Name Black Hills Corporation - All Segments	
Answer	No
Document Name	
Comment	
Black Hills Corporation agrees with EEI comments and proposed modifications.	
Likes 0	
Dislikes 0	
Response	
Donna Wood - Tri-State G and T Association, Inc. - 1	
Answer	No
Document Name	
Comment	
Tri-State agrees with the MRO NSRF Submitted Comments	
Likes 0	

Dislikes 0	
Response	
Richard Vendetti - NextEra Energy - 5	
Answer	No
Document Name	
Comment	

NEE support's EEI comments: " EEI proposes the following modifications:

Add 'calendar' to Requirement R1, Part 1.2 to ensure that entities continue to have the same flexibility afforded to them under CIP-014-3 to align with calendar months instead of specific dates:

{C}1.2 Review the list every 36 **calendar** months and update the list, if necessary.

Suggest changing the text of R1.3 to read as follows:

If the Transmission Owner identifies no applicable Transmission station(s) and **or** Transmission substation(s), then no additional actions are required to fulfill the remainder of the standard. "

Likes 0	
Dislikes 0	
Response	
Jennifer Bray - Arizona Electric Power Cooperative, Inc. - 1	
Answer	No
Document Name	
Comment	

AEPC signed on to ACES comments below:

ACES agrees with the changes, but recommends changing Attachment 1 to remove the reference to R2. This allows R1 and R2 to standalone leaving R1 for the identification of applicability and R2 for proximity criteria.

Likes 0	
Dislikes 0	

Response	
Anne Kronshage - Public Utility District No. 1 of Chelan County - 6, Group Name Public Utility District No. 1 of Chelan County - Voting Group	
Answer	No
Document Name	
Comment	

Comments: In the SAR, there were 5 objectives listed in the Project scope:

1. Clarify the risk assessment methods for studying instability, uncontrolled separation, and Cascading within an Interconnection. The methods should account for dynamic studies.

Adequately addressed.

2. Clarify the case(s) used for the risk assessment to be tailored to the Requirement R1 in-service window and correct any discrepancies between the study period, frequency of study, and the base case(s) a Transmission Owner uses.

Not adequately addressed – the study window is not clarified. This generally appears to be a study in the operations horizon, yet the 36 month proposed window is beyond the operations horizon. For applicability, a Transmission Operator may not have sufficient station information to perform its required assessment for a station that has not been constructed. Furthermore, for system changes that could occur within this 36 month window (such as station modifications to protection or bus design, or physical security changes such as hardening access or 'line of sight'), this proposal does not speak to which 'version' of the system state (present or future-36 months) is to be studied. For example, if a station is known to cause instability for a particular event, but has a Corrective Action Plan to be implemented within the year to mitigate that instability, is it appropriate to include the Corrective Action Plan in the assumptions of the study? In summary, these sorts of issues were not clarified in this new revision, and further clarification is requested.

3. Assure the adequacy and consistent implementation of technically supported justification for study decisions. Clarity should include specificity regarding the documentation, and usage of criteria to identify instability, uncontrolled separation, or Cascading within an Interconnection occur as part of a risk assessment.

Adequately addressed.

4. Clarify what study scenario(s) and other study assumptions are appropriate and reasonable considering the intent of CIP-014-3 and the potential range of issues during a physical attack. Simulations should incorporate the loss of station elements without the reliance on local system protection.

Adequately addressed.

5. Clarify how to account for adjacent Transmission stations or Transmission substations of differing ownership as well as for those Transmission stations or Transmission substations within line-of-sight to each other. *This was listed as an item to modify R1, but ended up being in the new proposed version's R2.*

Not adequately addressed – the term 'line-of-sight' is vague and ambiguous. This has not had much technical discussion to support inclusion in a regulatory standard. For example, if one were to hike to the top of a very tall mountain, there are multiple substations that are within 'line of sight', yet a common attack vector would not likely impact all the stations that could be seen. NERC's intent is more likely in the flavor of 'what's in the neighborhood' and trying to establish some sort of proximity rationale here, but line-of-sight is likely a wrong word choice to express this concept of adjacencies. Similarly, in the subsequent build-up of R2 in addressing proximity, 'Ease of access' (R2.1.2) and 'close proximity…that a single event could impact…' (R2.1.3) are equally vague without supporting examples of intent from NERC. Ease of access may be difficult for a vehicle, but quite easy for a drone, helicopter, or other aerial device, or if near water, a boat may easily access sites that are difficult for automobile. Similarly, the impact zone of a single event could be small if a low capacity home-made device, but quite large if a nuclear device. NERC's new proposed language is ambiguous on what is acceptable. While it is noted this is ultimately criteria to be determined by the Transmission Owner, the ambiguities could lead to

disagreements between Transmission Owners and regulators and audit staff over adequacy, where the expectation of levels of adequacy is not defined in the standard nor discussed in the Technical Rationale. It is requested these topics be revisited in light of these considerations.	
Likes 0	
Dislikes 0	
Response	
Michael Dillard - Austin Energy - 5, Group Name Austin Energy	
Answer	No
Document Name	
Comment	
Austin Energy supports MRO's comments. Attached in Question 1.	
Likes 0	
Dislikes 0	
Response	
Ben Hammer - Western Area Power Administration - 1	
Answer	No
Document Name	
Comment	
WAPA concurs with the use of the 36 month timeframe in the draft R1. WAPA recommends removing the circular reference to R2 in Attachment 1, and keep R1 strictly to determining the applicability list for study. Requirement R1.3 states that no further action is required if no applicable Transmission stations are identified, however, in order to complete this identification, then R2 must be completed. In addition, WAPA recommends the removal of Criterion 2.1 in Attachment 1, in accordance with comments submitted in Q1.	
Likes 0	
Dislikes 0	
Response	
Karen Demos - NextEra Energy - Florida Power and Light Co. - 3	
Answer	No
Document Name	

Comment	
NextEra/FPL supports EEI's comments	
Likes 0	
Dislikes 0	
Response	
Cain Braveheart - Bonneville Power Administration - 1,3,5,6 - WECC	
Answer	No
Document Name	
Comment	
BPA believes the rewritten R1 seems to be intended to create auditable documentation of the same outcome that is already achieved when a Registered Entity evaluates the current Applicability section.	
Likes 0	
Dislikes 0	
Response	
Alan Kloster - Alan Kloster On Behalf of: Jeremy Harris, Evergy, 3, 5, 1, 6; Kevin Frick, Evergy, 3, 5, 1, 6; Marcus Moor, Evergy, 3, 5, 1, 6; Tiffany Lake, Evergy, 3, 5, 1, 6; - Alan Kloster	
Answer	No
Document Name	
Comment	
Evergy supports and incorporates by reference the comments of the Edison Electric Insitute (EEI) and MRO NSRF for question #2.	
Likes 0	
Dislikes 0	
Response	
Anna Martinson - MRO - 1,2,3,4,5,6 - MRO, Group Name MRO Group	
Answer	No
Document Name	
Comment	

The MRO NSRF concurs with the use of the 36 month timeframe in the draft R1.

The MRO NSRF recommends removing the circular reference to R2 in Attachment 1, and keep R1 strictly to determining the applicability list for study. Requirement R1.3 states that no further action is required if no applicable Transmission stations are identified, however, in order to complete this identification, then R2 must be completed. In addition, the MRO NSRF recommends the removal of Criterion 2.1 in Attachment 1, in accordance with comments submitted in Q1.

Likes 1	Lincoln Electric System, 1, Johnson Josh
Dislikes 0	

Response

Michele Shafer - New York State Electric & Gas (NYSEG) - 6

Answer	No
Document Name	

Comment

- CIP-014-4 R1 requires the Transmission Owner to "…establish and maintain a list of applicable Transmission station(s) and Transmission substation(s)…" while R1.1 specifies that it must consider station(s) that are "…existing or planned to be in service within 36 months…" The phrasing could be interpreted that the list must be updated continuously and not just when it is reviewed. Suggest that R1 be modified to state that: "Each Transmission Owner shall **have a list** of applicable…." And let R1.1 and R1.2 specify how it is updated.
- NERC utilizes the term calendar months; suggest that R1.1 be reworded to use the term "…within 36 **calendar** months…"
- In CIP-014-4 R1.2 the list review cadence is listed as "…every 36 months…" which is a very specific timeframe and hypothetically if the list is updated at 35 months it would not be in compliance. Suggest the phrasing be updated to: "Review the list **at least once every** 36 calendar months…"
- The stations identified in R2 must be included in the assessment in R3 but there is no requirement to add them to the R1 list as this list is derived from only Attachment 1. Suggest that the wording be added to the standard requiring all stations included in the assessment to be added to the R1 list and are periodically reviewed/updated.

Likes 0	
Dislikes 0	

Response

Michele Tondalo - United Illuminating Co. - 1

Answer	No
Document Name	

Comment

Comment 1: CIP-014-4 R1 requires the Transmission Owner to "…establish and **maintain** a list of applicable Transmission station(s) and Transmission substation(s)…" while R1.1 specifies that it must consider station(s) that are "…existing or planned to be in service within 36 months…" The phrasing could be interpreted that the list must be updated continuously and not just when it is reviewed. Suggest that R1 be modified to state that:

"Each Transmission Owner shall have a list of applicable…." And let R1.1 and R1.2 specify how it is updated.

Comment 2: NERC utilizes the term calendar months; suggest that R1.1 be reworded to use the term "…within 36 calendar months…"

Comment 3: In CIP-014-4 R1.2 the list review cadence is listed as "…every 36 months…" which is a very specific timeframe and hypothetically if the list is updated at 35 months it would not be in compliance. Suggest the phrasing be updated to:

"Review the list at least once every 36 calendar months…"

Comment 4: The stations identified in R2 must be included in the assessment in R3 but there is no requirement to add them to the R1 list as this list is derived from only Attachment 1. Suggest that the wording be added to the standard requiring all stations included in the assessment to be added to the R1 list and are periodically reviewed/updated.

Likes 0	
Dislikes 0	

Response

Lucinda Bradshaw - Oncor Electric Delivery - 1 - Texas RE

Answer	No
Document Name	

Comment

Oncor does not agree with the use of 36 months because that time frame is beyond Oncor's accurate planning frame, particularly given the current large amount of growth in Oncor's service area. Oncor recommends no longer than 24 months be used.

Likes 0	
Dislikes 0	

Response

Kelley Sargent - Puget Sound Energy, Inc. - 3

Answer	No
Document Name	

Comment

We agree with the intent of CIP-014-4 to address issues identified in the SAR, however we would like to suggest changes to improve readability.
There is some interplay between R1 and R2 through Attachment 1 that makes identification of "applicable" stations confusing. R1 refers to Attachment 1

to identify “applicable” stations based on the weighting criteria in Table 1. Attachment 1 section 2.1 requires user to refer to R2 and apply proximity criteria to stations that were not applicable in R1.

To meet the intent of SAR to identify station “groups” that meet applicability criteria of Attachment 1, it may be best to identify station groups separately under R2 as a sub-requirement (i.e. move Section 2.1 from Attachment 1 to sub-requirement R2.2) and make Attachment 1 agnostic of stations or station groups. This separates intent of R1 and R2 and allows both requirements to reference Attachment 1 applicability criteria. R1 will identify individual stations that meet Attachment 1 applicability criteria. R2 will identify station groups with stations that were individually non-applicable under R1, but when combined with other non-applicable station(s) - based on proximity criteria of R2, may be applicable per Attachment 1 Table 1.

Likes 0	
Dislikes 0	

Response

Jennie Wike - Jennie Wike On Behalf of: John Merrell, Tacoma Public Utilities (Tacoma, WA), 1, 4, 5, 6, 3; - Jennie Wike, Group Name Tacoma Power

Answer	No
Document Name	

Comment

Tacoma Power supports the MRO NSRF comments, as follows.

The MRO NSRF concurs with the use of the 36 month timeframe in the draft R1.

The MRO NSRF recommends removing the circular reference to R2 in Attachment 1, and keep R1 strictly to determining the applicability list for study. Requirement R1.3 states that no further action is required if no applicable Transmission stations are identified, however, in order to complete this identification, then R2 must be completed. In addition, the MRO NSRF recommends the removal of Criterion 2.1 in Attachment 1, in accordance with comments submitted in Q1.

Likes 0	
Dislikes 0	

Response

Kevin Conway - Western Power Pool - 4

Answer	No
Document Name	

Comment

The CIP-014 modifications seem objective and responsive to the SAR, however a deeper reading of R2 and R3 indicate that the Drafting Team is allowing each entity the latitude for flexibility in it’s criteria and methodologies. This continues the inconsistencies in CIP-014 Risk Assessments between entities. “The requirement language within CIP-014-3 does not prescribe a specific method for how each risk assessment shall be performed.” (see

2023-06 CIP SAR 07262023 pg.2) The current proposal adds a list of items to be included, but falls short of the goal to ensure consistency between entities.	
Likes 0	
Dislikes 0	
Response	
Alison Nickells - NiSource - Northern Indiana Public Service Co. - 1 - RF	
Answer	No
Document Name	
Comment	
Likes 0	
Dislikes 0	
Response	
Steven Rueckert - Western Electricity Coordinating Council - 10, Group Name WECC Entity Monitoring	
Answer	Yes
Document Name	
Comment	
Maintaining a list is appropriate. Ensuring how the list is addressed within the assessment for each Transmission station and Transmission substation will be critical and indicates that assessments should be done sequentially/chronologically to effectively represent the configuration being assessed. Suggest adjusting language in Requirement R1.1 to “Include” versus “Consider”. Also, later on in the Standard “calendar months” is used versus simply “months”. Please consider adjusting for consistency all period descriptions to one or the other. For Requirement R1.3 consider: “If the Transmission Owner identifies no applicable Transmission station(s) and Transmission substation(s) using the criterion in Attachment 1, then document the condition accordingly.” There may actually be actions required if a Transmission Owner having an applicable Transmission station or Transmission substation has a Transmission Line emanating from the applicable Transmission station/Transmission substation that terminates in a different Transmission Owner’s Transmission station or Transmission substation meeting the criteria in Requirement R2. In turn, the two Transmission Owner’s may need to coordinate actions as Requirement R4 states. SDT can provide the clarity needed as the condition exists and the second Transmission Owner may need to consider the loss of the proximity-based included Transmission station/substation in its own risk assessments. If the DT elects not to remove the phrase regarding “no additional actions”, update “standard” to “reliability Standard” for consistency.	
Likes 0	
Dislikes 0	
Response	
Daniel Gacek - Exelon - 1, Group Name Exelon	

Answer	Yes
Document Name	
Comment	
Exelon supports the EEI comment to add "calendar" to the timeframe stated in 1.2.	
Likes 0	
Dislikes 0	
Response	
John Pearson - ISO New England, Inc. - 2	
Answer	Yes
Document Name	
Comment	
While we agree that the modification meets the intent of the SAR, sub-requirement R1.2 should be modified to allow some flexibility in review timing. Change wording to "Review the list **at least** every 36 months and update the list, if necessary.	
Likes 0	
Dislikes 0	
Response	
Brian Millard - Tennessee Valley Authority - 1,3,5,6 - SERC, Group Name TVA RBB	
Answer	Yes
Document Name	
Comment	
TVA agrees with the modifications to R1, aligning facility in-service dates, list creation, and list review timelines 36 months. TVA again states an objection to the modified Applicability criteria, specifically to evaluate nonapplicable facilities in aggregate, per Attachment 1.	
Likes 0	
Dislikes 0	
Response	
Mark Garza - FirstEnergy - FirstEnergy Corporation - 4, Group Name FE Voter	
Answer	Yes

Document Name	
Comment	
FirstEnergy has no objection to the modifications made to R1.	
Likes 0	
Dislikes 0	
Response	
Tyler Schwendiman - ReliabilityFirst - 10	
Answer	Yes
Document Name	
Comment	
For R1.1.2, is the verbiage “, if necessary” needed? The list should be reviewed every 36 months.	
Likes 0	
Dislikes 0	
Response	
Jay Sethi - Manitoba Hydro - 1,3,5,6 - MRO, Group Name Manitoba Hydro Group	
Answer	Yes
Document Name	
Comment	
Manitoba Hydro recommends removing the circular reference to R2 in Attachment 1. Requirement R1.3 states that no further action is required if no applicable Transmission stations are identified, however, in order to complete this identification, R2 must be completed. To resolve this, R1 and R2 can be combined in to one requirement for the scope of the study.	
Likes 0	
Dislikes 0	
Response	
Chris Wagner - Santee Cooper - 1, Group Name Santee Cooper	
Answer	Yes
Document Name	

Comment	
Likes 0	
Dislikes 0	
Response	
Zenon O'young-Chu - Seattle City Light - 3	
Answer	Yes
Document Name	
Comment	
Likes 0	
Dislikes 0	
Response	
Daren Brubaker - Seattle City Light - 6	
Answer	Yes
Document Name	
Comment	
Likes 0	
Dislikes 0	
Response	
Robert Jones - Seattle City Light - 4	
Answer	Yes
Document Name	
Comment	
Likes 0	
Dislikes 0	
Response	

Carver Powers - Utility Services, Inc. - 4	
Answer	Yes
Document Name	
Comment	
Likes 0	
Dislikes 0	
Response	
Chris Shultz - Seattle City Light - 5	
Answer	Yes
Document Name	
Comment	
Likes 0	
Dislikes 0	
Response	
Michael Jang - Seattle City Light - 1	
Answer	Yes
Document Name	
Comment	
Likes 0	
Dislikes 0	
Response	
Mike Magruder - Avista - Avista Corporation - 1,3,5	
Answer	Yes
Document Name	
Comment	

Likes 0	
Dislikes 0	
Response	
Ruida Shu - Northeast Power Coordinating Council - 1,2,3,4,5,6,7,8,9,10 - NPCC, Group Name NPCC RSC	
Answer	Yes
Document Name	
Comment	
Likes 0	
Dislikes 0	
Response	
Jesus Sammy Alcaraz - Imperial Irrigation District - 1	
Answer	Yes
Document Name	
Comment	
Likes 0	
Dislikes 0	
Response	
Denise Sanchez - Denise Sanchez On Behalf of: Diana Torres, Imperial Irrigation District, 1, 6, 5, 3; George Kirschner, Imperial Irrigation District, 1, 6, 5, 3; Jesus Sammy Alcaraz, Imperial Irrigation District, 1, 6, 5, 3; Tino Zaragoza, Imperial Irrigation District, 1, 6, 5, 3; - Denise Sanchez	
Answer	Yes
Document Name	
Comment	
Likes 0	
Dislikes 0	
Response	

James Baldwin - James Baldwin On Behalf of: Matt Lewis, Lower Colorado River Authority, 5, 1; - James Baldwin	
Answer	Yes
Document Name	
Comment	
Likes 0	
Dislikes 0	
Response	
Fon Hiew - NB Power Corporation - New Brunswick Power Transmission Corporation - 5	
Answer	Yes
Document Name	
Comment	
Likes 0	
Dislikes 0	
Response	
Chantal Mazza - Chantal Mazza On Behalf of: Junji Yamaguchi, Hydro-Quebec (HQ), 1, 5; Nicolas Turcotte, Hydro-Quebec (HQ), 1, 5; - Chantal Mazza	
Answer	Yes
Document Name	
Comment	
Likes 0	
Dislikes 0	
Response	
Rachel Coyne - Texas Reliability Entity, Inc. - 10	
Answer	Yes
Document Name	

Comment	
Likes 0	
Dislikes 0	
Response	
Jeffrey Streifling - NB Power Corporation - 1	
Answer	Yes
Document Name	
Comment	
Likes 0	
Dislikes 0	
Response	
Teresa Krabe - Lower Colorado River Authority - 5	
Answer	Yes
Document Name	
Comment	
Likes 0	
Dislikes 0	
Response	
Tim Kelley - Tim Kelley On Behalf of: Charles Norton, Sacramento Municipal Utility District, 3, 6, 4, 1, 5; Foung Mua, Sacramento Municipal Utility District, 3, 6, 4, 1, 5; Kevin Smith, Balancing Authority of Northern California, 1; Nicole Looney, Sacramento Municipal Utility District, 3, 6, 4, 1, 5; Ryder Couch, Sacramento Municipal Utility District, 3, 6, 4, 1, 5; Wei Shao, Sacramento Municipal Utility District, 3, 6, 4, 1, 5; - Tim Kelley, Group Name SMUD and BANC	
Answer	Yes
Document Name	
Comment	
Likes 0	

Dislikes 0	
Response	
Diana Aguas - CenterPoint Energy Houston Electric, LLC - 1 - Texas RE	
Answer	Yes
Document Name	
Comment	
Likes 0	
Dislikes 0	
Response	
TRACEY JOHNSON - Southern Indiana Gas and Electric Co. - 3,5,6 - RF	
Answer	Yes
Document Name	
Comment	
Likes 0	
Dislikes 0	
Response	
Leshel Hutchings - AEP - 3	
Answer	Yes
Document Name	
Comment	
Likes 0	
Dislikes 0	
Response	
Rebika Yitna - Rebika Yitna On Behalf of: Roger Brand, MEAG Power, 3, 1; - Rebika Yitna	
Answer	Yes

Document Name	
Comment	
Likes 0	
Dislikes 0	
Response	
Matt Carden - Southern Company - Southern Company Services, Inc. - 1	
Answer	Yes
Document Name	
Comment	
Likes 0	
Dislikes 0	
Response	
Richard Jackson - U.S. Bureau of Reclamation - 1	
Answer	Yes
Document Name	
Comment	
Likes 0	
Dislikes 0	
Response	
James Keele - Entergy - 3	
Answer	Yes
Document Name	
Comment	
Likes 0	
Dislikes 0	

Response	
Robert Follini - Avista - Avista Corporation - 3	
Answer	Yes
Document Name	
Comment	
Likes 0	
Dislikes 0	
Response	
Jessica Cordero - Unisource - Tucson Electric Power Co. - 1	
Answer	Yes
Document Name	
Comment	
Likes 0	
Dislikes 0	
Response	

3. Do you agree with the modifications made in CIP-014-4 with new Requirement R2 to address the issues identified in the SAR?

Jessica Cordero - Unisource - Tucson Electric Power Co. - 1

Answer	No
Document Name	

Comment

Need further clarification on responsibilities related to separately owned but physically adjacent facilities.

Likes 0	
Dislikes 0	

Response

James Keele - Entergy - 3

Answer	No
Document Name	

Comment

R2.1. terms “line-of-site,” “proximity,” and “ease of access” are interpretive and could result in inconsistent implementation of the standard.R2 should reference Attachment 1 and not R1. “In proximity to those identified in R1” implies you have evaluated Attachment 1 and have the full R1 list and then you have to reapply the proximity criteria to the full list. Consider revising language to state the intent more clearly. For example:

{C}· *R2. Each Transmission Owner shall establish a documented criteria for identifying Transmission station(s) and Transmission substation(s) in proximity. The criteria shall be used during the evaluation of Attachment 1 2.1 to identify Transmission station(s) and Transmission substation(s), irrespective of ownership, to be included in the risk assessment.*

Likes 0	
Dislikes 0	

Response

Matt Carden - Southern Company - Southern Company Services, Inc. - 1

Answer	No
Document Name	

Comment

Southern Company seeks further clarification on the proposed requirement focused on physical proximity as outlined in the criteria 2.1.1, 2.1.2, and 2.1.3. While we understand the intent behind these criteria is to enhance the resilience of the bulk power system against physical threats, we believe

that the current language presents ambiguities that could lead to varied interpretations and implementation challenges across the industry. We respectfully request additional guidance on the following aspects:

Criteria Inclusions (2.1): The requirement should clarify whether the inclusion of all criteria in 2.1.1, 2.1.2, and 2.1.3 must be considered or does it imply that at least one of the criteria in 2.1.1, 2.1.2, and 2.1.3 must be considered.

Definition of Line-of-Sight (2.1.1): The requirement for "line-of-sight between multiple Transmission station or Transmission substation yards from a single site" raises questions about the specific conditions that constitute line-of-sight. For instance, does this criterion consider natural topography, existing infrastructure, or potential future developments that might obstruct the line-of-sight? Clarification on what constitutes an acceptable line-of-sight and any allowable exceptions would be beneficial for compliance planning.

Ease of Access from a Common Public Roadway (2.1.2): This criterion appears to prioritize ease of access from common public roadways but does not specify the degree of access required or how "ease of access" is measured. Different terrains and urban planning constraints could significantly impact the feasibility of this requirement. We suggest defining what constitutes "ease of access" and whether there are acceptable variances depending on geographic or jurisdictional factors.

Proximity and Impact of a Single Event (2.1.3): The requirement that "Transmission station or Transmission substation yards are in close enough proximity that a single event can impact multiple Transmission stations or substations" is particularly concerning due to its broad implications. We request clarification on the types of events considered under this criterion and guidance on how to assess the potential impact radius.

Since the above criteria, even with added specification, presents ambiguities that could lead to varied interpretations and implementations, Southern Company recommends a clear criterion that would include a defined physical radius, such as 100 yards, based on a technically justified single event. This would provide clear guidance that could be consistently adhered to.

Likes 0	
Dislikes 0	

Response

Kevin Conway - Western Power Pool - 4

Answer	No
Document Name	

Comment

: The Drafting Team identified a list of items to be included in the documented criteria, however, the approach is vague and requires TOs to evaluate substations “…in proximity to…[and] irrespective of ownership…” to the identified substations from R1. In practice, how would a TO of one company, especially a smaller company, be able to determine the criteria of another, independent company? “In proximity” is vague at best, overly broad at worst. How would an entity determine what is ‘in proximity”?

In R 2.1.1 the Drafting team uses the term “line-of-site” which is also vague. Line of site from where? The ground? A local elevation? A mountain? Especially in the western half of the United States, where there is a large hill overseeing a broad plain, line of site could extend for over 20 miles, and the complete service territory of a TO.

R 2.1.2 uses “common public roadway” which seems intuitive, but is actually vague. Public roadways consist of many types of construction and can be many miles from a paved surface. They may be the only way to access certain areas, especially through forested or mountainous areas.

Both R2.1.1 and R 2.1.2 are good examples of the problems with the concept the Drafting Team is trying to address, and the difficulty with being audited against language that is overly broad and flexible. Standards language should limit the auditor's ability to use subjective judgement, and provide objective and measurable performance.

Likes 0	
Dislikes 0	

Response

Jennie Wike - Jennie Wike On Behalf of: John Merrell, Tacoma Public Utilities (Tacoma, WA), 1, 4, 5, 6, 3; - Jennie Wike, Group Name Tacoma Power

Answer	No
Document Name	

Comment

Tacoma Power supports the MRO NSRF comments, as follows.

The MRO NSRF recommends including the entity's consideration of physical proximity criteria within R3, as it is part of the risk assessment methodology, rather than a standalone Requirement.

In addition, the criterion in the sub Parts of R2 are insufficiently bounded. For example:

- 2.1.1: On the flat stretches of land which make up much of the middle U.S. and Canada, line of sight can be very long distances, 10 miles or more.

-2.1.2: A common public roadway can stretch thousands of miles [U.S. Route 20 is 3,365 miles long].

-2.1.3: Mentions a single event, without bounding it as a physical attack event

This vagueness will result in too much subjectiveness during audits, and will likely be viewed differently between an entity and auditor, and even between REs. This is already occurring as illustrated in recent presentations from MRO and WECC which offer differing guidance on threat approaches. In the July 26, 2023 MRO CMEP conference, MRO was focused on the "smoking crater" scenario as a Must Have. However, at the recent March 26-27, 2024, WECC Reliability & Security Conference, WECC provided Real-World findings and Lessons Learned that vehicle borne improvised explosive devices are not a likely attack vector and may lead to misallocation of resources on unlikely threats. The threats most entities see are gunfire and copper theft. (These presentations are available on the REs' websites).

An additional challenge with the expansion of R2 to include physically adjacent stations "irrespective of ownership" is which entity is responsible under CIP-014 for protection of stations that are deemed critical and those nearby. Are both entities responsible for implementing physical protections? In the event both substations are determined applicable and a risk assessment performed, what if the separate entities' risk assessments have different conclusions or recommendations?

This also introduces additional complexities in communications between the entities, including the third party risk assessment. The MRO NSRF recommends establishing a timeline by which entities with proximate substations be required to respond to communications from Transmission Owners and the third parties performing risk assessments so there is a level of assurance that the initiating entity can meet all their required timelines.

The MRO NSRF offers additional options to adjust the criteria around physical proximity:

1. Eliminate the currently drafted sub-parts 2.1.1 – 2.1.3, and instead require that each entity establish physical proximity criteria, based on probabilistic threats for likely and realistic scenarios. This could include the requirement to consider attack history on similar facilities by frequency,

proximity, and severity when developing the criteria. This would allow each entity to determine their best definition of physical proximity based on their unique geographic areas and threats.

2. Replace criteria 2.1.1-2.1.3 with a single criterion for physical distance, “Multiple Transmission station or Transmission substation yards located within a distance of no more than 600 feet between station or substation fences.”

3. Develop criteria (e.g. weighting) for small proximate entities so that a threshold must be met to qualify. This would serve to minimize the effort in addressing small (low reliability risk to the BES) facilities.

4. Eliminate the possibility for multiple owners by revising CIP-014 to focus on single entity scenarios.

Likes 0	
Dislikes 0	

Response

Rebika Yitna - Rebika Yitna On Behalf of: Roger Brand, MEAG Power, 3, 1; - Rebika Yitna

Answer	No
Document Name	

Comment

The criteria for ‘proximity’ is subjective and could lead to different conclusions/viewpoints between the Responsible Entity and an auditor. Additional consideration is needed for Transmission station(s) or Transmission substation(s) in proximity to those identified in R1, particularly if those station(s)/substation(s) in proximity are found to be applicable and of differing ownership. This could affect an entity’s ability to properly protect (harden) the station(s)/substation(s) as well as the ability to develop a Physical Security Plan that sufficiently addresses the vulnerabilities and threats.

It is requested that the SDT consider the following:

- How does one entity coordinate with another entity from adjacent station(s)/substation(s) to gather the necessary data of the identified applicable station(s)/substation(s) to properly develop a Physical Security Plan?
- How are different conclusions/recommendations addressed between two entities’ risk based assessment documentation in designating whether an adjacent station(s) or substation(s) is applicable where each entity may have different ‘proximity’ criteria?

Likes 0	
Dislikes 0	

Response

Lidija Efremova - Lidija Efremova On Behalf of: Emma Halilovic, Hydro One Networks, Inc., 1; - Lidija Efremova

Answer	No
Document Name	

Comment

The new R2 as it relates to proximity is vague and does not provide adequate direction to TOs on methodology or how best to evaluate proximity. We understand that all regions have unique challenges and must evaluate on a case by case basis but this is a prime candidate for a revision of the standard to ensure entities are following a prescribed methodology.

{C}1. Is it the expectation that upon an audit the TO will have to show some documentation understanding that all entities will have different forms/levels of evaluating proximity?

{C}2. Should the proximity criteria be applied after the initial run of applicable stations OR this should be done on all transmission stations whereby a completely a new set of stations that can arise.

Example 1 – Risk Assessment (as per normal practice) à use this list to then apply proximity rules to identify

additional stations as a subset

Example 2 – Risk Assessment (as per normal practice), + Proximity Rules applied to ALL stations. (this

would be used to identify two NON applicable stations that when combined meet criteria…)

Likes 0	
Dislikes 0	

Response

Kelley Sargent - Puget Sound Energy, Inc. - 3

Answer	No
Document Name	

Comment

Our understanding is that R2 proximity criteria is seeking station groups with stations that are individually non-applicable under Attachment 1 Table 1, but when combined with other non-applicable stations based on proximity, may meet Attachment 1 applicability criteria. This is based on Attachment 1 Section 2.1, which seeks to combine stations – “that individually are not applicable”. If so, the current language of R2 does not agree with Attachment 1 Section 2.1.
The current requirement does not define clearly of when proximity criteria is applicable.

It will be helpful if the technical rationale document can show diagrams for possible scenarios for combining stations – NA (Non-applicable) & A (Applicable), A & A and NA & NA. R2 proximity criteria applies to the NA & NA set. A non-applicable station in proximity to an applicable station should be exempt from R2.

Likes 0	
Dislikes 0	

Response

Lucinda Bradshaw - Oncor Electric Delivery - 1 - Texas RE	
Answer	No
Document Name	

Comment

Oncor does not agree that the modifications made in CIP-014-4 Requirement R2 to address the issues identified in the SAR because its proposed sub-requirements are ambiguous and fail to create the consistent approach in the identification of infrastructure critical to the operation of the BPS as sought with the SAR. Due to varying geographical locations of facilities and the overall flexibility to document the criteria used to determine proximity, inconsistencies in approaches to perform risk assessments will remain. We recommend that the R2.1 sub requirements be replaced with specific and measurable criteria. For example, the Director of National Intelligence Joint Counterterrorism Assessment Team (JCAT) has published bomb threat standoff distances in which the mandatory evacuation distances for an SUV/VAN explosive threat is 400 feet. Guidelines such as these are used by Physical Security Professionals when performing the evaluation required by CIP-014-3 R6. For consistency, we recommend that a distance between 400 feet to 1000 feet be specified in CIP-014-4 R2.

Additionally, we request clarification of the proposed R2 language concerning voltage classes applicable to stations in proximity. While the proposed R2 language points to R1 stations concerning proximity, and R1 points to Attachment 1, in which lines less than 200 kV are not applicable, it is unclear that the same “less than 200 kV” exclusion applies to those facilities that are in physical proximity to facilities to which R1 is applicable. We request that R2 be clarified to state that only facilities above 200 kV and in proximity to applicable facilities under R1 are to be considered.

Likes 0	
Dislikes 0	

Response

Alison Nickells - NiSource - Northern Indiana Public Service Co. - 1 - RF	
Answer	No
Document Name	

Comment

. ”Line of sight" is not defined clearly. Clarification is needed to determine if it refers to the highest point (i.e., the pole/microwave tower) in the substation yard or does "line of sight" refer to ground level in the substation yard? Additionally, “event” is not clearly scoped.

"Irrespective of ownership" language entangles Responsible Entities. Transmission substations seem to be moving away from the 100kV bright-line NERC criteria in the latest CIP-002-Y draft. Therefore, transmission substations owned by other Transmission Owners will require Registered Entities to evaluate substations that they do not own. This will require entities to dedicate unknown resources to be engaged with the other Responsible Entity(ies) in the 36 month timeframe to conduct the assessments.

Likes 0	
Dislikes 0	

Response

Michele Tondalo - United Illuminating Co. - 1

Answer	No
Document Name	

Comment

Comment 5: In CIP-014-4 R2 and Attachment 1 the terms “Transmission station”, “Transmission substation”, “Transmission facilities”, and “substation yards” are used in similar context. Suggest that the terms used in the standard be reviewed to ensure that any changes in terminology are intentional.

Comment 6: In the context of CIP-014-4 R2 line-of-sight can have significantly different impacts when considering other factors such as time of year (leaves on trees vs. not on trees), urban vs. rural, etc. In an urban setting a station could be a block or two away and not be considered line-of-sight but still be extremely close. Suggest that R2.1 wording be changed to the following: “The criteria shall at a minimum consider the following…” Using the term “consider” would allow for Transmission Owners to document in their rationale how the considerations like line of sight is, or is not used.

Comment 7: In multiple places in the standard the term “…or…” is used, e.g., R2.1.1 “…Transmission station or Transmission substation yards…” Suggest that these instances be reviewed and reworded to include “…and/or…” as appropriate.

Comment 8: Attachment 1 Item 2.1 references the ability to combine stations that are “..individually not applicable…” so that they are included in the CIP-014 assessment with a combined Average Weighted value. However, R2 is identified as for defining how to determine proximity considerations for stations “…in proximity to those identified in Requirement R1…”

Suggest that R2 be reworded as follows:

“…in proximity to those identified in Requirement R1, or through Attachment 1 Criterion 2.1, irrespective of ownership, that shall be included in the risk assessment.”

Likes 0	
Dislikes 0	

Response

Michele Shafer - New York State Electric & Gas (NYSEG) - 6

Answer	No
Document Name	

Comment

- In CIP-014-4 R2 and Attachment 1 the terms “Transmission station”, “Transmission substation”, “Transmission facilities”, and “substation yards” are used in similar context. Suggest that the terms used in the standard be reviewed to ensure that any changes in terminology are intentional.
- In the context of CIP-014-4 R2 line-of-sight can have significantly different impacts when considering other factors such as time of year (leaves on trees vs. not on trees), urban vs. rural, etc. In an urban setting a station could be a block or two away and not be considered line-of-sight but still be extremely close. Suggest that R2.1 wording be changed to the following: “The criteria shall at a minimum **consider** the following…” Using the term “consider” would allow for Transmission Owners to document in their rationale how the considerations like line of sight is, or is not used.
- In multiple places in the standard the term “…or…” is used, e.g., R2.1.1 “…Transmission station or Transmission substation yards…” Suggest that these instances be reviewed and reworded to include “…**and/or**…” as appropriate.
- Attachment 1 Item 2.1 references the ability to combine stations that are “..individually not applicable…” so that they are included in the CIP-014 assessment with a combined Average Weighted value. However, R2 is identified as for defining how to determine proximity considerations for stations “…in proximity to those identified in Requirement R1…”
  Suggest that R2 be reworded as follows:

"…in proximity to those identified in Requirement R1**, or through Attachment 1 Criterion 2.1**, irrespective of ownership, that shall be included in the risk assessment."

Likes 0	
Dislikes 0	

Response

Anna Martinson - MRO - 1,2,3,4,5,6 - MRO, Group Name MRO Group

Answer	No
Document Name	

Comment

The MRO NSRF recommends including the entity's consideration of physical proximity criteria within R3, as it is part of the risk assessment methodology, rather than a standalone Requirement.

In addition, the criterion in the sub Parts of R2 are insufficiently bounded. For example:

- 2.1.1: On the flat stretches of land which make up much of the middle U.S. and Canada, line of sight can be very long distances, 10 miles or more.

- 2.1.2: A common public roadway can stretch thousands of miles [U.S. Route 20 is 3,365 miles long].

- 2.1.3: Mentions a single event, without bounding it as a physical attack event

This vagueness will result in too much subjectiveness during audits, and will likely be viewed differently between an entity and auditor, and even between REs. This is already occurring as illustrated in recent presentations from MRO and WECC which offer differing guidance on threat approaches. In the July 26, 2023 MRO CMEP conference, MRO was focused on the "smoking crater" scenario as a Must Have. However, at the recent March 26-27, 2024, WECC Reliability & Security Conference, WECC provided Real-World findings and Lessons Learned that vehicle borne improvised explosive devices are not a likely attack vector and may lead to misallocation of resources on unlikely threats. The threats most entities see are gunfire and copper theft. (These presentations are available on the REs' websites).

An additional challenge with the expansion of R2 to include physically adjacent stations "irrespective of ownership" is which entity is responsible under CIP-014 for protection of stations that are deemed critical and those nearby. Are both entities responsible for implementing physical protections? In the event both substations are determined applicable and a risk assessment performed, what if the separate entities' risk assessments have different conclusions or recommendations?

This also introduces additional complexities in communications between the entities, including the third party risk assessment. The MRO NSRF recommends establishing a timeline by which entities with proximate substations be required to respond to communications from Transmission Owners and the third parties performing risk assessments so there is a level of assurance that the initiating entity can meet all their required timelines.

The MRO NSRF offers additional options to adjust the criteria around physical proximity:

1. Eliminate the currently drafted sub-parts 2.1.1 – 2.1.3, and instead require that each entity establish physical proximity criteria, based on probabilistic threats for likely and realistic scenarios. This could include the requirement to consider attack history on similar facilities by frequency, proximity, and

severity when developing the criteria. This would allow each entity to determine their best definition of physical proximity based on their unique geographic areas and threats.

2. Replace criteria 2.1.1-2.1.3 with a single criterion for physical distance, “Multiple Transmission station or Transmission substation yards located within a distance of no more than 600 feet between station or substation fences.”

3. Develop criteria (e.g. weighting) for small proximate entities so that a threshold must be met to qualify. This would serve to minimize the effort in addressing small (low reliability risk to the BES) facilities.

4. Eliminate the possibility for multiple owners by revising CIP-014 to focus on single entity scenarios.

Likes 1	Lincoln Electric System, 1, Johnson Josh
Dislikes 0	

Response

Brian Millard - Tennessee Valley Authority - 1,3,5,6 - SERC, Group Name TVA RBB

Answer	No
Document Name	

Comment

TVA disagrees with the changes to R2 given the requirement’s lack of focus on plausible and likely physical attacks, as well as the general lack of flexibility for a Functional Entity to define events based on evidence which may trigger the evaluation of separate facilities in aggregate. Additionally, R2 should require that stations evaluated for proximity be Applicable stations per Attachment 1 and the applicability criteria.

TVA proposes two (2) alternative phrasings of R2, requirement R2.1:

2.1. The criteria shall, at a minimum, include whether the Transmission station or Transmission substation yards are in close enough proximity that a single event can impact multiple Transmission stations or Transmission substations. Determining the proximity of Transmission station or Transmission substation yards that may be impacted by a single event may include:

2.1.1. Line-of-sight between multiple Transmission station or Transmission substation yards from a single site.

2.1.2. Ease of access from a common public roadway that exists between multiple Transmission station or Transmission substation yards.

2.1.3. Historical event analysis or threat assessment.

----- OR -----

2.1. The criteria shall at a minimum include the following:

2.1.1. Line-of-sight between multiple Transmission station or Transmission substation yards from a single site **and**,

2.1.2. Ease of access from a common public roadway that exists between multiple Transmission station or Transmission substation yard **and**,

2.1.3. The Transmission station or Transmission substation yards are in close enough proximity that a single event can impact multiple Transmission stations or Transmission substations **based on analysis of previous events or threat assessment**.

Likes 0	
Dislikes 0	

Response

Alan Kloster - Alan Kloster On Behalf of: Jeremy Harris, Evergy, 3, 5, 1, 6; Kevin Frick, Evergy, 3, 5, 1, 6; Marcus Moor, Evergy, 3, 5, 1, 6; Tiffany Lake, Evergy, 3, 5, 1, 6; - Alan Kloster

Answer	No
Document Name	

Comment

Evergy supports and incorporates by reference the comments of the Edison Electric Insitute (EEI) and MRO NSRF for question #3.

Likes 0	
Dislikes 0	

Response

Leshel Hutchings - AEP - 3

Answer	No
Document Name	

Comment

Remove 2.1 and all sub-bullets.

Line-of-sight, ease of access, and close physical proximity are vague language open for interpretation – makes this difficult to audit and determine compliance. Can the SDT replace 2.1.1-2.1.3 with a distance radius without specifying the type of attack (i.e. 1000 ft of separation between station perimeters?).

We are concerned that a TO may have a methodology and technical rationale based on historical or active threats to their system but that an auditor may have a completely different threat vector in their mind to protect against. The standard language should be such that it is decisively and objectively clear that an entity is in compliance.

Additionally, the intent is to identify close physical proximity such that a singular event could impact both stations; other ranges are irrelevant.

Emphasize explicitly in the standard language or Guidelines and Technical Basis that this considers only a single, simultaneous attack.

Considering non-simultaneous attacks makes the number of scenarios infinite and is not feasible to analyze or protect against. Bringing in proximity factors like “a common public roadway” alludes to non-simultaneous attack and should be removed. SDT may want to consider a closed conversation

with the E-ISAC for an industry-wide perspective from security professionals on the calculated risk of simultaneous BES substation attacks and the most significant threat vectors seen by North American utilities.

Likes 0	
Dislikes 0	

Response

Cain Braveheart - Bonneville Power Administration - 1,3,5,6 - WECC

Answer	No
Document Name	

Comment

BPA believes interpretation of the proximity text is highly subjective, and is confusing because it is not tied to a threat vector. In crossing ownership lines, in failing to explicitly limit ownership to other Registered Entities subject to NERC regulations, and in implying some level of coordination will result, the language seems more suited to one of the transmission planning functions rather than the Transmission Owner function. There is also insufficient detail about which entities will be expected to take actions, and what actions, once one entity deems another entity's site "critical" due to proximity. Are the added sites required to be protected, or can they be studied and ruled out for added security protections? One interpretation suggests that a requirement to circle back and perform multiple studies is being created.

The original intent of CIP-014 was to identify a very small number of the absolutely most critical substations. Requiring Registered Entities to expand their lists using proximity as a criterion in R2 is contrary to the original intent of the standard.

Likes 0	
Dislikes 0	

Response

Karen Demos - NextEra Energy - Florida Power and Light Co. - 3

Answer	No
Document Name	

Comment

NextEra/FPL supports EEI's comments

Likes 0	
Dislikes 0	

Response

Ben Hammer - Western Area Power Administration - 1

Answer	No
Document Name	
Comment	

WAPA recommends including the entity's consideration of physical proximity criteria within R3, as it is part of the risk assessment methodology, rather than a standalone Requirement.

In addition, WAPA concurs with the comments provided by the MRO NSRF. WAPA has significant concerns around the ambiguity and the potential that the number of "groups" of substations now bounded by physical security criteria would lead to a double or triple of sites requiring assessment.

WAPA concurs with additional options provided by the MRO NSRF to adjust the criteria around physical proximity.

Likes 0	
Dislikes 0	
Response	

Michael Dillard - Austin Energy - 5, Group Name Austin Energy

Answer	No
Document Name	
Comment	

Austin Energy supports MRO's comments. Attached in Question 1.

Likes 0	
Dislikes 0	
Response	

Anne Kronshage - Public Utility District No. 1 of Chelan County - 6, Group Name Public Utility District No. 1 of Chelan County - Voting Group

Answer	No
Document Name	
Comment	

Requirement R2.1.1 may cause a significant increase in the number of applicable facilities to include in the risk assessment that may not effectively achieve the intent of the changes as explained in the NERC report entitled, *Evaluation of the Physical Security Reliability Standard and Physical Security Attacks to the Bulk-Power System*. The report focused on the intent of modifying existing Reliability Standards for sake of improving BPS resiliency to physical attacks events such as those that occurred in Moore County, NC in 2022 and identified a lack of consistency. In these events, as well as others referenced in the report, transformers have more frequently been damaged by means of ballistic attack. Use of the term "line-of-sight" will likely require clarification in each TOP's documented criteria and possibly introduce more inconsistency amongst TOP risk assessments. Instead, changing the minimum requirement listed by R2.1.1 to require entities to study the loss of power transformers in applicable stations accomplishes the

goal of assessing the impacts caused by ballistic attacks to the equipment most likely to be victim of these events, while also improving assessment consistency amongst TOPs. *See further comments from the previous item as well.*

Likes 0	
Dislikes 0	

Response

Richard Vendetti - NextEra Energy - 5

Answer	No
Document Name	

Comment

NEE support's EEI comments: "EEI proposes the following modification:

R2. Each Transmission Owner shall establish and implement**apply** documented criteria for identifying Transmission station(s) and Transmission substation(s) in proximity to those identified in Requirement R1, irrespective of ownership, that shall be included in the risk assessment. "

Likes 0	
Dislikes 0	

Response

Donna Wood - Tri-State G and T Association, Inc. - 1

Answer	No
Document Name	

Comment

Tri-State agrees with the MRO NSRF Submitted Comments

Likes 0	
Dislikes 0	

Response

Tim Kelley - Tim Kelley On Behalf of: Charles Norton, Sacramento Municipal Utility District, 3, 6, 4, 1, 5; Foung Mua, Sacramento Municipal Utility District, 3, 6, 4, 1, 5; Kevin Smith, Balancing Authority of Northern California, 1; Nicole Looney, Sacramento Municipal Utility District, 3, 6, 4, 1, 5; Ryder Couch, Sacramento Municipal Utility District, 3, 6, 4, 1, 5; Wei Shao, Sacramento Municipal Utility District, 3, 6, 4, 1, 5; - Tim Kelley, Group Name SMUD and BANC

Answer	No

Document Name	
Comment	

SMUD agrees that proximity criteria are needed in CIP-014-4, however, “proximity” needs to be bound. The proximity criteria should be defined so that all entities can easily determine if the proximity criteria makes a Transmission station or Transmission substation applicable or not. The terms “line of sight”, “ease of access”, and “single event” in sub-requirements R2.1.1, R2.1.2, and R2.1.3, respectively, are all subjective terms and will have different meanings among Transmission Operators. As currently written, CIP-014-4 is not auditable.

The Standard Drafting Team should simplify the proximity criteria by creating a fixed, physical distance that can be measured and easily applied by all Transmission Owners. SMUD suggests a fixed distance of 600 feet, regardless of line of sight, or some other fixed distance that makes sense with physical security experts. A fixed physical distance would also eliminate proximity differences between Transmission Owners.

Likes 0	
Dislikes 0	
Response	
Rachel Schuldt - Black Hills Corporation - 6, Group Name Black Hills Corporation - All Segments	
Answer	No
Document Name	
Comment	

Black Hills Corporation disagrees with the proposed new Requirement R2. Black Hills Corporation recommends that the SAR drafting team clearly define criteria to be used in the CIP-014 studies similar to what was done within Table 1 (footnote 11) of TPL-001-5 for defining the criteria of “common structure” circuits. Black Hills Corporation has concerns about leaving vague language that leaves the requirement open to auditor interpretation.

Likes 0	
Dislikes 0	
Response	
Ellese Murphy - Duke Energy - 1,3,5,6 - Texas RE,SERC,RF	
Answer	No
Document Name	
Comment	

Duke Energy would like to see clarity that the criteria in R2 are tied to likely threat vectors and the protections that can be reasonably implemented. The ambiguity in threat vector makes how to perform the evaluation of the criteria in R2.1 unclear. Duke Energy supports the inclusion of criterion 2.1.1 but proposes that any additional criteria be determined by the entity based by likely threats identified by the entity. As written today, the criteria in R2 and the R3 risk assessment methodology do not clearly align.

Likes 0	

Dislikes 0	
Response	
Sean Bodkin - Dominion - Dominion Resources, Inc. - 6, Group Name Dominion	
Answer	No
Document Name	
Comment	
While Dominion Energy supports EEI comments in general, Dominion Energy does not agree with the modifiactions as Entities are not capable of assessing risk and obtaining the required information to assess any risks for facilities that are not owned by the Entity. For R2.1 this requirement is not feasible, and it incurs unreasonable expenses for a limited reliability benefit. The impact of a facility in line of sight is an extreme contingency and does not add a reliability value based on the cost to study and potentially upgrade a station merely because of proximity. Dominion Energy agrees that R2.1.2 is appropriate to be considered for an identified facility but not in the evaluation of a facility that is high risk to grid reliability. R2.1.3 is an extreme contingency that is unlikely to occur and there is no value in adding this to the identification or study process.	
Likes 0	
Dislikes 0	
Response	
John Pearson - ISO New England, Inc. - 2	
Answer	No
Document Name	
Comment	
Regarding *3.2. "Analysis at System peak, Off-Peak Load, and other System conditions susceptible to instability, uncontrolled separation, or Cascading within an Interconnection shall be conducted in dynamic and steady state simulations."* Please clarify what other conditions are, i.e. further describe case assumptions.	
Likes 0	
Dislikes 0	
Response	
Joshua London - Eversource Energy - 1, Group Name Eversource	
Answer	No
Document Name	

Comment
Eversource believes that this section needs to be re-written such that the only criteria is the physical distance between stations/yards. The reason why this section should be changed is that "line-of-sight" is subjective, changes throughout the year (leaves on trees), and may vary based on elevation changes (using a ladder or drone). "Common public roadway" is undefined and irrelevant since a private roadway or ATV trail is just as relevant. For R1.3, represent "in close enough proximity" as a physical distance.

Likes 0	
Dislikes 0	

Response

Israel Perez - Israel Perez On Behalf of: Laura Somak, Salt River Project, 3, 6, 5, 1; Mathew Weber, Salt River Project, 3, 6, 5, 1; Thomas Johnson, Salt River Project, 3, 6, 5, 1; Timothy Singh, Salt River Project, 3, 6, 5, 1; - Israel Perez

Answer	No
Document Name	

Comment
SRP supports the MRO NSRF with Tacoma Power's comments. In addition, when there are multiple facilities owned by different entities in close proximity to each other that individually would not be in scope, would this requirement make one or more facilities now applicable to CIP-014 if assessed together? How are entities supposed to deal with this scenario? Does an entity have to get with the other entity to make sure their security plan works with each other's plan? What is the expectation for an entity to do we do with other entity's information?

Likes 0	
Dislikes 0	

Response

Teresa Krabe - Lower Colorado River Authority - 5

Answer	No
Document Name	

Comment
This could prove to be challenging and inconsistent. An Entity is required to study facilities owned by other Registered Entities but then what? What if one of the proximity stations is deemed critical from the planning process? Who would be responsible for ensuring that these facilities are adequately protected. What if a facility is low voltage (69kV) and the owner is not registered with NERC; how will this be handled? R2 creates a requirement but does not give any guidance on how to implement.

Likes 0	
Dislikes 0	

Response	
Dave Krueger - SERC Reliability Corporation - 10	
Answer	No
Document Name	
Comment	

Thank you for the chance to comment, SERC appreciates the complexity of the SDT's task of modifying multiple parts of such a high-profile and high-priority standard.

· Item #2.A R2.1.1 includes the term "line-of-sight" as a criteria, which is nebulous and difficult to demonstrate in compliance evidence; providing clear expectations on inclusion is part of the SAR, both in Project Scope #4: "*Clarify what study scenario(s) and other study assumptions are appropriate and reasonable considering the intent of CIP-014-3 and the potential range of issues during a physical attack…"* and SAR Detailed Description #5. One key issue with using line of sight (especially away from a transmission right-of-way is that it changes over time). For example, today a forest of trees obscures a common viewpoint from seeing two substations – but after logging activity or when leaves fall off trees in autumn, now a clear line of sight exists. Another field observed example is where two substations exist near a flat suburban area with dense tree and vegetation cover, but in a few months a low-rise office building offers a new vantage point. Line-of-sight locations usable by an attacker may also not be able to be accurately assessed if the utility does not have legal permission to access privately owned land or structures adjacent to their substation. We would note that the similar term "Clear line of sight" is footnoted in FAC-003-4, however this is not in a security context and applies to Right of Way areas that are generally free of vegetation, as well as disallowing the use of magnified optics. The SDT should consider instead using a specific distance metric that can be readily calculated in a GIS or similar system, is preserved and demonstrable/conclusively measurable as evidence during compliance monitoring, consistent when two or more Responsible Entities own substation Elements in proximity and would allow for reassessment if planned new construction or substation expansion will occur in the 36-month R1 study window. We might suggest the proximity discussion instead look at a 1-kilometer radius from any point, where if any Transmission Element from one substation is within 2 kilometers of another Transmission Element, those would be considered as a proximity group or locus to be studied together. This (or a substitute distance of the SDT's choosing) would represent the maximum probable effective engagement distance of a BES Element-sized target by an attacker.

· Item #2.B R2.1.1 includes the term "line-of-sight" as a criteria. While this phrase did come from NERC's CIP-014-3 R1 Practice Guide as items to question/consider, in a compliance requirement this is likely inadequate to describe the susceptibility of a group of Transmission Elements to a common attack. This may inappropriately simplify attack methods, contrary to what the SAR outlines in Project Scope #4: "*Clarify what study scenario(s) and other study assumptions are appropriate and reasonable considering the intent of CIP-014-3 and the potential range of issues during a physical attack…"* Line-of-sight is largely an issue for direct fire type attacks, but is not a sufficient enough discriminator to cover for other ranges of attack types (such as surreptitious entry or insider threat), or for groups of attackers who are coordinated/mobile during an attack event – as seen in the attacks in Moore County NC in 2022, the Pacific Northwest in 2022, and Idaho in 2023. The use of a proximity based metric (mentioned in Item 2.A above) could alleviate some of these concerns.

· Item #2.C R2.1.3 mentions proximity for a "single event". While the context of a "single event" (happening in a very precise, sub-second timeframe) does make some sense for dynamic studies, a history of physical attacks in Metcalf in 2013, Arkansas in 2013, Moore County NC in 2022, the Pacific Northwest in 2022, and Idaho in 2023 (among others) has shown that actual attacks can consist of multiple attackers/sequential attack actions (see comment Item #2.B above for examples) which may effect the steady state of the BES over a slightly longer timeframe (minutes) vs the dynamic (seconds/cycles). Suggest that the "single event" language be limited to dynamic studies, or eliminated.

· Item #2.D R2.1.3 mentions proximity for a "single event". Is it correct to read that this 'single event' would involve both the loss of communication and system protection in R3.6 as well followed by the introduction of the fault characteristics of R3.3? Or would that be considered multiple "events"?

· Item #2.E R2 states, "irrespective of ownership", so would transmission planners be reliant on access to information (in R1, R2, and R3.6, especially if it involves details of installations in the future as far as 36 months) that may be difficult to get from neighboring entities for purposes of setting up and accurately performing their analysis? If so, the SDT may want to consider adding a requirement that neighboring entities receiving

requests for information related to CIP-014 must comply with providing the necessary information for study purposes, or some remedy for communication requests that are not responded to.

Likes 0	
Dislikes 0	

Response

Jeffrey Streifling - NB Power Corporation - 1

Answer	No
Document Name	

Comment

We are unsure what the Drafting team meant by “proximity to” in R2 and part 2.1.3.

We are unsure what a “common public roadway” is. How is common public roadway different from a public roadway. Additionally, what does “Ease of access” mean for a Common Public roadway?

Likes 0	
Dislikes 0	

Response

Mark Flanary - Midwest Reliability Organization - 10

Answer	No
Document Name	

Comment

As the Requirement is currently written there is no obligation to review the stations or substations identified for risk assessment due to proximity after the initial creation. Consider adding a timing component in R2 such as "at least every 36 months."

The phrase “in proximity to those identified in Requirement R1” is not appropriate as the purpose is to find even substations that are “individually are not applicable, but are applicable when combined based on physical adjacency”. Consider removing from the Requirement "in proximity to those identified in Requirement R1".

While the Requirement takes a step towards addressing proximity by providing Entities flexibility in their criteria it also provides a lot of room for interpretation by Entities, unaffilicated third party verifiers, and oversight. Consider adding to the Technical Rationale guidance or examples regarding what "line-of-sight" and "close enough proximity" mean.

Likes 0	
Dislikes 0	

Response
Chantal Mazza - Chantal Mazza On Behalf of: Junji Yamaguchi, Hydro-Quebec (HQ), 1, 5; Nicolas Turcotte, Hydro-Quebec (HQ), 1, 5; - Chantal Mazza

Answer	No
Document Name	

Comment
We are unsure what the Drafting team meant by “proximity to” in R2 and part 2.1.3. We are unsure what a “common public roadway” is. How is common public roadway different from a public roadway. Additionally, what does “Ease of access” mean for a Common Public roadway?

Likes 0	
Dislikes 0	

Response
Fon Hiew - NB Power Corporation - New Brunswick Power Transmission Corporation - 5

Answer	No
Document Name	

Comment
We are unsure what the Drafting team meant by “proximity to” in R2 and part 2.1.3. We are unsure what a “common public roadway” is. How is common public roadway different from a public roadway. Additionally, what does “Ease of access” mean for a Common Public roadway?

Likes 0	
Dislikes 0	

Response
Andy Fuhrman - Andy Fuhrman On Behalf of: Theresa Allard, Minnkota Power Cooperative Inc., 1; - Andy Fuhrman

Answer	No
Document Name	

Comment

MPC concurs with the MRO NSRF's comments.	
Likes 0	
Dislikes 0	
Response	
Hillary Creurer - Allete - Minnesota Power, Inc. - 1	
Answer	No
Document Name	
Comment	
Minnesota Power supports MRO-NSRF and EEI's comments.	
Likes 0	
Dislikes 0	
Response	
David Jendras Sr - Ameren - Ameren Services - 3	
Answer	No
Document Name	
Comment	
Ameren supports EEI's comments on this project.	
Likes 0	
Dislikes 0	
Response	
Kristine Martz - Edison Electric Institute - NA - Not Applicable - NA - Not Applicable	
Answer	No
Document Name	
Comment	
EEI proposes the following modification:	

R2. Each Transmission Owner shall establish and **apply** documented criteria for identifying Transmission station(s) and Transmission substation(s) in proximity to those identified in Requirement R1, irrespective of ownership, that shall be included in the risk assessment.

Likes 0	
Dislikes 0	

Response

Stephen Stafford - Stephen Stafford On Behalf of: Greg Davis, Georgia Transmission Corporation, 1; - Stephen Stafford

Answer	No
Document Name	

Comment

The concept of the risk assessment in the currently approved standard and this draft is ambiguous and is interpreted differently across the industry. The standard requirements need additional clarification as to what type of risk (explosive, gunshot, etc) the TO should be protecting against. It is important to keep in mind that the clarification on the risk should take into account the premise that physical security measures may be installed pursuant to the assessment of this risk.

Likes 0	
Dislikes 0	

Response

James Baldwin - James Baldwin On Behalf of: Matt Lewis, Lower Colorado River Authority, 5, 1; - James Baldwin

Answer	No
Document Name	

Comment

This could prove to be challenging and inconsistent. An Entity is required to study facilities owned by other Registered Entities but then what? What if one of the proximity stations is deemed critical from the planning process? Who would be responsible for ensuring that these facilities are adequately protected. What if a facility is low voltage (69kV) and the owner is not registered with NERC; how will this be handled? R2 creates a requirement but does not give any guidance on how to implement.

Likes 0	
Dislikes 0	

Response

Denise Sanchez - Denise Sanchez On Behalf of: Diana Torres, Imperial Irrigation District, 1, 6, 5, 3; George Kirschner, Imperial Irrigation District, 1, 6, 5, 3; Jesus Sammy Alcaraz, Imperial Irrigation District, 1, 6, 5, 3; Tino Zaragoza, Imperial Irrigation District, 1, 6, 5, 3; - Denise Sanchez

Answer	No
Document Name	
Comment	

The R2 criteria, as currently written, are open-ended, making consistent evaluation between entities and auditors impossible. Adding an explicit upper bound to limit the scope would enhance clarity and consistency.

IID proposes consolidating criteria 2.1.1 through 2.1.3 into a single criterion based on physical distance, as follows: “Multiple Transmission station or Transmission substation yards located within 600 feet between station or substation fences.”

Expanding the scope to include physically adjacent facilities regardless of ownership is both costly and redundant. It raises the question of whether both entities will share responsibility for physical security protections.

Likes 0	
Dislikes 0	
Response	

Jesus Sammy Alcaraz - Imperial Irrigation District - 1

Answer	No
Document Name	
Comment	

The R2 criteria, as currently written, are open-ended, making consistent evaluation between entities and auditors impossible. Adding an explicit upper bound to limit the scope would enhance clarity and consistency.

IID proposes consolidating criteria 2.1.1 through 2.1.3 into a single criterion based on physical distance, as follows: “Multiple Transmission station or Transmission substation yards located within 600 feet between station or substation fences.”

Likes 0	
Dislikes 0	
Response	

Selene Willis - Edison International - Southern California Edison Company - 5

Answer	No
Document Name	
Comment	

See comments submitted by the Edison Eclectic Institute

Likes 0	

Dislikes 0	
Response	
Ruida Shu - Northeast Power Coordinating Council - 1,2,3,4,5,6,7,8,9,10 - NPCC, Group Name NPCC RSC	
Answer	No
Document Name	
Comment	
We are unsure what the Drafting team meant by “proximity to” in R2 and part 2.1.3. We are unsure what a “common public roadway” is. How is common public roadway different from a public roadway. Additionally, what does “Ease of access” mean for a Common Public roadway?	
Likes 0	
Dislikes 0	
Response	
Dwanique Spiller - Berkshire Hathaway - NV Energy - 5	
Answer	No
Document Name	
Comment	
NV Energy supports the EEI response to this question.	
Likes 0	
Dislikes 0	
Response	
Michael Jang - Seattle City Light - 1	
Answer	No
Document Name	
Comment	
Providing support based on SCL SME's opinion: There are no “clear expectations regarding the inclusion of physically adjacent elements,” as the SAR requests. The adjacency criteria leave a lot of room for interpretation and potential conflicts between adjacent owners. The requirements for determining adjacency should be more explicit and,	

ideally, moved to Attachment 1, since it impacts applicability. The circular references from R2 to R1, R1 to Attachment 1, and Attachment 1 to R2 create room for confusion.

We disagree with the inclusion of “ease of access from a common public roadway that exists between multiple Transmission stations” as a reasonable thing to consider. Driving between stations (that don’t already meet line-of-sight or proximity criteria) would take on the order of minutes, whereas protection systems (even with delayed clearing) and transient stability analyses cover things on the order of seconds or less.

It is also unclear how shared responsibility will work for adjacent stations with different ownership, especially in the case where one substation is significantly smaller than the other.

Likes 0	
Dislikes 0	

Response

Chris Shultz - Seattle City Light - 5

Answer	No
Document Name	

Comment

There are no “clear expectations regarding the inclusion of physically adjacent elements,” as the SAR requests. The adjacency criteria leave a lot of room for interpretation and potential conflicts between adjacent owners. The requirements for determining adjacency should be more explicit and, ideally, moved to Attachment 1, since it impacts applicability. The circular references from R2 to R1, R1 to Attachment 1, and Attachment 1 to R2 create room for confusion.

We disagree with the inclusion of “ease of access from a common public roadway that exists between multiple Transmission stations” as a reasonable thing to consider. Driving between stations (that don’t already meet line-of-sight or proximity criteria) would take on the order of minutes, whereas protection systems (even with delayed clearing) and transient stability analyses cover things on the order of seconds or less.

It is also unclear how shared responsibility will work for adjacent stations with different ownership, especially in the case where one substation is significantly smaller than the other.

Likes 0	
Dislikes 0	

Response

Carver Powers - Utility Services, Inc. - 4

Answer	No
Document Name	

Comment

For requirement 2.1.3, request clarification on what would be considered as a “single event.” Do natural disasters count as a single event (i.e., Hurricane, flood)? The SAR provided an example of what a “single event” could be (e.g., debris field from incendiary device.) Request that this example in the SAR or something similar be included in the modifications.

For section 2.1.2, request clarification on “ease of access”, Does a fence, gate, or a speedbump limit the ease of access concern? Recommend providing guidance in either the standard or technical rationale.

Likes 0	
Dislikes 0	

Response

Stephanie Kenny - Edison International - Southern California Edison Company - 6

Answer	No
Document Name	

Comment

See EEI comments

Likes 0	
Dislikes 0	

Response

Robert Jones - Seattle City Light - 4

Answer	No
Document Name	

Comment

There are no “clear expectations regarding the inclusion of physically adjacent elements,” as the SAR requests. The adjacency criteria leave a lot of room for interpretation and potential conflicts between adjacent owners. The requirements for determining adjacency should be more explicit and, ideally, moved to Attachment 1, since it impacts applicability. The circular references from R2 to R1, R1 to Attachment 1, and Attachment 1 to R2 create room for confusion.

We disagree with the inclusion of “ease of access from a common public roadway that exists between multiple Transmission stations” as a reasonable thing to consider. Driving between stations (that don’t already meet line-of-sight or proximity criteria) would take on the order of minutes, whereas protection systems (even with delayed clearing) and transient stability analyses cover things on the order of seconds or less.

It is also unclear how shared responsibility will work for adjacent stations with different ownership, especially in the case where one substation is significantly smaller than the other.

Likes 0	

Dislikes 0	
Response	
Daren Brubaker - Seattle City Light - 6	
Answer	No
Document Name	
Comment	

There are no “clear expectations regarding the inclusion of physically adjacent elements,” as the SAR requests. The adjacency criteria leave a lot of room for interpretation and potential conflicts between adjacent owners. The requirements for determining adjacency should be more explicit and, ideally, moved to Attachment 1, since it impacts applicability. The circular references from R2 to R1, R1 to Attachment 1, and Attachment 1 to R2 create room for confusion.

We disagree with the inclusion of “ease of access from a common public roadway that exists between multiple Transmission stations” as a reasonable thing to consider. Driving between stations (that don’t already meet line-of-sight or proximity criteria) would take on the order of minutes, whereas protection systems (even with delayed clearing) and transient stability analyses cover things on the order of seconds or less.

Likes 0	
Dislikes 0	
Response	
Gail Elliott - Gail Elliott On Behalf of: Michael Moltane, International Transmission Company Holdings Corporation, 1; - Gail Elliott	
Answer	No
Document Name	
Comment	

Comments: ITC proposes the following modifications:

R2. Each Transmission Owner shall establish and **apply** documented criteria for identifying Transmission station(s) and Transmission substation(s) in proximity to those identified in Requirement R1, that shall be included in the risk assessment.

2.1. The criteria shall include at a minimum one or more of the following: (Convert list to bullets)

-
  - Line-of-sight between multiple Transmission station or Transmission substation yards from a single site.
  - Ease of access from a common public roadway that exists between multiple Transmission station or Transmission substation yards.
  - The Transmission station or Transmission substation yards are in close enough proximity that a single event can impact multiple Transmission stations or Transmission substations
  - Mileage between multiple Transmission station or Transmission substation yards from a single site.

Likes 0	

Dislikes 0	
Response	
Amy Wesselkamper - PNM Resources - Public Service Company of New Mexico - 3	
Answer	No
Document Name	
Comment	

PNM and TNMP support EEI comments regarding R2, noted again here. Additionally, we request the SDT consider removing R2.1.1. Line-of-sight varies significant based on weather conditions, land surfaces, etc. Defining a distance between station would be a better criterion than line-of-sight.

"EEI proposes the following modification:

*R2. Each Transmission Owner shall establish and implement**apply** documented criteria for identifying Transmission station(s) and Transmission substation(s) in proximity to those identified in Requirement R1, irrespective of ownership, that shall be included in the risk assessment."*

Likes 0	
Dislikes 0	
Response	
Zenon O'young-Chu - Seattle City Light - 3	
Answer	No
Document Name	
Comment	

1. There are no "clear expectations regarding the inclusion of physically adjacent elements," as the SAR requests. The adjacency criteria leave a lot of room for interpretation and potential conflicts between adjacent owners. The requirements for determining adjacency should be more explicit and, ideally, moved to Attachment 1, since it impacts applicability. The circular references from R2 to R1, R1 to Attachment 1, and Attachment 1 to R2 create room for confusion.
2. We disagree with the inclusion of "ease of access from a common public roadway that exists between multiple Transmission stations" as a reasonable thing to consider. Driving between stations (that don't already meet line-of-sight or proximity criteria) would take on the order of minutes, whereas protection systems (even with delayed clearing) and transient stability analyses cover things on the order of seconds or less.
3. It is also unclear how shared responsibility will work for adjacent stations with different ownership, especially in the case where one substation is significantly smaller than the other.

Likes 0	
Dislikes 0	
Response	
Jason Snodgrass - Jason Snodgrass On Behalf of: Katrina Lyons, Georgia System Operations Corporation, 3, 4; - Jason Snodgrass	
Answer	No

Document Name	
Comment	
GSOC supports comments provided by Georgia Transmission	
Likes 0	
Dislikes 0	
Response	
Chris Wagner - Santee Cooper - 1, Group Name Santee Cooper	
Answer	No
Document Name	
Comment	
Requirement 2 should be further clarified since it's intent and what was explained in the webinar don't align. Is the proximity requirement in addition to what was identified in Requirement 1 or is it only stations established in Requirement 1?"	
Likes 0	
Dislikes 0	
Response	
Jay Sethi - Manitoba Hydro - 1,3,5,6 - MRO, Group Name Manitoba Hydro Group	
Answer	Yes
Document Name	
Comment	
MH agrees with documenting proximity criteria to identify multiple transmission stations/substations. However, the line-of-sight is subjective to the location and each TO is required to develop its physical proximity criteria based on its unique geographical location and physical threats.	
Likes 0	
Dislikes 0	
Response	
Tyler Schwendiman - ReliabilityFirst - 10	
Answer	Yes
Document Name	

Comment
For R2.2.1.2, the term “ease of access” is not a defined term and may result in difficulty to provide evidence or audit. Suggest using more definitive terms like, “shares access”

Likes 0	
Dislikes 0	

Response

Mark Garza - FirstEnergy - FirstEnergy Corporation - 4, Group Name FE Voter

Answer	Yes
Document Name	

Comment
FirstEnergy has no objection to the modifications made to R2.

Likes 0	
Dislikes 0	

Response

Daniel Gacek - Exelon - 1, Group Name Exelon

Answer	Yes
Document Name	

Comment
Exelon supports the EEI comment to clarify the actions required in R2.

Likes 0	
Dislikes 0	

Response

Steven Rueckert - Western Electricity Coordinating Council - 10, Group Name WECC Entity Monitoring

Answer	Yes
Document Name	

Comment

Requirement R2.1.1 needs to state “one or more” versus “multiple” unless the adjacency only applies to line-of-site inclusion of two or more Transmission station(s) or Transmission substation(s) from the primary applicable Transmission station/substation. Remove the term “yards” as some Transmission Owners have enclosed Transmission station(s) (e.g., rock/brick walls) where a line-of-sight determination could not be made from within the yard. How does this fit for underground Transmission station(s) or Transmission substation(s)? The term “line-of-sight” is open to a great deal of interpretation here. For “clear line of sight” (no hyphens by the way) used in FAC-003 there is a footnote stating ““Clear line of sight” means the distance that can be seen by the average person without special instrumentation (e.g., binoculars, telescope, spyglasses, etc.) on a clear day.” In the case of CIP-014, the Standard is focused on physical security and the potential adversaries identified in the Requirement R4 threat and vulnerability assessment may very well select locations using weapons/tools that have a “line of sight” from the weapon/tool’s perspective (e.g., range finders, laser targeting tools, etc.). Advanced rifle scopes with ballistic calculators enable precise targeting of critical components from distances exceeding 1 kilometer. Night vision and thermal scopes enhance the ability to engage targets in low-light or no-light conditions, facilitating nighttime operations and reducing the likelihood of immediate detection. If more than one Transmission station/substation is within line of sight of the primary applicable Transmission station/substation are all combined as a single loss to study in the risk assessment? This needs to be clear so multiple line-of-sight Transmission station/substation conditions are studied effectively.

Requirement R2.1.2 needs to state “one or more” versus “multiple”. Additionally, what is the intent with regards to distance between Transmission station(s)/substation(s) having “ease of access from a common public roadway”? Certainly, potential adversaries identified in the Requirement R4 threat and vulnerability assessment could damage one Transmission station and drive to other Transmission stations sharing the road but is that within a quarter mile or 50 miles?

Requirement 2.1.3 Remove “yards”. Using “single event” may limit the perspective of the assessment of risk in terms of multiple sites being attacked by a single adversary or group of adversaries not occurring at the same instant. An entity may not consider a series of attacks over a short timeline as a “single” event which would impact the assessment of the risk. Certainly, there is a fine line to draw but use of the term “single” will be leveraged to limit compliance risk while the operational risk is still in effect (with no mitigation efforts initiated.)

Cooperation and coordination between owners with substations in close proximity needs to be emphasized in some manner. Understanding what a neighbor has in the substation and reflecting that in the model is a step to ensure the risk assessment is effective.

Likes 0	
Dislikes 0	
Response	
Robert Follini - Avista - Avista Corporation - 3	
Answer	Yes
Document Name	
Comment	
Likes 0	
Dislikes 0	
Response	
Richard Jackson - U.S. Bureau of Reclamation - 1	
Answer	Yes

Document Name	
Comment	
Likes 0	
Dislikes 0	
Response	
TRACEY JOHNSON - Southern Indiana Gas and Electric Co. - 3,5,6 - RF	
Answer	Yes
Document Name	
Comment	
Likes 0	
Dislikes 0	
Response	
Diana Aguas - CenterPoint Energy Houston Electric, LLC - 1 - Texas RE	
Answer	Yes
Document Name	
Comment	
Likes 0	
Dislikes 0	
Response	
Jennifer Bray - Arizona Electric Power Cooperative, Inc. - 1	
Answer	Yes
Document Name	
Comment	
Likes 0	
Dislikes 0	

Response	
Andrew Smith - APS - Arizona Public Service Co. - 5	
Answer	Yes
Document Name	
Comment	
Likes 0	
Dislikes 0	
Response	
Rachel Coyne - Texas Reliability Entity, Inc. - 10	
Answer	Yes
Document Name	
Comment	
Likes 0	
Dislikes 0	
Response	
Mike Magruder - Avista - Avista Corporation - 1,3,5	
Answer	Yes
Document Name	
Comment	
Likes 0	
Dislikes 0	
Response	
Jodirah Green - ACES Power Marketing - 1,3,4,5,6 - MRO,WECC,Texas RE,SERC,RF, Group Name ACES Collaborators	
Answer	Yes
Document Name	

Comment	
Likes 0	
Dislikes 0	
Response	
Devin Shines - PPL - Louisville Gas and Electric Co. - 1,3,5,6 - SERC,RF	
Answer	
Document Name	
Comment	
LG&E and KU suggest the following with regard to what constitutes sufficient “ease of access from a common public roadway": the Drafting Team should consider the inclusion of a hard threshold for exclusion, akin to TPL-001 1-mile threshold for common structures or right-of-way. For example, “R2.2 Transmission stations or Transmission substations more than 1/2-mile from those identified in Requirement R1 may be excluded in the risk assessment.” In this way, entities may still establish criteria to determine when stations are within sufficient proximity, but they are also given a “brightline" option to use if they prefer. Two stations may be separated by 10 miles of common highway. That would seem to be easy access, but also too far apart for a single attack.	
Likes 0	
Dislikes 0	
Response	

4. Do you agree with the modifications made in CIP-014-4 with new Requirement R3 to address the issues identified in the SAR?

Jodirah Green - ACES Power Marketing - 1,3,4,5,6 - MRO,WECC,Texas RE,SERC,RF, Group Name ACES Collaborators

Answer	No
Document Name	

Comment

ACES feels R3.1 and it's sub requirements are too prescriptive and extend beyond what is listed in the SAR. The main goal of the SAR is to ensure the inclusion of dynamic studies in the risk assessment and increase clarity around criteria to identify instability, uncontrolled separation or Cascading. The additional requirements extend beyond the scope of the SAR.

Likes 0	
Dislikes 0	

Response

Chris Wagner - Santee Cooper - 1, Group Name Santee Cooper

Answer	No
Document Name	

Comment

SAR did not request a 3-phase bolted fault to be evaluated for a stability analysis. The SAR required clarifying to include transient stability analysis at a minimum, but not specifying the exact type of faults to be analyzed. A bolted 3-phase bolt is a very unlikely event that can occur at a station where every transmission line, transformer and other facilities would experience the fault simultaneously. Potential system impact with bolted 3-phase fault would require costly physical security mitigation for a highly unlikely and low probability event. The standard should leave some flexibility as to what type of fault event should be evaluated and include sufficient technical rationale to support it.

The SAR did not require all criteria listed in the R3.1 to be used in the identification of instability. Defining a fixed MW value for generation or load loss should not be required if the assessment does not conclude that it would risk instability, uncontrolled separation or Cascading.

Obtaining actual clearing times places additional burdens on our System Protection engineers and will also increase the complexity and time necessary to develop scripts for simulating these contingencies with minimal benefit. The operating times we currently employ are reasonable estimations generated after consultation with our System Protection group. They are based on our standard protection schemes and are typically more conservative than the actual operating times.

Likes 0	
Dislikes 0	

Response

Steven Rueckert - Western Electricity Coordinating Council - 10, Group Name WECC Entity Monitoring

Answer	No
Document Name	

Comment

There will not be consistency in the development of "acceptable" load/generation loss. Perhaps the RC should determine what that acceptable level is to provide consistency within an RC footprint and/or Interconnection. Appears that there should be a word in front of “post-event response” to clearly indicate the need for technical rational regarding the post-event response. It is not clear how some bulleted items are “used”. Consider consolidating some bulleted items by simply indicating System Operating Limits. The new definition from Project 2015-09 is “All Facility Ratings, System Voltage Limits, and stability limits, applicable to specified System configurations, used in Bulk Electric System operations for monitoring and assessing pre- and post-Contingency operating states.” This would remove 1,3,4,5,6, and 12 (specific examples could be covered in the Technical Rational). “Loss of IBR Generation” needs some context in terms of amount. Unclear what “Cascading line tripping” is in this context of evaluating whether Cascading would occur. Is the DT inferring that the Cascading line tripping being evaluated here is in the “predetermined area” as mentioned in the definition of Cascading?

Requirement R3 simply says “each Transmission station(s) and Transmission substation identified as applicable”. Clarity could be enhanced by stating “…as applicable per Requirements R1 and R4” assuming agreement that Requirement R2 is subsumed by Requirement R1’s use of Attachment 1 (bullet 2.1). All the appropriate Transmission stations and Transmission substations should undergo a risk assessment—simply saying applicable may cause registered entities to inadvertently miss R4 (and possibly R2).

Why would 3.1.2 not be covered in 3.1’s technical rationale?

3.2-Consider using “On-Peak” or “Peak Demand” (defined terms) to describe “System peak” (undefined term). For 3.2.2., consider changing Requirement to say “Applicable Transmission station(s) or Transmission substation(s) that have already been identified as critical to the Interconnection in dynamic or steady state studies do not require any additional studies.” What is the designation or intention associated with” critical" here? Are those Transmission station(s) and Transmission substation(s) that cause instability, Cascading, or uncontrolled separation? Or are part of an IROL? This needs to be clearly delineated within this Standard as the term is used in R5. Consider indicating what is critical in Requirement R5 and reference R5 in 3.2.2—“A Transmission station…..identified as critical using criteria in Requirement R5...”

Format issue with 3.4 and 3.5 which appear to be sub-bullets of 3.3 which, if changed, affects 3.6 references to 3.4 and 3.5.

Should 3.6 say “Protection System” versus “system protection”? Or is the intent “loss of communication for Protection Systems”?

Likes 0	
Dislikes 0	

Response

Jason Snodgrass - Jason Snodgrass On Behalf of: Katrina Lyons, Georgia System Operations Corporation, 3, 4; - Jason Snodgrass

Answer	No
Document Name	

Comment	
GSOC supports comments provided by Georgia Transmission	
Likes 0	
Dislikes 0	
Response	
Zenon O'young-Chu - Seattle City Light - 3	
Answer	No
Document Name	
Comment	
Item 3.1: The requirement is confusingly phrased. "Post-event response" is not a thing of the same type as "amount of acceptable generation loss" and "amount of acceptable load loss", so it is confusing what kind of technical rationale the requirement is asking for. Also, 3.1.2 seems redundant with this requirement. Item 3.3: Items 3.4, 3.5, and 3.6 seem like they should be sub-requirements to 3.3. Item 3.4: Should exceptions be mentioned for the possible case where a 3-phase fault is not the most severe contingency at the station? Item 3.5: As mentioned in my comments on 3, stations being on the same road does not indicate any additional likelihood of simultaneous faults. Even a fraction of a second difference in fault time makes a difference for transient stability.	
Likes 0	
Dislikes 0	
Response	
Amy Wesselkamper - PNM Resources - Public Service Company of New Mexico - 3	
Answer	No
Document Name	
Comment	
PNM and TNMP agree, in part, with EEI comments regarding R3, noted again here. However, aligning with TPL-001 R6 is not acceptable. Entities should define the amount of load and generation loss they will allow for CIP-014 analysis. TPL-001 provides some guidance on load and generation loss in Table 1. *"EEI suggests replacing this requirement and its subparts with language similar to Requirement R6 from TPL-001-5 because the objectives are similar. Additionally, the SAR does not require explicit inclusion of load loss or generation loss limits.*	

o *EEI proposes the following language: "Criteria or methodology used in the analysis to identify System instability for conditions such as Cascading, voltage instability, or uncontrolled islanding."*

o *Some Entities may include explicit thresholds in their Cascading criteria or methodology, but other entities define Cascading as a number of successive element losses. The criteria requirement of TPL-001 is sufficient for evaluating transmission system reliability, and similar language should be used in CIP-014.*

- *R3.1.1 & 3.1.2:*

o *The purpose of CIP-014 is to protect stations where physical attacks may "result in instability, uncontrolled separation, or Cascading within an Interconnection." The items listed under R3.1.1 may or may not be present in such conditions (e.g., the loss of IBR generation does not directly indicate Cascading risk).*

EEI suggests removing 3.1.1, the list of items 3.1.1.1-3.1.1.12, and 3.1.2. This will allow Transmission Owners to define their criteria and methodology. While the list of items provided may add value for consideration, EEI would like to see them moved into the technical rationale for consideration and guidance for Entities during implementation.

Requirement R3, Part 3.2:

- *EEI suggests removing "and other System conditions susceptible to instability, uncontrolled separation, or Cascading with an Interconnection" because it requires entities to study conditions other than peak and off-peak.*

o *Entities may decide to run additional scenarios (e.g., shoulder), but these scenarios should not be included in the requirement language. Additionally, use of the word "any" implies that any System condition that may be susceptible to issues, even if those conditions are sufficiently bounded by the Peak and Off-Peak scenarios are required for analysis, which is overly broad.*

- *R3.2.1: EEI suggests striking "including any tripped facilities from dynamic simulations." Steady-state and dynamic simulations are performed separately and often done by different parties. Some generator tripping in dynamic simulations may not be appropriate for steady-state to evaluate, for example, an IBR that trips in the dynamic simulation may reconnect shortly after the fault clears, even if this reconnection is not represented in stability simulations. However, it would be appropriate to have the generator reconnected in the steady-state simulation. The wording of R3.2.1 is sufficient without this last clause.*

- *EEI also seeks clarity on the use of the phrases "deemed as critical" and "classified as critical" in Requirement R3, Part 3.2.2 and Requirement R5, Parts 5.1 and 5.2. It is not clear that the intended result of the risk assessment performed in Requirement R5 is for the TO to deem Transmission station(s) and Transmission substation(s) as critical or non-critical. EEI suggests the following revision for consideration:*

R3. Each Transmission Owner shall have a documented risk assessment methodology for ***determining if Transmission station(s) and Transmission substation(s) are critical including*** *evaluating the loss of each Transmission station(s) and Transmission substation(s) identified as applicable. The methodology shall include, at a minimum, the following:*

Requirement R3, Part 3.3, 3.4, & 3.5:

- *EEI asks the drafting team to revise Requirement R3, Part 3.3 to allow flexibility for the Transmission Owner to determine appropriate and reasonable study scenarios and study assumptions considering the intent of CIP-014-3 and the potential range of issues during a physical attack. We suggest the following modification to Requirement R3, Part 3.3:* ***"****Analysis of fault simulations determined to be appropriate and reasonable by the Transmission Owner."*

EEI suggests striking 3.4 & 3.5 and allowing the TO to determine the appropriate study scenarios as described in EEI's proposed revision of Requirement R3, Part 3.3 above. EEI is concerned that the scenarios included in 3.4 & 3.5 have not been justified as appropriate and reasonable as required by the SAR. As an example, there is no historical precedence for a physical attack resulting in a bolted 3-phase fault with loss of all

communications as listed in 3.4. Similarly, it is not clear how a physical attack that only impacts one station produces a 3-phase fault, but an event large enough to impact multiple stations produces a single-phase fault. The technical rationale does not include technical justifications for the selection of these scenarios."

Likes 0	
Dislikes 0	

Response

Gail Elliott - Gail Elliott On Behalf of: Michael Moltane, International Transmission Company Holdings Corporation, 1; - Gail Elliott

Answer	No
Document Name	

Comment

ITC supports the EEI response

Likes 0	
Dislikes 0	

Response

Daren Brubaker - Seattle City Light - 6

Answer	No
Document Name	

Comment

Item 3.1: The requirement is confusingly phrased. "Post-event response" is not a thing of the same type as "amount of acceptable generation loss" and "amount of acceptable load loss", so it is confusing what kind of technical rationale the requirement is asking for. Also, 3.1.2 seems redundant with this requirement.

Item 3.3: Items 3.4, 3.5, and 3.6 seem like they should be sub-requirements to 3.3.

Item 3.4: Should exceptions be mentioned for the possible case where a 3-phase fault is not the most severe contingency at the station?

Item 3.5: As mentioned in my comments on 3, stations being on the same road does not indicate any additional likelihood of simultaneous faults. Even a fraction of a second difference in fault time makes a difference for transient stability.

Likes 0	
Dislikes 0	

Response

Robert Jones - Seattle City Light - 4	
Answer	No
Document Name	
Comment	
Item 3.1: The requirement is confusingly phrased. “Post-event response” is not a thing of the same type as “amount of acceptable generation loss” and “amount of acceptable load loss”, so it is confusing what kind of technical rationale the requirement is asking for. Also, 3.1.2 seems redundant with this requirement. Item 3.3: Items 3.4, 3.5, and 3.6 seem like they should be sub-requirements to 3.3. Item 3.4: Should exceptions be mentioned for the possible case where a 3-phase fault is not the most severe contingency at the station? Item 3.5: As mentioned in my comments on 3, stations being on the same road does not indicate any additional likelihood of simultaneous faults. Even a fraction of a second difference in fault time makes a difference for transient stability.	
Likes 0	
Dislikes 0	
Response	
Stephanie Kenny - Edison International - Southern California Edison Company - 6	
Answer	No
Document Name	
Comment	
See EEI comments	
Likes 0	
Dislikes 0	
Response	
Carver Powers - Utility Services, Inc. - 4	
Answer	No
Document Name	
Comment	
Was the intent to have the responsible entity establish their own “acceptable load loss.” In other cases it is up to the BA, RC, or RP to determine a Facility’s acceptable load loss.	

Requirement 3.3 appears to be missing text and subsections. However, the Technical Rational does include details of this section.

Recommend rewording Part 3.6 to provide clarification on “loss of communication and system protection”. Utilizing the NERC defined term of Protection System could limit interpretation of what a loss of system protection entails. We realize that the drating team may intend to include loss of protection system equipment, but not the Protection System as a whole. Rewording to make this clearer could be beneficial.

Suggest modifying Part 3.1.1.7 to say “Loss of synchronous generation” rather than “loss of IBR generation” for inclusion of other generation types.

Likes 0	
Dislikes 0	

Response

Chris Shultz - Seattle City Light - 5

Answer	No
Document Name	

Comment

Item 3.1: The requirement is confusingly phrased. “Post-event response” is not a thing of the same type as “amount of acceptable generation loss” and “amount of acceptable load loss”, so it is confusing what kind of technical rationale the requirement is asking for. Also, 3.1.2 seems redundant with this requirement.

Item 3.3: Items 3.4, 3.5, and 3.6 seem like they should be sub-requirements to 3.3.

Item 3.4: Should exceptions be mentioned for the possible case where a 3-phase fault is not the most severe contingency at the station?

Item 3.5: As mentioned in my comments on 3, stations being on the same road does not indicate any additional likelihood of simultaneous faults. Even a fraction of a second difference in fault time makes a difference for transient stability.

Likes 0	
Dislikes 0	

Response

Michael Jang - Seattle City Light - 1

Answer	No
Document Name	

Comment

Providing support based on SCL SME's opinion:

Item 3.1: The requirement is confusingly phrased. “Post-event response” is not a thing of the same type as “amount of acceptable generation loss” and “amount of acceptable load loss”, so it is confusing what kind of technical rationale the requirement is asking for. Also, 3.1.2 seems redundant with this requirement.

Item 3.3: Items 3.4, 3.5, and 3.6 seem like they should be sub-requirements to 3.3.

Item 3.4: Should exceptions be mentioned for the possible case where a 3-phase fault is not the most severe contingency at the station?

Item 3.5: As mentioned in my comments on 3, stations being on the same road does not indicate any additional likelihood of simultaneous faults. Even a fraction of a second difference in fault time makes a difference for transient stability.

Likes 0	
Dislikes 0	

Response

Dwanique Spiller - Berkshire Hathaway - NV Energy - 5

Answer	No
Document Name	

Comment

NV Energy supports the EEI response to this question.

Likes 0	
Dislikes 0	

Response

Mike Magruder - Avista - Avista Corporation - 1,3,5

Answer	No
Document Name	

Comment

R3 is poorly written but meets the intent of addressing issues identified in the SAR. The requirement as written mixes methodology concepts with criteria for evaluation. Sub-requirement R3.3 does not clearly state how a “fault simulation” is applicable to either dynamic and/or steady state simulations.

Likes 0	
Dislikes 0	

Response

Ruida Shu - Northeast Power Coordinating Council - 1,2,3,4,5,6,7,8,9,10 - NPCC, Group Name NPCC RSC

Answer	No
Document Name	

Comment
We are unsure of what “acceptable loss” means in 3.1. Is this a technical term or defined by the entity on a case-by-case basis. We propose changing “susceptible” to “vulnerable” in Part 3.2. We noticed that 3.3 seems to be missing text and subsections. The Technical Rational had a section on 3.3. In Part 3.6 why is “system protection” used instead of the NERC glossary defined term of “Protection System”? R3.1.1.4 “Relay Loadability” is already factored into R3.1.1.3 “Thermal Loading of Facilities” and should be removed due its duplicative nature. R3.1.1.7 – This should state “Loss of generation” since loss of synchronous generation as well as IBR generation would both cause concerns. R3.3 Appears to be missing and does not line up with the information provided in the technical rationale.

Likes 0	
Dislikes 0	

Response

Selene Willis - Edison International - Southern California Edison Company - 5	
Answer	No
Document Name	

Comment
See comments submitted by the Edison Eclectic Institute

Likes 0	
Dislikes 0	

Response

Jesus Sammy Alcaraz - Imperial Irrigation District - 1	
Answer	No
Document Name	

Comment
IID recommends numbering be fixed for section 3.3. Technical Rationale refers to section 3.3.1, however there is no 3.3.1 in redlines to approved. Furthermore, IID is unsure if R3 is referring to steady state transient or short circuit.

Likes 0	

Dislikes 0	

Response

Denise Sanchez - Denise Sanchez On Behalf of: Diana Torres, Imperial Irrigation District, 1, 6, 5, 3; George Kirschner, Imperial Irrigation District, 1, 6, 5, 3; Jesus Sammy Alcaraz, Imperial Irrigation District, 1, 6, 5, 3; Tino Zaragoza, Imperial Irrigation District, 1, 6, 5, 3; - Denise Sanchez

Answer	No
Document Name	

Comment

IID recommends numbering be fixed for section 3.3. Technical Rationale refers to section 3.3.1, however there is no 3.3.1 in redlines to approved. Furthermore, IID is unsure if R3 is referring to steady state transient or short circuit.

Likes 0	
Dislikes 0	

Response

James Baldwin - James Baldwin On Behalf of: Matt Lewis, Lower Colorado River Authority, 5, 1; - James Baldwin

Answer	No
Document Name	

Comment

The list of study requirements is very prescriptive and severe. Compliance risk rises substantially when a standard becomes overly prescriptive and demanding. That risk is compounded by the increase in the number of stations identified in R1 and R2.

There is a formatting issue with 3.4 and 3.5.

Likes 0	
Dislikes 0	

Response

Stephen Stafford - Stephen Stafford On Behalf of: Greg Davis, Georgia Transmission Corporation, 1; - Stephen Stafford

Answer	No
Document Name	

Comment

- Per the NERC Functional Model, the Transmission Owner (TO) is defined as "the entity that owns and maintains transmission Facilities." R3 is addressing analysis criteria and assumptions that are beyond the purview and capabilities of the TO and is not consistent with the TO

expectations set forth in the referenced NERC Functional model. This includes determining the amount of acceptable load loss, the amount of generation loss, and the evaluation of instability, uncontrolled separation, and Cascading within the Interconnection.

- R3 is misplaced in this CIP standard and should be addressed via a separate project in the TPL space. This project should include SMEs from the planning functions so the appropriate expertise informs potential requirements.
- It is understood that the current version of CIP-014 addresses aspects of the analysis. This construct is problematic as currently written and applied to the TO function.
- Regarding 3.1.1.5: There is no apparent value added by evaluating post-contingency voltage deviation. Steady-state, post-contingency voltage is a problem if the voltage is outside of System Voltage Limits. The post-contingency voltage problem is not dependent on the pre-contingency voltage level nor the deviation from such level.
- Regarding 3.1.1.7 Loss of IBR generation should be changed to “Loss of generation.” The amount of generation loss and its impact on the ability of the BES to remain stable and serve load is the concern and is not specific to IBR.
- R3.3 - R3.6 prescribe the analysis of fault simulations. However, the purpose of the standard is to identify and protect transmission stations and transmission substations (and the BPS) from the results of a physical attack. As such, we need to first understand the types of physical attacks we are simulating. (i.e. What type of physical attack would result in a bolted 3-phase fault at only the highest voltage level bus at one station (and potentially another, simultaneously, in proximity per R2), and what type of attack would result in simultaneous single-phase faults at the highest voltage level buses of stations in the close proximity to each other? What does physical security at a particular station do to mitigate the issue?
- Regarding R3.2.2: GTC recommends insertion the word "current" immediately preceding "dynamic or steady state." A transmission station or Transmission substation that is already identified as critical to the Interconnection in **current** dynamic or steady state studies does not require any additional studies during the assessment.
- Regarding 3.6: The requirement for fault simulations to assume all loss of communication and system protection at the Transmission station or Transmission substation should be based on the type of attack being simulated. What type of attack would result in loss of all communication and system protection at the Transmission station or Transmission substation? What does physical security at a particular station do to mitigate the issue?

Likes 0	
Dislikes 0	

Response

Kristine Martz - Edison Electric Institute - NA - Not Applicable - NA - Not Applicable

Answer	No
Document Name	

Comment

EEI is generally concerned with the addition of prescriptive requirement language that is not wholly supported by the scope of the SAR. It is important to provide flexibility for various approaches to the risk assessment due to expected differences in each registered entity’s facts and circumstances while supporting the intent of CIP-014. EEI proposes the following edits for consideration:

Requirement R3, Part 3.1:

- EEI suggests replacing this requirement and its subparts with language similar to Requirement R6 from TPL-001-5 because the objectives are similar. Additionally, the SAR does not require explicit inclusion of load loss or generation loss limits.

o EEI proposes the following language: “Criteria or methodology used in the analysis to identify System instability for conditions such as Cascading, voltage instability, or uncontrolled islanding.”

o Some Entities may include explicit thresholds in their Cascading criteria or methodology, but other entities define Cascading as a number of successive element losses. The criteria requirement of TPL-001 is sufficient for evaluating transmission system reliability, and similar language should be used in CIP-014.

- R3.1.1 & 3.1.2:

o The purpose of CIP-014 is to protect stations where physical attacks may "result in instability, uncontrolled separation, or Cascading within an Interconnection." The items listed under R3.1.1 may or may not be present in such conditions (e.g., the loss of IBR generation does not directly indicate Cascading risk).

§ EEI suggests removing 3.1.1, the list of items 3.1.1.1-3.1.1.12, and 3.1.2. This will allow Transmission Owners to define their criteria and methodology. While the list of items provided may add value for consideration, EEI would like to see them moved into the technical rationale for consideration and guidance for Entities during implementation.

Requirement R3, Part 3.2:

- EEI suggests removing "and other System conditions susceptible to instability, uncontrolled separation, or Cascading with an Interconnection" because it requires entities to study conditions other than peak and off-peak.

o Entities may decide to run additional scenarios (e.g., shoulder), but these scenarios should not be included in the requirement language. Additionally, use of the word "any" implies that any System condition that may be susceptible to issues, even if those conditions are sufficiently bounded by the Peak and Off-Peak scenarios are required for analysis, which is overly broad.

- R3.2.1: EEI suggests striking "including any tripped facilities from dynamic simulations." Steady-state and dynamic simulations are performed separately and often done by different parties. Some generator tripping in dynamic simulations may not be appropriate for steady-state to evaluate, for example, an IBR that trips in the dynamic simulation may reconnect shortly after the fault clears, even if this reconnection is not represented in stability simulations. However, it would be appropriate to have the generator reconnected in the steady-state simulation. The wording of R3.2.1 is sufficient without this last clause.

- EEI also seeks clarity on the use of the phrases "deemed as critical" and "classified as critical" in Requirement R3, Part 3.2.2 and Requirement R5, Parts 5.1 and 5.2. It is not clear that the intended result of the risk assessment performed in Requirement R5 is for the TO to deem Transmission station(s) and Transmission substation(s) as critical or non-critical. EEI suggests the following revision for consideration:

R3. Each Transmission Owner shall have a documented risk assessment methodology for **determining if Transmission station(s) and Transmission substation(s) are critical including** evaluating the loss of each Transmission station(s) and Transmission substation(s) identified as applicable. The methodology shall include, at a minimum, the following:

Requirement R3, Part 3.3, 3.4, & 3.5:

- EEI asks the drafting team to revise Requirement R3, Part 3.3 to allow flexibility for the Transmission Owner to determine appropriate and reasonable study scenarios and study assumptions considering the intent of CIP-014-3 and the potential range of issues during a physical attack. We suggest the following modification to Requirement R3, Part 3.3: **"**Analysis of fault simulations determined to be appropriate and reasonable by the Transmission Owner."

- EEI suggests striking 3.4 & 3.5 and allowing the TO to determine the appropriate study scenarios as described in EEI's proposed revision of Requirement R3, Part 3.3 above. EEI is concerned that the scenarios included in 3.4 & 3.5 have not been justified as appropriate and reasonable as required by the SAR. As an example, there is no historical precedence for a physical attack resulting in a bolted 3-phase fault with loss of all communications as listed in 3.4. Similarly, it is not clear how a physical attack that only impacts one station produces a 3-phase fault, but an event large enough to impact multiple stations produces a single-phase fault. The technical rationale does not include technical justifications for the selection of these scenarios.

Likes 0	
Dislikes 0	
Response	
David Jendras Sr - Ameren - Ameren Services - 3	
Answer	No
Document Name	
Comment	
Ameren supports EEI's comments on this project.	
Likes 0	
Dislikes 0	
Response	
Hillary Creurer - Allete - Minnesota Power, Inc. - 1	
Answer	No
Document Name	
Comment	
Minnesota Power supports MRO-NSRF and EEI's comments.	
Likes 0	
Dislikes 0	
Response	
Andy Fuhrman - Andy Fuhrman On Behalf of: Theresa Allard, Minnkota Power Cooperative Inc., 1; - Andy Fuhrman	
Answer	No
Document Name	
Comment	
MPC concurs with the comments of ACES and the MRO NSRF.	
Likes 0	
Dislikes 0	

Response	
Fon Hiew - NB Power Corporation - New Brunswick Power Transmission Corporation - 5	
Answer	No
Document Name	
Comment	

We are unsure of what “acceptable loss” means in 3.1. Is this a technical term or defined by the entity on a case-by-case basis.

We propose changing “susceptible” to “vulnerable” in Part 3.2.

We noticed that 3.3 seems to be missing text and subsections. The Technical Rational had a section on 3.3.

In Part 3.6 why is “system protection” used instead of the NERC glossary defined term of “Protection System”?

R3.1.1.4 “Relay Loadability” is already factored into R3.1.1.3 “Thermal Loading of Facilities” and should be removed due its duplicative nature.

R3.1.1.7 – This should state “Loss of generation” since loss of synchronous generation as well as IBR generation would both cause concerns.

R3.3 Appears to be missing and does not line up with the information provided in the technical rationale.

Likes 0	
Dislikes 0	

Response	
Chantal Mazza - Chantal Mazza On Behalf of: Junji Yamaguchi, Hydro-Quebec (HQ), 1, 5; Nicolas Turcotte, Hydro-Quebec (HQ), 1, 5; - Chantal Mazza	
Answer	No
Document Name	
Comment	

We are unsure of what “acceptable loss” means in 3.1. Is this a technical term or defined by the entity on a case-by-case basis.We propose changing “susceptible” to “vulnerable” in Part 3.2.

We noticed that 3.3 seems to be missing text and subsections. The Technical Rational had a section on 3.3.

In Part 3.6 why is “system protection” used instead of the NERC glossary defined term of “Protection System”?

R3.1.1.4 “Relay Loadability” is already factored into R3.1.1.3 “Thermal Loading of Facilities” and should be removed due its duplicative nature.

R3.1.1.7 – This should state “Loss of generation” since loss of synchronous generation as well as IBR generation would both cause concerns.

R3.3 Appears to be missing and does not line up with the information provided in the technical rationale.

Likes 0	
Dislikes 0	
Response	
Mark Flanary - Midwest Reliability Organization - 10	
Answer	No
Document Name	
Comment	

Parts 3.4, 3.5, and 3.6 appear to be sub-parts of 3.3 and should be be labeled 3.3.1, 3.3.2, and 3.3.3, respectively.

R3.1: The phrase "post-event response" in this context reduces clarity of the Requirement. The Requirment should clearly set expectations that the criteria for instability, uncontrolled separation, or Cascading within an Interconnection need to be addressed in the risk assessment methodology. Consider removing the phrase "post-event response" to clarify the objective of the technical rationale.

R3.2: The Requirement as written identifies some System conditions for analysis, but is silent on time horizon which can lead to inconsistencies in model usage. Consider clarifying what model year(s) to use (e.g., one year out; two year out; five year out; etc.) or providing a framework for determining model year(s) to use.

R3.5: The rationale for using “single-phase faults at the highest voltage level buses of each of the Transmission station(s) or Transmission substation(s)” for substations that are identified in accordance with Requirement R2 is assuming the best case scenario and results in a weaker study outcome. Consider combining with R3.4 while making R3.4 more general addressing single or multiple (sub)stations to produce a more robust study.

Likes 0	
Dislikes 0	
Response	
Jeffrey Streifling - NB Power Corporation - 1	
Answer	No
Document Name	
Comment	

We are unsure of what “acceptable loss” means in 3.1. Is this a technical term or defined by the entity on a case-by-case basis.

We propose changing “susceptible” to “vulnerable” in Part 3.2.

We noticed that 3.3 seems to be missing text and subsections. The Technical Rational had a section on 3.3.

In Part 3.6 why is “system protection” used instead of the NERC glossary defined term of “Protection System”?

R3.1.1.4 “Relay Loadability” is already factored into R3.1.1.3 “Thermal Loading of Facilities” and should be removed due its duplicative nature.

R3.1.1.7 – This should state “Loss of generation” since loss of synchronous generation as well as IBR generation would both cause concerns.

R3.3 Appears to be missing and does not line up with the information provided in the technical rationale.

Likes 0	
Dislikes 0	

Response

Dave Krueger - SERC Reliability Corporation - 10

Answer	No
Document Name	

Comment

Thank you for the chance to comment, SERC appreciates the complexity of the SDT’s task of modifying multiple parts of such a high profile and high-priority standard.

Item #3.A R3.1.2 states that the R3 documented risk methodology should contain ‘Technically supported thresholds for acceptable load loss and acceptable generation loss”. Given that no NERC Responsible Entity with applicability to CIP-014-3 comprises the entirety of an Interconnection, the allowance for each individual TO to derive thresholds for what is acceptable at an Interconnection level seems dubious, and likely invites compliance scrutiny. Determining such a threshold may also be beyond the capability of some of the smaller TOs who do not have as wide a view of the planning process. Having consistent implementation of criteria is mentioned in SAR Project Scope Item #3: “*Assure the adequacy and consistent implementation of technically supported justification for study decisions. Clarity should include specificity regarding the documentation, and usage of criteria to identify instability, uncontrolled separation, or Cascading within an Interconnection occur as part of a risk assessment.*” Having this criterion be up to individual interpretation would appear not to fully address that. Suggest instead the use of a common and published criteria, such as NERC’s annual Frequency Response Annual Analysis, to provide a consistent reference point for all entities to utilize, at least by default as a compliance “floor”. If it was desirable to add flexibility to utilize a more conservative reference point (e.g. a lower threshold of lost Generation MWs for a specific ISO), that could be something defined that in that TO’s R3 methodology or a common methodology used by all TO members of an RTO/ISO.

Likes 0	
Dislikes 0	

Response

Teresa Krabe - Lower Colorado River Authority - 5

Answer	No
Document Name	

Comment

The list of study requirements is very prescriptive and severe. Compliance risk rises substantially when a standard becomes overly prescriptive and demanding. That risk is compounded by the increase in the number of stations identified in R1 and R2.

There is a formatting issue with 3.4 and 3.5.

Likes 0	
Dislikes 0	
Response	
Israel Perez - Israel Perez On Behalf of: Laura Somak, Salt River Project, 3, 6, 5, 1; Mathew Weber, Salt River Project, 3, 6, 5, 1; Thomas Johnson, Salt River Project, 3, 6, 5, 1; Timothy Singh, Salt River Project, 3, 6, 5, 1; - Israel Perez	
Answer	No
Document Name	
Comment	
SRP supports the MRO NSRF with Tacoma Power's comments.	
Likes 0	
Dislikes 0	
Response	
Andrew Smith - APS - Arizona Public Service Co. - 5	
Answer	No
Document Name	
Comment	
AZPS agrees with EEI's comments regarding R3.4 & 3.5. The current draft does not provide rationale to support or justify the prescribed fault simulation parameters. For 3.1.1.7., AZPS does not understand the specific inclusion of IBR generation. This bullet should be removed or justified.	
Likes 0	
Dislikes 0	
Response	
Joshua London - Eversource Energy - 1, Group Name Eversource	
Answer	No
Document Name	
Comment	

Eversource believes R3.1.1.4 “Relay Loadability” is already factored into R3.1.1.3 “Thermal Loading of Facilities” and should be removed due its duplicative nature.

R3.1.1.7 – This should state “Loss of generation” since loss of synchronous generation as well as IBR generation would both cause concerns.

R3.3 Appears to be missing and does not line up with the information provided in the technical rationale.

Likes 0	
Dislikes 0	

Response

Sean Bodkin - Dominion - Dominion Resources, Inc. - 6, Group Name Dominion

Answer	No
Document Name	

Comment

Dominion Energy supports EEI comments.

Likes 0	
Dislikes 0	

Response

Ellese Murphy - Duke Energy - 1,3,5,6 - Texas RE,SERC,RF

Answer	No
Document Name	

Comment

Duke Energy does not agree with the risk assessment language proposed in R3 and does not support the proposed fault simulation language. Simulating a bolted 3-phase fault is not a valid study assumption because it simulates a highly implausible scenario. The drafting team has not demonstrated that this scenario can be created with a physical attack which physical protection can mitigate. This simulation implies a “crater” scenario, but the issue is that even a true crater scenario would be unlikely to cause this type of fault as typically simulated by software platforms such as PSSE. Duke Energy also support EEI concerns on the issue of the bolted 3-phase fault.

For 3.1.1. Duke Energy suggests adding parameters at the end of the parent statement to read “Load loss, generation loss, and post-event response within an Interconnection shall be evaluated, using at a minimum the following **parameters**”. We believe that the list under 3.1.1 is not adequately justified and should be revaluated only to include parameters for evaluation that are directly related to instability, uncontrolled separation, or cascading within an interconnection.

Duke Energy has concern that 3.2 is overly broad in reference to “other system conditions susceptible to instability”, given that all conditions are susceptible to instability and this language could require an excess of system conditions to be analyzed. We support EEI comments on this issue.

The numbering/layout of R3 needs to be revised as R3.4 and R3.5 appear to be sub-requirements of R3.3. Correcting this will also impact how R3.6 is written.

Lastly, Duke Energy requests that the drafting team clarify the use of the word “critical” in the revisions. We infer that critical is meant to represent the sites that have already have been identified as sites that require physical protection under previous CIP-014 analysis, but whether or not this is the intended use is not clear in the present draft.

Likes 0	
Dislikes 0	

Response

Rachel Schuldt - Black Hills Corporation - 6, Group Name Black Hills Corporation - All Segments

Answer	No
Document Name	

Comment

Black Hills Corporation agrees with EEI comments that Requirement R3, Part 3.1 be replaced with language similar to Requirement R6 from TPL-001-5 as the objectives are similar, and the sub-requirements of R3.1.1, and R3.1.2 be struck from the requirement. Black Hills Corporation recommends language that would use the same criteria or methodology used in the analysis for System instability conditions within TPL-001-5 studies or studies under FAC-014-3, should be used for CIP-014-3 as it would align with regional requirements or requirements set forth by the Reliability Coordinator.

Black Hills Corporation agrees with remaining EEI comments for the rest of the subsections of Requirement R3.

Likes 0	
Dislikes 0	

Response

Donna Wood - Tri-State G and T Association, Inc. - 1

Answer	No
Document Name	

Comment

Tri-State agrees with the MRO NSRF Submitted Comments

Likes 0	
Dislikes 0	

Response	
Richard Vendetti - NextEra Energy - 5	
Answer	No
Document Name	
Comment	

NEE support's EEI comments: " EEI proposes the following edits for consideration:

Requirement R3, Part 3.1:

{C}- EEI suggests replacing this requirement and its subparts with language similar to Requirement R6 from TPL-001-5 because the objectives are similar. Additionally, the SAR does not require explicit inclusion of load loss or generation loss limits.

{C}o EEI proposes the following language: "Criteria or methodology used in the analysis to identify System instability for conditions such as Cascading, voltage instability, or uncontrolled islanding."

{C}o Some Entities may include explicit thresholds in their Cascading criteria or methodology, but other entities define Cascading as a number of successive element losses. The criteria requirement of TPL-001 is sufficient for evaluating transmission system reliability, and similar language should be used in CIP-014.

{C}- R3.1.1 & 3.1.2:

{C}o The purpose of CIP-014 is to protect stations where physical attacks may "result in instability, uncontrolled separation, or Cascading within an Interconnection." The items listed under R3.1.1 may or may not be present in such conditions (e.g., the loss of IBR generation does not directly indicate Cascading risk).

{C}§ EEI suggests removing 3.1.1, the list of items 3.1.1.1-3.1.1.12, and 3.1.2. This will allow Transmission Owners to define their criteria and methodology. While the list of items provided may add value for consideration, EEI would like to see them moved into the technical rationale for consideration and guidance for Entities during implementation.

Requirement R3, Part 3.2:

{C}- EEI suggests removing "and other System conditions susceptible to instability, uncontrolled separation, or Cascading with an Interconnection" because it requires entities to study conditions other than peak and off-peak.

{C}o Entities may decide to run additional scenarios (e.g., shoulder), but these scenarios should not be included in the requirement language. Additionally, use of the word "any" implies that any System condition that may be susceptible to issues, even if those conditions are sufficiently bounded by the Peak and Off-Peak scenarios are required for analysis, which is overly broad.

{C}- R3.2.1: EEI suggests striking "including any tripped facilities from dynamic simulations." Steady-state and dynamic simulations are performed separately and often done by different parties. Some generator tripping in dynamic simulations may not be appropriate for steady-state to evaluate, for example, an IBR that trips in the dynamic simulation may reconnect shortly after the fault clears, even if this reconnection is not represented in stability simulations. However, it would be appropriate to have the generator reconnected in the steady-state simulation. The wording of R3.2.1 is sufficient without this last clause.

{C}- EEI also seeks clarity on the use of the phrases “deemed as critical” and “classified as critical” in Requirement R3, Part 3.2.2 and Requirement R5, Parts 5.1 and 5.2. It is not clear that the intended result of the risk assessment performed in Requirement R5 is for the TO to deem Transmission station(s) and Transmission substation(s) as critical or non-critical. EEI suggests the following revision for consideration:

R3. Each Transmission Owner shall have a documented risk assessment methodology for **determining if Transmission station(s) and Transmission substation(s) are critical including** evaluating the loss of each Transmission station(s) and Transmission substation(s) identified as applicable. The methodology shall include, at a minimum, the following:

Requirement R3, Part 3.3, 3.4, & 3.5:

{C}- EEI asks the drafting team to revise Requirement R3, Part 3.3 to allow flexibility for the Transmission Owner to determine appropriate and reasonable study scenarios and study assumptions considering the intent of CIP-014-3 and the potential range of issues during a physical attack. We suggest the following modification to Requirement R3, Part 3.3: **“**Analysis of fault simulations determined to be appropriate and reasonable by the Transmission Owner.”

{C}- EEI suggests striking 3.4 & 3.5 and allowing the TO to determine the appropriate study scenarios as described in EEI’s proposed revision of Requirement R3, Part 3.3 above. EEI is concerned that the scenarios included in 3.4 & 3.5 have not been justified as appropriate and reasonable as required by the SAR. As an example, there is no historical precedence for a physical attack resulting in a bolted 3-phase fault with loss of all communications as listed in 3.4. Similarly, it is not clear how a physical attack that only impacts one station produces a 3-phase fault, but an event large enough to impact multiple stations produces a single-phase fault. The technical rationale does not include technical justifications for the selection of these scenarios. “

Likes 0	
Dislikes 0	

Response

Jennifer Bray - Arizona Electric Power Cooperative, Inc. - 1

Answer	No
Document Name	

Comment

AEPC signed on to ACES comments below:

ACES feels R3.1 and it’s sub requirements are too prescriptive and extend beyond what is listed in the SAR. The main goal of the SAR is to ensure the inclusion of dynamic studies in the risk assessment and increase clarity around criteria to identify instability, uncontrolled separation or Cascading. The additional requirements extend beyond the scope of the SAR.

Likes 0	
Dislikes 0	

Response

Diana Aguas - CenterPoint Energy Houston Electric, LLC - 1 - Texas RE

Answer	No

Document Name	
Comment	

CenterPoint Energy Houston Electric, LLC (CEHE) recommends removing risk assessment methodology part R3.1.1.1. thru R3.1.1.12 as they are not necessary and too prescriptive. Transmission Owners should establish the methodology and what is to be evaluated. Therefore, these details do not need to be included as part of the CIP-014-4 Standard.

CEHE is capable of providing the study details associated with Requirement 3.6; however, this is adding additional compliance burden on Entities, similar to the challenges identified in TPL-001-5. The study would only be required every 36-calendar months, but Entities do not have a method of automating that process. It would be a manual study review for every substation identified, which would be incredibly intrusive and burdensome.

Likes 0	
Dislikes 0	
Response	
Michael Dillard - Austin Energy - 5, Group Name Austin Energy	
Answer	No
Document Name	
Comment	

Austin Energy supports MRO's comments. Attached in Question 1.

Likes 0	
Dislikes 0	
Response	
TRACEY JOHNSON - Southern Indiana Gas and Electric Co. - 3,5,6 - RF	
Answer	No
Document Name	
Comment	

Southern Indiana Gas and Electric d/b/a CenterPoint Energy Indiana South (SIGE) agrees with removing risk assessment methodology part R3.1.1.1. thru R3.1.1.12 as they are not necessary and too prescriptive. Transmission Owners should establish the methodology and what is to be evaluated. Therefore, these details do not need to be included as part of the CIP-014-4 Standard.

Likes 0	
Dislikes 0	
Response	

Ben Hammer - Western Area Power Administration - 1	
Answer	No
Document Name	
Comment	
WAPA concurs with the comments provided by the MRO NSRF. In addition, WAPA also offers that Requirement 3.2 uses the terminology, “and other System conditions…” which creates a situation where an entity may have to “prove the negative” if an auditor feels that “other System conditions” studied by the entity are not sufficient, even if the prescriptive studies mentioned in 3.2 were performed. Recommend stating what is the minimum requirement and avoid the catch-all, ambiguous phrasing. Requirement R3.4 and R3.5. It is possible that a fault on a lower voltage level bus at a substation is more severe than the highest voltage level bus, so this is an odd way to make this an explicit requirement. For R3.6, recommend the use of generic, conservative clearing times (or slowest possible), vice actual clearing times which would alleviate a burden for entities with large number of substations to evaluate while still meeting the objective. With R3.3 stating “as follows,” R3.4, 3.5, etc should be sub-requirements under R3.3	
Likes 0	
Dislikes 0	
Response	
Karen Demos - NextEra Energy - Florida Power and Light Co. - 3	
Answer	No
Document Name	
Comment	
NextEra/FPL supports EEI's comments	
Likes 0	
Dislikes 0	
Response	
Cain Braveheart - Bonneville Power Administration - 1,3,5,6 - WECC	
Answer	No
Document Name	
Comment	

Sub-Requirement 3.6 assumes loss of communication and system protection regardless if the analysis assumes removal of a singular Transmission station or Transmission substation (R3.4), or if the analysis assumes removal of more than one Transmission station or Transmission substation (R3.5). BPA believes a reasonable threat removing a single substation could be severe enough to remove an entire substation and include loss of communication and protection systems, whereas a threat to more than one substation at the same time would more reasonably be targeted at high voltage equipment and not necessarily result in loss of communications or relaying. BPA recommends that Requirement 3.6 only apply to a singular substation analyzed in Requirement 3.4.

BPA recommends sub-requirements 3.4, 3.5, and 3.6 be re-numbered to 3.3.1, 3.3.2, and 3.3.3.

Likes 0	
Dislikes 0	

Response

Leshel Hutchings - AEP - 3

Answer	No
Document Name	

Comment

Comments: **R3 Section 3.1:**

Reword "*Technical rationale for determining the amount of acceptable load loss, the amount of acceptable generation loss, and post-event response resulting in instability, uncontrolled separation, or Cascading within an Interconnection.*"

To proposed language: "*Technical rationale for determining instability, uncontrolled separation, or Cascading with a critical impact to the operation of an Interconnection.*"

This simplifies confusing language. Move the specific language around "amount of acceptable load loss and the amount of acceptable generation loss" to the 3.1.1 criteria. Add "critical impact to the operation of the Interconnection" language directly from the FERC clarification of the March 7 Order to make explicit the purpose of the risk assessment.

R3 Section 3.1.1:

Suggest removing all of the sub bullets under 3.1.1.

3.1.1 is too prescriptive and the list appears to be a random selection of factors that may or may not influence instability, uncontrolled separation, or Cascading. They would not in themselves generally be taken as constituting measures of instability, uncontrolled separation, or Cascading. Instability, uncontrolled separation, or Cascading already define the three factors to consider. The Standard is not designed nor intended to prescribe the methodology for entities. We support R3 requiring TOs to have a documented risk assessment methodology.

The technical rationale for Part 3.1.1 states that "a TO can decide that one or more of the items are not applicable to their location within the interconnection", but if the items are written explicitly in the standard, particularly with language stating "at a minimum", there will be no flexibility given around considering them all.

3.1.1 and 3.1.2 are duplicative. One should be removed – suggest consolidating to "*Technically supported thresholds for acceptable load loss and generation loss".*

Alternatively, they could be split into two separate bullets: *"3.1.1: load loss, 3.1.2: generation loss".* "Post-event response" does not add clarity and instability, uncontrolled separation, or Cascading covers this.

R3 Section 3.2:

Propose rewording "Analysis at System Peak, Off-Peak Load, and other System conditions,"

To proposed: "Analysis at System Peak, Off-Peak Load, or other System conditions," or completely removing this section, otherwise this will triple the number of scenarios/cases for entities.

This will triple the number of scenarios. Additionally, "other System conditions" is left undefined.

One of the reasons for changing the compliance timeframe to 36 months was to be consistent with the case building process. Some RTOs like ERCOT provide limited dynamic cases, so this language means it would not be possible to use the RTO cases unless each TO modifies cases to meet the requirements especially "other system conditions susceptible to instability".

Some entities previously considered sensitivities based on differing future years with projects in or out of service and received positive observations in audits for this approach. The language in the current draft unfortunately would eliminate the potential for that interpretation.

R3 Section 3.2.1:

The placement of 3.2.1 does not make sense here under 3.2. Suggest making its own bullet 3.7.

3.2.1 will lead to significant nonconvergence issues in steady state if applied in the contingency or even if a base case is created with these outages because the appropriate timing delay cannot be reflected. If outages are applied individually and manually post-contingency this will be a significant increase in the burden of the steady state analysis.

R3 Section 3.2.2:

The placement of 3.2.2 does not make sense here under 3.2. Suggest making its own bullet 3.8. Duplicative with 5.1 – suggest removing 5.1 or at least one of them.

R3 Section 3.3:

Sections 3.4, 3.5, and 3.6 should be sub-bullets to section 3.3, and therefore renumbered to 3.3.1, 3.3.2, and 3.3.3 (3.6.1 would become 3.3.3.1).

Consolidate 3.4 and 3.5 propose 3 phase bolted faults for all events as worst case "smoking crater" scenario.

This reduces complexity of considering different events for one applicable station outages or multiple proximate station outages.

R3 Section 3.6.2 :

Remove 3.6.2.

What value does having this bullet explicitly in the standard add? It will add significant additional compliance burden for evidence to mitigate minor risk and minor result impact.

It should be noted that the risk assessment is performed on future planning cases, and many factors could impact the actual clearing times prior to the dates that the cases represent. Some facilities in the risk assessment will be future/planned stations and without actual clearing times available.

Likes 0	

Dislikes 0	

Response

Alan Kloster - Alan Kloster On Behalf of: Jeremy Harris, Evergy, 3, 5, 1, 6; Kevin Frick, Evergy, 3, 5, 1, 6; Marcus Moor, Evergy, 3, 5, 1, 6; Tiffany Lake, Evergy, 3, 5, 1, 6; - Alan Kloster

Answer	No
Document Name	

Comment
Evergy supports and incorporates by reference the comments of the Edison Electric Insitute (EEI) and MRO NSRF for question #4.

Likes 0	
Dislikes 0	

Response

Brian Millard - Tennessee Valley Authority - 1,3,5,6 - SERC, Group Name TVA RBB

Answer	No
Document Name	

Comment
TVA does not agree with the modifications made in CIP-014-4 with the new Requirement R3. Regarding R3.4, only one threat level is specified when there are no additional substations included due to proximity. “If the Transmission station(s) or Transmission substation(s) identified in accordance with Requirement R1 is a singular Transmission station or Transmission substation, then fault simulations shall include a bolted 3-phase fault at the highest voltage level bus.” If only one threat level is suggested to be studied for these events, then it removes the need for an independent verifier. If the event specificity remains, TVA suggests removing the independent verifier requirement. However, the study parameters of only one threat level for these events is unreasonable and not technically supported by any physical attack risk study that includes the probability of such an attack. If such a study were performed, TVA is confident that a study of one threat level would be shown to be unrealistic. The proposed event is generally considered to be even more severe than a “smoking hole” event. The consequence of having such an unreasonable and overly conservative threat level is the potential for a significant number of additional substations being identified as critical. Protective DCB relaying would not be able to mitigate this type of event as it is written. Since this type of threat cannot typically be mitigated by grid enhancements, a huge expense would be directed to building fences instead of potential improvements to grid reliability. The resulting fences or walls around multiple substations would only draw more attention to those who wish to attack the system. There are ways to still attack the substations, even with the fences, and the result would be a situation with less grid security coupled with a huge unproductive expense. TVA proposes an approach to consider historical events: The first step of the methodology would be to do a thorough study of all historical events to identify a series of unique threat vectors. A potential list of identified threat vectors based on historical events might look like:

1) Large transformer banks under gunfire from gunman, firing 100 to 150 rounds of rifle ammunition

2) Total loss of communication prior to event

3) Attacks cut the underground telecommunication fiber optic cables but did not fully disrupt the telemetry between the PG&E substation and the control center.

4) No faults caused by the attack.

4b) Single phase faults caused by the attack.

5) Were fires in the control building or elsewhere in the switchyard? (Y/N)

6) Was power lost in the switchyard? (Y/N)

The second step of the methodology would be to define events to study. Each event would combine several different threat vectors, but NOT at the same time (unless historically verified to happen).

Two Examples of realistic events to study (events that are worse than all historical events, but are not the combination of all possible threats):

1) Study the loss of all power at the substation combined with the loss of all communications at the substation combined with a single phase to ground fault at the highest voltage level (or at all voltage levels). No local breakers operate so that the single phase-phase fault must be cleared remotely from each of the remote substations.

2) Study a 3-phase fault event with the loss of all power at the substation but with communications at the substation still functioning. No local breakers operate so that the 3-phase fault must be cleared remotely from each of the remote substations.

If the CIP-014 methodology included the study of event scenarios like these, then all the attack vectors could be included in the study in a reasonable way. The study events could be designed to be worse than any single historical physical attack scenario that has ever occurred. An overly conservative methodology (that is not based on realistic probabilities) would be a significant time burden to the industry. Expense and grid security potentially would be even worse as a result.

Regarding 3.2.1, adding tripped generators and other tripped facilities from the dynamic stability study to the steady-state contingency definition would create overly conservative results and be excessively burdensome. Often stability studies need to be rerun during the checking process. Any reruns may cause the steady state studies to also be redone. Historically, both studies have been done in parallel and not sequentially. Steady-state studies typically assume constant power loads where power does not vary with changes in voltage magnitude. This is a valid assumption for steady state studies but in reality, loads do not behave this way and differs greatly from how loads are represented in dynamic studies.

From a dynamic studies perspective, the composite load model (CMLD) has seen increased adoption among utilities and more accurately reflects the aggregate behavior of motors. The model includes parameters which dictate fractions of the motor load components that do not restart, even if voltage recovers above the undervoltage trip thresholds. There is currently no industry consensus on whether this fraction of non-restartable motor loss is consequential or non-consequential load loss. TVA’s position is that this is consequential load loss, as it’s impossible to prevent, would occur for normally cleared faults due to typical undervoltage time delays of 2-3 cycles. Consequential load loss is commonly excluded from steady-state load loss criteria.

To be consistent, there are aspects of the dynamics studies that would also need to be included in the steady state studies to properly align the studies that cannot be readily captured or communicated, such as the amount of load that trips offline (consequentially by the load model). These are quantities that are internal to the simulation that are often unavailable using the apps supplied by PSSE. The complexity of the resulting combined study would be very burdensome and impractical to manage. Therefore, including tripped generators and other tripped facilities from the stability study into the steady-state study could only make sense if loads were also reduced by the fraction of loss. This would be a time burden to the industry as there is currently no practical way to achieve this with the tools available to Transmission Planners. TVA suggest to remove the “including any tripped facilities from dynamic simulations” language.

Likes 0	

Dislikes 0	

Response

Anna Martinson - MRO - 1,2,3,4,5,6 - MRO, Group Name MRO Group

Answer	No
Document Name	

Comment

The subparts of R3.1 are very prescriptive and go significantly beyond the requirements listed in the SAR. One of the primary goals of the SAR was to ensure the inclusion of dynamic studies in the risk assessment and increase clarity around criteria to identify instability, uncontrolled separation or Cascading. The draft goes significantly beyond this, requiring prescriptive technical considerations using criteria not mentioned anywhere in the SAR.

In addition, the drafted R3.6 requires the loss of communication and system protection and the station(s) or substation(s) being studied. Entities have multiple means of communications between relays to clear faults, including powerline carrier, microwave and fiber. Faults are typically cleared in 3-5 cycles (.05-.083 seconds). Gunfire cannot cause this complete outage of all communications before the relays can save the system. For the Metcalf attack many years ago that prompted CIP-014, an attacker entered a communications vault outside the substation and cut communications cables. It is very unlikely an attacker can cut the redundant communication circuits used by relays to communicate between substations or within a substation. The SAR only asks for clarification around the use of delayed clearing in study assumptions, and does not mandate its inclusion as its own sub-requirement.

The MRO NSRF recommends that R3 eliminate the prescriptive sub-parts in 3.1, instead requiring the entity to document its criteria, parameters, and study decisions or assumptions in a study methodology, which must include dynamic and steady-state studies. R3 should also include the consideration of physical proximity criteria within the entity's methodology as outlined in Q4. In addition, the MRO NSRF recommends the removal of R3.6. R3 should include only the minimum specifications listed in the SAR.

Finally, the MRO NSRF recommends that entities design their CIP-014 risk assessment methodology with the focus on realistic and likely threat scenarios.

Administratively, given the colon at the end of R3.3, R3.4 thru 3.6 should be numbered 3.3.1 thru 3.3.3. And then, 3.6.1 should be 3.3.3.1 and 3.6.2 be 3.3.3.2.

Likes 1	Lincoln Electric System, 1, Johnson Josh
Dislikes 0	

Response

Michele Shafer - New York State Electric & Gas (NYSEG) - 6

Answer	No
Document Name	

Comment

- R3 should specify what applicable stations that should be covered in the methodology. Suggest that CIP-014-4 R3 be worded to state: "…loss of each Transmission station(s) **and/**or Transmission substation(s) identified as applicable **in the list established in R1, the criteria developed in R2, and/or the individual or joint responsibilities identified in R4**."
- The wording in R3.1 states that the "…methodology shall include, at a minimum, the following:" which supposes that each area has limits for all of the items listed in R3.1, R3.1.1, and R3.1.2. For example, if an area does not have a limit for loss of load they could be found as non-

compliant. Suggest that this be worded to state:
"…methodology shall **consider**, at a minimum, the following. If one of the following criteria is not utilized in the methodology a technical rationale must be documented."

- In R3.1 I suggest that the wording in the second line be updated to the following "…and **acceptable** post-event **system** response **that results in** instability, uncontrolled separation or Cascading…" to identify what response is being evaluated, and that the intent of the evaluation is to determine an acceptable level of performance.

- In R3.1.1 the use of the phrase "…shall be evaluated…" will compel an entity to evaluate each of the listed items, even though it may not be something that is limiting in that area. Suggest that this section be reworded:
"3.1.1. Load loss, generation loss, and post-event **system** response within an Interconnection shall **be considered and documented technical rationale, for** at a minimum the following:"
- In R3.1.2 the phrase "Technically supported…" can be read in different ways. Suggest rewording:
"**Thresholds for** acceptable load loss and acceptable generation loss **with documented technical rationale**."
- When discussing generator and load loss does the standard allow for entities to define limits as gross OR net loss as they see fit? R3.1.2 lists them separately and it is not clear if they can be assessed simultaneously, if desired.

- The use of the language "…and other System conditions…" could compel an entity to create additional scenarios on top of peak and off-peak that may not be impactful in order to comply with the standard. Suggest this be reworded to the following:
"…Off-Peak Load, and other **optional** System Conditions…"
- R3.2.1 states that "Steady state analysis shall include the removal of all elements that Protection Systems…are expected to automatically disconnect…" but no such specificity is included for dynamic studies that are briefly mentioned at the end of R3.2.1. The TPL-001-5 standard does include such specificity in its R3.3.1 (steady state) and R4.3.1 (dynamics).

- The TPL-001 standard uses the term "stability" whereas the updated CIP-014 uses the term "dynamic"; is there an intended differentiation?
- Is R3.2.2 intended to allow for a station to never be retested in future assessments if it has ever been identified as critical in a previous CIP-014 assessment, or is this requirement intended to permit an entity to not perform both analyses (steady-state and dynamic) if a station is found to be critical in one analysis in the current assessment? Having an entity operating under the assumption that once a station is critical it will always be critical could lead to inefficient response during an event.
- Should R3.4, R3.5, and R3.6 be moved under R3.3 as R3.3.1, R3.3.2, and R3.3.4? In addition, in the existing R3.4 the phrasing is not clear and can potentially be misinterpreted to read that if there was a single substation identified on the R1 list that the testing should be done with a 3LG fault. Suggest that it be reworded:
"**Fault simulations on** Transmission station(s) or Transmission substation(s) identified in accordance with Requirement R1 **that do not include additional proximal facilities** shall include a bolted 3-phase fault at the highest voltage level bus."
- In R3.5 the standard uses the term "If…" when referencing stations identified in R2; but I believe that the intent of R2 is to create groups of proximal stations, so there will always be 2 stations included under the analysis in R3.5 so "If" should be removed.

- R1 refers to creating a list of stations using Attachment 1 of which Criterion 2.1 can identify multiple facilities. However, R3.4, references singular stations and R3.5 refers to the stations added through R2. When read together it is not clear the fault type that should be utilized when testing stations that are identified in Attachment 1 Criterion 2.1. I believe that the testing should include testing of proximal stations individually if they are meeting applicability, and then another simulation that includes testing simultaneous loss of the applicable station and proximal sites.
- In R3.6 the term "…system protection…" is used and not "…protection systems…" as is written in R3.2.1. Is the wording change between R3.2.1 and R3.6 intentional? If so, what is the difference intended to communicate?
- In R3.6.1 the use of the wording "Delayed (remote)…" is not clear. This could be interpreted identify remote clearing that is further delayed by some phenomena, or to only allow for testing through delayed elements and not an overreaching low time delay pilot scheme like a blocking scheme. Suggest that the wording be changed so that it requires entities to assess it based on the clearing times that would be in effect if all protection system at the station(s) under test were disabled.

Likes 0	
Dislikes 0	

Response

Michele Tondalo - United Illuminating Co. - 1	
Answer	No
Document Name	
Comment	

Comment 9: R3 should specify what applicable stations that should be covered in the methodology. Suggest that CIP-014-4 R3 be worded to state:

"…loss of each Transmission station(s) and/or Transmission substation(s) identified as applicable in the list established in R1, the criteria developed in R2, and/or the individual or joint responsibilities identified in R4."

Comment 10: The wording in R3.1 states that the "…methodology shall include, at a minimum, the following:" which supposes that each area has limits for all of the items listed in R3.1, R3.1.1, and R3.1.2. For example, if an area does not have a limit for loss of load they could be found as non-compliant. Suggest that this be worded to state:

"…methodology shall consider, at a minimum, the following. If one of the following criteria is not utilized in the methodology a technical rationale must be documented."

Comment 11: In R3.1 I suggest that the wording in the second line be updated to the following "…and acceptable post-event system response that results in instability, uncontrolled separation or Cascading…" to identify what response is being evaluated, and that the intent of the evaluation is to determine an acceptable level of performance.

Comment 12: In R3.1.1 the use of the phrase "…shall be evaluated…" will compel an entity to evaluate each of the listed items, even though it may not be something that is limiting in that area. Suggest that this section be reworded:

"3.1.1. Load loss, generation loss, and post-event system response within an Interconnection shall be considered and documented technical rationale, for at a minimum the following:"

Comment 13: In R3.1.2 the phrase "Technically supported…" can be read in different ways. Suggest rewording:

"Thresholds for acceptable load loss and acceptable generation loss with documented technical rationale."

Comment 14: When discussing generator and load loss does the standard allow for entities to define limits as gross OR net loss as they see fit? R3.1.2 lists them separately and it is not clear if they can be assessed simultaneously, if desired.

Comment 15: The use of the language "…and other System conditions…" could compel an entity to create additional scenarios on top of peak and off-peak that may not be impactful in order to comply with the standard. Suggest this be reworded to the following:

"…Off-Peak Load, and other optional System Conditions…"

Comment 16: R3.2.1 states that "Steady state analysis shall include the removal of all elements that Protection Systems…are expected to automatically disconnect…" but no such specificity is included for dynamic studies that are briefly mentioned at the end of R3.2.1. The TPL-001-5 standard does include such specificity in its R3.3.1 (steady state) and R4.3.1 (dynamics).

Comment 17: The TPL-001 standard uses the term "stability" whereas the updated CIP-014 uses the term "dynamic"; is there an intended differentiation?

Comment 18: Is R3.2.2 intended to allow for a station to never be retested in future assessments if it has ever been identified as critical in a previous CIP-014 assessment, or is this requirement intended to permit an entity to not perform both analyses (steady-state and dynamic) if a station is found to

be critical in one analysis in the current assessment? Having an entity operating under the assumption that once a station is critical it will always be critical could lead to inefficient response during an event.

Comment 19: Should R3.4, R3.5, and R3.6 be moved under R3.3 as R3.3.1, R3.3.2, and R3.3.4? In addition, in the existing R3.4 the phrasing is not clear and can potentially be misinterpreted to read that if there was a single substation identified on the R1 list that the testing should be done with a 3LG fault. Suggest that it be reworded:

"Fault simulations on Transmission station(s) or Transmission substation(s) identified in accordance with Requirement R1 that do not include additional proximal facilities shall include a bolted 3-phase fault at the highest voltage level bus."

Comment 20: In R3.5 the standard uses the term "If…" when referencing stations identified in R2; but I believe that the intent of R2 is to create groups of proximal stations, so there will always be 2 stations included under the analysis in R3.5 so "If" should be removed.

Comment 21: R1 refers to creating a list of stations using Attachment 1 of which Criterion 2.1 can identify multiple facilities. However, R3.4, references singular stations and R3.5 refers to the stations added through R2. When read together it is not clear the fault type that should be utilized when testing stations that are identified in Attachment 1 Criterion 2.1. I believe that the testing should include testing of proximal stations individually if they are meeting applicability, and then another simulation that includes testing simultaneous loss of the applicable station and proximal sites.

Comment 22: In R3.6 the term "…system protection…" is used and not "…protection systems…" as is written in R3.2.1. Is the wording change between R3.2.1 and R3.6 intentional? If so, what is the difference intended to communicate?

Comment 23: In R3.6.1 the use of the wording "Delayed (remote)…" is not clear. This could be interpreted identify remote clearing that is further delayed by some phenomena, or to only allow for testing through delayed elements and not an overreaching low time delay pilot scheme like a blocking scheme. Suggest that the wording be changed so that it requires entities to assess it based on the clearing times that would be in effect if all protection system at the station(s) under test were disabled.

Likes 0	
Dislikes 0	

Response

Mark Garza - FirstEnergy - FirstEnergy Corporation - 4, Group Name FE Voter

Answer	No
Document Name	

Comment

The draft standard seems to have three scenarios where a station or stations would need to be studied:
1. An individual station meeting the applicability requirements of Attachment 1 (R1 & Attachment 1, part 2).

2. Multiple stations that individually are not applicable but are applicable when combined (R1 & Attachment 1, part 2.1).

3. Multiple stations with one station that is individually applicable based on R1 and additional stations in close proximity to the first (R2).

Scenario 1 would be tested with a three-phase fault per Part 3.4.
Scenario 3 would be tested with a single-line-to-ground fault per Part 3.5.

However, how should Scenario 2 be tested? Since scenario 2 would be identified by R1, Part 3.4 would apply. But Part 3.4 indicates that it only applies to a singular station (emphasis added).

For faults applied in Requirement R3, Parts 3.4 and 3.5, with actual clearing times used, should the standard address how to handle faults that are not fully cleared or do not outage the entire station?

For example, if a three-phase fault is applied per part 3.4, it could be possible that the relaying of remote breakers on some or all of the lower voltage lines may not be able to see the fault on the highest voltage bus through the transformation, leaving a permanent fault on the system. Should the standard discuss propagation of an uncleared fault to lower voltage level(s)? For example, for a similar type of study, NPCC Document A-10, Section 3.5, Step 1b and Technical Rationale 4 discusses the process of propagating uncleared faults through transformers.

In another example, if a single substation (with all equipment within a single fenced enclosure) has multiple voltage levels that are not connected by transformation, with a three-phase fault applied as per part 3.4, the highest voltage facilities would likely be fully cleared by remote lines, but the lower voltage bus(es) would likely remain energized by some or all source lines. Should faults with stations with multiple, separated voltage levels be simulated like adjacent station as per Part 3.5?

Likes 0	
Dislikes 0	

Response

Tyler Schwendiman - ReliabilityFirst - 10

Answer	No
Document Name	

Comment

For 3.1.1, while the listed categories are a good starting point, the list will lead to confusion for both development of the required methodology and audit of that methodology. Some of the categories presented could be applicable to steady-state analysis, dynamic analysis, or both. It is suggested to reference a table rather than list these categories randomly.
For 3.1.1.4, another consideration is that some of the categories overlap or have a relationship with one another (e.g., ‘Relay loadability’ is a typical factor that contributes to ‘Thermal loading of facilities’). It might be better suited to identify the need to consider relay loadability when determining thermal loading or tripping thresholds of transmission elements).
For 3.1.1.7, suggest the removal of ‘Loss of IBR generation’ since this is already required from the verbiage in 3.1 (i.e., “the amount of acceptable generation loss”). This category could lead to misinterpretation of the requirement to include a more detailed analysis using electromagnetic transient analysis, which is presently not feasibly from a wide-area perspective.
For 3.1.1.11, More clarity is required around this category. Cascading line tripping can be interpreted differently depending on the background and capability of the person performing the analysis and the data available. To some, cascade is a steady-state analysis based on thermal loading above some prescribed level (i.e., 125% of the applicable summer emergency rating). This is in alignment with the idea that the event takes place over a 5-15 min time interval, where conductors are given time to heat up and subsequently trip taking into account the thermal time constants associated with conductors and line ratings. An alternative perspective is immediate cascade tripping for loading outside of a zone 3 relaying scheme, or some type of other protective relaying mechanism tripping the line. This level of relay modeling is not typical in the industry, but more of a best practice. It would be difficult to audit this consistently if this is not a standard practice/capability.

For 3.2, the verbiage, “other System conditions” is ambiguous and should be restated to “at the minimum, one stress scenario”. The stress scenario should also be clearly defined in the required methodology. In addition, 3.2 does not provide any guidance on the year of study (e.g., one year out, two, five, etc.).
For 3.2.1, the stipulation, “including any tripped facilities from dynamic simulations”, seems more like it should be a best practice rather than a requirement. Taking 3.2.1 as written, simulating a substation outage, plus multiple elements that were identified as tripping in dynamic analysis has a higher likelihood of causing a non-convergent solution in steady-state analysis. More clarification is required here in the language to ensure the intent of the requirement is met.
For 3.5, what is the rationale here? If the intent is to simulate a “smoking hole” in 3.4, then the likelihood of debris from the initial attack would result in a single-phase fault at an adjacent substation. It would make more sense to apply a three-phase fault to the first substation, then a single-phase fault to the second.

Likes 0	
Dislikes 0	

Response

Lucinda Bradshaw - Oncor Electric Delivery - 1 - Texas RE

Answer	No
Document Name	

Comment

Oncor disagrees with the modifications in new R3 for the following reasons:

- Thermal overload by itself is not an essential criterion for determining station criticality assuming relay loadability is not exceeded. Oncor suggests removal of thermal loading as a criterion. Thermal loading should be monitored to determine if relay loadability is exceeded.
- “Loss of IBR generation” needs to be clarified as to whether the phrase is referring to consequential or non-consequential generation loss. Additionally, positive-sequence simulations poorly represent actual frequency variations. Frequency calculations can lead to large, unrealistic spikes during faults that may lead to false IBR tripping.
- Frequency exceeding generator limits. As mentioned above, IBR generator tripping could be a result of poor IBR modeling and/or inaccurate frequency calculations in positive-sequence simulations.
- The requirements for the Steady-state volage stability analysis need to be clarified.
- R3.1 and R3.1.2 need to be revised so that the differences between the two sub-requirements are clear.
- The applicable system conditions mentioned in R3.2 need to be defined. Specifically for other system conditions susceptible to instability.
- R3.6.1 and R3.6.2 need to be revised so that the differences between the two sub-requirements are clear.

Likes 0	
Dislikes 0	

Response

Kelley Sargent - Puget Sound Energy, Inc. - 3

Answer	No
Document Name	

Comment
It may be difficult for a utility to define interconnection level thresholds for acceptable load loss and acceptable generation loss (under R3.1.2), which may be better understood and specified by a regional planning authority. It will be helpful if the standard defines the thresholds for acceptable load/generation loss (under R3.1.2), that will differentiate smaller level local impact (non-critical) from an interconnection level widespread impact (critical).

Likes 0	
Dislikes 0	

Response

Lidija Efremova - Lidija Efremova On Behalf of: Emma Halilovic, Hydro One Networks, Inc., 1; - Lidija Efremova

Answer	No
Document Name	

Comment
While dynamic studies may be suitable to determine the criticality of a bus/station, the methodology described in R3 is too onerous on such a standard. CIP-014 is its own standard and should not require repetition of the dynamic studies under the scope of other standards. Performing base case preparation and performance criteria etc. are not suitable for physical security standard. System criticality is already being identified in other NERC standards/requirements. RC's have accountability and oversight into system criticality and the various types of dynamic studies being listed under R3. (It is not within the accountability of the TO's in many jurisdictions). In addition, the *technical rationale document* implies that it's up to the TO to determine which studies are applicable which makes interpretation of the standard confusing. Much of the criteria proposed in R3 are not under the purview or overnight of an individual TO.

Likes 0	
Dislikes 0	

Response

Jay Sethi - Manitoba Hydro - 1,3,5,6 - MRO, Group Name Manitoba Hydro Group

Answer	No
Document Name	

Comment

MH believes that R3.1 is too prescriptive and goes beyond what is expected in the SAR. It is recommended to either remove these details or move them to an attachment as technical guidance. The drafting team didn't mention the use of the under-frequency and/or under-voltage load shed relays, which are important for determining load loss.

MH also suggests making the format change where R3.4-R3.6 should be R3.3.1-R3.3.3.

Likes 0	
Dislikes 0	

Response

Rebika Yitna - Rebika Yitna On Behalf of: Roger Brand, MEAG Power, 3, 1; - Rebika Yitna

Answer	No
Document Name	

Comment

R3 as written is too prescriptive, goes beyond the requirements of the SAR, and limits the flexibility of entities to define and carry out their own risk-based risk assessment methodology based on the unique characteristics of their system(s).

Likes 0	
Dislikes 0	

Response

Jennie Wike - Jennie Wike On Behalf of: John Merrell, Tacoma Public Utilities (Tacoma, WA), 1, 4, 5, 6, 3; - Jennie Wike, Group Name Tacoma Power

Answer	No
Document Name	

Comment

Tacoma Power supports the MRO NSRF comments, as follows.

The subparts of R3.1 are very prescriptive and go significantly beyond the requirements listed in the SAR. One of the primary goals of the SAR was to ensure the inclusion of dynamic studies in the risk assessment and increase clarity around criteria to identify instability, uncontrolled separation or Cascading. The draft goes significantly beyond this, requiring prescriptive technical considerations using criteria not mentioned anywhere in the SAR.

In addition, the drafted R3.6 requires the loss of communication and system protection and the station(s) or substation(s) being studied. Entities have multiple means of communications between relays to clear faults, including powerline carrier, microwave and fiber. Faults are typically cleared in 3-5 cycles (.05-.083 seconds). Gunfire cannot cause this complete outage of all communications before the relays can save the system. For the Metcalf attack many years ago that prompted CIP-014, an attacker entered a communications vault outside the substation and cut communications cables. It is very unlikely an attacker can cut the redundant communication circuits used by relays to communicate between substations or within a substation. The SAR only asks for clarification around the use of delayed clearing in study assumptions, and does not mandate its inclusion as its own sub-requirement.

The MRO NSRF recommends that R3 eliminate the prescriptive sub-parts in 3.1, instead requiring the entity to document its criteria, parameters, and study decisions or assumptions in a study methodology, which must include dynamic and steady-state studies. R3 should also include the consideration of physical proximity criteria within the entity's methodology as outlined in Q4. In addition, the MRO NSRF recommends the removal of R3.6. R3 should include only the minimum specifications listed in the SAR.

Finally, the MRO NSRF recommends that entities design their CIP-014 risk assessment methodology with the focus on realistic and likely threat scenarios.

Administratively, given the colon at the end of R3.3, R3.4 thru 3.6 should be numbered 3.3.1 thru 3.3.3. And then, 3.6.1 should be 3.3.3.1 and 3.6.2 be 3.3.3.2.

Likes 0	
Dislikes 0	

Response

Kevin Conway - Western Power Pool - 4

Answer	No
Document Name	

Comment

R3 is essentially a fill-in-the-blank requirement that may have a list of "check-box" topics. Entities will only strive to meet the minimum expectations of the stated requirement, since going above and beyond will only expose them to more risk. These types of requirements also cause auditors to audit quality, not objective performance. This will be enforced as a zero defect standard, because the entity will miss a "check-box" item, or the auditor will not agree that the entity addressed the subject to their personal satisfaction. Ideally the list should include how much load loss and expected performance metrics that all entities must meet.

Likes 0	
Dislikes 0	

Response

Matt Carden - Southern Company - Southern Company Services, Inc. - 1

Answer	No
Document Name	Attachment 1.docx

Comment

Southern Company agrees with the need for detailed requirements for fault simulations provided in Requirement R3.3, but there is need for some additional clarification or modification of R3.4 and R3.5 based on the assumptions detailed in R3.6.

As written, an unintended consequence of R3.4 would be ambiguity in how to simulate events for transmission stations or transmission substations with multiple voltages. For example, in Figure 1 below, R3.4 would require the placement of a bolted 3-phase fault at the 500kV bus. A clarification is needed in R3.6 on if the loss of communication and protection needs to be assumed for just the highest voltage level bus (i.e. 500kV bus in this exmample) of the transmission subsation(s). If the intent is to cover all voltage levels, the 115kV System in this example would rely on breakers at remote stations H,

I, and J to clear the fault (based on assumptions outlined in R3.6). Additional assumptions of the simulated event not provided in Requirement R3 would need to be made since those stations may or may not clear for the initial fault at the 500kV bus of study. This could lead to inconsistency in analysis.

See Attachment 1 for figure 1.

Additionally, the fault simulations could vary greatly between a singular substation with multiple voltages and multiple substations with multiple voltages for the same event. In Figure 2, R3.5 would require simulation of simultaneous single line to ground faults at the 500kV and 115kV buses for a nearly identical event as Figure 1 (assuming physical proximity of the two events is also similar).

See attachment 1 for figure 2.

Southern Company recommends simplifying the simulations required to include faults at all voltage level buses of the applicable transmission station(s) or substation(s). This would provide clarity for what should be simulated and avoid excessively complex simulations for the assessment.

Southern Company recommends removing “and other System conditions” from Requirement R3.2. The inclusion of other System conditions could lead to varying interpretations and expectations regarding the assessment requirements.

Likes 0	
Dislikes 0	

Response

James Keele - Entergy - 3

Answer	No
Document Name	

Comment

part that gives me concern, is some of the specific language proposed in R3 (see below) that could change the way we are doing the assessment and cause impacts to the potential changes or even increase the current list. Item 3.6 is probably most concerning to me and want to make sure we are effectively reviewing that info with the SME’s and providing comments back to the drafting team if it has negative consequences for us.

3.2.1.Steady state analysis shall include the removal of all elements that Protection Systems and other controls are expected to automatically disconnect for each event, including any tripped facilities from dynamic simulations.

3.2.1. Adding tripped generators from the dynamic stability study to the steady-state contingency definition would create overly conservative results. Historically, both studies have been done in parallel and not directly informed each other.

Steady-state studies typically assume constant power loads where power does not vary with changes in voltage magnitude. This is a valid assumption for steady state studies but in reality, loads do not behave this way and differs greatly from how loads are represented in dynamic studies.

For dynamic studies the composite load model (CMLD) has seen increased adoption among utilities and more accurately reflects the aggregate behavior of motors. The model includes parameters which dictate fractions of the motor load components that do not restart, even if voltage recovers above the undervoltage trip thresholds. There is currently no industry consensus on whether this fraction of non-restart able motor loss is consequential

or non-consequential load loss. Entergy's stance is that this is consequential load loss as it's impossible to prevent and would occur even for normally cleared faults due to typical undervoltage time delays of 2-3 cycles. Consequential load loss is commonly excluded from steady-state load loss criteria.

In summary, reflecting tripped generators from the stability study to the steady-state study would only make sense if loads were also reduced by the fraction of non-restart able motor loss. This would be extremely tedious as there is currently no practical way to achieve this with the tools available to Transmission Planners. There may be other issues that may need to be considered. Removal of the "including any tripped facilities from dynamic simulations" language should be considered.

3.6. Fault simulations shall assume the loss of communication and system protection at the Transmission station(s) or Transmission substation(s) studied under Requirement R3, Parts 3.4 and 3.5.

3.6.1. Delayed (remote) clearing times shall be used unless otherwise technically substantiated.

3.6.2. Actual clearing times shall be used unless otherwise technically substantiated.

3.6 Existing language may lead to multiple interpretations at stations with multiple control houses. Although the standard doesn't specifically mention control houses, a total loss of communication and system protection would likely be the result of control house being damaged/destroyed.

{C}· One interpretation could be that the loss of a single control house satisfies the considering the "loss of communication and system protection at the Transmission station(s) or Transmission substation(s) requirement" language. The existence of a second control house would then be used as the technical basis [3.6.1.] as to why you wouldn't have delayed clearing on some elements.

{C}· Another interpretation could be to assume the loss of all communication and system protection which means all the control houses at the Transmission station(s) or Transmission substation(s) are destroyed.

Likes 0	
Dislikes 0	

Response

Robert Follini - Avista - Avista Corporation - 3

Answer	No
Document Name	

Comment

R3 is poorly written but meets the intent of addressing issues identified in the SAR. The requirement as written mixes methodology concepts with criteria for evaluation. Sub-requirement R3.3 does not clearly state how a "fault simulation" is applicable to either dynamic and/or steady state simulations.

Likes 0	
Dislikes 0	

Response

Jessica Cordero - Unisource - Tucson Electric Power Co. - 1

Answer	No

Document Name	
Comment	
Need clarification on R3.1.1.8 “Frequency exceeding generator limits”. R3.2.2: implies once a site is deemed critical, it remains critical. There needs to be a process to remove stations from critical list if in future assessments it is deemed non-critical. As written, R3.4, R3.5, and R3.6 should be sub requirements of R3.3.	
Likes 0	
Dislikes 0	
Response	
Alison Nickells - NiSource - Northern Indiana Public Service Co. - 1 - RF	
Answer	No
Document Name	
Comment	
Likes 0	
Dislikes 0	
Response	
John Pearson - ISO New England, Inc. - 2	
Answer	Yes
Document Name	
Comment	
While we agree that the modification meets the intent of the SAR, in sub-requirement R3.4 uses the term “”bolted 3-phase fault”. This is inconsistent with other NERC standards. We suggest simply using the term 3-phase fault.	
Likes 0	
Dislikes 0	
Response	
Anne Kronshage - Public Utility District No. 1 of Chelan County - 6, Group Name Public Utility District No. 1 of Chelan County - Voting Group	
Answer	Yes
Document Name	

Comment
Requiring TOPs to have a documented risk assessment methodology for evaluating their applicable stations and establishing the minimum methodology requirements helps to address the issues identified in the SAR. However, the list of mandatory criteria under R3.1. is quite prescriptive; these sorts of standard practices are to be avoided, to be better suited under technical guidance. There is no precedence for this level of specificity in any other NERC study performance standard to our knowledge. Furthermore, NERC has failed to provide a rationale behind why all of these criteria are critical to be included in the assessment and analysis. Additionally, in R3.2, there is a term '**other System conditions susceptible to** instability, uncontrolled separation, or Cascading within an Interconnection' (emphasis added). This is vague and undefined; the expectation is not clear, and this is a case of chicken-and-egg – one cannot know such an outcome unless one has run a study, but one would not run such a study unless one already knew that a particular condition was susceptible. It is recommended this language be removed. System peak and System Off-Peak are common terms in TPL-001-5 and are supported as adequate indicators. NERC may consider these being the required minimum study conditions, but open the door to such things as the 'other System conditions susceptible to'… as optional studies, or mandatory if requested by an RC, PC, etc (similar to the selection criteria of stations – moving that concept to the conditions to be studied as well). Further, the modification in R3.2.2. regarding stations that have been identified as critical makes it unclear how or if a station may be "un-identified". For example, if a CAP speeds up clearing times for loss of communication times and this prevents an identified instability, could the analysis be re-run and the station re-categorized? This is unclear with the new language proposed in R3.2.2. It does not appear that such instances of de-listing a station have been contemplated. As a piece of minor editorial recommendation; the sections 3.4, 3.5, and 3.6 following R3.3 are functionally sub-requirements of R3.3. It is recommended these be treated as R3.3.1, R3.3.2, and R3.3.3 instead. For item 3.4, it does not allow more severe faults; for example, if instead of bolting a fault at the highest voltage bus, faulting all lines into the station (regardless of voltage level) with a three phase bolted fault would arguably be a more severe event. However, the current language would not support running a more severe fault as an acceptable analysis. Furthermore, the 'highest voltage level bus' is ambiguous in cases where a station may have multiple bus sections (such as 500 kV breaker-and-a-half stations), or a transformer terminated line (such as a 500/230 kV transformer at a 230 kV station). In these cases, this prescriptive requirement seems to result in unclear or less severe events. Lastly, R3.6.2 currently requires the use of 'Actual clearing times', but the basis for this is unclear – hopefully these physical attacks have not occurred at many stations, so the 'actual' has never been observed. 'Expected' would be a more preferred term. Similarly, R3.6.1 requires use of Delayed (remote) clearing time, but if a scheme drops its zone 2 delay if communication is lost, here as well 'Expected' clearing time may be a better word choice.

Likes 0	
Dislikes 0	

Response

Daniel Gacek - Exelon - 1, Group Name Exelon

Answer	Yes
Document Name	

Comment

Likes 0	
Dislikes 0	

Response

Rachel Coyne - Texas Reliability Entity, Inc. - 10	
Answer	Yes
Document Name	
Comment	
Likes 0	
Dislikes 0	
Response	
Tim Kelley - Tim Kelley On Behalf of: Charles Norton, Sacramento Municipal Utility District, 3, 6, 4, 1, 5; Foung Mua, Sacramento Municipal Utility District, 3, 6, 4, 1, 5; Kevin Smith, Balancing Authority of Northern California, 1; Nicole Looney, Sacramento Municipal Utility District, 3, 6, 4, 1, 5; Ryder Couch, Sacramento Municipal Utility District, 3, 6, 4, 1, 5; Wei Shao, Sacramento Municipal Utility District, 3, 6, 4, 1, 5; - Tim Kelley, Group Name SMUD and BANC	
Answer	Yes
Document Name	
Comment	
Likes 0	
Dislikes 0	
Response	
Richard Jackson - U.S. Bureau of Reclamation - 1	
Answer	Yes
Document Name	
Comment	
Likes 0	
Dislikes 0	
Response	
Devin Shines - PPL - Louisville Gas and Electric Co. - 1,3,5,6 - SERC,RF	
Answer	

Document Name	
Comment	
Louisville Gas & Electric and Kentucky Utilities support EEI's comments.	
Likes 0	
Dislikes 0	
Response	

5. Do you agree with the modifications made in CIP-014-4 with new Requirement R4 to address the issues identified in the SAR?

Jessica Cordero - Unisource - Tucson Electric Power Co. - 1

Answer	No
Document Name	

Comment

Unable to locate in the SAR where this is requested.

Likes 0	
Dislikes 0	

Response

Matt Carden - Southern Company - Southern Company Services, Inc. - 1

Answer	No
Document Name	

Comment

Southern Company agrees with the need to coordinate responsibilities. However, we seek clarification regarding the requirement to document every 36 months responsibilities for stations that have already previously been coordinated and documented in previous assessments.

Additionally, Southern Company wants to confirm the SDT intends to only require this coordination for jointly owned stations – not also stations with one owner that may have jointly owned equipment.

Likes 0	
Dislikes 0	

Response

Kevin Conway - Western Power Pool - 4

Answer	No
Document Name	

Comment

The R4 requirement goes beyond the SAR requiring coordination of responsibilities of jointly owned facilities every 36 calendar months. This is well beyond what the SAR states, and R4 should focus on written agreements determining responsibilities. Those agreements could sunset or be indefinite. Small entities, like those in the Pacific Northwest, commonly have interconnections with Bonneville Power, or other large agencies. They requirement to coordinate every 36 months will be burdensome, add compliance risk, and not enhance the process.

Likes 0	
Dislikes 0	
Response	
Rebika Yitna - Rebika Yitna On Behalf of: Roger Brand, MEAG Power, 3, 1; - Rebika Yitna	
Answer	No
Document Name	
Comment	
Why is there a need to coordinate responsibilities every 36 months for stations that have already previously been coordinated and documented? Also, clarification is requested for 'jointly owned stations': Does the SDT intend to only require this coordination for jointly owned stations and not also for stations with one owner that may have jointly owned equipment?	
Likes 0	
Dislikes 0	
Response	
Jay Sethi - Manitoba Hydro - 1,3,5,6 - MRO, Group Name Manitoba Hydro Group	
Answer	No
Document Name	
Comment	
MH is suggesting including adjacent transmission owners with Transmission stations in close proximity (identified under R2) in addition to jointly owned Transmission stations to coordinate with each other when performing a risk assessment.	
Likes 0	
Dislikes 0	
Response	
Michele Tondalo - United Illuminating Co. - 1	
Answer	No
Document Name	
Comment	

Comment 24: R4 is worded that each Transmission Owner must coordinate with others on jointly owned facilities but does not indicate that this coordination can be performed concurrently. In addition, in R4 the inclusion of the at timing "…at least once every 36 months." Is easily confused with the timeframe for performing assessment in R5. Suggested rewording:

"At least once every 36 calendar months Transmission Owners with jointly owned Transmission station(s) and Transmission substation(s) shall jointly determine and identify each entity's individual and joint responsibilities for performing any required risk assessments.

Comment 25: R4 does not include details on how Transmission Owners shall coordinate with other sole-owners of proximal facilities identified in R2; it only discusses how to handle joint ownership. Suggest that R4 be expanded to make sure that Transmission Owners that own stations that are proximal are tested in a similar manner.

Likes 0	
Dislikes 0	

Response

Michele Shafer - New York State Electric & Gas (NYSEG) - 6

Answer	No
Document Name	

Comment

- R4 is worded that each Transmission Owner must coordinate with others on jointly owned facilities but does not indicate that this coordination can be performed concurrently. In addition, in R4 the inclusion of the at timing "…at least once every 36 months." Is easily confused with the timeframe for performing assessment in R5. Suggested rewording:
  "**At least once every 36 calendar months** Transmission Owner**s** with **jointly** owned Transmission station(s) and Transmission substation(s) shall jointly determine and identify each entity's individual and joint responsibilities for performing any required risk assessments.
- R4 does not include details on how Transmission Owners shall coordinate with other sole-owners of proximal facilities identified in R2; it only discusses how to handle joint ownership. Suggest that R4 be expanded to make sure that Transmission Owners that own stations that are proximal are tested in a similar manner.

Likes 0	
Dislikes 0	

Response

Brian Millard - Tennessee Valley Authority - 1,3,5,6 - SERC, Group Name TVA RBB

Answer	No
Document Name	

Comment

TVA disagrees with the modifications made to R4. Additional clarity is needed regarding "coordination" and the compliance burden given the potential that one Transmission Owner may request coordination, but not receive a response from another Transmission Owner.

Likes 0	
Dislikes 0	

Response

Alan Kloster - Alan Kloster On Behalf of: Jeremy Harris, Evergy, 3, 5, 1, 6; Kevin Frick, Evergy, 3, 5, 1, 6; Marcus Moor, Evergy, 3, 5, 1, 6; Tiffany Lake, Evergy, 3, 5, 1, 6; - Alan Kloster

Answer	No
Document Name	

Comment

Evergy supports and incorporates by reference the comments of the Edison Electric Insitute (EEI) for question #5.

Likes 0	
Dislikes 0	

Response

Cain Braveheart - Bonneville Power Administration - 1,3,5,6 - WECC

Answer	No
Document Name	

Comment

It appears to BPA that the SAR does not include content on a problem needing to be resolved when there is joint ownership of a substation. The SAR's purpose only states "Clarify how to account for adjacent Transmission stations or Transmission substations of differing ownership as well as for those Transmission stations or Transmission substations within line-of-sight to each other."

Likes 0	
Dislikes 0	

Response

Karen Demos - NextEra Energy - Florida Power and Light Co. - 3

Answer	No
Document Name	

Comment

NextEra/FPL supports EEI's comments

Likes 0	
Dislikes 0	
Response	
Richard Vendetti - NextEra Energy - 5	
Answer	No
Document Name	
Comment	
NEE support's EEI comments: " EEI proposes the following revisions to Requirement R4: Each Transmission Owner**s** with jointly owned Transmission station(s) and Transmission substation(s) shall coordinate to determine and identify each entity's individual and joint responsibilities for performing any required risk assessments at least once every 36 calendar months. "	
Likes 0	
Dislikes 0	
Response	
Rachel Schuldt - Black Hills Corporation - 6, Group Name Black Hills Corporation - All Segments	
Answer	No
Document Name	
Comment	
Black Hills Corporation agrees with EEI comments and the proposed changes.	
Likes 0	
Dislikes 0	
Response	
Sean Bodkin - Dominion - Dominion Resources, Inc. - 6, Group Name Dominion	
Answer	No
Document Name	
Comment	
Dominion Energy supports EEI comments.	

Likes 0	
Dislikes 0	
Response	
John Pearson - ISO New England, Inc. - 2	
Answer	No
Document Name	
Comment	
For R4, the requirement should include join ownership proximity groups. *Each Transmission Owner with jointly owned Transmission station(s), Transmission substation(s)* ***and proximity groups*** *shall coordinate to determine and identify each entity's individual and joint responsibilities for performing any required risk assessments at least once every* 36 calendar months.	
Likes 0	
Dislikes 0	
Response	
Devin Shines - PPL - Louisville Gas and Electric Co. - 1,3,5,6 - SERC,RF	
Answer	No
Document Name	
Comment	
Louisville Gas & Electric and Kentucky Utilities support EEI's comments.	
Likes 0	
Dislikes 0	
Response	
Israel Perez - Israel Perez On Behalf of: Laura Somak, Salt River Project, 3, 6, 5, 1; Mathew Weber, Salt River Project, 3, 6, 5, 1; Thomas Johnson, Salt River Project, 3, 6, 5, 1; Timothy Singh, Salt River Project, 3, 6, 5, 1; - Israel Perez	
Answer	No
Document Name	
Comment	
SRP supports the MRO NSRF with Tacoma Power's comments.	

Likes 0	
Dislikes 0	

Response

Teresa Krabe - Lower Colorado River Authority - 5

Answer	No
Document Name	

Comment

The standard or guidance should explain how disagreements between entities should be handled.

It is not clear if R4 is intended to incorporate the stations in close proximity identified in R2.

Likes 0	
Dislikes 0	

Response

Dave Krueger - SERC Reliability Corporation - 10

Answer	No
Document Name	

Comment

Thank you for the chance to comment, SERC appreciates the complexity of the SDT's task of modifying multiple parts of such a high profile and high-priority standard.

Item #4.A: We would suggest the joint ownership language be made inclusive of multiple owners of Transmission Elements within a Transmission Station/Substation (vs ownership of the Station/Substation itself) since mixed ownership of the land, protection system components, and BES Facilities within and extending outward from the substation may vary significantly. One suggestion would be to state : "Each Transmission Owner with Transmission stations and Transmission Substations where a portion of the of the locations or its contents are jointly owned with another entity, shall….". This would allow flexibility under different ownership situations to be addressed in the manner desired by the owners and increase clarity.

Item #4.B SAR Scope Item #5 states "Clarify how to account for adjacent Transmission stations or Transmission substations of differing ownership…" It appears that conflict may arise if two separate TOs come to differing conclusions about the methodology parameters and criteria in R2, R3, and ultimately R5. This tracks back to gaining the full clarity mentioned in SAR Detailed Description #5: *"Provide clear expectations regarding the inclusion of physically adjacent elements for the purpose of evaluating the impact from a physical attack."* It is unclear on how the requirements as written will ensure consistency in inclusion such that the two (or more) differing owners do not come to different conclusions about the composition of proximity groups, the criteria for the risk assessment methodology, or the conclusions of the methodology per substation. Would it be clearer to state that absent some other factor, the most limiting of two competing conclusions would be used, similar to the language in TOP-001-6 R18?

Item #4.C: We would suggest that the phrase "and document" follow the verb "coordinate" to provide clarity on compliance evidence expectations. Evidentiary capture and demonstration of coordination occurring at a certain date has been difficult and problematic in other past

standards, such as CIP-012-1 R1.3 (“…identification of…”) and CIP-013-2 R1.1 (“…assess…”) – adding “document” or a similar verb could address this.	
Likes 0	
Dislikes 0	
Response	
Jeffrey Streifling - NB Power Corporation - 1	
Answer	No
Document Name	
Comment	
Is the 36-month periodicity regarding the coordination, the risk assessment, or both? We suggest adding that only changes in responsibilities of Joint substation or stations should be documented once every 36 months or attestation that no changes occurred in responsibilities during the 36-month period. At scale, these substation and stations can be an administrative burden due to the number of agreements an entity may have, and an overarching document may be a better solution for management of these agreements. We are unsure of the intended goal or end value of the requirement and would like clarification. Does the outcome of the risk assessment need to be agreed to by both parties of a Joint substation or station? Additional clarification on what is expected for the outcome of the coordinated risk assessment should be clarified.	
Likes 0	
Dislikes 0	
Response	
Chantal Mazza - Chantal Mazza On Behalf of: Junji Yamaguchi, Hydro-Quebec (HQ), 1, 5; Nicolas Turcotte, Hydro-Quebec (HQ), 1, 5; - Chantal Mazza	
Answer	No
Document Name	
Comment	
Is the 36-month periodicity regarding the coordination, the risk assessment, or both? We suggest adding that only changes in responsibilities of Joint substation or stations should be documented once every 36 months or attestation that no changes occurred in responsibilities during the 36-month period. At scale, these substation and stations can be an administrative burden due to the number of agreements an entity may have, and an overarching document may be a better solution for management of these agreements. We are unsure of the intended goal or end value of the requirement and would like clarification. Does the outcome of the risk assessment need to be agreed to by both parties of a Joint substation or station? Additional clarification on what is expected for the outcome of the coordinated risk assessment should be clarified.	
Likes 0	
Dislikes 0	

Response	
Fon Hiew - NB Power Corporation - New Brunswick Power Transmission Corporation - 5	
Answer	No
Document Name	
Comment	
Is the 36-month periodicity regarding the coordination, the risk assessment, or both? We suggest adding that only changes in responsibilities of Joint substation or stations should be documented once every 36 months or attestation that no changes occurred in responsibilities during the 36-month period. At scale, these substation and stations can be an administrative burden due to the number of agreements an entity may have, and an overarching document may be a better solution for management of these agreements. We are unsure of the intended goal or end value of the requirement and would like clarification. Does the outcome of the risk assessment need to be agreed to by both parties of a Joint substation or station? Additional clarification on what is expected for the outcome of the coordinated risk assessment should be clarified.	
Likes 0	
Dislikes 0	
Response	
Andy Fuhrman - Andy Fuhrman On Behalf of: Theresa Allard, Minnkota Power Cooperative Inc., 1; - Andy Fuhrman	
Answer	No
Document Name	
Comment	
MPC strongly disagrees with the use of a 36 month timeframe for utilities who have not previously identified substations as critical for the same reasons specified in our comments for question 6.	
Likes 0	
Dislikes 0	
Response	
Hillary Creurer - Allete - Minnesota Power, Inc. - 1	
Answer	No
Document Name	
Comment	

Minnesota Power supports EEI's comments.	
Likes 0	
Dislikes 0	
Response	
David Jendras Sr - Ameren - Ameren Services - 3	
Answer	No
Document Name	
Comment	
Ameren supports EEI's comments on this project.	
Likes 0	
Dislikes 0	
Response	
Kristine Martz - Edison Electric Institute - NA - Not Applicable - NA - Not Applicable	
Answer	No
Document Name	
Comment	
EEI proposes the following revisions to Requirement R4: Transmission Owner**s** with jointly owned Transmission station(s) and Transmission substation(s) shall coordinate to determine and identify each entity's individual and joint responsibilities for performing any required risk assessments.	
Likes 0	
Dislikes 0	
Response	
Stephen Stafford - Stephen Stafford On Behalf of: Greg Davis, Georgia Transmission Corporation, 1; - Stephen Stafford	
Answer	No
Document Name	
Comment	

Jointly coordinating responsibilities related to an assessment is not problematic. However, this standard ties the risk assessment to analysis that the TO is not equipped to perform. Therefore, coordination is not possible until this problematic construct is addressed.

Likes 0	
Dislikes 0	

Response

James Baldwin - James Baldwin On Behalf of: Matt Lewis, Lower Colorado River Authority, 5, 1; - James Baldwin

Answer	No
Document Name	

Comment

The standard or guidance should explain how disagreements between entities should be handled.

It is not clear If R4 is intended to incorporate the stations in close proximity identified in R2.

Likes 0	
Dislikes 0	

Response

Selene Willis - Edison International - Southern California Edison Company - 5

Answer	No
Document Name	

Comment

See comments submitted by the Edison Eclectic Institute

Likes 0	
Dislikes 0	

Response

Ruida Shu - Northeast Power Coordinating Council - 1,2,3,4,5,6,7,8,9,10 - NPCC, Group Name NPCC RSC

Answer	No
Document Name	

Comment

Is the 36-month periodicity regarding the coordination, the risk assessment, or both? We suggest adding that only changes in responsibilities of Joint substation or stations should be documented once every 36 months or attestation that no changes occurred in responsibilities during the 36-month period. At scale, these substation and stations can be an administrative burden due to the number of agreements an entity may have, and an overarching document may be a better solution for management of these agreements. We are unsure of the intended goal or end value of the requirement and would like clarification.

Does the outcome of the risk assessment need to be agreed to by both parties of a Joint substation or station? Additional clarification on what is expected for the outcome of the coordinated risk assessment should be clarified.

Likes 0	
Dislikes 0	

Response

Dwanique Spiller - Berkshire Hathaway - NV Energy - 5

Answer	No
Document Name	

Comment

NV Energy supports the EEI response to this question.

Likes 0	
Dislikes 0	

Response

Stephanie Kenny - Edison International - Southern California Edison Company - 6

Answer	No
Document Name	

Comment

See EEI comments

Likes 0	
Dislikes 0	

Response

Gail Elliott - Gail Elliott On Behalf of: Michael Moltane, International Transmission Company Holdings Corporation, 1; - Gail Elliott

Answer	No

Document Name	
Comment	
ITC supports the EEI response	
Likes 0	
Dislikes 0	
Response	
Amy Wesselkamper - PNM Resources - Public Service Company of New Mexico - 3	
Answer	No
Document Name	
Comment	
PNM and TNMP support EEI comments regarding R4, noted again here *"EEI proposes the following revisions to Requirement R4:* *Transmission Owner**s** with jointly owned Transmission station(s) and Transmission substation(s) shall coordinate to determine and identify each entity's individual and joint responsibilities for performing any required risk assessments."*	
Likes 0	
Dislikes 0	
Response	
Jason Snodgrass - Jason Snodgrass On Behalf of: Katrina Lyons, Georgia System Operations Corporation, 3, 4; - Jason Snodgrass	
Answer	No
Document Name	
Comment	
GSOC supports comments provided by Georgia Transmission	
Likes 0	
Dislikes 0	
Response	
Mark Garza - FirstEnergy - FirstEnergy Corporation - 4, Group Name FE Voter	

Answer	Yes
Document Name	
Comment	
FirstEnergy has no objection.	
Likes 0	
Dislikes 0	
Response	
Ben Hammer - Western Area Power Administration - 1	
Answer	Yes
Document Name	
Comment	
While WAPA agrees it is positive to have coordination with jointly owned entities, consider situations where the different methodologies result in a different answers, especially when taking into account different definitions of physical proximity.	
Likes 0	
Dislikes 0	
Response	
Michael Dillard - Austin Energy - 5, Group Name Austin Energy	
Answer	Yes
Document Name	
Comment	
Austin Energy supports MRO's comments. Attached in Question 1.	
Likes 0	
Dislikes 0	
Response	
Ellese Murphy - Duke Energy - 1,3,5,6 - Texas RE,SERC,RF	
Answer	Yes
Document Name	

Comment	
We support the modifications made in R4.	
Likes 0	
Dislikes 0	
Response	
Mark Flanary - Midwest Reliability Organization - 10	
Answer	Yes
Document Name	
Comment	
As it is currently written the ordering with R4 coming later can cause some confusion and re-work. Consider combining / incorporating the intent of this Requirement into earlier Requirements, specifically R1 and R2, or reference R1 and R2 as part of R4.	
Likes 0	
Dislikes 0	
Response	
Carver Powers - Utility Services, Inc. - 4	
Answer	Yes
Document Name	
Comment	
Request clarification on the determination and identification of each entity’s individual and joint responsibilities for performing any required risk assessment. Does the determination need to be approved by both parties of the joint substation or station?	
Likes 0	
Dislikes 0	
Response	
Steven Rueckert - Western Electricity Coordinating Council - 10, Group Name WECC Entity Monitoring	
Answer	Yes
Document Name	
Comment	

Requirement R4 uses “jointly owned” which stalled Project 2021-08 is seeking to help define. Registered entities should be focused on the reliability aspects of both Projects and can easily limit compliance concerns by taking a practical approach to what is being requested to mitigate risk. Project 2021-08 suggested “For a BES Facility where no entity owns the Facility in its entirety, all applicable entities that own the Facility shall coordinate...”. A similar approach should be used here by stating “A Transmission station or Transmission substation where no single entity owns all equipment within the Transmission station or Transmission substation shall coordinate and document…” (with “and document” added to ensure that efforts are reflected appropriately. Industry should understand the risk (here related to physical security and reliability) associated with Transmission station(s) and Transmission substation(s) with multiple owners needs to be addressed.

Likes 0	
Dislikes 0	

Response

Robert Follini - Avista - Avista Corporation - 3

Answer	Yes
Document Name	

Comment

Likes 0	
Dislikes 0	

Response

James Keele - Entergy - 3

Answer	Yes
Document Name	

Comment

Likes 0	
Dislikes 0	

Response

Richard Jackson - U.S. Bureau of Reclamation - 1

Answer	Yes
Document Name	

Comment

Likes 0	
Dislikes 0	
Response	
Jennie Wike - Jennie Wike On Behalf of: John Merrell, Tacoma Public Utilities (Tacoma, WA), 1, 4, 5, 6, 3; - Jennie Wike, Group Name Tacoma Power	
Answer	Yes
Document Name	
Comment	
Likes 0	
Dislikes 0	
Response	
Kelley Sargent - Puget Sound Energy, Inc. - 3	
Answer	Yes
Document Name	
Comment	
Likes 0	
Dislikes 0	
Response	
Lucinda Bradshaw - Oncor Electric Delivery - 1 - Texas RE	
Answer	Yes
Document Name	
Comment	
Likes 0	
Dislikes 0	
Response	

Alison Nickells - NiSource - Northern Indiana Public Service Co. - 1 - RF	
Answer	Yes
Document Name	
Comment	
Likes 0	
Dislikes 0	
Response	
Tyler Schwendiman - ReliabilityFirst - 10	
Answer	Yes
Document Name	
Comment	
Likes 0	
Dislikes 0	
Response	
Anna Martinson - MRO - 1,2,3,4,5,6 - MRO, Group Name MRO Group	
Answer	Yes
Document Name	
Comment	
Likes 1	Lincoln Electric System, 1, Johnson Josh
Dislikes 0	
Response	
Leshel Hutchings - AEP - 3	
Answer	Yes
Document Name	
Comment	

Likes 0	
Dislikes 0	
Response	
TRACEY JOHNSON - Southern Indiana Gas and Electric Co. - 3,5,6 - RF	
Answer	Yes
Document Name	
Comment	
Likes 0	
Dislikes 0	
Response	
Diana Aguas - CenterPoint Energy Houston Electric, LLC - 1 - Texas RE	
Answer	Yes
Document Name	
Comment	
Likes 0	
Dislikes 0	
Response	
Anne Kronshage - Public Utility District No. 1 of Chelan County - 6, Group Name Public Utility District No. 1 of Chelan County - Voting Group	
Answer	Yes
Document Name	
Comment	
Likes 0	
Dislikes 0	
Response	

Jennifer Bray - Arizona Electric Power Cooperative, Inc. - 1	
Answer	Yes
Document Name	
Comment	
Likes 0	
Dislikes 0	
Response	
Donna Wood - Tri-State G and T Association, Inc. - 1	
Answer	Yes
Document Name	
Comment	
Likes 0	
Dislikes 0	
Response	
Tim Kelley - Tim Kelley On Behalf of: Charles Norton, Sacramento Municipal Utility District, 3, 6, 4, 1, 5; Foung Mua, Sacramento Municipal Utility District, 3, 6, 4, 1, 5; Kevin Smith, Balancing Authority of Northern California, 1; Nicole Looney, Sacramento Municipal Utility District, 3, 6, 4, 1, 5; Ryder Couch, Sacramento Municipal Utility District, 3, 6, 4, 1, 5; Wei Shao, Sacramento Municipal Utility District, 3, 6, 4, 1, 5; - Tim Kelley, Group Name SMUD and BANC	
Answer	Yes
Document Name	
Comment	
Likes 0	
Dislikes 0	
Response	
Joshua London - Eversource Energy - 1, Group Name Eversource	
Answer	Yes
Document Name	

Comment	
Likes 0	
Dislikes 0	
Response	
Andrew Smith - APS - Arizona Public Service Co. - 5	
Answer	Yes
Document Name	
Comment	
Likes 0	
Dislikes 0	
Response	
Rachel Coyne - Texas Reliability Entity, Inc. - 10	
Answer	Yes
Document Name	
Comment	
Likes 0	
Dislikes 0	
Response	
Denise Sanchez - Denise Sanchez On Behalf of: Diana Torres, Imperial Irrigation District, 1, 6, 5, 3; George Kirschner, Imperial Irrigation District, 1, 6, 5, 3; Jesus Sammy Alcaraz, Imperial Irrigation District, 1, 6, 5, 3; Tino Zaragoza, Imperial Irrigation District, 1, 6, 5, 3; - Denise Sanchez	
Answer	Yes
Document Name	
Comment	
Likes 0	
Dislikes 0	

Response	
Jesus Sammy Alcaraz - Imperial Irrigation District - 1	
Answer	Yes
Document Name	
Comment	
Likes 0	
Dislikes 0	
Response	
Mike Magruder - Avista - Avista Corporation - 1,3,5	
Answer	Yes
Document Name	
Comment	
Likes 0	
Dislikes 0	
Response	
Daniel Gacek - Exelon - 1, Group Name Exelon	
Answer	Yes
Document Name	
Comment	
Likes 0	
Dislikes 0	
Response	
Michael Jang - Seattle City Light - 1	
Answer	Yes
Document Name	

Comment	
Likes 0	
Dislikes 0	
Response	
Chris Shultz - Seattle City Light - 5	
Answer	Yes
Document Name	
Comment	
Likes 0	
Dislikes 0	
Response	
Robert Jones - Seattle City Light - 4	
Answer	Yes
Document Name	
Comment	
Likes 0	
Dislikes 0	
Response	
Daren Brubaker - Seattle City Light - 6	
Answer	Yes
Document Name	
Comment	
Likes 0	
Dislikes 0	
Response	

Zenon O'young-Chu - Seattle City Light - 3	
Answer	Yes
Document Name	
Comment	
Likes 0	
Dislikes 0	
Response	
Chris Wagner - Santee Cooper - 1, Group Name Santee Cooper	
Answer	Yes
Document Name	
Comment	
Likes 0	
Dislikes 0	
Response	
Jodirah Green - ACES Power Marketing - 1,3,4,5,6 - MRO,WECC,Texas RE,SERC,RF, Group Name ACES Collaborators	
Answer	Yes
Document Name	
Comment	
Likes 0	
Dislikes 0	
Response	

6. Do you agree with the modifications made in CIP-014-4 with adding Requirement R5 to address the issues identified in the SAR?

Jodirah Green - ACES Power Marketing - 1,3,4,5,6 - MRO,WECC,Texas RE,SERC,RF, Group Name ACES Collaborators

Answer	No
Document Name	

Comment

The current draft, R5 requires a risk assessment without explicitly stating what the risk assessment is supposed to achieve. ACES suggests clarifying language to have a clear objective outcome based on the assessment.

Likes 0	
Dislikes 0	

Response

Jason Snodgrass - Jason Snodgrass On Behalf of: Katrina Lyons, Georgia System Operations Corporation, 3, 4; - Jason Snodgrass

Answer	No
Document Name	

Comment

GSOC supports comments provided by Georgia Transmission

Likes 0	
Dislikes 0	

Response

Amy Wesselkamper - PNM Resources - Public Service Company of New Mexico - 3

Answer	No
Document Name	

Comment

PNM and TNMP support EEI comments regarding R4, noted again here

"EEI proposes the following revision to Requirement R5 because R1 is the only requirement that speaks directly to applicability:

Each Transmission Owner shall conduct a risk assessment, using the methodology established in Requirement R3, on each Transmission station(s) and Transmission substation(s) identified as applicable in accordance with Requirements R1, R2, and R4 at least once every 36 calendar months. ***Jointly owned Transmission station(s) and Transmission substation(s) identified as applicable in Requirement R1 shall be evaluated as coordinated in Requirement R4."***

Likes 0	
Dislikes 0	
Response	
Gail Elliott - Gail Elliott On Behalf of: Michael Moltane, International Transmission Company Holdings Corporation, 1; - Gail Elliott	
Answer	No
Document Name	
Comment	
ITC supports the EEI response	
Likes 0	
Dislikes 0	
Response	
Stephanie Kenny - Edison International - Southern California Edison Company - 6	
Answer	No
Document Name	
Comment	
See EEI comments	
Likes 0	
Dislikes 0	
Response	
Dwanique Spiller - Berkshire Hathaway - NV Energy - 5	
Answer	No
Document Name	
Comment	
NV Energy supports the EEI response to this question.	
Likes 0	
Dislikes 0	

Response	
Ruida Shu - Northeast Power Coordinating Council - 1,2,3,4,5,6,7,8,9,10 - NPCC, Group Name NPCC RSC	
Answer	No
Document Name	
Comment	
We suggest tightening the language of Part 5.2 dealing with proximity and ability of a TO ability to designate a Control Center with other TO or TOPs. We suggest added language about information security between entities where a TO designate another entities Control Center in part 5.2. A Requirement R5.3 should be added stating something similar to “Transmission Owners of stations within proximity of other Transmission Owners as determined in R2 should share the results of their analyses related to the stations within proximity with all the other Transmission Owners of the stations within proximity."	
Likes 0	
Dislikes 0	
Response	
Selene Willis - Edison International - Southern California Edison Company - 5	
Answer	No
Document Name	
Comment	
See comments submitted by the Edison Eclectic Institute	
Likes 0	
Dislikes 0	
Response	
Denise Sanchez - Denise Sanchez On Behalf of: Diana Torres, Imperial Irrigation District, 1, 6, 5, 3; George Kirschner, Imperial Irrigation District, 1, 6, 5, 3; Jesus Sammy Alcaraz, Imperial Irrigation District, 1, 6, 5, 3; Tino Zaragoza, Imperial Irrigation District, 1, 6, 5, 3; - Denise Sanchez	
Answer	No
Document Name	
Comment	

IID disagrees with the language in Requirement R5 due to its lack of clear objectives or defined outcomes for implementation. The Requirement does not explicitly state the intended outcomes of the risk assessment nor clarify its purpose. It should be revised to address these aspects.

Likes 0	
Dislikes 0	

Response

James Baldwin - James Baldwin On Behalf of: Matt Lewis, Lower Colorado River Authority, 5, 1; - James Baldwin

Answer	No
Document Name	

Comment

Under the Requirement, as currently written, it is unclear if the intent of R5.1 is to enable Registered Entities to maintain critical stations from previous 36-month assessments or if once a station is deemed critical during this year's study the additional studies in R3 are no longer necessary. R5 does not seem to address the next steps required after a proximity station not owned by a Registered Entity is identified as critical.

Likes 0	
Dislikes 0	

Response

Stephen Stafford - Stephen Stafford On Behalf of: Greg Davis, Georgia Transmission Corporation, 1; - Stephen Stafford

Answer	No
Document Name	

Comment

R5 requires a risk assessment without explicitly stating what the risk assessment is supposed to achieve. This lack of clarity is the only reason that a third-party verification of the assessment is needed. GTC suggests R5 be revised to clearly state the objective of the assessment, including the types of attacks to be simulated and acceptable resulting system response. Additionally, the reference to R3 is problematic as the TO is not equipped to perform the analysis prescribed in that requirement. This reference should be to a study/evaluation received from the appropriate planning entity.

Likes 0	
Dislikes 0	

Response

Kristine Martz - Edison Electric Institute - NA - Not Applicable - NA - Not Applicable

Answer	No
Document Name	

Comment	
EEI proposes the following revision to Requirement R5 because R1 is the only requirement that speaks directly to applicability: Each Transmission Owner shall conduct a risk assessment, using the methodology established in Requirement R3, on each Transmission station(s) and Transmission substation(s) identified as applicable in accordance with Requirement R1 at least once every 36 calendar months. **Jointly owned Transmission station(s) and Transmission substation(s) identified as applicable in Requirement R1 shall be evaluated as coordinated in Requirement R4.**	
Likes 0	
Dislikes 0	
Response	
David Jendras Sr - Ameren - Ameren Services - 3	
Answer	No
Document Name	
Comment	
Ameren supports EEI's comments on this project.	
Likes 0	
Dislikes 0	
Response	
Hillary Creurer - Allete - Minnesota Power, Inc. - 1	
Answer	No
Document Name	
Comment	
Minnesota Power supports MRO-NSRF and EEI's comments.	
Likes 0	
Dislikes 0	
Response	
Andy Fuhrman - Andy Fuhrman On Behalf of: Theresa Allard, Minnkota Power Cooperative Inc., 1; - Andy Fuhrman	
Answer	No

Document Name	

Comment

MPC disagrees with the use of a 36 month timeframe for utilities who have not previously identified any substations as critical as it is both outside the scope of the SAR and will lead to increased study costs with little or no benefit. During the 6/7/24 NERC webinar for the SAR, the SDT stated a goal of changing the risk assessment timeframe to 36 months was to align the risk assessment with the model build time frame of another standard. This goal is outside the scope of the SAR and otherwise irrelevant as the CIP-014 risk assessment does not require the use of models built for any other standard.

Considering the very slow pace of construction of new electrical infrastructure, it is highly unlikely that a modification to an existing non-critical station or substation that would result in the station or substation becoming critical would be planned, designed, and constructed within 36 months. It is equally unlikely that a newly constructed CIP-014 critical substation would be completed within this timeframe. As stations and substations planned to be in service within 24 months of the risk assessment are already required to be included under R1 of CIP-014-3, changing the risk assessment timeframe from 60 months to 36 months is very unlikely to identify stations or substations that would not be identified under CIP-014-3.

For utilities who have not identified previously identified substations as critical, moving the risk assessment timeframe to 36 months will result in increased costs due to more frequent risk assessments, with the more frequent assessments having no benefit as they have little to no chance of identifying stations or substations as CIP-014 critical that would not already have been under CIP-014-3.

Likes 0	
Dislikes 0	

Response

Fon Hiew - NB Power Corporation - New Brunswick Power Transmission Corporation - 5

Answer	No
Document Name	

Comment

We suggest tightening the language of Part 5.2 dealing with proximity and ability of a TO ability to designate a Control Center with other TO or TOPs.

We suggest added language about information security between entities where a TO designate another entities Control Center in part 5.2.

A Requirement R5.3 should be added stating something similar to “Transmission Owners of stations within proximity of other Transmission Owners as determined in R2 should share the results of their analyses related to the stations within proximity with all the other Transmission Owners of the stations within proximity."

Likes 0	
Dislikes 0	

Response

Chantal Mazza - Chantal Mazza On Behalf of: Junji Yamaguchi, Hydro-Quebec (HQ), 1, 5; Nicolas Turcotte, Hydro-Quebec (HQ), 1, 5; - Chantal Mazza

Answer	No

Document Name	
Comment	

We suggest tightening the language of Part 5.2 dealing with proximity and ability of a TO ability to designate a Control Center with other TO or TOPs.

We suggest added language about information security between entities where a TO designate another entities Control Center in part 5.2.

A Requirement R5.3 should be added stating something similar to “Transmission Owners of stations within proximity of other Transmission Owners as determined in R2 should share the results of their analyses related to the stations within proximity with all the other Transmission Owners of the stations within proximity."

Likes 0	
Dislikes 0	
Response	

Jeffrey Streifling - NB Power Corporation - 1

Answer	No
Document Name	
Comment	

We suggest tightening the language of Part 5.2 dealing with proximity and ability of a TO ability to designate a Control Center with other TO or TOPs.
We suggest added language about information security between entities where a TO designate another entities Control Center in part 5.2.
A Requirement R5.3 should be added stating something similar to “Transmission Owners of stations within proximity of other Transmission Owners as determined in R2 should share the results of their analyses related to the stations within proximity with all the other Transmission Owners of the stations within proximity."

Likes 0	
Dislikes 0	
Response	

Dave Krueger - SERC Reliability Corporation - 10

Answer	No
Document Name	
Comment	

Item #5.A: In R5, the requirement language mentions “…on each transmission station(s) and Transmission substations…”. The word “each” is unclear if this is meant to also refer to substation proximity groups from R2/R3.5 as well as individual substations. Clarity in this linking language could provide clarity.

Item #5.B: In R5.1, the term “critical” is used for the first time. Is the implication that applicable Transmission Stations/Substations (or entire proximity groups) that ‘fail’ the R5 risk assessment are then formally called “critical”? Language indicating that in R5 (root) would be helpful, as R5.1 reads more as an exclusion. The language would likely need to be made consistent in other parts of the standard, such as R6.3, R8, R9, etc.

Item #5.C: In R5.1, in one case the requirement states, “identified as critical” and another states “classified as critical”. Are these different states, or could the verbs be standardized?

Item #5.D: In R5.2, the phrase “primary control center” does not utilize the NERC defined term ‘Control Center’. The Control Center term from the 706SDT had not reached its Effective Date at the time the original CIP-014-1 reached its compliance date, however moving to the standardized term now would reduce confusion and divergence between CIP-014 and the remainder of the CIP standards, especially as future standards projects occur. We do agree with retaining the qualifier of “…that operationally controls…” to delineate between primary and cold backup sites.

Item #5.E: In 5.2, the requirement does not acknowledge the situation where multiple control centers owned by different Responsible Entities (such as those with joint ownership as described in R4) may control some, but not all, of the Transmission Elements in a Transmission station/substation. There also exists the reality where some TO/TOPs may operate multiple ‘hot-hot’ Control Centers that are both constantly staffed and are able to immediately operationally control Transmission Elements. Suggest the term read “…primary control center(s)…” or “…primary Control Center(s)…” to affirm that all control centers with operational control need to be identified and allow flexibility for different types of Control Center configurations and joint ownership and operation of Elements.

Item #5.F: In M5 (the measures for R5) suggest a clarification the that “..dated written or electronic documentation of the risk assessment satisfying Requirement R5 for **each** Transmission station and Transmission substation…” to clarify the level of detail needed, instead of an high-level executive summary of its performance.

Likes 0	
Dislikes 0	

Response

Teresa Krabe - Lower Colorado River Authority - 5

Answer	No
Document Name	

Comment

Under the Requirement, as currently written, it is unclear if the intent of R5.1 is to enable Registered Entities to maintain critical stations from previous 36-month assessments or if once a station is deemed critical during this year’s study the additional studies in R3 are no longer necessary. R5 does not seem to address the next steps required after a proximity station not owned by a Registered Entity is identified as critical.

Likes 0	
Dislikes 0	

Response

Israel Perez - Israel Perez On Behalf of: Laura Somak, Salt River Project, 3, 6, 5, 1; Mathew Weber, Salt River Project, 3, 6, 5, 1; Thomas Johnson, Salt River Project, 3, 6, 5, 1; Timothy Singh, Salt River Project, 3, 6, 5, 1; - Israel Perez

Answer	No

Document Name	
Comment	
SRP supports the MRO NSRF with Tacoma Power’s comments.	
Likes 0	
Dislikes 0	
Response	
Devin Shines - PPL - Louisville Gas and Electric Co. - 1,3,5,6 - SERC,RF	
Answer	No
Document Name	
Comment	
Louisville Gas & Electric and Kentucky Utilities support EEI's comments.	
Likes 0	
Dislikes 0	
Response	
John Pearson - ISO New England, Inc. - 2	
Answer	No
Document Name	
Comment	
Does R5.1 mean that once a station or substation becomes critical, then it is forever critical? This seems arbitrary since there is no requirement to retest critical stations. Over time and with system topology changes, stations may no longer be critical and provisions should be made to perform periodic reviews to determine if they remain CIP-014 critical.	
Likes 0	
Dislikes 0	
Response	
Sean Bodkin - Dominion - Dominion Resources, Inc. - 6, Group Name Dominion	
Answer	No
Document Name	

Comment	
Dominion Energy supports EEI comments.	
Likes 0	
Dislikes 0	
Response	
Ellese Murphy - Duke Energy - 1,3,5,6 - Texas RE,SERC,RF	
Answer	No
Document Name	
Comment	
We recommend that the Drafting Team clarify applicability in R5. Are R3.2.2 and R5.1 redundant to each other?	
Likes 0	
Dislikes 0	
Response	
Rachel Schuldt - Black Hills Corporation - 6, Group Name Black Hills Corporation - All Segments	
Answer	No
Document Name	
Comment	
Black Hills Corporation agrees with EEI comments that the proposed modification to Requirement R5, have the references to R2 and R4 removed from R5, as only Requirement R1 sets the applicable station(s) or substation(s).	
Likes 0	
Dislikes 0	
Response	
Tim Kelley - Tim Kelley On Behalf of: Charles Norton, Sacramento Municipal Utility District, 3, 6, 4, 1, 5; Foung Mua, Sacramento Municipal Utility District, 3, 6, 4, 1, 5; Kevin Smith, Balancing Authority of Northern California, 1; Nicole Looney, Sacramento Municipal Utility District, 3, 6, 4, 1, 5; Ryder Couch, Sacramento Municipal Utility District, 3, 6, 4, 1, 5; Wei Shao, Sacramento Municipal Utility District, 3, 6, 4, 1, 5; - Tim Kelley, Group Name SMUD and BANC	
Answer	No
Document Name	

Comment
Requirement R5 does not specify what outcome the risk assessment is trying to achieve. The Standards Drafting Team should revise the language to ensure the risk assessment identifies which Transmission station(s) and Transmission substation(s) are “critical” and provide parameters for what “critical” means. As currently written, Requirement R5 has the Transmission Owner identify the primary control center that operationally controls each Transmission station or Transmission substation classified as critical, however, the identification of the “critical” Transmission station(s) or Transmission substation(s) is missing. We recommend that the Standards Drafting Team revise Requirement R5 to clarify that the outcome of the risk assessment is the identification of the “critical” Transmission station(s) or Transmission substation(s). To accomplish this, we propose the following language for Requirement R5: “Each Transmission Owner shall conduct a risk assessment, using the methodology established in Requirement R3, on each Transmission station(s) and Transmission substation(s) identified as applicable in accordance with Requirements R1, R2, and R4 at least once every 36 calendar months **to identify the Transmission station(s) and Transmission substation(s) that if rendered inoperable or damaged could result in instability, uncontrolled separation, or Cascading within an Interconnection**”. No changes are necessary for sub-requirements R5.1 and R5.2.

Likes 0	
Dislikes 0	

Response

Donna Wood - Tri-State G and T Association, Inc. - 1	
Answer	No
Document Name	

Comment
Tri-State agrees with the MRO NSRF Submitted Comments

Likes 0	
Dislikes 0	

Response

Richard Vendetti - NextEra Energy - 5	
Answer	No
Document Name	

Comment
NEE support’s EEI comments: “EEI proposes the following revision to Requirement R5 because R1 is the only requirement that speaks directly to applicability:

Each Transmission Owner shall conduct a risk assessment, using the methodology established in Requirement R3, on each Transmission station(s) and Transmission substation(s) identified as applicable in accordance with Requirements R1, R2, and R4 at least once every 36 calendar months. **Jointly owned Transmission station(s) and Transmission substation(s) identified as applicable in Requirement R1 shall be evaluated as coordinated in Requirement R4.** “

Likes 0	
Dislikes 0	

Response

Jennifer Bray - Arizona Electric Power Cooperative, Inc. - 1

Answer	No
Document Name	

Comment

AEPC signed on to ACES comments below:

The current draft, R5 requires a risk assessment without explicitly stating what the risk assessment is supposed to achieve. ACES suggests clarifying language to have a clear objective outcome based on the assessment.

Likes 0	
Dislikes 0	

Response

Anne Kronshage - Public Utility District No. 1 of Chelan County - 6, Group Name Public Utility District No. 1 of Chelan County - Voting Group

Answer	No
Document Name	

Comment

Modifying the study periodicity requirement from 60-months (CIP-014-3) to 36-months (CIP-014-4) increases consumption of resources for utilities that do not own any applicable stations that, if rendered damaged or inoperable as a result of a physical attack, result in instability, uncontrolled islanding, or Cascading. The updates to CIP-014-4 R1 requiring TOPs to establish and a maintain a list every 36-months can help address the issues identified in the SAR but requiring all TOPs to conduct an assessment every 36 months increases burden on utilities that have previously only been required to perform CIP-014 studies in alignment with the 60-month requirement. However, if R1 could include the new 36-month list maintenance periodicity while R5 maintains the existing CIP-014-3 60 calendar month periodicity for utilities that demonstrate through their completed CIP-014 risk assessments that they do not own these impactful facilities, then the proposed updates to R1 and R5 support NERC goals to address issues identified in the SAR without causing additional burden.

Additionally, as noted in prior comments, R5’s assessment does not allow for/contemplate how utilities may change / remediate performance deficiencies to not cause cascading, instability, or uncontrolled separation. This is a more positive outcome for the system than a tall fence and a big gate, to which an attacker may simply move to the 1st transmission structures outside the station and cause the same level of damage, with the added station protections under CIP-014 for naught.

Likes 0	
Dislikes 0	
Response	
Diana Aguas - CenterPoint Energy Houston Electric, LLC - 1 - Texas RE	
Answer	No
Document Name	
Comment	
CenterPoint Energy Houston Electric, LLC agrees with the 36-calendar month time frame, but does not agree with R3 details as written, due to the reasons mentioned in Question 4	
Likes 0	
Dislikes 0	
Response	
Michael Dillard - Austin Energy - 5, Group Name Austin Energy	
Answer	No
Document Name	
Comment	
Austin Energy supports MRO's comments. Attached in Question 1.	
Likes 0	
Dislikes 0	
Response	
TRACEY JOHNSON - Southern Indiana Gas and Electric Co. - 3,5,6 - RF	
Answer	No
Document Name	
Comment	
Southern Indiana Gas and Electric d/b/a CenterPoint Energy Indiana South (SIGE) agrees with the 36-calendar month time frame, but does not agree with R3 details as written, due to the reasons mentioned in Question 4.	
Likes 0	

Dislikes 0	
Response	
Ben Hammer - Western Area Power Administration - 1	
Answer	No
Document Name	
Comment	
WAPA concurs with the comments provided by the MRO NSRF.	
Likes 0	
Dislikes 0	
Response	
Karen Demos - NextEra Energy - Florida Power and Light Co. - 3	
Answer	No
Document Name	
Comment	
NextEra/FPL supports EEI's comments	
Likes 0	
Dislikes 0	
Response	
Cain Braveheart - Bonneville Power Administration - 1,3,5,6 - WECC	
Answer	No
Document Name	
Comment	
BPA agrees with conducting risk assessments every 36 months for Transmission station(s) or Transmission substation(s) identified as applicable. BPA does not agree with requiring subsequent risk assessment(s) if they continue to be classified as critical.	
Likes 0	
Dislikes 0	
Response	

Leshel Hutchings - AEP - 3	
Answer	No
Document Name	
Comment	

R5 Section 5.1

5.1 is duplicative with 3.2.2 – suggest removing 5.1 or at least one of them.

Likes 0	
Dislikes 0	
Response	

Alan Kloster - Alan Kloster On Behalf of: Jeremy Harris, Evergy, 3, 5, 1, 6; Kevin Frick, Evergy, 3, 5, 1, 6; Marcus Moor, Evergy, 3, 5, 1, 6; Tiffany Lake, Evergy, 3, 5, 1, 6; - Alan Kloster	
Answer	No
Document Name	
Comment	

Evergy supports and incorporates by reference the comments of the Edison Electric Insitute (EEI) and MRO NSRF for question #7.

Likes 0	
Dislikes 0	
Response	

Anna Martinson - MRO - 1,2,3,4,5,6 - MRO, Group Name MRO Group	
Answer	No
Document Name	
Comment	

As drafted, R5 requires a risk assessment without explicitly stating what the risk assessment is supposed to achieve. The MRO NSRF recommends adding language to clarify the objective or outcome of the risk assessment, “to identify the Transmission station(s) and Transmission substation(s) that if rendered inoperable or damaged though a realistic physical attack scenario could result in instability, uncontrolled separation, or Cascading within an Interconnection”.

Additionally, the SDT should clarify within R5.1 that an entity can deem one of its substations as critical and treat it as such without having to perform a risk assessment. This can either be a substation that had a previous risk assessment performed and does not require a subsequent (as 5.1 is currently

drafted), or a substation that the entity volunteers to treat a critical without any risk assessment. It sounds like the SDT had this intent in the draft, but the wording does not make this clear.

Likes 1	Lincoln Electric System, 1, Johnson Josh
Dislikes 0	

Response

Michele Shafer - New York State Electric & Gas (NYSEG) - 6

Answer	No
Document Name	

Comment

- R5 states facilities "…identified as applicable in accordance with Requirements R1, R2 and R4…" however, R4 does include information on applicability of facilities. Suggest that the final sentence of R5 be reworded:
  "Each Transmission Owner shall conduct a risk assessment, using the methodology established in Requirement R3, on each Transmission station(s) and Transmission substation(s) identified as applicable in accordance with Requirements R1, R2 **and the individual and joint responsibilities identified in R4**, at least once every 36 calendar months."

Likes 0	
Dislikes 0	

Response

Michele Tondalo - United Illuminating Co. - 1

Answer	No
Document Name	

Comment

Comment 26: R5 states facilities "…identified as applicable in accordance with Requirements R1, R2 and R4…" however, R4 does include information on applicability of facilities. Suggest that the final sentence of R5 be reworded:

"Each Transmission Owner shall conduct a risk assessment, using the methodology established in Requirement R3, on each Transmission station(s) and Transmission substation(s) identified as applicable in accordance with Requirements R1, R2 and the individual and joint responsibilities identified in R4, at least once every 36 calendar months."

Likes 0	
Dislikes 0	

Response

Lucinda Bradshaw - Oncor Electric Delivery - 1 - Texas RE

Answer	No
Document Name	
Comment	
See Oncor’s Comments in response to Question 2 above.	
Likes 0	
Dislikes 0	
Response	
Jennie Wike - Jennie Wike On Behalf of: John Merrell, Tacoma Public Utilities (Tacoma, WA), 1, 4, 5, 6, 3; - Jennie Wike, Group Name Tacoma Power	
Answer	No
Document Name	
Comment	
Tacoma Power supports the MRO NSRF comments, as follows. As drafted, R5 requires a risk assessment without explicitly stating what the risk assessment is supposed to achieve. The MRO NSRF recommends adding language to clarify the objective or outcome of the risk assessment, “to identify the Transmission station(s) and Transmission substation(s) that if rendered inoperable or damaged though a realistic physical attack scenario could result in instability, uncontrolled separation, or Cascading within an Interconnection”. Additionally, the SDT should clarify within R5.1 that an entity can deem one of its substations as critical and treat it as such without having to perform a risk assessment. This can either be a substation that had a previous risk assessment performed and does not require a subsequent (as 5.1 is currently drafted), or a substation that the entity volunteers to treat a critical without any risk assessment. It sounds like the SDT had this intent in the draft, but the wording does not make this clear.	
Likes 0	
Dislikes 0	
Response	
Kevin Conway - Western Power Pool - 4	
Answer	No
Document Name	
Comment	
The first concern is in R 5.2 where the Transmission Owner is responsible for the primary [C]control [C]enter identification. TOs do not operate control centers and have no authority to designate what their TOP choses to do. In smaller agencies there may be multiple primary Control Centers due the geographic operation of the entity. In the case of this requirement the use of “control center” in its non-capitalized form causes confusion which has	

been a problem for several Standard Drafting Teams. The Drafting Team should consider that every TO must provide a list of its critical facilities to the TOP. The TOP must declare the associated “Control Centers” critical if there are any identified critical facilities that it controls.

R 5 is appropriately requiring a review of the facilities every 36 months. R5.1 should be removed since it allows an entity to forego a reassessment of the facilities’ threats and vulnerabilities. These will change over time, and although a critical facility may remain classified as critical, the Risk Assessment may change and require additional, or different mitigation measures.

Likes 0	
Dislikes 0	

Response

Jessica Cordero - Unisource - Tucson Electric Power Co. - 1

Answer	No
Document Name	

Comment

Recommend removal of R5.1 entirely. Does not provide for de-classification of a Transmission Substation from critical to non-critical. Does not prevent a station from being studied once and never re-evaluated in subsequent risk assessments.

Likes 0	
Dislikes 0	

Response

Joshua London - Eversource Energy - 1, Group Name Eversource

Answer	No
Document Name	

Comment

Likes 0	
Dislikes 0	

Response

Steven Rueckert - Western Electricity Coordinating Council - 10, Group Name WECC Entity Monitoring

Answer	Yes
Document Name	

Comment

There is no context provided for determining what is “critical”. Should the context be “Those Transmission station(s) and Transmission substation(s) whose loss results in or that cause instability, uncontrolled separation or Cascading are considered critical”? Need to address use of “months” versus “calendar months”. Is R2 already subsumed by R1’s reference to using Attachment 1 which contains bullet 2.1? If considered added for clarity (which is appropriate) then the DT should consider similar language in R3. Capitalize “control center” as it is a defined term. Understood that the lower case term originated from FERC but FERC also lower cases functional entities. NERC Standards should be consistent. May also need to pluralize Control Center to avoid confusion.

Likes 0	
Dislikes 0	

Response

Robert Jones - Seattle City Light - 4

Answer	Yes
Document Name	

Comment

Language in 5.2 could use some work on clarity.

Likes 0	
Dislikes 0	

Response

Chris Shultz - Seattle City Light - 5

Answer	Yes
Document Name	

Comment

Language in 5.2 could use some work on clarity.

Likes 0	
Dislikes 0	

Response

Mark Flanary - Midwest Reliability Organization - 10

Answer	Yes
Document Name	

Comment
While it's implied by the order of the requirements, it could be clarified that R5 would be completed after R1-R4 to ensure the risk assessment is properly informed. Performing the Requirements out of order can create a situation where the risk assessment is not using information that accurately represents the current environment. Consider a timing component to the requirement, such as "Following completion of R1, R2, and R4, within # calendar months complete a risk assessment..."

Likes 0	
Dislikes 0	

Response

Mark Garza - FirstEnergy - FirstEnergy Corporation - 4, Group Name FE Voter

Answer	Yes
Document Name	

Comment
FirstEnergy has no objection.

Likes 0	
Dislikes 0	

Response

Jay Sethi - Manitoba Hydro - 1,3,5,6 - MRO, Group Name Manitoba Hydro Group

Answer	Yes
Document Name	

Comment
It is recommended that R5 also provides the flexibility to remove non-critical stations from subsequent risk assessments provided that TOs provide a technical justification.

Likes 0	
Dislikes 0	

Response

Rebika Yitna - Rebika Yitna On Behalf of: Roger Brand, MEAG Power, 3, 1; - Rebika Yitna

Answer	Yes
Document Name	

Comment	
Only if the language in R3 is updated to be less prescriptive.	
Likes 0	
Dislikes 0	
Response	
Chris Wagner - Santee Cooper - 1, Group Name Santee Cooper	
Answer	Yes
Document Name	
Comment	
Likes 0	
Dislikes 0	
Response	
Zenon O'young-Chu - Seattle City Light - 3	
Answer	Yes
Document Name	
Comment	
Likes 0	
Dislikes 0	
Response	
Daren Brubaker - Seattle City Light - 6	
Answer	Yes
Document Name	
Comment	
Likes 0	
Dislikes 0	

Response	
Carver Powers - Utility Services, Inc. - 4	
Answer	Yes
Document Name	
Comment	
Likes 0	
Dislikes 0	
Response	
Michael Jang - Seattle City Light - 1	
Answer	Yes
Document Name	
Comment	
Likes 0	
Dislikes 0	
Response	
Daniel Gacek - Exelon - 1, Group Name Exelon	
Answer	Yes
Document Name	
Comment	
Likes 0	
Dislikes 0	
Response	
Mike Magruder - Avista - Avista Corporation - 1,3,5	
Answer	Yes
Document Name	

Comment	
Likes 0	
Dislikes 0	
Response	
Rachel Coyne - Texas Reliability Entity, Inc. - 10	
Answer	Yes
Document Name	
Comment	
Likes 0	
Dislikes 0	
Response	
Andrew Smith - APS - Arizona Public Service Co. - 5	
Answer	Yes
Document Name	
Comment	
Likes 0	
Dislikes 0	
Response	
Brian Millard - Tennessee Valley Authority - 1,3,5,6 - SERC, Group Name TVA RBB	
Answer	Yes
Document Name	
Comment	
Likes 0	
Dislikes 0	
Response	

Tyler Schwendiman - ReliabilityFirst - 10	
Answer	Yes
Document Name	
Comment	
Likes 0	
Dislikes 0	
Response	
Alison Nickells - NiSource - Northern Indiana Public Service Co. - 1 - RF	
Answer	Yes
Document Name	
Comment	
Likes 0	
Dislikes 0	
Response	
Kelley Sargent - Puget Sound Energy, Inc. - 3	
Answer	Yes
Document Name	
Comment	
Likes 0	
Dislikes 0	
Response	
Matt Carden - Southern Company - Southern Company Services, Inc. - 1	
Answer	Yes
Document Name	
Comment	

Likes 0	
Dislikes 0	
Response	
Richard Jackson - U.S. Bureau of Reclamation - 1	
Answer	Yes
Document Name	
Comment	
Likes 0	
Dislikes 0	
Response	
James Keele - Entergy - 3	
Answer	Yes
Document Name	
Comment	
Likes 0	
Dislikes 0	
Response	
Robert Follini - Avista - Avista Corporation - 3	
Answer	Yes
Document Name	
Comment	
Likes 0	
Dislikes 0	
Response	

Jesus Sammy Alcaraz - Imperial Irrigation District - 1	
Answer	
Document Name	
Comment	
IID disagrees with the language in Requirement R5 due to its lack of clear objectives or defined outcomes for implementation. The Requirement does not explicitly state the intended outcomes of the risk assessment nor clarify its purpose. It should be revised to address these aspects.	
Likes 0	
Dislikes 0	
Response	

7. Do you agree with the Implementation Plan for CIP-014-4?	
Jessica Cordero - Unisource - Tucson Electric Power Co. - 1	
Answer	No
Document Name	
Comment	
Clearly define completion of initial CIP-014-4 Risk Assessment and transition from CIP-014-3. Initial CIP-014-4 Risk Assessment should be completed within 30 months of the previous CIP-014-3 Risk Assessment.	
Likes 0	
Dislikes 0	
Response	
Jay Sethi - Manitoba Hydro - 1,3,5,6 - MRO, Group Name Manitoba Hydro Group	
Answer	No
Document Name	
Comment	
Manitoba Hydro agrees with the content and timelines in the implementation plan however as written the standard would be difficult to implement effectivly in that timeline (please see previous comments).	
Likes 0	
Dislikes 0	
Response	
Michele Tondalo - United Illuminating Co. - 1	
Answer	No
Document Name	
Comment	
Comment 27: It is conceivable that an entity may have finished a CIP-014-3 study just prior to CIP-014-4 becoming effective. If the SDT believes that a CIP-014-4 study meets the requirements of CIP-014-4 it should be documented in the Implementation Plan to assist entities in that situation.	
Likes 0	
Dislikes 0	

Response

Michele Shafer - New York State Electric & Gas (NYSEG) - 6	
Answer	No
Document Name	
Comment	
• It is conceivable that an entity may have finished a CIP-014-3 study just prior to CIP-014-4 becoming effective. If the SDT believes that a *CIP-014-4* study meets the requirements of CIP-014-4 it should be documented in the Implementation Plan to assist entities in that situation.	
Likes 0	
Dislikes 0	

Response

Brian Millard - Tennessee Valley Authority - 1,3,5,6 - SERC, Group Name TVA RBB	
Answer	No
Document Name	
Comment	
TVA requests the implementation plan be moved from 24 to 36 months.	
Likes 0	
Dislikes 0	

Response

Alan Kloster - Alan Kloster On Behalf of: Jeremy Harris, Evergy, 3, 5, 1, 6; Kevin Frick, Evergy, 3, 5, 1, 6; Marcus Moor, Evergy, 3, 5, 1, 6; Tiffany Lake, Evergy, 3, 5, 1, 6; - Alan Kloster	
Answer	No
Document Name	
Comment	
Evergy supports and incorporates by reference the comments of the Edison Electric Insitute (EEI) for question #7.	
Likes 0	
Dislikes 0	

Response

Leshel Hutchings - AEP - 3	
Answer	No
Document Name	
Comment	

The implementation plan is 24 months, and the compliance timeline is 36 months. The implementation plan should be 36 months, no shorter.

The proposed implementation plan is 24 months. This means some Transmission Owners may have insufficient time, less than 36 months, to complete their next assessment based on the new standard. Example: a TO with an existing compliance deadline at the end of this year may fall under the shortened timeline. For large TOs, the existing applicability scoring, case prep, steady state and stability analysis, and third-party review can take as long as 1 year to perform per region. AEP has three regions (PJM, SPP, and ERCOT), which each take this amount of time. With the proposed proximity/applicability changes, scenario changes, and this implementation period would be insufficient time to adopt and reperform the assessment. In addition, given the new proximity criteria some small TOs may not have had any applicable stations previously and will have to create a new methodology and perform the assessment from scratch within that short 24-month period.

Likes 0	
Dislikes 0	
Response	

Cain Braveheart - Bonneville Power Administration - 1,3,5,6 - WECC	
Answer	No
Document Name	
Comment	

The current cycle for CIP-014-3 R1 is 30 months. BPA believes requiring a fixed mandatory enforcement date may not align with entities' assessment schedules. BPA seeks clarity regarding how the SDT believes entities will demonstrate compliance with CIP-014-3 R1, then a new mid-cycle R1 assessment for CIP-014-4 R1.

Likes 0	
Dislikes 0	
Response	

Karen Demos - NextEra Energy - Florida Power and Light Co. - 3	
Answer	No
Document Name	
Comment	

NextEra/FPL supports EEI's comments

Likes 0	
Dislikes 0	
Response	
Rachel Schuldt - Black Hills Corporation - 6, Group Name Black Hills Corporation - All Segments	
Answer	No
Document Name	
Comment	
Black Hills Corporation agrees with EEI comments on the clarification of the Implementation Plan for CIP-014-4.	
Likes 0	
Dislikes 0	
Response	
Ellese Murphy - Duke Energy - 1,3,5,6 - Texas RE,SERC,RF	
Answer	No
Document Name	
Comment	
Duke Energy support EEI comments on the implementation plan.	
Likes 0	
Dislikes 0	
Response	
Israel Perez - Israel Perez On Behalf of: Laura Somak, Salt River Project, 3, 6, 5, 1; Mathew Weber, Salt River Project, 3, 6, 5, 1; Thomas Johnson, Salt River Project, 3, 6, 5, 1; Timothy Singh, Salt River Project, 3, 6, 5, 1; - Israel Perez	
Answer	No
Document Name	
Comment	
SRP supports the MRO NSRF with Tacoma Power’s comments.	
Likes 0	
Dislikes 0	

Response

Teresa Krabe - Lower Colorado River Authority - 5	
Answer	No
Document Name	
Comment	
LCRA would like the Implementation Plan to include language addressing early adoption.	
Likes 0	
Dislikes 0	

Response

Dave Krueger - SERC Reliability Corporation - 10	
Answer	No
Document Name	
Comment	

Thank you for the chance to comment, SERC appreciates the complexity of the SDT's task of modifying multiple parts of such a high-profile and high-priority standard.

· Item #Implement.A: Given the long timelines and consideration of substations or Transmission elements to be constructed in the future, the Implementation plan should explicitly provide more detailed examples to cover scenarios such as the identification of a station being put in service within the next 36 months, responsibilities for newly registered entities, what constitutes an "unplanned change"', etc. These are common questions received given the longer time horizons of the new R1-R5, especially since CIP-014 is not dependent on CIP-002-5.1a R1/R2 for initiation/identification/classification. By providing concrete written examples in the Implementation Plan now (instead of in future Implementation Guidance), clarity on these situations would also address the SAR's Detailed Description #2, *"…Revisions to the risk assessment should be made to only include transmission and generation projects that are appropriate to the periodicity of the entity's risk assessments. Determinations of appropriateness should be clarified to align study periods, frequency of studies, and the power flow models used."*

Likes 0	
Dislikes 0	

Response

Rachel Coyne - Texas Reliability Entity, Inc. - 10	
Answer	No
Document Name	
Comment	

Requirement Part 1.2 states that a review of the list of applicable Transmission station(s) and Transmission substation(s) shall be done every 36 months. Absent a specified initial performance date in the implementation plan, the Transmission Owner would have until 36 months after the effective to establish its first list of Transmission station(s) and Transmission substation(s). Texas RE recommends the implementation plan specify the list shall be established by the effective date of the standard to avoid delaying compliance obligations an additional 36 months.

Likes 0	
Dislikes 0	

Response

Hillary Creurer - Allete - Minnesota Power, Inc. - 1

Answer	No
Document Name	

Comment

Minnesota Power supports EEI's comments.

Likes 0	
Dislikes 0	

Response

Stephen Stafford - Stephen Stafford On Behalf of: Greg Davis, Georgia Transmission Corporation, 1; - Stephen Stafford

Answer	No
Document Name	

Comment

The construct of requiring the TO to perform analysis under R3 needs to be removed from this standard and addressed in TPL space. The 24 month implementation included in this plan is not sufficient to accomplish this.

Likes 0	
Dislikes 0	

Response

James Baldwin - James Baldwin On Behalf of: Matt Lewis, Lower Colorado River Authority, 5, 1; - James Baldwin

Answer	No
Document Name	

Comment

LCRA would like the Implementation Plan to include language addressing early adoption.	
Likes 0	
Dislikes 0	
Response	
Selene Willis - Edison International - Southern California Edison Company - 5	
Answer	No
Document Name	
Comment	
See comments submitted by the Edison Eclectic Institute	
Likes 0	
Dislikes 0	
Response	
Dwanique Spiller - Berkshire Hathaway - NV Energy - 5	
Answer	No
Document Name	
Comment	
NV Energy supports the EEI response to this question. Additionally, the increased complexity of the standard will require entities to create new definitions and measurements for the new standard language in addition to implementing the practical ramifications of new study measurements. Current language also is suggestive of prior physical security assessments conducted with existing R4 and R5 standards may also need to be considered as data points in the CIP-014-4 R2 assessment requiring an amalgamation of transmission planning and physical security data to determine risk to the technical functionality and stability of substation equipment. The time necessary to implement is difficult to forecast at this juncture due to the potential for significant change.	
Likes 0	
Dislikes 0	
Response	
Amy Wesselkamper - PNM Resources - Public Service Company of New Mexico - 3	
Answer	No
Document Name	

Comment	
PNM and TNMP propose 36 calendar months from date of last assessment performed under CIP-014-3 R1 or 24 calendar months of the effective date whichever is longer.	
Likes 0	
Dislikes 0	
Response	
Jason Snodgrass - Jason Snodgrass On Behalf of: Katrina Lyons, Georgia System Operations Corporation, 3, 4; - Jason Snodgrass	
Answer	No
Document Name	
Comment	
GSOC supports comments provided by Georgia Transmission	
Likes 0	
Dislikes 0	
Response	
Mark Garza - FirstEnergy - FirstEnergy Corporation - 4, Group Name FE Voter	
Answer	Yes
Document Name	
Comment	
FirstEnergy has no objection to the Implementation Plan.	
Likes 0	
Dislikes 0	
Response	
Michael Dillard - Austin Energy - 5, Group Name Austin Energy	
Answer	Yes
Document Name	
Comment	

Austin Energy supports MRO's comments. Attached in Question 1.

Likes 0	
Dislikes 0	

Response

Mark Flanary - Midwest Reliability Organization - 10

Answer	Yes
Document Name	

Comment

The current Standard, CIP-014-4, Requirement 1, requires the risk performance to occur either every 30 or 60 calendar months. When the new Standard becomes effective Entities will be at different points in their cycles which could cause conflict or confusion. Consider providing guidance regarding how to handle situations where Entities are performing studies sufficiently out of cycle that a gap would be created, especially those Entities that are currently only required to perform the study every 60 months, or possibly providing an early adoption option.

Likes 0	
Dislikes 0	

Response

Kristine Martz - Edison Electric Institute - NA - Not Applicable - NA - Not Applicable

Answer	Yes
Document Name	

Comment

EEI supports a 24-calendar month implementation period but asks the drafting team to consider adding clarifying language to the implementation plan related to the implementation of periodic requirements. EEI interprets the draft Implementation Plan to mean that entities who must perform a risk assessment according to the requirements and timeframes in the currently enforceable CIP-014-3 after CIP-014-4 is approved but before the end of the 24-calendar month implementation period concludes, can perform the risk assessment under either version of the Standard. Subsequent risk assessments conducted after the end of the 24-calendar month implementation period would have to be performed in compliance with CIP-014-4. This is the preferred interpretation of the draft Implementation Plan, please add clarifying language to support this interpretation.

Likes 0	
Dislikes 0	

Response

Daniel Gacek - Exelon - 1, Group Name Exelon

Answer	Yes
Document Name	
Comment	
Exelon support the EEI comment to clarify the latitude for entities to perform assessments based on CIP-014-3 during the implementation period.	
Likes 0	
Dislikes 0	
Response	
Steven Rueckert - Western Electricity Coordinating Council - 10, Group Name WECC Entity Monitoring	
Answer	Yes
Document Name	
Comment	
Drawing a timeline for Implementation dates and ensuring future applicability is stated (Performance expectations) would benefit all implementation plans. The DT needs to consider “new” ownership (both new TOs or TOs subsumed by other existing TOs).	
Likes 0	
Dislikes 0	
Response	
Robert Follini - Avista - Avista Corporation - 3	
Answer	Yes
Document Name	
Comment	
Likes 0	
Dislikes 0	
Response	
James Keele - Entergy - 3	
Answer	Yes
Document Name	

Comment	
Likes 0	
Dislikes 0	
Response	
Richard Jackson - U.S. Bureau of Reclamation - 1	
Answer	Yes
Document Name	
Comment	
Likes 0	
Dislikes 0	
Response	
Matt Carden - Southern Company - Southern Company Services, Inc. - 1	
Answer	Yes
Document Name	
Comment	
Likes 0	
Dislikes 0	
Response	
Kevin Conway - Western Power Pool - 4	
Answer	Yes
Document Name	
Comment	
Likes 0	
Dislikes 0	
Response	

Jennie Wike - Jennie Wike On Behalf of: John Merrell, Tacoma Public Utilities (Tacoma, WA), 1, 4, 5, 6, 3; - Jennie Wike, Group Name Tacoma Power	
Answer	Yes
Document Name	
Comment	
Likes 0	
Dislikes 0	
Response	
Rebika Yitna - Rebika Yitna On Behalf of: Roger Brand, MEAG Power, 3, 1; - Rebika Yitna	
Answer	Yes
Document Name	
Comment	
Likes 0	
Dislikes 0	
Response	
Kelley Sargent - Puget Sound Energy, Inc. - 3	
Answer	Yes
Document Name	
Comment	
Likes 0	
Dislikes 0	
Response	
Lucinda Bradshaw - Oncor Electric Delivery - 1 - Texas RE	
Answer	Yes
Document Name	

Comment	
Likes 0	
Dislikes 0	
Response	
Alison Nickells - NiSource - Northern Indiana Public Service Co. - 1 - RF	
Answer	Yes
Document Name	
Comment	
Likes 0	
Dislikes 0	
Response	
Tyler Schwendiman - ReliabilityFirst - 10	
Answer	Yes
Document Name	
Comment	
Likes 0	
Dislikes 0	
Response	
Anna Martinson - MRO - 1,2,3,4,5,6 - MRO, Group Name MRO Group	
Answer	Yes
Document Name	
Comment	
Likes 1	Lincoln Electric System, 1, Johnson Josh
Dislikes 0	
Response	

Ben Hammer - Western Area Power Administration - 1	
Answer	Yes
Document Name	
Comment	
Likes 0	
Dislikes 0	
Response	
TRACEY JOHNSON - Southern Indiana Gas and Electric Co. - 3,5,6 - RF	
Answer	Yes
Document Name	
Comment	
Likes 0	
Dislikes 0	
Response	
Diana Aguas - CenterPoint Energy Houston Electric, LLC - 1 - Texas RE	
Answer	Yes
Document Name	
Comment	
Likes 0	
Dislikes 0	
Response	
Anne Kronshage - Public Utility District No. 1 of Chelan County - 6, Group Name Public Utility District No. 1 of Chelan County - Voting Group	
Answer	Yes
Document Name	
Comment	

Likes 0	
Dislikes 0	
Response	
Jennifer Bray - Arizona Electric Power Cooperative, Inc. - 1	
Answer	Yes
Document Name	
Comment	
Likes 0	
Dislikes 0	
Response	
Donna Wood - Tri-State G and T Association, Inc. - 1	
Answer	Yes
Document Name	
Comment	
Likes 0	
Dislikes 0	
Response	
Tim Kelley - Tim Kelley On Behalf of: Charles Norton, Sacramento Municipal Utility District, 3, 6, 4, 1, 5; Foung Mua, Sacramento Municipal Utility District, 3, 6, 4, 1, 5; Kevin Smith, Balancing Authority of Northern California, 1; Nicole Looney, Sacramento Municipal Utility District, 3, 6, 4, 1, 5; Ryder Couch, Sacramento Municipal Utility District, 3, 6, 4, 1, 5; Wei Shao, Sacramento Municipal Utility District, 3, 6, 4, 1, 5; - Tim Kelley, Group Name SMUD and BANC	
Answer	Yes
Document Name	
Comment	
Likes 0	
Dislikes 0	

Response	
Sean Bodkin - Dominion - Dominion Resources, Inc. - 6, Group Name Dominion	
Answer	Yes
Document Name	
Comment	
Likes 0	
Dislikes 0	
Response	
John Pearson - ISO New England, Inc. - 2	
Answer	Yes
Document Name	
Comment	
Likes 0	
Dislikes 0	
Response	
Andrew Smith - APS - Arizona Public Service Co. - 5	
Answer	Yes
Document Name	
Comment	
Likes 0	
Dislikes 0	
Response	
Jeffrey Streifling - NB Power Corporation - 1	
Answer	Yes
Document Name	

Comment	
Likes 0	
Dislikes 0	
Response	
Chantal Mazza - Chantal Mazza On Behalf of: Junji Yamaguchi, Hydro-Quebec (HQ), 1, 5; Nicolas Turcotte, Hydro-Quebec (HQ), 1, 5; - Chantal Mazza	
Answer	Yes
Document Name	
Comment	
Likes 0	
Dislikes 0	
Response	
Fon Hiew - NB Power Corporation - New Brunswick Power Transmission Corporation - 5	
Answer	Yes
Document Name	
Comment	
Likes 0	
Dislikes 0	
Response	
Andy Fuhrman - Andy Fuhrman On Behalf of: Theresa Allard, Minnkota Power Cooperative Inc., 1; - Andy Fuhrman	
Answer	Yes
Document Name	
Comment	
Likes 0	
Dislikes 0	

Response	
Denise Sanchez - Denise Sanchez On Behalf of: Diana Torres, Imperial Irrigation District, 1, 6, 5, 3; George Kirschner, Imperial Irrigation District, 1, 6, 5, 3; Jesus Sammy Alcaraz, Imperial Irrigation District, 1, 6, 5, 3; Tino Zaragoza, Imperial Irrigation District, 1, 6, 5, 3; - Denise Sanchez	
Answer	Yes
Document Name	
Comment	
Likes 0	
Dislikes 0	

Response	
Jesus Sammy Alcaraz - Imperial Irrigation District - 1	
Answer	Yes
Document Name	
Comment	
Likes 0	
Dislikes 0	

Response	
Ruida Shu - Northeast Power Coordinating Council - 1,2,3,4,5,6,7,8,9,10 - NPCC, Group Name NPCC RSC	
Answer	Yes
Document Name	
Comment	
Likes 0	
Dislikes 0	

Response	
Mike Magruder - Avista - Avista Corporation - 1,3,5	
Answer	Yes

Document Name	
Comment	
Likes 0	
Dislikes 0	
Response	
Michael Jang - Seattle City Light - 1	
Answer	Yes
Document Name	
Comment	
Likes 0	
Dislikes 0	
Response	
Chris Shultz - Seattle City Light - 5	
Answer	Yes
Document Name	
Comment	
Likes 0	
Dislikes 0	
Response	
Carver Powers - Utility Services, Inc. - 4	
Answer	Yes
Document Name	
Comment	
Likes 0	
Dislikes 0	

Response	
Robert Jones - Seattle City Light - 4	
Answer	Yes
Document Name	
Comment	
Likes 0	
Dislikes 0	
Response	
Daren Brubaker - Seattle City Light - 6	
Answer	Yes
Document Name	
Comment	
Likes 0	
Dislikes 0	
Response	
Zenon O'young-Chu - Seattle City Light - 3	
Answer	Yes
Document Name	
Comment	
Likes 0	
Dislikes 0	
Response	
Chris Wagner - Santee Cooper - 1, Group Name Santee Cooper	
Answer	Yes
Document Name	

Comment	
Likes 0	
Dislikes 0	
Response	
Jodirah Green - ACES Power Marketing - 1,3,4,5,6 - MRO,WECC,Texas RE,SERC,RF, Group Name ACES Collaborators	
Answer	Yes
Document Name	
Comment	
Likes 0	
Dislikes 0	
Response	
Richard Vendetti - NextEra Energy - 5	
Answer	
Document Name	
Comment	
NEE support's EEI comments: "EEI supports a 24-calendar month implementation period but asks the drafting team to consider adding clarifying language to the implementation plan related to the implementation of periodic requirements. EEI interprets the draft Implementation Plan to mean that entities who must perform a risk assessment according to the requirements and timeframes in the currently enforceable CIP-014-3 after CIP-014-4 is approved but before the end of the 24-calendar month implementation period concludes, can perform the risk assessment under either version of the Standard. Subsequent risk assessments conducted after the end of the 24-calendar month implementation period would have to be performed in compliance with CIP-014-4. This is the preferred interpretation of the draft Implementation Plan, please add clarifying language to support this interpretation. "	
Likes 0	
Dislikes 0	
Response	
Devin Shines - PPL - Louisville Gas and Electric Co. - 1,3,5,6 - SERC,RF	
Answer	
Document Name	

Comment	
Louisville Gas & Electric and Kentucky Utilities support EEI's comments.	
Likes 0	
Dislikes 0	
Response	
David Jendras Sr - Ameren - Ameren Services - 3	
Answer	
Document Name	
Comment	
Ameren supports EEI's comments on this project.	
Likes 0	
Dislikes 0	
Response	
Stephanie Kenny - Edison International - Southern California Edison Company - 6	
Answer	
Document Name	
Comment	
See EEI comments	
Likes 0	
Dislikes 0	
Response	
Gail Elliott - Gail Elliott On Behalf of: Michael Moltane, International Transmission Company Holdings Corporation, 1; - Gail Elliott	
Answer	
Document Name	
Comment	

ITC supports the EEI response	
Likes 0	
Dislikes 0	
Response	

8. Do you agree that CIP-014-4 is cost effective to address the reliability issue of physical security? If no, why not?	
Jodirah Green - ACES Power Marketing - 1,3,4,5,6 - MRO,WECC,Texas RE,SERC,RF, Group Name ACES Collaborators	
Answer	No
Document Name	
Comment	
Based on this draft and the recommended changes, it is not possible to understand the cost effectiveness.	
Likes 0	
Dislikes 0	
Response	
Jason Snodgrass - Jason Snodgrass On Behalf of: Katrina Lyons, Georgia System Operations Corporation, 3, 4; - Jason Snodgrass	
Answer	No
Document Name	
Comment	
GSOC supports comments provided by Georgia Transmission	
Likes 0	
Dislikes 0	
Response	
Gail Elliott - Gail Elliott On Behalf of: Michael Moltane, International Transmission Company Holdings Corporation, 1; - Gail Elliott	
Answer	No
Document Name	
Comment	
Comments: The proposed draft of CIP-014 is too prescriptive. This includes but is not limited to the fault types and items to be monitored. The list of items proposed to be used to identify close proximity is too prescriptive and would require a site visit to each applicable station to confirm if any of the proposed attributes are present. Mileage between the stations should be added to R2.1 and it should be modified to only require one or more attributes. For R2, the phrase ‘of irrespective of ownership’ should be removed.	
Likes 0	
Dislikes 0	

Response	
Dwanique Spiller - Berkshire Hathaway - NV Energy - 5	
Answer	No
Document Name	
Comment	
Costs are difficult to forecast at this juncture.	
Likes 0	
Dislikes 0	
Response	
Selene Willis - Edison International - Southern California Edison Company - 5	
Answer	No
Document Name	
Comment	
See comments submitted by the Edison Eclectic Institute	
Likes 0	
Dislikes 0	
Response	
Jesus Sammy Alcaraz - Imperial Irrigation District - 1	
Answer	No
Document Name	
Comment	
The current proposed revision to CIP-014 is not deemed cost-effective. Managing the protection of neighboring facilities owned by different entities can be both costly and repetitive for any organization.	
Likes 0	
Dislikes 0	
Response	

Denise Sanchez - Denise Sanchez On Behalf of: Diana Torres, Imperial Irrigation District, 1, 6, 5, 3; George Kirschner, Imperial Irrigation District, 1, 6, 5, 3; Jesus Sammy Alcaraz, Imperial Irrigation District, 1, 6, 5, 3; Tino Zaragoza, Imperial Irrigation District, 1, 6, 5, 3; - Denise Sanchez	
Answer	No
Document Name	
Comment	
The current proposed revision to CIP-014 is not deemed cost-effective. Managing the protection of neighboring facilities owned by different entities can be both costly and repetitive for any organization.	
Likes 0	
Dislikes 0	
Response	
Stephen Stafford - Stephen Stafford On Behalf of: Greg Davis, Georgia Transmission Corporation, 1; - Stephen Stafford	
Answer	No
Document Name	
Comment	
The overall changes to this standard cannot easily be evaluated from a cost-effectiveness perspective. However, there are some areas of added cost that could be removed from the standard. For example, regarding requirement R6, if the assessment is conducted by a TP or PC using a more prescriptive CIP-014 (R3.1), then it should no longer be necessary to have an unaffiliated third-party verifier. This requirement appears to cause an undue burden/expense on the responsible entity with little to no gain. There are no other studies or assessments conducted by the TP or PC that require this oversight or gives reason to question the judgment of the TP or PC. The responsible entity will either conduct the assessment according to the standard or face the repercussions of non-compliance.	
Likes 0	
Dislikes 0	
Response	
Hillary Creurer - Allete - Minnesota Power, Inc. - 1	
Answer	No
Document Name	
Comment	
Minnesota Power supports MRO-NSRF’s comments.	
Likes 0	

Dislikes 0	
Response	
Andy Fuhrman - Andy Fuhrman On Behalf of: Theresa Allard, Minnkota Power Cooperative Inc., 1; - Andy Fuhrman	
Answer	No
Document Name	
Comment	
Requiring the CIP-014 risk assessment every 36 months for utilities who have not previously identified any stations or substations as critical will not be cost effective; see MPC's comments in response to question 6.	
Likes 0	
Dislikes 0	
Response	
Israel Perez - Israel Perez On Behalf of: Laura Somak, Salt River Project, 3, 6, 5, 1; Mathew Weber, Salt River Project, 3, 6, 5, 1; Thomas Johnson, Salt River Project, 3, 6, 5, 1; Timothy Singh, Salt River Project, 3, 6, 5, 1; - Israel Perez	
Answer	No
Document Name	
Comment	
SRP supports the MRO NSRF with Tacoma Power's comments.	
Likes 0	
Dislikes 0	
Response	
Ellese Murphy - Duke Energy - 1,3,5,6 - Texas RE,SERC,RF	
Answer	No
Document Name	
Comment	
As proposed, the continued ambiguity in CIP-014 is not a cost-effective approach to identifying and implementing physical security improvements. Simulating implausible study scenarios is a foundational challenge to maintaining cost effectiveness.	
Likes 0	

Dislikes 0	

Response

Tim Kelley - Tim Kelley On Behalf of: Charles Norton, Sacramento Municipal Utility District, 3, 6, 4, 1, 5; Foung Mua, Sacramento Municipal Utility District, 3, 6, 4, 1, 5; Kevin Smith, Balancing Authority of Northern California, 1; Nicole Looney, Sacramento Municipal Utility District, 3, 6, 4, 1, 5; Ryder Couch, Sacramento Municipal Utility District, 3, 6, 4, 1, 5; Wei Shao, Sacramento Municipal Utility District, 3, 6, 4, 1, 5; - Tim Kelley, Group Name SMUD and BANC	
Answer	No
Document Name	

Comment
This proposed version of CIP-014-4 is not cost effective as it would automatically designate any Transmission station(s) or Transmission substation(s) **in proximity** to a critical Transmission station(s) or Transmission substation(s) as critical, regardless of ownership, size, or ability to cause (by itself) instability, uncontrolled separation, or Cascading within an Interconnection. The changes proposed would commit small entities to implement expensive physical security plans that would not be required if they were not physically located in proximity to an existing critical Transmission station or Transmission substation. Also, the risk assessments required by CIP-014 are not quick and easy to do. Requirement R5 requires the risk assessment be performed every 36 calendar months regardless if there is no change in applicable Transmission station(s) and Transmission substation(s). CIP-014-4 should give some consideration and leeway to allow entities with no changes in their list(s) of applicable assets to perform risk assessments every 60 months.

Likes 0	
Dislikes 0	

Response

Donna Wood - Tri-State G and T Association, Inc. - 1	
Answer	No
Document Name	

Comment
Tri-State agrees with the MRO NSRF Submitted Comments

Likes 0	
Dislikes 0	

Response

Jennifer Bray - Arizona Electric Power Cooperative, Inc. - 1	
Answer	No
Document Name	

Comment
AEPC signed on to ACES comments below: Based on this draft and the recommended changes, it is not possible to understand the cost effectiveness.

Likes 0	
Dislikes 0	

Response

Michael Dillard - Austin Energy - 5, Group Name Austin Energy	
Answer	No
Document Name	

Comment
Austin Energy supports MRO's comments. Attached in Question 1.

Likes 0	
Dislikes 0	

Response

Ben Hammer - Western Area Power Administration - 1	
Answer	No
Document Name	

Comment
WAPA concurs with the comments provided by the MRO NSRF. In addition, the physical proximity criteria could result in a significant increase in the groups of substations evaluated, adding cost and time burdens. There is no technical justification or documented physical threat that supports the significant cost of evaluating and protecting these low-risk stations.

Likes 0	
Dislikes 0	

Response

Karen Demos - NextEra Energy - Florida Power and Light Co. - 3	
Answer	No
Document Name	

Comment	
NextEra/FPL supports EEI's comments	
Likes 0	
Dislikes 0	
Response	
Cain Braveheart - Bonneville Power Administration - 1,3,5,6 - WECC	
Answer	No
Document Name	
Comment	
BPA does not believe the standard, as is, is cost effective in addressing the reliability of physical security. The spectrum of sites is too broad. BPA believes there is high potential for sites to be identified on a CIP-014-4 list that would have little to no effect on the BES if they were disconnected from the grid. The standard, as is, allows sites with RAS capability to be listed as CIP-014, which mitigates an enormous amount of risk, some might argue all risk. The number of sites that could potentially be categorized as CIP-14 takes resources away from other sites along critical pathways, and sites that directly link to critical infrastructure. Additionally, day to day operations of upstream and downstream sites affect whether singular or multiple pieces of equipment in a site are critical.	
Likes 0	
Dislikes 0	
Response	
Leshel Hutchings - AEP - 3	
Answer	No
Document Name	
Comment	
While this SAR focused on the R1 risk assessment, the most effective protection against all possible threat vectors is to plan redundancy into the Transmission system to remove single points of failure. Protecting individual stations against specific threats will always be less effective than Transmission build out. The standard should be revised to consider Transmission Planning mitigations rather than defaulting to adding physical security.	
Likes 0	
Dislikes 0	
Response	

Alan Kloster - Alan Kloster On Behalf of: Jeremy Harris, Evergy, 3, 5, 1, 6; Kevin Frick, Evergy, 3, 5, 1, 6; Marcus Moor, Evergy, 3, 5, 1, 6; Tiffany Lake, Evergy, 3, 5, 1, 6; - Alan Kloster	
Answer	No
Document Name	
Comment	
Evergy supports and incorporates by reference the comments of the MRO NSRF for question #8.	
Likes 0	
Dislikes 0	
Response	
Brian Millard - Tennessee Valley Authority - 1,3,5,6 - SERC, Group Name TVA RBB	
Answer	No
Document Name	
Comment	
CIP-014-4 does not prescribe cost effective remedies that functionally increase physical security and/or promote system reliability. Forcing entities to study one specific event in the standard, without consideration for precedent and probability, means that funds are either used to construct ineffective physical barriers or to implement costly transmission system upgrades for a system condition that will never occur. Entities should define and study events which have some probability of occurring on their system. These validated events can then serve as the basis to determine whether a physical barrier or transmission system upgrades are better suited for the safety and reliability of that entity's system.	
Likes 0	
Dislikes 0	
Response	
Anna Martinson - MRO - 1,2,3,4,5,6 - MRO, Group Name MRO Group	
Answer	No
Document Name	
Comment	
It is too early in the process to effectively assess the cost considerations. However, these changes have the potential to add cost burden to smaller entities who fall under Attachment 1, Criterion 2.1, or those entities who previously completed studies every 60 months and now must conduct them every 36 months. In addition, the physical proximity criteria could result in a significant increase in the groups of substations evaluated, adding cost and time burdens. There is no technical justification or documented physical threat that supports the significant cost of evaluating and protecting these low-risk stations.	
Likes 1	Lincoln Electric System, 1, Johnson Josh

Dislikes 0	
Response	
Alison Nickells - NiSource - Northern Indiana Public Service Co. - 1 - RF	
Answer	No
Document Name	
Comment	
The implementation of CIP-014-4 R2 and R3.5 as written (see comments above) will not be cost effective in terms of personnel and resources needed to address the physical security issues.	
Likes 0	
Dislikes 0	
Response	
Lucinda Bradshaw - Oncor Electric Delivery - 1 - Texas RE	
Answer	No
Document Name	
Comment	
The cost impacts for the proposed changes to CIP-014-3 are expected to be minimal. Except as raised in the Comments above, the proposed changes add clarity to the current Standard to bring consistency to the risk assessment methodology, and clarify expectations for, effectively evaluating for instability, uncontrolled separation, and Cascading following a physical attack. The upper limit of cost added to entities is bounded due to no alteration of applicable substations potentially receiving security control upgrades. Rather, the cost incurred will be associated with the required additional study rigor, which again is anticipated to be relatively minimal.	
Likes 0	
Dislikes 0	
Response	
Kelley Sargent - Puget Sound Energy, Inc. - 3	
Answer	No
Document Name	
Comment	
It is not clear to us if CIP-014-4 is cost effective to address reliability issue of physical security. Changes introduced in CIP-014-4 with respect to proximity criteria (R1 and R2) may result in additional stations becoming applicable for criticality assessment, thereby potentially increasing costs	

Likes 0	
Dislikes 0	
Response	
Rebika Yitna - Rebika Yitna On Behalf of: Roger Brand, MEAG Power, 3, 1; - Rebika Yitna	
Answer	No
Document Name	
Comment	
Performing the risk assessment every 36 months rather than every 60 months does increase the cost for Transmission Owners internally and for the cost of using an unaffiliated 3rd party to verify the risk assessment. Also, it is expected with the newly added adjacent station(s)/substation(s) requirement that this will incur a cost burden and will not be cost effective, if/when additional station(s)/substation(s) are added to the applicable list.	
Likes 0	
Dislikes 0	
Response	
Jennie Wike - Jennie Wike On Behalf of: John Merrell, Tacoma Public Utilities (Tacoma, WA), 1, 4, 5, 6, 3; - Jennie Wike, Group Name Tacoma Power	
Answer	No
Document Name	
Comment	
Tacoma Power supports the MRO NSRF comments, as follows. It is too early in the process to effectively assess the cost considerations. However, these changes have the potential to add cost burden to smaller entities who fall under Attachment 1, Criterion 2.1, or those entities who previously completed studies every 60 months and now must conduct them every 36 months. In addition, the physical proximity criteria could result in a significant increase in the groups of substations evaluated, adding cost and time burdens. There is no technical justification or documented physical threat that supports the significant cost of evaluating and protecting these low-risk stations.	
Likes 0	
Dislikes 0	
Response	
Kevin Conway - Western Power Pool - 4	
Answer	No
Document Name	

Comment
No cost/benefit study has been provided to help determine cost effectiveness of CIP-014. So far, the implementation of CIP-014 has been very expensive to small utilities and has resulted in no proven cost savings. Quite the opposite, smaller entities have had problems with the auditing of CIP-014 and auditor subjectivity to assessments and risk analysis. In some cases, auditors did not agree with mitigation efforts or the quality of the mitigation efforts. CIP-014, in general, has also resulted in significant costs to entities who have qualified affiliates who can perform these threat assessments without the need to hire unaffiliated third-parties. Seattle City and Los Angelos, to name two, have their own police departments, investigative units, but are still required to hire an un-affiliated third party to review CIP-014 methodologies and security plans. Typically, this review is done by a less qualified third-party contractor that charges significant consulting rates to rubber stamp these plans.

Likes 0	
Dislikes 0	

Response

Matt Carden - Southern Company - Southern Company Services, Inc. - 1	
Answer	No
Document Name	

Comment
Southern Company recognizes the financial impacts of performing the risk assessment every 36 months rather than 60 months for Transmission Owners that have not identified any Transmission stations or Transmission substations. This is magnified by the requirement to have an unaffiliated third party verify the risk assessment which does not provide a reliability benefit and no longer meets the original intent with the added specificity of the proposed standard.

Likes 0	
Dislikes 0	

Response

James Keele - Entergy - 3	
Answer	No
Document Name	

Comment
Don’t know what the “Cost” will be until the full scope of the requirement has been evaluated.

Likes 0	
Dislikes 0	

Response

Sean Bodkin - Dominion - Dominion Resources, Inc. - 6, Group Name Dominion	
Answer	No
Document Name	
Comment	
Likes 0	
Dislikes 0	
Response	
Robert Jones - Seattle City Light - 4	
Answer	Yes
Document Name	
Comment	
It is too early to determine cost effectiveness impact.	
Likes 0	
Dislikes 0	
Response	
Chantal Mazza - Chantal Mazza On Behalf of: Junji Yamaguchi, Hydro-Quebec (HQ), 1, 5; Nicolas Turcotte, Hydro-Quebec (HQ), 1, 5; - Chantal Mazza	
Answer	Yes
Document Name	
Comment	
Depending on the power system, stability may or may not be the only determining factor when identifying critical elements. System performance assessments that aim at determining critical elements of a system can only be conducted by an entity that possess the overall view and knowledge of the system behavior. As such, the Transmission Planners (TP) and/or Planning coordinators (PC) are the best suited entities to determine the critical elements of the power system under their responsibility. We believe the application a performance-based methodology such as the NPCC A-10, as suggested by the drafting team, is a reliable, secure and cost-effective way to determine the scope of applicability where investments should be directed. However, the required efforts, technical knowledge and resources required to produce the resulting list of critical facilities are significant and cannot be justifiable, in our view, for the purposes of CIP-014 only, and can certainly not be performed by a transmission owner alone.	

The current disparity among the different approaches currently used to establish the CIP-014 applicable facilities list assessment can be alleviated or practically eliminated by moving the responsibility of establishing the CIP-014 applicable facilities list to the Transmission Planners (TP) and/or Planning coordinators (PC).

The Transmission Planners (TP) and/or Planning coordinators (PC), should be required to provide a comprehensive methodology and uniform approach in determining the proper level of contingency applied to the system in their jurisdiction order to determine the CIP-014 applicable facilities list.

The Transmission Planners (TP) and/or Planning coordinators (PC) should be allowed to use past or related studies, using a uniform and justified contingency level to support the resulting facilities identified for applicability.

We suggest considering the following approach:

Keep the methodological approach of the current version of CIP-014 standard, where flexibility allows to account for disparity in determining factors associated power system architecture and behavior.

Make the Transmission Planners (TP) and/or Planning coordinators (PC) as the functional entities responsible for determining the list of critical facilities, instead of the current transmission owners.

Transfers the R1, R2 and R3 responsibility to the Transmission Planners (TP) and/or Planning coordinators (PC).

R3 should include a requirement for the Planning Coordinators to notify the transmission owners (TO) of any modifications to the CIP-014 applicable facilities list.

Likes 0	
Dislikes 0	

Response

Dave Krueger - SERC Reliability Corporation - 10

Answer	Yes
Document Name	

Comment

Thank you for the chance to comment, SERC appreciates the complexity of the SDT's task of modifying multiple parts of such a high-profile and high-priority standard. While we generally agree CIP-014-4 is a cost effective approach, additional methods to improve its cost effectiveness are suggested in Item #Additional.A below under 'additional comments'

Likes 0	
Dislikes 0	

Response

Mark Garza - FirstEnergy - FirstEnergy Corporation - 4, Group Name FE Voter

Answer	Yes
Document Name	

Comment	
FirstEnergy has no issue with the cost effectiveness of this proposed standard.	
Likes 0	
Dislikes 0	
Response	
Jay Sethi - Manitoba Hydro - 1,3,5,6 - MRO, Group Name Manitoba Hydro Group	
Answer	Yes
Document Name	
Comment	
Manitoba Hydro notes that there is an opportunity to make the standard more efficient by clearly outlining when risk based studies are required and what types of studies are required.	
Likes 0	
Dislikes 0	
Response	
Zenon O'young-Chu - Seattle City Light - 3	
Answer	Yes
Document Name	
Comment	
Likes 0	
Dislikes 0	
Response	
Amy Wesselkamper - PNM Resources - Public Service Company of New Mexico - 3	
Answer	Yes
Document Name	
Comment	

Likes 0	
Dislikes 0	
Response	
Daren Brubaker - Seattle City Light - 6	
Answer	Yes
Document Name	
Comment	
Likes 0	
Dislikes 0	
Response	
Carver Powers - Utility Services, Inc. - 4	
Answer	Yes
Document Name	
Comment	
Likes 0	
Dislikes 0	
Response	
Chris Shultz - Seattle City Light - 5	
Answer	Yes
Document Name	
Comment	
Likes 0	
Dislikes 0	
Response	
Michael Jang - Seattle City Light - 1	

Answer	Yes
Document Name	
Comment	
Likes 0	
Dislikes 0	
Response	
Mike Magruder - Avista - Avista Corporation - 1,3,5	
Answer	Yes
Document Name	
Comment	
Likes 0	
Dislikes 0	
Response	
Ruida Shu - Northeast Power Coordinating Council - 1,2,3,4,5,6,7,8,9,10 - NPCC, Group Name NPCC RSC	
Answer	Yes
Document Name	
Comment	
Likes 0	
Dislikes 0	
Response	
James Baldwin - James Baldwin On Behalf of: Matt Lewis, Lower Colorado River Authority, 5, 1; - James Baldwin	
Answer	Yes
Document Name	
Comment	
Likes 0	

Dislikes 0	
Response	
Fon Hiew - NB Power Corporation - New Brunswick Power Transmission Corporation - 5	
Answer	Yes
Document Name	
Comment	
Likes 0	
Dislikes 0	
Response	
Jeffrey Streifling - NB Power Corporation - 1	
Answer	Yes
Document Name	
Comment	
Likes 0	
Dislikes 0	
Response	
Teresa Krabe - Lower Colorado River Authority - 5	
Answer	Yes
Document Name	
Comment	
Likes 0	
Dislikes 0	
Response	
Andrew Smith - APS - Arizona Public Service Co. - 5	
Answer	Yes

Document Name	
Comment	
Likes 0	
Dislikes 0	
Response	
Anne Kronshage - Public Utility District No. 1 of Chelan County - 6, Group Name Public Utility District No. 1 of Chelan County - Voting Group	
Answer	Yes
Document Name	
Comment	
Likes 0	
Dislikes 0	
Response	
Michele Shafer - New York State Electric & Gas (NYSEG) - 6	
Answer	Yes
Document Name	
Comment	
Likes 0	
Dislikes 0	
Response	
Michele Tondalo - United Illuminating Co. - 1	
Answer	Yes
Document Name	
Comment	
Likes 0	
Dislikes 0	

Response	
Tyler Schwendiman - ReliabilityFirst - 10	
Answer	Yes
Document Name	
Comment	
Likes 0	
Dislikes 0	
Response	
Richard Jackson - U.S. Bureau of Reclamation - 1	
Answer	Yes
Document Name	
Comment	
Likes 0	
Dislikes 0	
Response	
Robert Follini - Avista - Avista Corporation - 3	
Answer	Yes
Document Name	
Comment	
Likes 0	
Dislikes 0	
Response	
Steven Rueckert - Western Electricity Coordinating Council - 10, Group Name WECC Entity Monitoring	
Answer	
Document Name	

Comment	
No Comment	
Likes 0	
Dislikes 0	
Response	
David Jendras Sr - Ameren - Ameren Services - 3	
Answer	
Document Name	
Comment	
Ameren has no comment on cost effectiveness of the project to address the reliability issue.	
Likes 0	
Dislikes 0	
Response	
Mark Flanary - Midwest Reliability Organization - 10	
Answer	
Document Name	
Comment	
MRO is not in a position to assess the cost aspect.	
Likes 0	
Dislikes 0	
Response	
Devin Shines - PPL - Louisville Gas and Electric Co. - 1,3,5,6 - SERC,RF	
Answer	
Document Name	
Comment	

Louisville Gas & Electric and Kentucky Utilities support EEI's comments.	
Likes 0	
Dislikes 0	
Response	
Rachel Schuldt - Black Hills Corporation - 6, Group Name Black Hills Corporation - All Segments	
Answer	
Document Name	
Comment	
Black Hills Corporation will not comment on cost effectiveness.	
Likes 0	
Dislikes 0	
Response	
Richard Vendetti - NextEra Energy - 5	
Answer	
Document Name	
Comment	
NEE does not comment on cost.	
Likes 0	
Dislikes 0	
Response	
TRACEY JOHNSON - Southern Indiana Gas and Electric Co. - 3,5,6 - RF	
Answer	
Document Name	
Comment	
No Comment	

Likes 0	
Dislikes 0	
Response	

9. Provide any additional comments for the standard drafting team to consider, if desired.	
Sean Steffensen - IDACORP - Idaho Power Company - 1	
Answer	
Document Name	
Comment	
- There were several references within the Violation Severity Levels section that don't seem to be pointing to the correct parts of the document. The Violation Severity Levels section needs to be reviewed to make sure it's pointing to the correct sections. - Idaho Power questions the requirement for proximity stations being studied as simultaneous SLG faults at the highest bus of both stations. We wonder if that will always be the right study for a physical attack on a station in proximity as it really depends on how proximity stations are defined and what the configuration of the station is in each instance.	
Likes 0	
Dislikes 0	
Response	
Jessica Cordero - Unisource - Tucson Electric Power Co. - 1	
Answer	
Document Name	
Comment	
• There needs to be a process to remove stations from critical list if in future assessments it is deemed non-critical. • R6. Increase unaffiliated third party verification timeline from 90 calendar days to 180 calendar days to accommodate additional study work being required by CIP-014-4. • Clarify if a critical site is not re-evaluated per R3.2.2 and R5.1, is an evaluation of threats and vulnerabilities still required per new R8?	
Likes 0	
Dislikes 0	
Response	
Kevin Conway - Western Power Pool - 4	
Answer	
Document Name	
Comment	
The Drafting Team should be commended for taking on the responsibility to rework CIP-014. It has a significant challenge ahead of it to ensure that a majority of entities agree with the changes. CIP-014 has had its problems, and the Drafting Team should ensure that not only is FERC's directive met for this standard, but that problems related to the original versions of CIP-014 are addressed. The Drafting Team should focus on auditable, enforceable	

and objective requirements that enhance reliability and do not result in compliance risk and costs to entities that is not commensurate to the overall risk the entity represents to the BPS.

Likes 0	
Dislikes 0	

Response

Jennie Wike - Jennie Wike On Behalf of: John Merrell, Tacoma Public Utilities (Tacoma, WA), 1, 4, 5, 6, 3; - Jennie Wike, Group Name Tacoma Power

Answer	
Document Name	

Comment

Tacoma Power supports the MRO NSRF comments, as follows.

The MRO NSRF appreciates the work the SDT has done on this first draft of CIP-014-4 and offers the following additional comments.

First, the MRO NSRF recommends the SDT eliminate R6, the third party verification for the risk assessment. While this elimination is not explicitly mentioned in the SAR, it is directly tied to the changes proposed in the SAR. The purpose of the third party verification goes away with the increased prescriptiveness of the risk assessment proposed in R3. In addition, since the SAR indicates that industry was not implementing a consistent approach to the risk assessments, then that indicates the third party verifications were also proving to be of little value. This independent verification is a burdensome and costly endeavor that has not proven to be value-added. In many compliance monitoring activities, the verification Requirement is not audited or considered by monitoring personnel. Planning this task with eligible vendors requires significant work to coordinate and thousands of dollars to complete. Given that the verifications exist solely to offer feedback on an approach which will no longer be required with the increased specificity in R3, then their removal would eliminate what has become an unnecessary administrative burden.

Second, the MRO NSRF is concerned that if implemented, the expansion of CIP-014 beyond a single entity makes compliance almost unattainable. The remainder of the Requirements after the R5 Risk Assessment could require an entity to assess threats and vulnerabilities and protect BES Elements that is does not own or operate.

In regards to the Applicability changes, consider a small entity that has no current CIP-014 applicable stations, but has a station adjacent to another entity's larger Transmission Facility that is just under the Applicability threshold on its own. In this case the small entity would now have to create a list for R1 that includes that small station. Then both entities would confirm those same stations through R2 adjacency criteria (duplicative). They would eventually get to the R5 risk assessment performance requirement and conduct an overlapping risk assessment.

The small entity could end up with a list of stations whose loss could result in instability, uncontrolled separation, or Cascading within an Interconnection. The challenge with this situation is that the list will likely contain stations where the real risk is with the station that is not owned or operated by the entity performing the Risk Assessment.

What does this mean for compliance with CIP-014? What does the small entity do to comply with R6-R10? Will this small entity be responsible for assessing threats and vulnerabilities of the large Transmission facilities that they do not own or operate? Are they then responsible for providing security protections for these same stations?

The MRO NSRF recommends that prior to expanding the scope of CIP-014 to include these adjacent facilities either through the drafted 2.1 applicability criteria, or physical proximity criteria as part of a risk assessment methodology, that NERC solicit further information from the industry to determine if a significant risk exists. Similar to Project 2021-03 for TOCCs, it would be beneficial to have a study to analyze the number of impacted sites, the aggregate risk of not including for these locations, and conclusions as to whether regulatory action is needed to address the residual risk.

Finally, the MRO NSRF also recommends the following adjustments to the proposed VSL tables:

1. VSL table “CIP-014-3” should be “CIP-014-4”

2. The VSLs as written are overly prescriptive and don’t reflect reliability risks. For example:

a. For R4 – Request that the drafting team review the number of VSL against the reliability risk of R4. There seem to be too many VSL compared to the actual reliability risks.

b. For R5 – Suggest that lower VSL should be for an assessment performed between 36 and 42 months and severe if greater than 42 months (assumed not at all). Every TO by now has done more than one assessment. Typically the system doesn’t change much over a 3 year time span so that any critical facilities previously identified wouldn’t change. Delaying an assessment a few months is not a severe detriment to reliability.

Likes 0	
Dislikes 0	

Response

Jay Sethi - Manitoba Hydro - 1,3,5,6 - MRO, Group Name Manitoba Hydro Group

Answer	
Document Name	

Comment

MH believes the third-party verification requirement is unnecessary for this standard, so it is recommended that SDT consider removing it. Instead, the standard can be updated to share the assessment reports with adjacent TOs identified as having stations in close vicinity or jointly owned facilities.

Likes 0	
Dislikes 0	

Response

Lidija Efremova - Lidija Efremova On Behalf of: Emma Halilovic, Hydro One Networks, Inc., 1; - Lidija Efremova

Answer	
Document Name	

Comment

We see that NERC SDT is targeting to mimic the NPCC A-10 Identification methodology which is system performance-based. Simulated system performance-based identification methodology is not well suited to this Physical Security standard; it is out of scope.

There is great merit for NERC to review transition to using performance-based methodology for identifying critical elements of the bulk power system. Please keep in mind that the Reliability Coordinators and Transmission Planners are best suited to run these types of studies because have they have broad oversight of their entire footprint, which is needed for this type of determination. Certainly, individual TO’s do not have sufficient tools and knowledge to run NPCC A-10 type studies. This said, we believe there is great merit in NERC considering simulated system performance-based critical infrastructure identification methodology. This identification could flow smoothly into TLP-001 analysis.

For this physical security standard, a practical option for the SDT to consider for physical criticality determination is:

- Start with NERC BES as defined considering inclusions and exclusions
- Then filter by those facilities used in an IROL definition (can be provided by the RC or TP)
- Add in tie-lines that meet criteria: e.g. used for import/export and relied upon to balance area footprint during a significant loss of generation or loss of load event (can be provided by the RC or TP)
- Add in critical stations hubs that supply a significant/critical regional load pocket (can be provided by the RC or TP or TO)
- Add in stations directly connected to nuclear facilities – the station(s) that the nuclear facility generates into before flow disperses
- Then filter by physical threats as this is a physical security standard.

The idea here is that a TO would use readily available information for R1 & R3.

In alternative:

Suggestion to reword 3.1.1 to not be prescriptive on 12 individual study items in the standard. Something along the line of, " ...TO must demonstrate suitable dynamic studies to identify critical stations. It would then be up to the TO to have documentation to pass to auditor which will comprise of dynamic studies, and/or justification why certain ones were omitted.

Likes 0	
Dislikes 0	

Response

Kelley Sargent - Puget Sound Energy, Inc. - 3

Answer	
Document Name	

Comment

It is not clear the type of events CIP-014-4 intends to address that can simultaneously impact 2 or more stations. The standard depends on physical security measures to mitigate such events, however mitigation to the extent may not be feasible nor cost effective.

Likes 0	
Dislikes 0	

Response

Lucinda Bradshaw - Oncor Electric Delivery - 1 - Texas RE

Answer	
Document Name	

Comment

N/A

Likes 0	
Dislikes 0	

Response

Alison Nickells - NiSource - Northern Indiana Public Service Co. - 1 - RF

Answer	
Document Name	

Comment

NIPSCO’s position is that the changes to the CIP-014 standard as written improve the Physical Security Standard. However, the current draft would implement many unknown and potentially costly measures to include transmission substations that are not owned by NIPSCO but within "line of sight" of NIPSCO's applicable transmission stations/substations.

Likes 0	
Dislikes 0	

Response

Tyler Schwendiman - ReliabilityFirst - 10

Answer	
Document Name	

Comment

For R6.1, is the intent to review the risk assessment was performed accurately? If yes, what would a planning-based risk assessment (and having planning experience) have to do with evaluating security measures implemented at the substation to mitigate the risk?
For 6.1.2, what would be an adequate level of transmission planning or analysis experience. This seems ambiguous.
For 6.2 and 6.3, again, it seems that verification efforts of the risk assessment (planning oriented) and physical security recommendations are being mixed here.
In general, consideration needs to be given for “smoking hole” attacks (in which three-phase faults would represent) cannot be completely mitigated through physical security upgrades. In reality, physical security measures will more likely delay, detect, and improve response time for these attacks. What criteria should be used to measure improved physical security posture? In addition, the attack vector of transmission elements outside of the substation would remain vulnerable even after substation physical enhancements are made.

Likes 0	
Dislikes 0	

Response

Mark Garza - FirstEnergy - FirstEnergy Corporation - 4, Group Name FE Voter

Answer	
Document Name	
Comment	

While previously addressed, FirstEnergy is including the following requests:

Requirement 4 states “owned Transmission station(s) and Transmission substation(s) shall coordinate to determine and identify each entity’s individual and joint responsibilities for performing any required risk assessments…” but the VSL for this requirement states “ The Transmission Owner performed a risk assessment but…” with no mention of coordination. FirstEnergy requests synching the intent of the Requirement with the VSL.

Further, the VSL for R5 appears to be a copy-and-paste of R5. FirstEnergy requests edits to synchronize the intent of R5 with the VSL.

Likes 0	
Dislikes 0	
Response	
Anna Martinson - MRO - 1,2,3,4,5,6 - MRO, Group Name MRO Group	
Answer	
Document Name	
Comment	

The MRO NSRF appreciates the work the SDT has done on this first draft of CIP-014-4 and offers the following additional comments.

First, the MRO NSRF recommends the SDT eliminate R6, the third party verification for the risk assessment. While this elimination is not explicitly mentioned in the SAR, it is directly tied to the changes proposed in the SAR. The purpose of the third party verification goes away with the increased prescriptiveness of the risk assessment proposed in R3. In addition, since the SAR indicates that industry was not implementing a consistent approach to the risk assessments, then that indicates the third party verifications were also proving to be of little value. This independent verification is a burdensome and costly endeavor that has not proven to be value-added. In many compliance monitoring activities, the verification Requirement is not audited or considered by monitoring personnel. Planning this task with eligible vendors requires significant work to coordinate and thousands of dollars to complete. Given that the verifications exist solely to offer feedback on an approach which will no longer be required with the increased specificity in R3, then their removal would eliminate what has become an unnecessary administrative burden.

Second, the MRO NSRF is concerned that if implemented, the expansion of CIP-014 beyond a single entity makes compliance almost unattainable. The remainder of the Requirements after the R5 Risk Assessment could require an entity to assess threats and vulnerabilities and protect BES Elements that is does not own or operate.

In regards to the Applicability changes, consider a small entity that has no current CIP-014 applicable stations, but has a station adjacent to another entity’s larger Transmission Facility that is just under the Applicability threshold on its own. In this case the small entity would now have to create a list

for R1 that includes that small station. Then both entities would confirm those same stations through R2 adjacency criteria (duplicative). They would eventually get to the R5 risk assessment performance requirement and conduct an overlapping risk assessment.

The small entity could end up with a list of stations whose loss could result in instability, uncontrolled separation, or Cascading within an Interconnection. The challenge with this situation is that the list will likely contain stations where the real risk is with the station that is not owned or operated by the entity performing the Risk Assessment.

What does this mean for compliance with CIP-014? What does the small entity do to comply with R6-R10? Will this small entity be responsible for assessing threats and vulnerabilities of the large Transmission facilities that they do not own or operate? Are they then responsible for providing security protections for these same stations?

The MRO NSRF recommends that prior to expanding the scope of CIP-014 to include these adjacent facilities either through the drafted 2.1 applicability criteria, or physical proximity criteria as part of a risk assessment methodology, that NERC solicit further information from the industry to determine if a significant risk exists. Similar to Project 2021-03 for TOCCs, it would be beneficial to have a study to

analyze the number of impacted sites, the aggregate risk of not including for these locations, and conclusions as to whether regulatory action is needed to address the residual risk.

Finally, the MRO NSRF also recommends the following adjustments to the proposed VSL tables:

1. VSL table “CIP-014-3” should be “CIP-014-4”

2. The VSLs as written are overly prescriptive and don’t reflect reliability risks. For example:

a. For R4 – Request that the drafting team review the number of VSL against the reliability risk of R4. There seem to be too many VSL compared to the actual reliability risks.

b. For R5 – Suggest that lower VSL should be for an assessment performed between 36 and 42 months and severe if greater than 42 months (assumed not at all). Every TO by now has done more than one assessment. Typically the system doesn’t change much over a 3 year time span so that any critical facilities previously identified wouldn’t change. Delaying an assessment a few months is not a severe detriment to reliability.

Likes 1	Lincoln Electric System, 1, Johnson Josh
Dislikes 0	

Response

Brian Millard - Tennessee Valley Authority - 1,3,5,6 - SERC, Group Name TVA RBB

Answer	
Document Name	

Comment

Regarding requirements R2 and R3, proximity and event definition should be foundationally based in reality and practicality. Functional Entities should have the latitude to determine potential events that may occur on their system or in their area. Furthermore, it is generally beyond the skillset of planning engineers, who complete CIP-014-4 studies, to determine what types of attack may impact one or multiple stations. Risk assessments, completed by security professionals, based on things like location, historical events, and current threats should be utilized to define event scope instead of planning engineers. Using this methodology would further drive the accuracy and applicability of CIP-014-4 event simulations.

Likes 0	

Dislikes 0	
Response	
Alan Kloster - Alan Kloster On Behalf of: Jeremy Harris, Evergy, 3, 5, 1, 6; Kevin Frick, Evergy, 3, 5, 1, 6; Marcus Moor, Evergy, 3, 5, 1, 6; Tiffany Lake, Evergy, 3, 5, 1, 6; - Alan Kloster	
Answer	
Document Name	
Comment	
Evergy supports and incorporates by reference the comments of the Edison Electric Insitute (EEI) and MRO NSRF for question #9.	
Likes 0	
Dislikes 0	
Response	
Leshel Hutchings - AEP - 3	
Answer	
Document Name	
Comment	
There is a typo in R8 Section 8.3 which could be corrected in this revision. “Electricity Sector Information Sharing and Analysis Center (ES-ISAC)” should say “Electricity Information Sharing and Analysis Center (E-ISAC)”. AEP’s comments to the draft requirement changes would necessitate the need to change the VSL table.	
Likes 0	
Dislikes 0	
Response	
Cain Braveheart - Bonneville Power Administration - 1,3,5,6 - WECC	
Answer	
Document Name	
Comment	
It appears the revisions do not address the fundamental flaw with CIP-014: there is no language to guide or require entities to frame the study that is used as the risk assessment around a specific physical security scenario or threat vector(s). Being vector-agnostic is failing to bridge the divide	

between the different missions of transmission planners and physical security experts. Uncertainty remains about what is supposed to be studied ("smoking hole dilemma"), especially when compared with considerations of how likely or realistic certain threat vectors appear to be.

BPA believes there is still bias in the language toward adding physical security treatments to sites that will forever stay on the list, when system redesign, presence of Remedial Action Schemes, etc. could be used to reduce the criticality of a site.

BPA believes there is still subjectivity due to the lack of a clear and precise definition for "critical" and "primary control center".

The revisions appear to be moving in the direction of increasing the number of CIP-014 sites, when the original intent of the standard was to have a very small number of sites.

Likes 0	
Dislikes 0	

Response

Karen Demos - NextEra Energy - Florida Power and Light Co. - 3

Answer	
Document Name	

Comment

NextEra/FPL supports EEI's comments

Likes 0	
Dislikes 0	

Response

Ben Hammer - Western Area Power Administration - 1

Answer	
Document Name	

Comment

WAPA appreciates the work the SDT has done on this first draft of CIP-014-4. WAPA concurs with the additional comments provided by the MRO NSRF and offers the following additional comments.

The "clean" version of the drafted Standard posted on the project page is different than the "redline" version. Compare R6 as the example between the two posted versions.

Additionally, WAPA strongly recommends the SDT eliminate R6, the third party verification for the risk assessment. WAPA agrees with the reasons already proposed by the MRO NSRF, but also because it holds the entity responsible for the actions of another organization, and creates the risk of non-compliances when a separate reviewer fails to complete their work on time.

While this elimination is not explicitly mentioned in the SAR, it is directly tied to the changes proposed in the SAR. The purpose of the third party verification goes away with the increased prescriptiveness of the risk assessment proposed in R3. In addition, since the SAR indicates that industry was

not implementing a consistent approach to the risk assessments, then that indicates the third party verifications were also proving to be of little value. This independent verification is a burdensome and costly endeavor that has not proven to be value-added. Planning this task with eligible vendors requires significant work to coordinate and thousands of dollars to complete. Given that the verifications exist solely to offer feedback on an approach which will no longer be required with the increased specificity in R3, then their removal would eliminate what has become an unnecessary administrative burden.

Likes 0	
Dislikes 0	

Response

Michael Dillard - Austin Energy - 5, Group Name Austin Energy

Answer	
Document Name	

Comment

Austin Energy supports MRO's comments. Attached in Question 1.

Likes 0	
Dislikes 0	

Response

Anne Kronshage - Public Utility District No. 1 of Chelan County - 6, Group Name Public Utility District No. 1 of Chelan County - Voting Group

Answer	
Document Name	

Comment

As noted above multiple times, NERC may wish to consider how to provide an incentive to utilities to think of ways to get stations de-classified. In TPL-001-5, the concept of Corrective Action Plan is used; in the current form of CIP-014, the corrective action plan does not contemplate the potential of system-level fixes (such as modifications to far-end protection), but instead jumps to the assumption that physical security is the only solution and the system is 'stuck' with the instability, cascading, or uncontrolled separation risk. This is not necessarily the case.

The layout of the proposed steady state and stability requirements read 'clunky'; in TPL-001-5, R3 clearly addresses the steady state simulation requirements and simulation expectations; R4 clearly addresses the stability simulation requirements and simulation expectations. This separation in TPL-001-5's presentation allowed for greater clarity, whereas the current proposed draft of CIP-014 combines its steady state and stability requirements in overlapping sections of R3.

The requirement under the proposed R3.1.2 "Technically supported thresholds for acceptable load loss and acceptable generation loss" is something that has been a regulatory discussion for years, with not a lot of firm guidance or clarity, such as a 1000 MW bright-line. The current CIP-014 has not provided much in the way of example or guidance for utilities to clarify what is expected here either, neither in the proposed revision itself or in the technical rationale (a little bit of guidance is noted here, but this is not sufficient). These would likely be big numbers for a large load-serving utility; conversely, these would be small numbers for a small utility. "Whose load or generation" becomes a further point, as does steady state vs. stability model load loss (such as composite load model load drop in WECC), consequential vs. non-consequential loss, and customer counts vs load loss (for example, 1000 MW at peak load is likely a different level of customer impact than loss of 1000 MW during an off-peak condition). As such, this language will likely result in furthering the spread of differences for methods and assumptions used in CIP-

014 assessments. Since the proposed requirement and its outcome doesn't appear to support the Project Scope objectives and these methodology differences will exist regardless of this language, it is recommended R3.1.2 be removed.	
Likes 0	
Dislikes 0	
Response	
Jennifer Bray - Arizona Electric Power Cooperative, Inc. - 1	
Answer	
Document Name	
Comment	
Thank you for the opportunity to comment.	
Likes 0	
Dislikes 0	
Response	
Richard Vendetti - NextEra Energy - 5	
Answer	
Document Name	
Comment	
NEE support's EEI comments: "For efficiency and to avoid revising CIP-014-4 as part of project 2021-03, please consider coordinating with project 2021-03 to edit the IROL wording in CIP-014 now as part of project 2023-06. Please consider revising Attachment 1, item 3: "3. Transmission Facilities at a single station or substation location that are identified by its Reliability Coordinator, Planning Coordinator, or Transmission Planner as critical to the derivation of Interconnection Reliability Operating Limits (IROLs) and their associated contingencies." to read as, "3. Transmission Facilities at a single station or substation location that are identified by its Planning Coordinator or Transmission Planner, per its Planning Assessment of the Near-Term Transmission Planning Horizon as a Facility that if lost or degraded are expected to result in instances of instability, Cascading, or uncontrolled separation that adversely impacts the reliability of the Bulk Electric System for a planning event."	
Likes 0	
Dislikes 0	
Response	
Donna Wood - Tri-State G and T Association, Inc. - 1	
Answer	
Document Name	

Comment
Tri-State agrees with the MRO NSRF Submitted Comments under Additional Comments

Likes 0	
Dislikes 0	

Response

Rachel Schuldt - Black Hills Corporation - 6, Group Name Black Hills Corporation - All Segments

Answer	
Document Name	

Comment
Black Hills Corporation agrees with the following EEI comment: For efficiency and to avoid revising CIP-014-4 as part of project 2021-03, please consider coordinating with project 2021-03 to edit the IROL wording in CIP-014 now as part of project 2023-06. Please consider revising Attachment 1, item 3: “3. Transmission Facilities at a single station or substation location that are identified by its Reliability Coordinator, Planning Coordinator, or Transmission Planner as critical to the derivation of Interconnection Reliability Operating Limits (IROLs) and their associated contingencies.” to read as, “3. Transmission Facilities at a single station or substation location that are identified by its Planning Coordinator or Transmission Planner, per its Planning Assessment of the Near-Term Transmission Planning Horizon as a Facility that if lost or degraded are expected to result in instances of instability, Cascading, or uncontrolled separation that adversely impacts the reliability of the Bulk Electric System for a planning event.”

Likes 0	
Dislikes 0	

Response

Ellese Murphy - Duke Energy - 1,3,5,6 - Texas RE,SERC,RF

Answer	
Document Name	

Comment
Duke Energy supports EEI’s additional comments.

Likes 0	
Dislikes 0	

Response

Sean Bodkin - Dominion - Dominion Resources, Inc. - 6, Group Name Dominion	
Answer	
Document Name	
Comment	
Dominion Energy supports EEI's additional comments. Also, Dominion Energy is of the opinion that resources to gather the required information and to perform the required studies are highly specialized and not readily available. Internal expertise continues to be a challenge to obtain, and vendors are very limited in their abilities and bandwidth.	
Likes 0	
Dislikes 0	
Response	
Joshua London - Eversource Energy - 1, Group Name Eversource	
Answer	
Document Name	
Comment	

R6.2: Eversource requests R6.2 allow for 90 days instead of 60 so proper work can be completed. With a more detailed analysis being required, there is a higher chance of disagreement with our third party reviewer, requiring more time needed for response.

R7: Eversource requests the removal of "is not under the operational control of the Transmission Owner " in R7. Regardless if the facility is owned by the company that operates the facility, the Transmission Operator should be notified as the group doing the CIP-014 assessment and the group operating the system should be required to communicate.

Technical Rationale Comments:

Requirement 2 – Eversource has concern with the phrase "certain amount of discretion and flexibility is intended to be allowable for each Transmission Owner" as the "flexibility" often leads to disagreement with an auditor if the interpretations do not much either.

Requirement 3, Part 3.1 – Rationale spelled wrong. Also, Eversource agrees there should be flexibility around load loss as it will vary within the interconnection, but the system frequency allowed should be standardized throughout the interconnection.

Requirement R3, Part 3.3 – Rationale does not line up with what is in standard, appears to be missing.

Requirement R3, Part 3.4 – Why not a three-phase fault at all transmission buses within a single Transmission station or Transmission substation?

Requirement R3, Part 3.5 – Why not a three-phase fault at all transmission buses within a single Transmission station or Transmission substation?

Requirement R3, Part 3.6 - Eversource fully supports this.

Requirement R3, Part 3.6.1 – Eversource fully supports this.

Likes 0	
Dislikes 0	

Response

Andrew Smith - APS - Arizona Public Service Co. - 5

Answer	
Document Name	

Comment

AZPS seeks to understand the complete responsibilities for transmission stations within proximity of an applicable station which has been deemed critical under the risk assessment. As written, the draft could be interpreted to mean that entities must conduct the risk assessment on stations which are not owned or operated by the entity. It is not clear what responsibilities the entity has when the substation is not jointly owned. The draft team should clarify all considerations for a transmission station identified as “within proximity” but not owned by the entity.

Likes 0	
Dislikes 0	

Response

Devin Shines - PPL - Louisville Gas and Electric Co. - 1,3,5,6 - SERC,RF

Answer	
Document Name	

Comment

Louisville Gas & Electric and Kentucky Utilities support EEI's comments.

Likes 0	
Dislikes 0	
Response	
Dave Krueger - SERC Reliability Corporation - 10	
Answer	
Document Name	
Comment	

Thank you for the chance to comment, SERC appreciates the complexity of the SDT's task of modifying multiple parts of such a high-profile standard.

· Item #Additional.A: Consider editing requirement CIP-014-4 R6.2 indicating that the details of the R2 proximity criteria/analysis, R3 risk assessment methodology, and R5 risk assessment completion be provided to the third-party verifier. Given the new breadth of components in R1, R2, R3, and R5, these materials would undoubtedly be needed for the Third-Party Verifier(s) to fully review the Responsible Entity's performance. This aids in fulfillment of SAR Scope Item #3, "Assure the adequacy and consistent implementation of technically supported justification for study decisions" as the R2 Third Party Verifier is the timely and primary control to provide feedback that R1-R5 implementation was consistent, and if any recommendations or changes bear consideration.

· Item #Additional.B Consider editing requirement CIP-014-4 R6.4 to indicate that the R2 proximity criteria, R3 risk assessment methodology, and R5 risk assessment completion be made available to the personnel performing the R8 threat/vulnerability evaluation, and the R9 security/resiliency plans without running afoul of information protections. Security and resilience measures will be planned, prioritized, and implemented with higher effectiveness and precision if the specific knowledge of the types of contingencies, types of cases/BES situations studied, and the results of what specific methodology results failed are provided. This will enable the personnel performing R8 and R9 to better design the security and resiliency measures for specific threat/vulnerability scenarios which would specifically lead to the 'Evil 3', instead of assumed or generically considered threat/vulnerability exploitation. It should be made clear in either the requirement language or implementation guidance that sharing this information in order to develop mission and cost-effective resiliency and security measures is expressly permitted under R6.4 (and R9.4). Doing this will reduce the deployment of generic and less-effective measures which do not effectively reduce or otherwise mitigate the risk of instability, uncontrolled separation, or Cascading due to the loss of critical sites. This would aid in fulfillment of SAR Scope Item #4, "Clarify what study scenario(s) and other study assumptions are appropriate and reasonable considering the intent of CIP-014-3 and the potential range of issues during a physical attack. Simulations should incorporate the loss of station elements without local system protection."

Likes 0	
Dislikes 0	
Response	
Jeffrey Streifling - NB Power Corporation - 1	
Answer	
Document Name	
Comment	

Request R6.2 allow for 90 days instead of 60 so proper work can be completed. With a more detailed analysis being required, there is a higher chance of disagreement with a third party reviewer, requiring more time needed for response.

Likes 0	
Dislikes 0	

Response

Mark Flanary - Midwest Reliability Organization - 10

Answer	
Document Name	

Comment

The Technical Rationale has a heading of "PRC-002-4 Technical Rational" when opened in Adobe Acrobat.

In the clean version of the draft CIP-014-4 R6.1 appears to be a copy of CIP-014-3 R5.1. The redline version of CIP-014-4 R6.1 appears correct

Likes 0	
Dislikes 0	

Response

Chantal Mazza - Chantal Mazza On Behalf of: Junji Yamaguchi, Hydro-Quebec (HQ), 1, 5; Nicolas Turcotte, Hydro-Quebec (HQ), 1, 5; - Chantal Mazza

Answer	
Document Name	

Comment

Request R6.2 allow for 90 days instead of 60 so proper work can be completed. With a more detailed analysis being required, there is a higher chance of disagreement with a third party reviewer, requiring more time needed for response.

Likes 0	
Dislikes 0	

Response

Fon Hiew - NB Power Corporation - New Brunswick Power Transmission Corporation - 5

Answer	
Document Name	
Comment	
Request R6.2 allow for 90 days instead of 60 so proper work can be completed. With a more detailed analysis being required, there is a higher chance of disagreement with a third party reviewer, requiring more time needed for response.	
Likes 0	
Dislikes 0	
Response	
Hillary Creurer - Allete - Minnesota Power, Inc. - 1	
Answer	
Document Name	
Comment	
Minnesota Power supports MRO-NSRF and EEI's comments.	
Likes 0	
Dislikes 0	
Response	
David Jendras Sr - Ameren - Ameren Services - 3	
Answer	
Document Name	
Comment	
Ameren supports EEI's comments on this project.	
Likes 0	
Dislikes 0	
Response	
Kristine Martz - Edison Electric Institute - NA - Not Applicable - NA - Not Applicable	
Answer	
Document Name	

Comment
For efficiency and to avoid revising CIP-014-4 as part of project 2021-03, please consider coordinating with project 2021-03 to edit the IROL wording in CIP-014 now as part of project 2023-06. Please consider revising Attachment 1, item 3: “3. Transmission Facilities at a single station or substation location that are identified by its Reliability Coordinator, Planning Coordinator, or Transmission Planner as critical to the derivation of Interconnection Reliability Operating Limits (IROLs) and their associated contingencies.” to read as, “3. Transmission Facilities at a single station or substation location that are identified by its Planning Coordinator or Transmission Planner, per its Planning Assessment of the Near-Term Transmission Planning Horizon as a Facility that if lost or degraded are expected to result in instances of instability, Cascading, or uncontrolled separation that adversely impacts the reliability of the Bulk Electric System for a planning event.”

Likes 0	
Dislikes 0	

Response

Stephen Stafford - Stephen Stafford On Behalf of: Greg Davis, Georgia Transmission Corporation, 1; - Stephen Stafford	
Answer	
Document Name	

Comment
• The analysis criteria and the expectation for the TO to perform an analysis needs to be removed from this standard and addressed in TPL space. This and the inclusion of more prescriptive study criteria (in the correct standard category) mitigates the need for third-party verification of the analysis. • Currently the third-party verifications referenced in the standard are not subject to NERC requirements. An assessment could receive favorable third-party verification but still not meet the requirements of the standard in the opinion of a regulatory entity. • R8 – R10 may require modification in response to stated comments on R3 & R5.

Likes 0	
Dislikes 0	

Response

Selene Willis - Edison International - Southern California Edison Company - 5	
Answer	
Document Name	

Comment
See comments submitted by the Edison Eclectic Institute

Likes 0	
Dislikes 0	
Response	
Ruida Shu - Northeast Power Coordinating Council - 1,2,3,4,5,6,7,8,9,10 - NPCC, Group Name NPCC RSC	
Answer	
Document Name	
Comment	
Request R6.2 allow for 90 days instead of 60 so proper work can be completed. With a more detailed analysis being required, there is a higher chance of disagreement with a third party reviewer, requiring more time needed for response.	
Likes 0	
Dislikes 0	
Response	
Daniel Gacek - Exelon - 1, Group Name Exelon	
Answer	
Document Name	
Comment	
For efficiency and to avoid revising CIP-014-4 as part of project 2021-03, please consider coordinating with project 2021-03 to edit the IROL wording in CIP-014 now as part of project 2023-06.	
Likes 0	
Dislikes 0	
Response	
Dwanique Spiller - Berkshire Hathaway - NV Energy - 5	
Answer	
Document Name	
Comment	
NV Energy supports EEI’s additional comment response.	
Likes 0	

Dislikes 0	
Response	
Bobbi Welch - Midcontinent ISO, Inc. - 2	
Answer	
Document Name	
Comment	
MISO notes that expanding R2 to encompass “Transmission substation(s) in proximity to those identified in Requirement R1, *irrespective of ownership*” introduces a timing issue that must be addressed in verifying CIP-014 risk assessments. As CIP-014 requires risk assessment verifications to be complete within 90 calendar days (pursuant to CIP-014, Part 6.2), MISO asks the SDT to establish a timeline by which entities owning proximate substations are required to respond to communications from Transmission Owners and unaffiliated third parties performing risk assessments. This will ensure information is provided in a timely manner as at least some owners of proximate substations will not otherwise be subject to CIP-014.	
Likes 0	
Dislikes 0	
Response	
Michael Jang - Seattle City Light - 1	
Answer	
Document Name	
Comment	
In agreement and support of SCL SME's additional comments: With the changes to R3 providing more explicit direction on how to perform the risk assessment, 3rd party verification seems unnecessary, so R6 can be eliminated. It wasn’t clear that the 3rd party verifications were effective in the first place. If R6 is maintained, the first sentence of R6.1 and of R6.3 are incomplete and should be rewritten.	
Likes 0	
Dislikes 0	
Response	
Chris Shultz - Seattle City Light - 5	
Answer	
Document Name	

Comment
With the changes to R3 providing more explicit direction on how to perform the risk assessment, 3rd party verification seems unnecessary, so R6 can be eliminated. It wasn't clear that the 3rd party verifications were effective in the first place. If R6 is maintained, the first sentence of R6.1 and of R6.3 are incomplete and should be rewritten.

Likes 0	
Dislikes 0	

Response

Stephanie Kenny - Edison International - Southern California Edison Company - 6	
Answer	
Document Name	

Comment
See EEI comments

Likes 0	
Dislikes 0	

Response

Robert Jones - Seattle City Light - 4	
Answer	
Document Name	

Comment
With the changes to R3 providing more explicit direction on how to perform the risk assessment, 3rd party verification seems unnecessary, so R6 can be eliminated. It wasn't clear that the 3rd party verifications were effective in the first place. If R6 is maintained, the first sentence of R6.1 and of R6.3 are incomplete and should be rewritten.

Likes 0	
Dislikes 0	

Response

Daren Brubaker - Seattle City Light - 6	
Answer	
Document Name	

Comment
With the changes to R3 providing more explicit direction on how to perform the risk assessment, 3rd party verification seems unnecessary, so R6 can be eliminated. It wasn't clear that the 3rd party verifications were effective in the first place. If R6 is maintained, the first sentence of R6.1 and of R6.3 are incomplete and should be rewritten.

Likes 0	
Dislikes 0	

Response

Gail Elliott - Gail Elliott On Behalf of: Michael Moltane, International Transmission Company Holdings Corporation, 1; - Gail Elliott	
Answer	
Document Name	

Comment
ITC supports both the additional comments of EEI and MRO NSRF.

Likes 0	
Dislikes 0	

Response

Amy Wesselkamper - PNM Resources - Public Service Company of New Mexico - 3	
Answer	
Document Name	

Comment
PNM and TNMP support EEI additional comments, noted again here. Additionally, a **SAR** should be considered to revise CIP-014-4 R6 to allow additional time for third party verification, especially if prescriptive study criteria are not included in the standard. *"For efficiency and to avoid revising CIP-014-4 as part of project 2021-03, please consider coordinating with project 2021-03 to edit the IROL wording in CIP-014 now as part of project 2023-06. Please consider revising Attachment 1, item 3: "3. Transmission Facilities at a single station or substation location that are identified by its Reliability Coordinator, Planning Coordinator, or Transmission Planner as critical to the derivation of Interconnection Reliability Operating Limits (IROLs) and their associated contingencies." to read as, "3. Transmission Facilities at a single station or substation location that are identified by its Planning Coordinator or Transmission Planner, per its Planning Assessment of the Near-Term Transmission Planning Horizon as a Facility that if lost or degraded are expected to result in instances of instability, Cascading, or uncontrolled separation that adversely impacts the reliability of the Bulk Electric System for a planning event."*

Likes 0	
Dislikes 0	

Response

Zenon O'young-Chu - Seattle City Light - 3	
Answer	
Document Name	
Comment	
With the changes to R3 providing more explicit direction on how to perform the risk assessment, 3rd party verification seems unnecessary, so R6 can be eliminated. It wasn't clear that the 3rd party verifications were effective in the first place. If R6 is maintained, the first sentence of R6.1 and of R6.3 are incomplete and should be rewritten.	
Likes 0	
Dislikes 0	
Response	
Jason Snodgrass - Jason Snodgrass On Behalf of: Katrina Lyons, Georgia System Operations Corporation, 3, 4; - Jason Snodgrass	
Answer	
Document Name	
Comment	
GSOC supports comments provided by Georgia Transmission	
Likes 0	
Dislikes 0	
Response	
Steven Rueckert - Western Electricity Coordinating Council - 10, Group Name WECC Entity Monitoring	
Answer	
Document Name	
Comment	
WECC voted negative on the non-binding poll for various reasons identified in the comments below. WECC appreciates the efforts to improve reliability and security by the changes proposed. Although the changes may be considered significant (both the original language and language proposed), the risk is real and the threat vectors continue to increase. WECC supports the direction but clarity around the language will help ensure consistent application of the Requirements. We propose that the language regarding "line of sight" and "ease of access to a common public roadway" should provide more detailed and specific guidelines to clearly define how entities can achieve security AND compliance. Providing expectations and requirements will not only help entities understand the necessary steps and measures needed to meet the Standard but also ensure consistency across CMEP teams. This approach will help avoid the development of varying audit approaches and interpretations, leading to a more uniform and fair audit. Reliability and security should be considered foundational attributes of the electrical grid and	

achieving the level commensurate with the risk is probably viewed differently across the industry. Events that may be avoided through effective risk mitigation should be a goal of this project.

Capitalize “control center” in the Purpose statement. Extra period at end of Requirement R2 needs removed. Requirement 6 in the red-lined version is different than the Requirement 6 language in the clean version. The clean version has additional language in Requirement 6.1 and 6.3 that was moved to Requirement 9. Updated Requirement 6.2 needs to change “R1” to “R5” in first sentence referencing the performance of the risk assessment. Should “Control Center” be added to Requirement 6.2 and 6.3 as the deletion/addition of a Transmission station or Transmission substation could affect Control Center identification? Consider adding “as critical” after “its identification” to provide clarity in Requirement 6.3. Measure M6 should only reference R5 identification and not any additional modifications as the third-party is only verifying the R5 risk assessment and not the list of Transmission station(s) and Transmission substation(s). If the intent is to verify all applicable Transmission station(s) and Transmission substation(s) called out in R1, R2 (unless subsumed- see previous comments), and R4 then language needs added to Requirement R6 to allow such a change. R7 needs to capitalize “control center” as discussed previously. Use NERC defined terms for clarity and consistency. Requirement R7.1 should only reference R5 not “R1, R2, R3, R4 and R5” as R5 is where Transmission station(s) and Transmission substation(s) are identified (suggest adding “as critical” as well here to be clear) through the risk assessment being verified. Requirement R7.1 incorrectly references R1 (should be R5) and incorrect changed R2 to R5 when that reference should be R6 (verification by third-party). Capitalize “control center” in R8. Need to correctly reference E-ISAC by changing “the Electricity Sector Information Sharing and Analysis Center (ES-ISAC” to “the Electricity Information Sharing and Analysis Center (E-ISAC)” in R8. Capitalize “control center” in R9. Measure M9 needs to reference Requirement R9 not Requirement R6.

Evidence retention should mirror the periodicity or go beyond the periodicity of the Requirement language (e.g. 36 calendar months not 3 years).

VSL header needs to change reference to CIP-014-4 not “-3”. VSL language for R1 reflects “calendar months” but Requirement R1 language simply says “months”. VSL language for R1 misses the inclusion of R4 in terms of applicable Transmission station(s) and Transmission substation(s). Furthermore, the VSL should not delve into a percentage missing as the only way an auditor could determine that is a complete list of all Transmission station(s) or Transmission substation(s) be provided (including those in close proximity per R2 and “jointly owned” in R4). The percentage basically indicates a reperformance by CMEP staff in the determination of applicable Transmission station(s) and Transmission substation(s). RSAW may provide an internal control question to have the entity show how it ensures inclusion. Certainly the entity should have a list of all Transmission stations and Transmission substations with an inventory of fully owned and those stations where partial ownership exists. As for the proximity of substations, clear indication of why they were included should be maintained. Verification of proximity from a compliance perspective may require review of internal controls coupled with site visits or use of Google Earth (as an example).

High VSL for R2 should not use the term “insufficient”. There are 3 criterion listed in R2 so consider indicating the missing of one of the three required criterion as basis for High VSL.

VSLs for Requirement R3 may need to change if formatting suggestion is applied (note R3.3. says ”Analysis of fault simulations, as follows: “and R3.4 and R3.5 should be sub bullets of R3.3).

R4 VSLs do not correspond with Requirement R4 language (no risk assessment performed in R4, no subparts of R4). Should reference the failure to coordinate at least once every 36 months in some manner. Consider keeping the first part of each VSL but replace “performed a risk assessment” to “did not coordinate to determine and identify responsibilities associated with required risk assessments but did so after …..” Additionally, R4 is not bulleted so unclear what the DT is trying to reference here for R4.

R5 VSLs may need to address references to R3 parts if formatting is corrected in R3. Additionally, R4 is not bulleted so unclear what the DT is trying to reference here for R4.

R6 VSLs need some adjustments. Consider the following:

R6 Lower VSL-“The Transmission Owner had an unaffiliated third party verify the risk assessment performed under Requirement R4R5, but did so in more than 90 calendar days, but less than or equal to 100 calendar days following completion of Requirement R4R5. OR The Transmission Owner had an unaffiliated third party verify the risk assessment performed under Requirement R4R5 and modified or documented the technical basis for not modifying its identification under Requirement R4R5 as required by Part 6.35.2 but did so more than 60 calendar days and less than or equal to 70 calendar days from completion of the third party verification.”

Moderate VSL--“The Transmission Owner had an unaffiliated third party verify the risk assessment performed under Requirement R4R5, but did so in more than 100 calendar days, but less than or equal to 110 calendar days following completion of Requirement R4R5. OR The Transmission Owner

had an unaffiliated third party verify the risk assessment performed under Requirement R4R5 and modified or documented the technical basis for not modifying its identification under Requirement R4R5 as required by Part 6.35.2, but did so more than 70 calendar days and less than or equal to 80 calendar days from completion of the third party verification."

High VSL-"The Transmission Owner had an unaffiliated third party verify the risk assessment performed under Requirement R4R5, but did so in more than 110 calendar days, but less than or equal to 120 calendar days following completion of Requirement R4R5. OR The Transmission Owner had an unaffiliated third party verify the risk assessment performed under Requirement R4R5 and modified or documented the technical basis for not modifying its identification under Requirement R4 as required by Part 6.35.2, but did so more than 80 calendar days from completion of the third party verification. OR The Transmission Owner had an unaffiliated third party verify the risk assessment performed under Requirement R4R5, but failed to modify or document the technical basis for not modifying its identification under R4R5 as required by Part 6.35.2."

Severe VSL-"The Transmission Owner had an unaffiliated third party verify the risk assessment performed under Requirement R4R5, but did so more than 120 calendar days following completion of Requirement R4R5. OR The Transmission Owner failed to have an unaffiliated third party verify the risk assessment performed under Requirement R4R5. OR The Transmission Owner had an unaffiliated third party verify the risk assessment performed under Requirement R4R5, but failed to implement procedures for protecting information per Part 6.45.2."

R7 VSLs should reference R7 not R6 (R6 shown as replacement for R3) or alternatively say "…as identified in Requirement R5 but…" or alternatively say "…as verified in Requirement R6.." instead of "as specified in Requirement R63 but.." Additionally, later in the VSLs, change the Requirement R1 to R5 (versus R4).

R8 VSLs-Responsible Entity is not defined. Understand the desire to avoid repeating TO and/or TOP. Consider lower-casing the use of the term in the VSLs. Change the Requirement R1 reference to R5 (versus R4). The VSLs should reference Parts 8.1 through 8.3 versus 7.1 through 7.3.

R9 VSLs- -Responsible Entity is not defined. Understand the desire to avoid repeating TO and/or TOP. Consider lower-casing the use of the term in the VSLs. Change the Requirement R1 reference to R5 (missed it completely in the Lower VSL while others reference Requirement R4.) It appears that the development and implementation should not occur until after verification in Requirement R6 versus Requirement R5 as referenced in all the VSLs. Change the "verified according to Requirement" to Requirement R6 versus R5 (all VSLs). Requirement R8 references should be changed to Requirement R9. Just to be clear the Technical Rational should indicate the TO is responsible for the Transmission station(s) and Transmission substation(s) while the TOP is responsible for the Control Center—VSLs language could confuse registered entities.

Requirement R9 should consider "initiated" versus "implemented" as "implemented" and "executed" may be considered synonymous.

R10 VSLs Requirement R7 and R8 references need updated to reflect Requirement language. Change R7 to R8 and R8 to R9 as the evaluation is performed in R8 and the security plan is developed in R9 (all VSLs). Requirement R9.3 reference should change to Requirement R10.3 (all VSLs). Requirement R9.4 reference should be changed to Requirement R10.4 (Severe VSL).

Likes 0	
Dislikes 0	

Response

Chris Wagner - Santee Cooper - 1, Group Name Santee Cooper

Answer	
Document Name	

Comment

The Standard or technical rationale document should provide more clarity on the type of physical attack event. This would help determine what type of physical security is needed to prevent/mitigate the risk of the event. More clarification on the type of event would help entities define what type of fault event to use for the risk assessment as well as potential physical security actions if needed should a station or stations be identified in the risk assessment and require additional protection.

Likes 0	
Dislikes 0	

Response

Jodirah Green - ACES Power Marketing - 1,3,4,5,6 - MRO,WECC,Texas RE,SERC,RF, Group Name ACES Collaborators

Answer	
Document Name	

Comment

We would like to thank the SDT for their hard work and allowing us to comment.

Likes 0	
Dislikes 0	

Response

NERC
NORTH AMERICAN ELECTRIC RELIABILITY CORPORATION

Consideration of Comments

Project Name:	2023-06 CIP-014 Risk Assessment Refinement | Draft 1
Comment Period Start Date:	5/20/2024
Comment Period End Date:	7/3/2024
Associated Ballot(s):	Project 2023-06 CIP-014 Risk Assessment Refinement CIP-014-4 | Non-Binding Poll IN 1 NB Project 2023-06 CIP-014 Risk Assessment Refinement CIP-014-4 IN 1 ST Project 2023-06 CIP-014 Risk Assessment Refinement Implementation Plan IN 1 OT

There were 75 sets of responses, including comments from approximately 176 different people from approximately 102 companies representing 10 of the Industry Segments as shown in the table on the following pages.

All comments submitted can be reviewed in their original format on the project page.

If you feel that your comment has been overlooked, let us know immediately. Our goal is to give every comment serious consideration in this process. If you feel there has been an error or omission, contact Manager of Standards Information, Nasheema Santos (via email) or at (404) 290-6796.

Questions

1. **Do you agree with the modification in "Applicability" by moving 4.1.1 to Attachent1?**

2. **Do you agree with the modifications made in CIP-014-4 with modified Requirement R1 to address the issues identified in the SAR?**

3. **Do you agree with the modifications made in CIP-014-4 with new Requirement R2 to address the issues identified in the SAR?**

4. **Do you agree with the modifications made in CIP-014-4 with new Requirement R3 to address the issues identified in the SAR?**

5. **Do you agree with the modifications made in CIP-014-4 with new Requirement R4 to address the issues identified in the SAR?**

6. **Do you agree with the modifications made in CIP-014-4 with adding Requirement R5 to address the issues identified in the SAR?**

7. **Do you agree with the Implementation Plan for CIP-014-4?**

8. **Do you agree that CIP-014-4 is cost effective to address the reliability issue of physical security? If no, why not?**

9. **Provide any additional comments for the standard drafting team to consider, if desired.**

The Industry Segments are:

1 — Transmission Owners
2 — RTOs, ISOs
3 — Load-serving Entities
4 — Transmission-dependent Utilities
5 — Electric Generators
6 — Electricity Brokers, Aggregators, and Marketers
7 — Large Electricity End Users
8 — Small Electricity End Users
9 — Federal, State, Provincial Regulatory or other Government Entities
10 — Regional Reliability Organizations, Regional Entities

Organization Name	Name	Segment(s)	Region	Group Name	Group Member Name	Group Member Organization	Group Member Segment(s)	Group Member Region
MRO	Anna Martinson	1,2,3,4,5,6	MRO	MRO Group	Shonda McCain	Omaha Public Power District (OPPD)	1,3,5,6	MRO
					Michael Brytowski	Great River Energy	1,3,5,6	MRO
					Jamison Cawley	Nebraska Public Power District	1,3,5	MRO
					Jay Sethi	Manitoba Hydro (MH)	1,3,5,6	MRO
					Husam Al-Hadidi	Manitoba Hydro (System Preformance)	1,3,5,6	MRO
					Kimberly Bentley	Western Area Power Adminstration	1,6	MRO
					Jaimin Patal	Saskatchewan Power Coporation (SPC)	1	MRO
					George Brown	Pattern Operators LP	5	MRO
					Larry Heckert	Alliant Energy (ALTE)	4	MRO

					Terry Harbour	MidAmerican Energy Company (MEC)	1,3	MRO
					Dane Rogers	Oklahoma Gas and Electric (OG&E)	1,3,5,6	MRO
					Seth Shoemaker	Muscatine Power & Water	1,3,5,6	MRO
					Michael Ayotte	ITC Holdings	1	MRO
					Andrew Coffelt	Board of Public Utilities- Kansas (BPU)	1,3,5,6	MRO
					Peter Brown	Invenergy	5,6	MRO
					Angela Wheat	Southwestern Power Administration	1	MRO
					Bobbi Welch	Midcontinent ISO, Inc.	2	MRO
Public Utility District No. 1 of Chelan County	Anne Kronshage	6		Public Utility District No. 1 of Chelan County - Voting Group	Anne Kronshage	Public Utility District No. 1 of Chelan County	6	WECC
					Diane Landry	Public Utility District No. 1 of Chelan County	1	WECC
					Rebecca Zahler	Public Utility District No. 1 of Chelan County	5	WECC

					Joyce Gundry	Public Utility District No. 1 of Chelan County	3	WECC
Tennessee Valley Authority	Brian Millard	1,3,5,6	SERC	TVA RBB	Ian Grant	Tennessee Valley Authority	3	SERC
					David Plumb	Tennessee Valley Authority	1	SERC
					Armando Rodriguez	Tennessee Valley Authority	6	SERC
					Nehtisha Rollis	Tennessee Valley Authority	5	SERC
Santee Cooper	Chris Wagner	1		Santee Cooper	John Abrams	Santee Cooper	1,3,5,6	SERC
					Weijian Cong	Santee Cooper	1,3,5,6	SERC
					Rene' Free	Santee Cooper	1,3,5,6	SERC
					Stephen Lowe	Santee Cooper	1,3,5,6	SERC
					Christie Pope	Santee Cooper	1,3,5,6	SERC
Exelon	Daniel Gacek	1		Exelon	Daniel Gacek	Exelon	1	RF
					Kinte Whitehead	Exelon	3	RF
Manitoba Hydro	Jay Sethi	1,3,5,6	MRO	Manitoba Hydro Group	Nazra Gladu	Manitoba Hydro	1	MRO
					Mike Smith	Manitoba Hydro	3	MRO
					Kristy-Lee Young	Manitoba Hydro	5	MRO
					Kelly Bertholet	Manitoba Hydro	6	MRO

Jennie Wike	Jennie Wike		WECC	Tacoma Power	Jennie Wike	Tacoma Public Utilities	1,3,4,5,6	WECC
					John Merrell	Tacoma Public Utilities (Tacoma, WA)	1	WECC
					John Nierenberg	Tacoma Public Utilities (Tacoma, WA)	3	WECC
					Hien Ho	Tacoma Public Utilities (Tacoma, WA)	4	WECC
					Terry Gifford	Tacoma Public Utilities (Tacoma, WA)	6	WECC
					Ozan Ferrin	Tacoma Public Utilities (Tacoma, WA)	5	WECC
ACES Power Marketing	Jodirah Green	1,3,4,5,6	MRO,RF,SERC,Texas RE,WECC	ACES Collaborators	Bob Soloman	Hoosier Energy Electric Cooperative	1	RF
					Jennifer Bray	Arizona Electric Power Cooperative, Inc.	1	WECC
Eversource Energy	Joshua London	1		Eversource	Joshua London	Eversource Energy	1	NPCC
					Vicki O'Leary	Eversource Energy	3	NPCC

FirstEnergy - FirstEnergy Corporation	Mark Garza	4		FE Voter	Julie Severino	FirstEnergy - FirstEnergy Corporation	1	RF
					Aaron Ghodooshim	FirstEnergy - FirstEnergy Corporation	3	RF
					Robert Loy	FirstEnergy - FirstEnergy Solutions	5	RF
					Mark Garza	FirstEnergy-FirstEnergy	1,3,4,5,6	RF
					Stacey Sheehan	FirstEnergy - FirstEnergy Corporation	6	RF
Austin Energy	Michael Dillard	5		Austin Energy	Michael Dillard	Austin Energy	5	Texas RE
					Lovita Griffin	Austin Energy	3	Texas RE
					Tony Hua	Austin Energy	4	Texas RE
					Imane Mrini	Austin Energy	6	Texas RE
					Thomas Standifur	Austin Energy	1	Texas RE
Black Hills Corporation	Rachel Schuldt	6		Black Hills Corporation - All Segments	Micah Runner	Black Hills Corporation	1	WECC
					Josh Combs	Black Hills Corporation	3	WECC
					Rachel Schuldt	Black Hills Corporation	6	WECC

					Carly Miller	Black Hills Corporation	5	WECC
					Sheila Suurmeier	Black Hills Corporation	5	WECC
Northeast Power Coordinating Council	Ruida Shu	1,2,3,4,5,6,7,8,9,10	NPCC	NPCC RSC	Gerry Dunbar	Northeast Power Coordinating Council	10	NPCC
					Deidre Altobell	Con Edison	1	NPCC
					Michele Tondalo	United Illuminating Co.	1	NPCC
					Stephanie Ullah-Mazzuca	Orange and Rockland	1	NPCC
					Michael Ridolfino	Central Hudson Gas & Electric Corp.	1	NPCC
					Randy Buswell	Vermont Electric Power Company	1	NPCC
					James Grant	NYISO	2	NPCC
					Dermot Smyth	Con Ed - Consolidated Edison Co. of New York	1	NPCC
					David Burke	Orange and Rockland	3	NPCC
					Peter Yost	Con Ed - Consolidated	3	NPCC

	Edison Co. of New York		
Salvatore Spagnolo	New York Power Authority	1	NPCC
Sean Bodkin	Dominion - Dominion Resources, Inc.	6	NPCC
David Kwan	Ontario Power Generation	4	NPCC
Silvia Mitchell	NextEra Energy - Florida Power and Light Co.	1	NPCC
Sean Cavote	PSEG	4	NPCC
Jason Chandler	Con Edison	5	NPCC
Tracy MacNicoll	Utility Services	5	NPCC
Shivaz Chopra	New York Power Authority	6	NPCC
Vijay Puran	New York State Department of Public Service	6	NPCC
David Kiguel	Independent	7	NPCC
Joel Charlebois	AESI	7	NPCC
Joshua London	Eversource Energy	1	NPCC
Nicolas Turcotte	Hydro-Quebec (HQ)	1	NPCC

					Jeffrey Streifling	NB Power Corporation	1,4,10	NPCC
					Joel Charlebois	AESI	7	NPCC
					John Hastings	National Grid	1	NPCC
					Erin Wilson	NB Power	1	NPCC
					James Grant	NYISO	2	NPCC
					Michael Couchesne	ISO-NE	2	NPCC
					Kurtis Chong	IESO	2	NPCC
					Michele Pagano	Con Edison	4	NPCC
					Bendong Sun	Bruce Power	4	NPCC
					Carvers Powers	Utility Services	5	NPCC
					Wes Yeomans	NYSRC	7	NPCC
Dominion - Dominion Resources, Inc.	Sean Bodkin	6		Dominion	Connie Lowe	Dominion - Dominion Resources, Inc.	3	NA - Not Applicable
					Lou Oberski	Dominion - Dominion Resources, Inc.	5	NA - Not Applicable
					Larry Nash	Dominion - Dominion Virginia Power	1	NA - Not Applicable
					Rachel Snead	Dominion - Dominion Resources, Inc.	5	NA - Not Applicable

Western Electricity Coordinating Council	Steven Rueckert	10		WECC Entity Monitoring	Steve Rueckert	WECC	10	WECC
					Curtis Crews	WECC	10	WECC
Tim Kelley	Tim Kelley		WECC	SMUD and BANC	Nicole Looney	Sacramento Municipal Utility District	3	WECC
					Charles Norton	Sacramento Municipal Utility District	6	WECC
					Wei Shao	Sacramento Municipal Utility District	1	WECC
					Foung Mua	Sacramento Municipal Utility District	4	WECC
					Nicole Goi	Sacramento Municipal Utility District	5	WECC
					Kevin Smith	Balancing Authority of Northern California	1	WECC

1. Do you agree with the modification in “Applicability” by moving 4.1.1 to Attachent1?	
Jessica Cordero - Unisource - Tucson Electric Power Co. - 1	
Answer	No
Document Name	
Comment	
Moving “Applicability” is acceptable. But new addition of Applicability 2.1 needs further clarification on physical adjacency in the Applicability. Would like clarification on applicability, does any station below 200kV need to be included in proximity check? Ties in with R2.	
Likes 0	
Dislikes 0	
Response	
Thank you for your comment. Please see revised Standard and hopefully your concern has been addressed.	
Richard Jackson - U.S. Bureau of Reclamation - 1	
Answer	No
Document Name	
Comment	
Reclamation recommends leaving “Applicability” in 4.1.1 and not creating an “Attachment 1” as it does not follow the flow of most Standards currently in use and may cause confusion.	
Likes 0	
Dislikes 0	
Response	
Thank you for your comment.	

Matt Carden - Southern Company - Southern Company Services, Inc. - 1	
Answer	No
Document Name	
Comment	
Southern Company disagrees with the inclusion of Attachment 1 (2.1) in the proposed standard. Requirement R2 addresses the need to provide clear expectations regarding the inclusion of physically adjacent elements in the risk assessment. However, the SAR did not identify a need to modify applicability.	
Likes 0	
Dislikes 0	
Response	
Thank you for your comment. Please see revised Standard and hopefully your concern has been addressed.	
Kevin Conway - Western Power Pool - 4	
Answer	No
Document Name	
Comment	
Changing the Functional Entity description and moving it to Attachment 1, then requiring each TO to maintain a list of facilities identified in Attachment 1 complicates compliance for smaller TOs. Specifically, smaller TOs which do not operate facilities listed in Attachment 1 must maintain null lists and represents a compliance risk due to the administration of these lists. During compliance audits, auditors will use subjective judgement as to how the lists should look, how frequently they should be updated/reviewed/maintained, and who is ultimately responsible in the organization to ensure that they are correct. Entities will be expected to have multiple compliance controls in place to ensure the null lists are created, reviewed, approved and properly managed. During compliance audits R1, in relation to the movement of the Functional Entity description, will result in zero defect compliance. Entities will have risks related to the fact that they didn't feel a null list is appropriate and necessary to verify they have no assets that qualify under this standard.	

The movement of the Functional Entity description further complicates compliance whereby the entity now must dig through the standard to determine its applicability, rather than simply looking at the Applicability Section of the standard.	
Likes 0	
Dislikes 0	
Response	
Transmission Owner that owns a Transmission station or Transmission substation that meets the criteria of Attachment 1	
Jennie Wike - Jennie Wike On Behalf of: John Merrell, Tacoma Public Utilities (Tacoma, WA), 1, 4, 5, 6, 3; - Jennie Wike, Group Name Tacoma Power	
Answer	No
Document Name	
Comment	
Tacoma Power supports the MRO NSRF comments, as follows. The MRO NSRF agrees with moving the Applicability criteria into an Attachment 1. However, the MRO NSRF recommends removing Criterion 2.1 from Attachment 1. The Project 2023-06 SAR asked to revise the risk assessment to account for adjacent substations, but did not ask for changes to the applicable Facilities. Further, the NERC Report titled, "Evaluation of the Physical Security Reliability Standard and Physical Security Attacks to the Bulk-Power System," concluded that "…based on available data, the Applicability criteria in Reliability Standard CIP-014-3 appears to adequately identify the subset of all transmission stations and substations that TOs should evaluate as part of the Requirement R1 risk assessments." In addition, Criterion 2.1 creates a scenario whereby one entity could identify that it has an applicable substation when considered in aggregate with a different entity's substation down the street. That other entity may have different proximity criteria and therefore not consider its substation applicable, when the intent, as drafted, appears to be that both substations would be considered applicable.	
Likes 0	
Dislikes 0	

Response	
Thank you for your comment. Please see revised Standard and hopefully your concern has been addressed.	
Anna Martinson - MRO - 1,2,3,4,5,6 - MRO, Group Name MRO Group	
Answer	No
Document Name	
Comment	

The MRO NSRF agrees with moving the Applicability criteria into an Attachment 1.

However, the MRO NSRF recommends removing Criterion 2.1 from Attachment 1. The Project 2023-06 SAR asked to revise the risk assessment to account for adjacent substations, but did not ask for changes to the applicable Facilities. Further, the NERC Report titled, "Evaluation of the Physical Security Reliability Standard and Physical Security Attacks to the Bulk-Power System," concluded that "…based on available data, the Applicability criteria in Reliability Standard CIP-014-3 appears to adequately identify the subset of all transmission stations and substations that TOs should evaluate as part of the Requirement R1 risk assessments."

In addition, Criterion 2.1 creates a scenario whereby one entity could identify that it has an applicable substation when considered in aggregate with a different entity's substation down the street. That other entity may have different proximity criteria and therefore not consider its substation applicable, when the intent, as drafted, appears to be that both substations would be considered applicable.

Likes 1	Lincoln Electric System, 1, Johnson Josh
Dislikes 0	

Response	
Thank you for your comment. Please see revised Standard and hopefully your concern has been addressed.	
Brian Millard - Tennessee Valley Authority - 1,3,5,6 - SERC, Group Name TVA RBB	
Answer	No
Document Name	
Comment	

TVA disagrees with the modifications to the “Applicability” section based on the changes made to criterion 2.1 in Attachment 1. TVA has two fundamental disagreements with this criterion:

1. Nonapplicable facilities should remain nonapplicable and not be subject evaluation in aggregate based on physical location or the other criteria outlined in R2. No evidence or basis in fact is provided to justify an event type that would trigger the consideration of two (2) individual facilities as a single facility.
2. TVA also disagrees with the changes to R2, on which aggregate facility evaluation is based, with the belief that additional clarification is required on the definition and application of “proximity”.

The requirement to evaluate facilities for applicability in aggregate should be removed from the standard or additional clarifications to R2 should be provided as outlined by TVA.

Likes 0	
Dislikes 0	

Response

Thank you for your comment. Please see revised Standard and hopefully your concern has been addressed.

Alan Kloster - Alan Kloster On Behalf of: Jeremy Harris, Evergy, 3, 5, 1, 6; Kevin Frick, Evergy, 3, 5, 1, 6; Marcus Moor, Evergy, 3, 5, 1, 6; Tiffany Lake, Evergy, 3, 5, 1, 6; - Alan Kloster

Answer	No
Document Name	

Comment

Evergy supports and incorporates by reference the comments of the Edison Electric Insitute (EEI) and MRO NSRF for question #1.

Likes 0	
Dislikes 0	

Response

Thank you for your comments. Please see EEI and MRO NSRF comment responses	
Leshel Hutchings - AEP - 3	
Answer	No
Document Name	
Comment	

We are not opposed to the Applicability section moving to 4.1.1 to Attachment 1, however additional changes were made to the Applicability section which should be stricken.

Bullet 2.1 "*Transmission station(s) or Transmission substation(s), that individually are not applicable, but are applicable when combined based on physical adjacency per Requirement R2, based on aggregated weighting value criteria from Table 1 are to be considered as applicable*" should be entirely removed. The content of the Applicability section should be unchanged with this SAR, which has a focused scope on the R1 risk assessment.

Bullet 2.1 would add excessive compliance burden, for both large and small TOs, while explicitly targeting an incredibly small risk. Previously, applicability scoring could be done first. Then small TOs with no applicable stations did not have to proceed with burdensome, manual, or time-consuming evaluations of proximity at all. Large TOs could proceed with detailed evaluations of proximity on the smaller applicable list. 2.1 would require a proximity screening to be performed on every 200 kV+ station on an entity's footprint to even determine the applicable list. This also opens the door for an auditor who takes issue with an entity's technical rationale for proximity to take issue with the entire applicability list.

Additionally, Applicability Section 4.1.1.1 through 4.1.1.4 mirror those Transmission Facilities that meet the bright line criteria for "Medium Impact" Transmission Facilities under Attachment 1 of Reliability Standard CIP-002- 5.1. Modifying the Applicability section would cause unnecessary inconsistency between these aligned standards.

Likes 0	
Dislikes 0	
Response	
Thank you for your comment. Please see revised Standard and hopefully your concern has been addressed.	

Cain Braveheart - Bonneville Power Administration - 1,3,5,6 - WECC	
Answer	No
Document Name	
Comment	
BPA believes it is less of a compliance documentation burden for Registered Entities to determine exemption at the Section 4 level versus complying with R1, and having to document that compliance, in order to determine the rest of the requirements do not apply. BPA understands the original intent of CIP-014 was to identify a very small number of the absolutely most critical substations. BPA asserts that requiring Registered Entities to go through the R1 exercise in order to determine they are exempt is contrary to the original intent of the standard.	
Likes 0	
Dislikes 0	
Response	
Transmission Owner that owns a Transmission station or Transmission substation that meets the criteria of Attachment 1	
Karen Demos - NextEra Energy - Florida Power and Light Co. - 3	
Answer	No
Document Name	
Comment	
NextEra/FPL supports EEI's comments	
Likes 0	
Dislikes 0	
Response	
Thank you for your comments. Please see EEI comment responses	

Ben Hammer - Western Area Power Administration - 1	
Answer	No
Document Name	
Comment	
WAPA agrees with moving the Applicability criteria into an Attachment 1. WAPA concurs with the comments provided by the MRO NSRF and the elimination of Criteria 2.1.	
Likes 0	
Dislikes 0	
Response	
Thank you for your comments. Please see MRO NSRF comment responses	
Michael Dillard - Austin Energy - 5, Group Name Austin Energy	
Answer	No
Document Name	MRO-Tacoma CIP-014 comments.docx
Comment	
Austin Energy supports MRO's comments.	
Likes 0	
Dislikes 0	
Response	
Thank you for your comments. Please see MRO NSRF comment responses	
Richard Vendetti - NextEra Energy - 5	
Answer	No

Document Name	
Comment	
NEE support's EEI comments: " EEI supports moving 4.1.1 to Attachment 1, however, we disagree with the inclusion of, and suggest striking, criterion 2.1 in the Applicability section because it is outside of the scope of the SAR. The SAR asks the drafting team to provide clear expectations regarding the inclusion of physically adjacent elements for the purpose of evaluating the impact from a physical attack, but it does not require or request modifications to the applicability of the Standard or requirements. Multiple non-applicable stations within reasonable proximity should not be deemed applicable when considered as a whole. It is the presence of an applicable station that requires evaluation of a physical attack and the identification of additional stations that may be impacted. Further, criterion 2.1 includes a circular reference to Requirement R2 for Transmission station(s) or Transmission substation(s) that individually are not applicable when CIP-014-4 Requirement R1, Part 1.3 states that if the TO identified no applicable Transmission station(s) or Transmission substation(s) they are not required to fulfill the remainder of the standard, including Requirement R2. "	
Likes 0	
Dislikes 0	
Response	
Thank you for your comment. Please see revised Standard and hopefully your concern has been addressed.	
Donna Wood - Tri-State G and T Association, Inc. - 1	
Answer	No
Document Name	
Comment	
Tri-State agrees with the MRO NSRF Submitted Comments	
Likes 0	

Dislikes 0	
Response	
Thank you for your comments. Please see MRO NSRF comment response.	
Tim Kelley - Tim Kelley On Behalf of: Charles Norton, Sacramento Municipal Utility District, 3, 6, 4, 1, 5; Foung Mua, Sacramento Municipal Utility District, 3, 6, 4, 1, 5; Kevin Smith, Balancing Authority of Northern California, 1; Nicole Looney, Sacramento Municipal Utility District, 3, 6, 4, 1, 5; Ryder Couch, Sacramento Municipal Utility District, 3, 6, 4, 1, 5; Wei Shao, Sacramento Municipal Utility District, 3, 6, 4, 1, 5; - Tim Kelley, Group Name SMUD and BANC	
Answer	No
Document Name	
Comment	
SMUD agrees with the comments submitted by the MRO NSRF.	
Likes 0	
Dislikes 0	
Response	
Thank you for your comments. Please see MRO NSRF comment response.	
Rachel Schuldt - Black Hills Corporation - 6, Group Name Black Hills Corporation - All Segments	
Answer	No
Document Name	
Comment	
Black Hills Corporation agrees with moving 4.1.1 to Attachment 1. However, Black Hills Corporation aligns with EEI comments and disagrees with the inclusion of criterion 2.1 in the Applicability section as it creates a circular reference that brings in station(s)/substation(s) that are individually not applicable via Attachment 1, which is outside the scope of the SAR. Black Hills Corporation recommends striking criterion 2.1 from the Applicability section.	

Likes 0	
Dislikes 0	
Response	
Thank you for your comment. Please see revised Standard and hopefully your concern has been addressed.	
Ellese Murphy - Duke Energy - 1,3,5,6 - Texas RE,SERC,RF	
Answer	No
Document Name	
Comment	
Duke Energy supports EEI comments that disagree with the inclusion of criterion 2.1 in Attachment 1 and suggests striking it.	
Likes 0	
Dislikes 0	
Response	
Thank you for your comments. Please see EEI comment response.	
Sean Bodkin - Dominion - Dominion Resources, Inc. - 6, Group Name Dominion	
Answer	No
Document Name	
Comment	
Dominion Energy supports EEI comments.	
Likes 0	
Dislikes 0	
Response	

Thank you for your comments. Please see EEI comment response.	
Andrew Smith - APS - Arizona Public Service Co. - 5	
Answer	No
Document Name	
Comment	
AZPS supports moving 4.1.1 to Attachment 1, however agrees with EEI's comments which ask the SDT to provide clear expectations regarding the inclusion of physically adjacent elements for the purpose of evaluating the impact from a physical attack.	
Likes 0	
Dislikes 0	
Response	
Thank you for your comments. Please see EEI comment response.	
Devin Shines - PPL - Louisville Gas and Electric Co. - 1,3,5,6 - SERC,RF	
Answer	No
Document Name	
Comment	
Louisville Gas & Electric and Kentucky Utilities support EEI's comments.	
Likes 0	
Dislikes 0	
Response	
Thank you for your comments. Please see EEI comment response.	

Israel Perez - Israel Perez On Behalf of: Laura Somak, Salt River Project, 3, 6, 5, 1; Mathew Weber, Salt River Project, 3, 6, 5, 1; Thomas Johnson, Salt River Project, 3, 6, 5, 1; Timothy Singh, Salt River Project, 3, 6, 5, 1; - Israel Perez	
Answer	No
Document Name	
Comment	
SRP supports the MRO NSRF with Tacoma Power's comments.	
Likes 0	
Dislikes 0	
Response	
Thank you for your comments. Please see MRO NSRF comment response.	
Dave Krueger - SERC Reliability Corporation - 10	
Answer	No
Document Name	
Comment	
Thank you for the chance to comment, SERC appreciates the complexity of the SDT's task of modifying multiple parts of such a high-profile and high-priority standard. · Item #Applicability.A: We agree that moving the Applicability to Attachment 1 is effective and accommodates the changes in the new R1 and R2. However, we encourage the SDT to add an additional Transmission Substation applicability criterion similar to the existing CIP-002-5.1a Attachment 1 Criterion 2.8. Specifically, to add CIP-014-3 substation applicability for any Transmission substation/station which connects an aggregate of 1500MW or more generation to the BES. This stems from a field observation that it is not abnormal for substations below the	

499-200kV thresholds (which don't meet the line count to be included under CIP-014-4 Attachment 1, Criterion 2) to demonstrate stability impacts. Perhaps a field trial could identify the validity of their inclusion and if such a reliability gap exists.	
Likes 0	
Dislikes 0	
Response	
The Project 2023-06 Standard Drafting Team appreciates the comment, but the suggested addition is outside of the scope of the SAR.	
Hillary Creurer - Allete - Minnesota Power, Inc. - 1	
Answer	No
Document Name	
Comment	
Minnesota Power supports MRO-NSRF and EEI's comments.	
Likes 0	
Dislikes 0	
Response	
Thank you for your comments. Please see EEI and MRO NSRF comment responses.	
David Jendras Sr - Ameren - Ameren Services - 3	
Answer	No
Document Name	
Comment	
Ameren supports EEI's comments on this project.	

Likes 0	
Dislikes 0	

Response

Thank you for your comments. Please see EEI comment response.

Kristine Martz - Edison Electric Institute - NA - Not Applicable - NA - Not Applicable

Answer	No
Document Name	

Comment

EEI supports moving 4.1.1 to Attachment 1, however, we disagree with the inclusion of, and suggest striking, criterion 2.1 in the Applicability section because it is outside of the scope of the SAR. The SAR asks the drafting team to provide clear expectations regarding the inclusion of physically adjacent elements for the purpose of evaluating the impact from a physical attack, but it does not require or request modifications to the applicability of the Standard or requirements. Multiple non-applicable stations within reasonable proximity should not be deemed applicable when considered as a whole. It is the presence of an applicable station that requires evaluation of a physical attack and the identification of additional stations that may be impacted.

Further, criterion 2.1 includes a circular reference to Requirement R2 for Transmission station(s) or Transmission substation(s) that individually are not applicable when CIP-014-4 Requirement R1, Part 1.3 states that if the TO identified no applicable Transmission station(s) or Transmission substation(s) they are not required to fulfill the remainder of the standard, including Requirement R2.

Likes 0	
Dislikes 0	

Response

Thank you for your comment. Please see revised Standard and hopefully your concern has been addressed.

Stephen Stafford - Stephen Stafford On Behalf of: Greg Davis, Georgia Transmission Corporation, 1; - Stephen Stafford

Answer	No
Document Name	
Comment	

Modifying the Applicability section to move 4.1.1 to Attachment 1 is not a substantive change and is not particularly problematic.

Criteria 2.1 in the proposed attachment is not clearly worded and doesn't appear necessary as R2 is fairly clear on the applicability of proximity facilities. If this criteria is retained in the attachment, it should be simplified to simply refer to R2 and remove the additional unnecessary language.

(Regarding Criteria 3) Additionally, with the retirement of FAC-010, planning entities do not establish SOLs under the NERC standards. This criteria correctly refers to IROLs established by the RC but the language around the planning entities needs to be updated to correspond with the language established by NERC Project 2015-09 regarding the PC/TP identifying instances of "instability, Cascading or uncontrolled separation that adversely impacts the reliability of the BES."

Likes 0	
Dislikes 0	
Response	

Thank you for your comment. Please see revised Standard and hopefully your concern has been addressed.

Denise Sanchez - Denise Sanchez On Behalf of: Diana Torres, Imperial Irrigation District, 1, 6, 5, 3; George Kirschner, Imperial Irrigation District, 1, 6, 5, 3; Jesus Sammy Alcaraz, Imperial Irrigation District, 1, 6, 5, 3; Tino Zaragoza, Imperial Irrigation District, 1, 6, 5, 3; - Denise Sanchez

Answer	No
Document Name	
Comment	

IID agrees with transferring the applicability criteria from Section 4.1.1 to Attachment 1.

IID does not agree with the addition of the language in Criterion 2.1. This addition will complicate compliance for “adjacent” facilities owned by different entities.

A small entity may not have any stations subject to CIP-014, but it may be adjacent to a large transmission facility of another entity that falls under CIP-014. These stations would be verified through duplicative R2 criteria, resulting in the performance of a risk assessment under R5. The small entity conducting the risk assessment may end up with a list of stations that it neither owns nor operates.

What implications does this have for compliance with CIP-014? How should the small entity proceed to adhere to R6-R10? Will the small entity be tasked with assessing threats and vulnerabilities of the large transmission facilities that they neither own or operate? Furthermore, would they be responsible implementing security measures for these stations as well?

Likes 0	
Dislikes 0	

Response

Thank you for your comment. Please see revised Standard and hopefully your concern has been addressed.

Jesus Sammy Alcaraz - Imperial Irrigation District - 1

Answer	No
Document Name	

Comment

IID agrees with transferring the applicability criteria from Section 4.1.1 to Attachment 1.

IID does not agree with the addition of the language in Criterion 2.1. This addition will complicate compliance for “adjacent” facilities owned by different entities.

A small entity may not have any stations subject to CIP-014, but it may be adjacent to a large transmission facility of another entity that falls under CIP-014. These stations would be verified through duplicative R2 criteria, resulting in the performance of a risk assessment under R5. The small entity conducting the risk assessment may end up with a list of stations that it neither owns nor operates.

What implications does this have for compliance with CIP-014? How should the small entity proceed to adhere to R6-R10? Will the small entity be tasked with assessing threats and vulnerabilities of the large transmission facilities that they neither own or operate? Furthermore, would they be responsible implementing security measures for these stations as well?	
Likes 0	
Dislikes 0	
Response	
Thank you for your comment. Please see revised Standard and hopefully your concern has been addressed.	
Selene Willis - Edison International - Southern California Edison Company - 5	
Answer	No
Document Name	
Comment	
See comments submitted by the Edison Eclectic Institute	
Likes 0	
Dislikes 0	
Response	
Thank you for your comments. Please see EEI comment response.	
Dwanique Spiller - Berkshire Hathaway - NV Energy - 5	
Answer	No
Document Name	
Comment	

NV Energy supports the EEI response to this question.	
Likes 0	
Dislikes 0	
Response	
Thank you for your comments. Please see EEI comment response.	
Carver Powers - Utility Services, Inc. - 4	
Answer	No
Document Name	
Comment	
The proposed changes of moving the applicability of the standard to R1 and Attachment 1 now brings low impact entities into scope. Is this the intent of the Standard Drafting Team? Is the intent of this modification to require low impact entities to consider the criteria in Attachment 1? This process is already being completed by entities during their CIP-002 BES Cyber System categorization.	
Likes 0	
Dislikes 0	
Response	
Transmission Owner that owns a Transmission station or Transmission substation that meets the criteria of Attachment 1	
Stephanie Kenny - Edison International - Southern California Edison Company - 6	
Answer	No
Document Name	
Comment	

See EEI comments	
Likes 0	
Dislikes 0	
Response	
Thank you for your comments. Please see EEI comment response.	
Gail Elliott - Gail Elliott On Behalf of: Michael Moltane, International Transmission Company Holdings Corporation, 1; - Gail Elliott	
Answer	No
Document Name	
Comment	
ITC supports the EEI response	
Likes 0	
Dislikes 0	
Response	
Thank you for your comments. Please see EEI comment response.	
Amy Wesselkamper - PNM Resources - Public Service Company of New Mexico - 3	
Answer	No
Document Name	
Comment	

PNM and TNMP support EEI comments regarding 4.1.1, noted again here.

"EEI supports moving 4.1.1 to Attachment 1, however, we disagree with the inclusion of, and suggest striking, criterion 2.1 in the Applicability section because it is outside of the scope of the SAR. The SAR asks the drafting team to provide clear expectations regarding the inclusion of physically adjacent elements for the purpose of evaluating the impact from a physical attack, but it does not require or request modifications to the applicability of the Standard or requirements. Multiple non-applicable stations within reasonable proximity should not be deemed applicable when considered as a whole. It is the presence of an applicable station that requires evaluation of a physical attack and the identification of additional stations that may be impacted.

Further, criterion 2.1 includes a circular reference to Requirement R2 for Transmission station(s) or Transmission substation(s) that individually are not applicable when CIP-014-4 Requirement R1, Part 1.3 states that if the TO identified no applicable Transmission station(s) or Transmission substation(s) they are not required to fulfill the remainder of the standard, including Requirement R2. "

Likes 0	
Dislikes 0	

Response

Thank you for your comments. Please see EEI comment response.

Jason Snodgrass - Jason Snodgrass On Behalf of: Katrina Lyons, Georgia System Operations Corporation, 3, 4; - Jason Snodgrass

Answer	No
Document Name	

Comment

GSOC supports comments provided by Georgia Transmission

Likes 0	
Dislikes 0	

Response	
Thank you for your comments. Please see Georgia Transmission comment response.	
Mark Garza - FirstEnergy - FirstEnergy Corporation - 4, Group Name FE Voter	
Answer	Yes
Document Name	
Comment	
FirstEnergy has no objection.	
Likes 0	
Dislikes 0	
Response	
Thank you for your support.	
Jennifer Bray - Arizona Electric Power Cooperative, Inc. - 1	
Answer	Yes
Document Name	
Comment	
AEPC signed on to ACES comments below: ACES agrees with moving the Applicability to Attachment 1. While ACES agrees with the question asked, Criterion 2.1 from Attachment 1 is beyond the scope of the SAR. Further, Criterion 2.1 could create a situation where one entity identifies an Applicable substation when considered with another adjacent entity's substation. The other entity may have a different proximity criteria and not considered an Applicable substation when both should be applicable.	
Likes 0	

Dislikes 0	
Response	
Thank you for your comments. Please see ACES comment response.	
Joshua London - Eversource Energy - 1, Group Name Eversource	
Answer	Yes
Document Name	
Comment	
Eversource agrees with the creation of Attachment 1 but offers some minor comments: **2.1:** For sake of consistency, the phrase “physical adjacency” should be removed from section 2.1 and replaced with “proximity” to better align with R2. - The "500 kV and above" section should either be removed from the table in its entirety due to confusion being listed as zero, or replace the zero with a phrase like “must be studied.” Phrases (“not applicable”) are already being used within the table so it would be a similar approach.	
Likes 0	
Dislikes 0	
Response	
Thank you for your comment. Please see revised standard.	
Andy Fuhrman - Andy Fuhrman On Behalf of: Theresa Allard, Minnkota Power Cooperative Inc., 1; - Andy Fuhrman	
Answer	Yes
Document Name	
Comment	

MPC concurs with ACES' comments regarding Criterion 2.1 of Attachment 1.	
Likes 0	
Dislikes 0	
Response	
Thank you for your comments. Please see ACES comment response.	
Daniel Gacek - Exelon - 1, Group Name Exelon	
Answer	Yes
Document Name	
Comment	
Exelon supports moving the Applicability criteria into Attachment 1. Exelon interprets the SAR to require the assessment of a physical attacks on physically adjacent elements, and therefore supports the intent of Attachment 1, Section 2.1 and the R2.1 criteria to identify substations that are to be combined and treated as a single substation site for the purpose of the risk assessment The Attachment 1, Section 2.1, reference to the R2 methodology is confusing. Consider removing the reference to R2 and including physical adjacency criteria within Section 2.1; or alternatively, consider combining R1 and R2 and moving the Section 2.1 process step into R2.	
Likes 0	
Dislikes 0	
Response	
Thank you for your comment. Please see revised Standard and hopefully your concern has been addressed.	
Chris Shultz - Seattle City Light - 5	

Answer	Yes
Document Name	
Comment	
Moving the substation applicability criteria into the attachment (and referencing it from R1) makes sense.	
Likes 0	
Dislikes 0	
Response	
Thank you for your support.	
Robert Jones - Seattle City Light - 4	
Answer	Yes
Document Name	
Comment	
Moving the substation applicability criteria into the attachment (and referencing it from R1) makes sense.	
Likes 0	
Dislikes 0	
Response	
Thank you for your support.	
Zenon O'young-Chu - Seattle City Light - 3	
Answer	Yes
Document Name	
Comment	

Moving the substation applicability criteria into the attachment (and referencing it from R1) makes sense.	
Likes 0	
Dislikes 0	
Response	
Thank you for your support.	
Steven Rueckert - Western Electricity Coordinating Council - 10, Group Name WECC Entity Monitoring	
Answer	Yes
Document Name	
Comment	

WECC voted affirmative for the proposed standard but offers the following for serious consideration by the drafting team.

Placement within Attachment 1 versus in 4.1.1 is appropriate. However, the inconsistent use of “Transmission station”, “Transmission substation”, “Transmission Facilities”, “station”, “substation” does not support clarity. The first sentence of Attachment 1 is “Applicable Transmission station(s) or Transmission substation(s) that meet any of the following criteria:”. The second criterion starts with “Transmission Facilities that are operating between 200 kV and 499 kV at a single station or substation…” Why not consider changing Transmission Facility usages to Transmission station and Transmission substation? Example- “1. Transmission station(s) and Transmission substation(s) operated between 200 kV and 499 kV, where the Transmission station or Transmission substation is connected….” Criterion 2.1 illustrates that approach.

Attachment 1 needs to address consideration of the Transmission station(s) and Transmission substation(s) without regards to joint/multiple/shared ownership. Requirement 4 will determine which entity does the risk assessment but Transmission Owners should maintain the list inclusive of these arrangements. Responsibility could change in terms of performing the assessment.

Criterion 2.1 uses “adjacency” versus “proximity”. Consider changing that to read “Transmission station(s) or Transmission substation(s) that individually are not applicable based on the aggregated weighting value criteria from Table 1 but are applicable when included in the risk assessment based on proximity criterion per Requirement R2.” Suggest labeling Table 1. Suggest clarifying Table 1 to ensure that a Transmission station(s) or Transmission substation(s) in close proximity are applicable to use in the assessment regardless of voltage level or

alternatively if operated between 200 kV and 499 kV. Example- Is there clarity in this scenario: A 345 kV line (one of three from the CIP-014-4 applicable substation X) connects to substation Y which is in the "line-of-site" and steps down to 138 kV with multiple Transmission Lines connecting other Transmission substation(s). Substation Y is included not considering the weighting criteria as applied at substation Y or does substation Y have to consider the weighting criteria to be included in the assessment? And just to be clear, any Transmission station or substation that has a single 500 kV or above Transmission Line is included, correct? Criterion 3 should be reviewed and updated to reflect Project 2015-09 language regarding IROLs applicability to the Planning Coordinator and Transmission Planner. Also- it is unclear who the "its" is referencing to a certain degree. Consider this option: "3. Transmission station(s) or Transmission substation(s) that are identified by a Transmission Owner's Reliability Coordinator as critical to the identification of Interconnection Reliability Operating Limits (IROLs) and their associated contingencies. Transmission station(s) or Transmission substation(s) that are identified by a Transmission Owner's Planning Coordinator(s) and Transmission Planner(s) as associated with identified instability." See FAC-014-3 from Project 2015-09. A voltage limitation could be included to drive consistency—i.e. after "Transmission substation(s)" in the suggested option add "operated at 200 kV and above". Criterion 4 refers back, essentially, to NUC-001 which does not capitalize Facilities in Requirement 9 Part 9.2.2. This is yet another reason to consider Transmission station(s) and Transmission substation(s) instead of Transmission Facilities. Should this Criterion also consider Contingencies associated with the Transmission substation(s) and Transmission station(s) identified as "essential for meeting the NPIRs"? Just to be clear, this criteria includes underground Transmission station(s) and Transmission substation(s), correct? Consider inclusion of criteria for levels of generation within a substation or substations within the proximity determined. Simply looking at Transmission overlooks a significant risk as Transmission substations can be rebuilt quickly when compared to rebuilding or fixing a set of generators.

Likes 0	
Dislikes 0	

Response
Thank you for your comment. Please see revised Standard and hopefully your concern has been addressed.
Jodirah Green - ACES Power Marketing - 1,3,4,5,6 - MRO,WECC,Texas RE,SERC,RF, Group Name ACES Collaborators

Answer	Yes

Document Name	
Comment	
ACES agrees with moving the Applicability to Attachment 1. While ACES agrees with the question asked, Criterion 2.1 from Attachment 1 is beyond the scope of the SAR. Further, Criterion 2.1 could create a situation where one entity identifies an Applicable substation when considered with another adjacent entity's substation. The other entity may have a different proximity criteria and not considered an Applicable substation when both should be applicable.	
Likes 0	
Dislikes 0	
Response	
Thank you for your comment. Please see revised Standard and hopefully your concern has been addressed.	
Robert Follini - Avista - Avista Corporation - 3	
Answer	Yes
Document Name	
Comment	
Likes 0	
Dislikes 0	
Response	
Thank you for your support.	
James Keele - Entergy - 3	
Answer	Yes
Document Name	

Comment	
Likes 0	
Dislikes 0	
Response	
Thank you for your support.	
Rebika Yitna - Rebika Yitna On Behalf of: Roger Brand, MEAG Power, 3, 1; - Rebika Yitna	
Answer	Yes
Document Name	
Comment	
Likes 0	
Dislikes 0	
Response	
Thank you for your support.	
Jay Sethi - Manitoba Hydro - 1,3,5,6 - MRO, Group Name Manitoba Hydro Group	
Answer	Yes
Document Name	
Comment	
Likes 0	
Dislikes 0	
Response	

Thank you for your support.	
Kelley Sargent - Puget Sound Energy, Inc. - 3	
Answer	Yes
Document Name	
Comment	
Likes 0	
Dislikes 0	
Response	
Thank you for your support.	
Lucinda Bradshaw - Oncor Electric Delivery - 1 - Texas RE	
Answer	Yes
Document Name	
Comment	
Likes 0	
Dislikes 0	
Response	
Thank you for your support.	
Alison Nickells - NiSource - Northern Indiana Public Service Co. - 1 - RF	
Answer	Yes
Document Name	
Comment	

Likes 0	
Dislikes 0	
Response	
Thank you for your support.	
Tyler Schwendiman - ReliabilityFirst - 10	
Answer	Yes
Document Name	
Comment	
Likes 0	
Dislikes 0	
Response	
Thank you for your support.	
Michele Tondalo - United Illuminating Co. - 1	
Answer	Yes
Document Name	
Comment	
Likes 0	
Dislikes 0	
Response	
Thank you for your support.	

Michele Shafer - New York State Electric & Gas (NYSEG) - 6	
Answer	Yes
Document Name	
Comment	
Likes 0	
Dislikes 0	
Response	
Thank you for your support.	
TRACEY JOHNSON - Southern Indiana Gas and Electric Co. - 3,5,6 - RF	
Answer	Yes
Document Name	
Comment	
Likes 0	
Dislikes 0	
Response	
Thank you for your support.	
Diana Aguas - CenterPoint Energy Houston Electric, LLC - 1 - Texas RE	
Answer	Yes
Document Name	
Comment	

Likes 0	
Dislikes 0	
Response	
Thank you for your support.	
Anne Kronshage - Public Utility District No. 1 of Chelan County - 6, Group Name Public Utility District No. 1 of Chelan County - Voting Group	
Answer	Yes
Document Name	
Comment	
Likes 0	
Dislikes 0	
Response	
Thank you for your support.	
John Pearson - ISO New England, Inc. - 2	
Answer	Yes
Document Name	
Comment	
Likes 0	
Dislikes 0	
Response	
Thank you for your support.	
Teresa Krabe - Lower Colorado River Authority - 5	

Answer	Yes
Document Name	
Comment	
Likes 0	
Dislikes 0	
Response	
Thank you for your support.	
Jeffrey Streifling - NB Power Corporation - 1	
Answer	Yes
Document Name	
Comment	
Likes 0	
Dislikes 0	
Response	
Thank you for your support.	
Mark Flanary - Midwest Reliability Organization - 10	
Answer	Yes
Document Name	
Comment	
Likes 0	

Dislikes 0	
Response	
Thank you for your support.	
Rachel Coyne - Texas Reliability Entity, Inc. - 10	
Answer	Yes
Document Name	
Comment	
Likes 0	
Dislikes 0	
Response	
Thank you for your support.	
Chantal Mazza - Chantal Mazza On Behalf of: Junji Yamaguchi, Hydro-Quebec (HQ), 1, 5; Nicolas Turcotte, Hydro-Quebec (HQ), 1, 5; - Chantal Mazza	
Answer	Yes
Document Name	
Comment	
Likes 0	
Dislikes 0	
Response	
Thank you for your support.	
Fon Hiew - NB Power Corporation - New Brunswick Power Transmission Corporation - 5	

Answer	Yes
Document Name	
Comment	
Likes 0	
Dislikes 0	
Response	
Thank you for your support.	
James Baldwin - James Baldwin On Behalf of: Matt Lewis, Lower Colorado River Authority, 5, 1; - James Baldwin	
Answer	Yes
Document Name	
Comment	
Likes 0	
Dislikes 0	
Response	
Thank you for your support.	
Ruida Shu - Northeast Power Coordinating Council - 1,2,3,4,5,6,7,8,9,10 - NPCC, Group Name NPCC RSC	
Answer	Yes
Document Name	
Comment	
Likes 0	

Dislikes 0	
Response	
Thank you for your support.	
Mike Magruder - Avista - Avista Corporation - 1,3,5	
Answer	Yes
Document Name	
Comment	
Likes 0	
Dislikes 0	
Response	
Thank you for your support.	
Michael Jang - Seattle City Light - 1	
Answer	Yes
Document Name	
Comment	
Likes 0	
Dislikes 0	
Response	
Thank you for your support.	
Daren Brubaker - Seattle City Light - 6	
Answer	Yes

Document Name	
Comment	
Likes 0	
Dislikes 0	
Response	
Thank you for your support.	
Chris Wagner - Santee Cooper - 1, Group Name Santee Cooper	
Answer	Yes
Document Name	
Comment	
Likes 0	
Dislikes 0	
Response	
Thank you for your support.	

2. Do you agree with the modifications made in CIP-014-4 with modified Requirement R1 to address the issues identified in the SAR?	
Jodirah Green - ACES Power Marketing - 1,3,4,5,6 - MRO,WECC,Texas RE,SERC,RF, Group Name ACES Collaborators	
Answer	No
Document Name	
Comment	
ACES agrees with the changes, but recommends changing Attachment 1 to remove the reference to R2. This allows R1 and R2 to standalone leaving R1 for the identification of applicability and R2 for proximity criteria.	
Likes 0	
Dislikes 0	
Response	
Thank you for your comment. Please see revised Standard and hopefully your concern has been addressed.	
Jason Snodgrass - Jason Snodgrass On Behalf of: Katrina Lyons, Georgia System Operations Corporation, 3, 4; - Jason Snodgrass	
Answer	No
Document Name	
Comment	
GSOC supports comments provided by Georgia Transmission	
Likes 0	
Dislikes 0	
Response	
Thank you for your comments. Please see Georgia Transmission comment response.	

Amy Wesselkamper - PNM Resources - Public Service Company of New Mexico - 3	
Answer	No
Document Name	CIP-014-4 Draft 1, Question 2 PNM_TNMP response.docx
Comment	

PNM and TNMP support EEI comments regarding R1, noted again here. Additionally, please see **document attached** in this question response. PNM and TNMP offer additional comments and illustrative diagram for SDT consideration.

"EEI proposes the following modifications:

Add 'calendar' to Requirement R1, Part 1.2 to ensure that entities continue to have the same flexibility afforded to them under CIP-014-3 to align with calendar months instead of specific dates:

*1.2 Review the list every 36 **calendar** months and update the list, if necessary.*

Suggest changing the text of R1.3 to read as follows:

*If the Transmission Owner identifies no applicable Transmission station(s) and **or** Transmission substation(s), then no additional actions are required to fulfill the remainder of the standard."*

Likes 0	
Dislikes 0	
Response	

Attached document was inaccessible.

Thank you for your comments. Please see EEI comment response.

Gail Elliott - Gail Elliott On Behalf of: Michael Moltane, International Transmission Company Holdings Corporation, 1; - Gail Elliott

Answer	No
Document Name	
Comment	
ITC supports the EEI response	
Likes 0	
Dislikes 0	
Response	
Thank you for your comments. Please see EEI comment response.	
Stephanie Kenny - Edison International - Southern California Edison Company - 6	
Answer	No
Document Name	
Comment	
See EEI comments	
Likes 0	
Dislikes 0	
Response	
Thank you for your comments. Please see EEI comment response.	
Dwanique Spiller - Berkshire Hathaway - NV Energy - 5	
Answer	No

Document Name	
Comment	
NV Energy supports the EEI response to this question.	
Likes 0	
Dislikes 0	
Response	
Thank you for your comments. Please see EEI comment response.	
Selene Willis - Edison International - Southern California Edison Company - 5	
Answer	No
Document Name	
Comment	
See comments submitted by the Edison Eclectic Institute	
Likes 0	
Dislikes 0	
Response	
Thank you for your comments. Please see EEI comment response.	
Stephen Stafford - Stephen Stafford On Behalf of: Greg Davis, Georgia Transmission Corporation, 1; - Stephen Stafford	
Answer	No
Document Name	

Comment
The concept of the risk assessment in the currently approved standard and this draft is ambiguous and is interpreted differently across the industry. The standard requirements need additional clarification as to what type of risk (explosive, gunshot, etc) the TO should be protecting against. It is important to keep in mind that the clarification on the risk should take into account the premise that physical security measures may be installed pursuant to the assessment of this risk.

Likes 0	
Dislikes 0	

Response
Thank you for your comment. Please see revised Standard and hopefully your concern has been addressed.

Kristine Martz - Edison Electric Institute - NA - Not Applicable - NA - Not Applicable	
Answer	No
Document Name	

Comment
EEI proposes the following modifications: Add ‘calendar’ to Requirement R1, Part 1.2 to ensure that entities continue to have the same flexibility afforded to them under CIP-014-3 to align with calendar months instead of specific dates: 1.2 Review the list every 36 **calendar** months and update the list, if necessary. Suggest changing the text of R1.3 to read as follows: If the Transmission Owner identifies no applicable Transmission station(s) **or** Transmission substation(s), no additional actions are required to fulfill the remainder of the standard.

Likes 0	

Dislikes 0	
Response	
Thank you for your comment. The Drafting Team made modifications to the Standard accordingly and hopefully your concern has been addressed.	
David Jendras Sr - Ameren - Ameren Services - 3	
Answer	No
Document Name	
Comment	
Ameren supports EEI's comments on this project.	
Likes 0	
Dislikes 0	
Response	
Thank you for your comments. Please see EEI comment response.	
Hillary Creurer - Allete - Minnesota Power, Inc. - 1	
Answer	No
Document Name	
Comment	
Minnesota Power supports MRO-NSRF and EEI's comments.	
Likes 0	
Dislikes 0	
Response	

Thank you for your comments. Please see EEI comment response.	
Andy Fuhrman - Andy Fuhrman On Behalf of: Theresa Allard, Minnkota Power Cooperative Inc., 1; - Andy Fuhrman	
Answer	No
Document Name	
Comment	
MPC concurs with the MRO NSRF's comments regarding combining R1 and R2. MPC strongly disagrees with the use of a 36 month timeframe for utilities who have not previously identified stations or substations as critical for the same reasons specified in our comments for question 6.	
Likes 0	
Dislikes 0	
Response	
Thank you for the comment. The SDT felt the 36 months' timeframe met the directives in the SAR without putting an undue burden on industry.	
Mark Flanary - Midwest Reliability Organization - 10	
Answer	No
Document Name	
Comment	
MRO is supportive of the proposed timeframe, however the language of R1.2 indicating "every 36 months" is unnecessarily strict. Consider softening to "at least every 36 months" or something similar that drives towards performance with a frequency no greater than every 36 months.	
Likes 0	

Dislikes 0	
Response	
Updated the standard. Thank you for your comment.	
Dave Krueger - SERC Reliability Corporation - 10	
Answer	No
Document Name	
Comment	

Thank you for the chance to comment, SERC appreciates the complexity of the SDT's task of modifying multiple parts of such a high profile and high-priority standard.

· Item #1.A: R1 seems to be missing a key item from the SAR, under Detailed Description #2: "Revisions to the risk assessment should be made to only include transmission and generation projects that are appropriate to the periodicity of the entity's risk assessments. " This precept goes to both applicability and model accuracy, but is key that notional/planned transmission improvements that may be implemented beyond the 36 month study period are not considered. Planned transmission projects outside that 36 month time horizon could possibly be considered for Resiliency measures in R9.1.

· Item #1.B: The previous CIP-014-3 R1 requirement did not address applicability separately, and thus implied the applicable list of stations to be studied would be up-to-date and accurate as of the date of performance of CIP-014-3 R1 upon its 30 or 60 month cycle. However, now that R1 and R5 are separate requirements, an issue of accuracy or fidelity could emerge if R1 (which is now an untimed/undated requirement) was performed too many months/years prior to the performance of R5. This could result in a R1 (and downstream R2) list that was accurate at the time of preparation, but 'stale' by the time of R5 performance. The SAR seems to address this under Detailed Description Item #2: "Revisions to the risk assessment should be made to only include transmission and generation projects that are appropriate to the periodicity of the entity's risk assessments." as well as in the SAR Project Scope #2's reference of correction of discrepancies. We would suggest either introducing a timing component to R1 to ensure fidelity, or a accuracy component to R5 to ensure the R1 (and downstream R2) lists used are still accurate as of the time of the dated completion of R5.

Likes 0	
Dislikes 0	

Response
Check R1.1 and possibly strengthen language around out-of-scope planned/notional projects. Add language to R1 to ensure that applicability list is updated and Risk assessment performed together (so you don't update applicability list on day 0 and R1 assessment on day 720)

Israel Perez - Israel Perez On Behalf of: Laura Somak, Salt River Project, 3, 6, 5, 1; Mathew Weber, Salt River Project, 3, 6, 5, 1; Thomas Johnson, Salt River Project, 3, 6, 5, 1; Timothy Singh, Salt River Project, 3, 6, 5, 1; - Israel Perez	
Answer	No
Document Name	
Comment	
SRP supports the MRO NSRF with Tacoma Power's comments.	
Likes 0	
Dislikes 0	
Response	
Thank you for your comments. Please see MRO NSRF comment response.	

Devin Shines - PPL - Louisville Gas and Electric Co. - 1,3,5,6 - SERC,RF	
Answer	No
Document Name	
Comment	

Louisville Gas & Electric and Kentucky Utilities support EEI's comments.	
Likes 0	
Dislikes 0	
Response	
Thank you for your comments. Please see EEI comment response.	
Andrew Smith - APS - Arizona Public Service Co. - 5	
Answer	No
Document Name	
Comment	
AZPS supports EEI's proposal to utilize "calendar" months in R1.	
Likes 0	
Dislikes 0	
Response	
Thank you for your comments. Please see EEI comment response.	
Joshua London - Eversource Energy - 1, Group Name Eversource	
Answer	No
Document Name	
Comment	
Eversource is looking for clarity on what is meant by the phrase "planned to be" in service.	

Requirement R1.2 also seems unnecessary. With the defined time period in R1.1 and the risk assessment cycle defined by R5, Eversource recommends the removal of R1.2 for brevity and clarity.

Eversource also believes that R1 should be solely about developing a list whereas R2 should define the stations that need to be included. See below for a proposed modification moving parts of R1 into R2.

R1. Each Transmission Owner shall establish and maintain a list of applicable Transmission

station(s) and Transmission substation(s) for performing risk assessments in

accordance with the criteria in Attachment 1. Each Transmission Owner shall:

[Violation Risk Factor: High; Time-Horizon: Long-term Planning]

1.1. Consider all Transmission station(s) and Transmission substation(s) that are

existing or planned to be in service within 36 months; and

1.2. Review the list every 36 months and update the list, if necessary.

1.3. If the Transmission Owner identifies no applicable Transmission station(s) and Transmission substation(s), then no additional actions are required to fulfill the remainder of the standard

R2. Each Transmission Owner shall establish and implement documented criteria for

identifying Transmission station(s) and Transmission substation(s) **in accordance with Attachment 1, as well as stations in proximity to those identified through Attachment 1**, irrespective of ownership, that shall be included in the risk assessment. . *[Violation Risk Factor: Medium; Time-Horizon: Long-term*

Planning]

2.1. The criteria shall at a minimum include the following:

2.1.1. Line-of-sight between multiple Transmission station or Transmission substation yards from a single site.

2.1.2. Ease of access from a common public roadway that exists between multiple Transmission station or Transmission substation yards.

2.1.3. The Transmission station or Transmission substation yards are in close enough proximity that a single event can impact multiple Transmission stations or Transmission substations.

2.2. If the Transmission Owner identifies no applicable Transmission station(s) and Transmission substation(s), then no additional actions are required to fulfill the remainder of the standard.

Likes 0	
Dislikes 0	
Response	

"Planned to be in service" was taken from the existing standard and is meant to represent projects that are expected to be operational within 36 months. Thank you for your comment. The Standard was updated.	
Sean Bodkin - Dominion - Dominion Resources, Inc. - 6, Group Name Dominion	
Answer	No
Document Name	
Comment	
Dominion Energy supports EEI Comments. In addition to EEI comments, Dominion Energy considers that 36 months for planned substations is not realistic based on delays due to construction, supply chain, outage planning and PJM planning horizons. Dominion Energy has the same issue with R1.2 as 36 months is not realistic due to the uncertainty on actual system configuration changes.	
Likes 0	
Dislikes 0	
Response	
Thank you for your comments. Please see EEI comment response. The SDT felt the 36 months' timeframe met the directives in the SAR while trying to respect the uncertainty inherent in future projects. The SDT acknowledges that there is always uncertainty in future projects regardless of the timeframe chosen.	
Ellese Murphy - Duke Energy - 1,3,5,6 - Texas RE,SERC,RF	
Answer	No
Document Name	

Comment
Duke Energy supports the revisions to clarify the timeline for the performance of R1 requirements but requests additional clarity if the 36-month timeframe starts from the time of the completion of the risk assessments. Duke Energy also supports EEI comments.

Likes 0	
Dislikes 0	

Response
Thank you for your comments. The SDT maintained the flexibility inherent in the existing standard with regards to when one study period ends and the next starts. Please see EEI comment response.

Rachel Schuldt - Black Hills Corporation - 6, Group Name Black Hills Corporation - All Segments	
Answer	No
Document Name	

Comment
Black Hills Corporation agrees with EEI comments and proposed modifications.

Likes 0	
Dislikes 0	

Response
Thank you for your comments. Please see EEI comment response.

Donna Wood - Tri-State G and T Association, Inc. - 1	
Answer	No
Document Name	
Comment	
Tri-State agrees with the MRO NSRF Submitted Comments	
Likes 0	
Dislikes 0	
Response	
Thank you for your comments. Please see MRO NSRF comment response.	
Richard Vendetti - NextEra Energy - 5	
Answer	No
Document Name	
Comment	
NEE support's EEI comments: " EEI proposes the following modifications: Add 'calendar' to Requirement R1, Part 1.2 to ensure that entities continue to have the same flexibility afforded to them under CIP-014-3 to align with calendar months instead of specific dates: {C}1.2 Review the list every 36 **calendar** months and update the list, if necessary.	

Suggest changing the text of R1.3 to read as follows: If the Transmission Owner identifies no applicable Transmission station(s) and **or** Transmission substation(s), then no additional actions are required to fulfill the remainder of the standard. “	
Likes 0	
Dislikes 0	
Response	
Thank you for your comment. Updated the standard.	
Jennifer Bray - Arizona Electric Power Cooperative, Inc. - 1	
Answer	No
Document Name	
Comment	
AEPC signed on to ACES comments below: ACES agrees with the changes, but recommends changing Attachment 1 to remove the reference to R2. This allows R1 and R2 to standalone leaving R1 for the identification of applicability and R2 for proximity criteria.	
Likes 0	
Dislikes 0	
Response	
Thank you for your comments. Please see ACES comment response.	

Anne Kronshage - Public Utility District No. 1 of Chelan County - 6, Group Name Public Utility District No. 1 of Chelan County - Voting Group	
Answer	No
Document Name	
Comment	

Comments: In the SAR, there were 5 objectives listed in the Project scope:

1. Clarify the risk assessment methods for studying instability, uncontrolled separation, and Cascading within an Interconnection. The methods should account for dynamic studies.

Adequately addressed.

2. Clarify the case(s) used for the risk assessment to be tailored to the Requirement R1 in-service window and correct any discrepancies between the study period, frequency of study, and the base case(s) a Transmission Owner uses.

Not adequately addressed – the study window is not clarified. This generally appears to be a study in the operations horizon, yet the 36 month proposed window is beyond the operations horizon. For applicability, a Transmission Operator may not have sufficient station information to perform its required assessment for a station that has not been constructed. Furthermore, for system changes that could occur within this 36 month window (such as station modifications to protection or bus design, or physical security changes such as hardening access or 'line of sight'), this proposal does not speak to which 'version' of the system state (present or future-36 months) is to be studied. For example, if a station is known to cause instability for a particular event, but has a Corrective Action Plan to be implemented within the year to mitigate that instability, is it appropriate to include the Corrective Action Plan in the assumptions of the study? In summary, these sorts of issues were not clarified in this new revision, and further clarification is requested.

3. Assure the adequacy and consistent implementation of technically supported justification for study decisions. Clarity should include specificity regarding the documentation, and usage of criteria to identify instability, uncontrolled separation, or Cascading within an Interconnection occur as part of a risk assessment.

Adequately addressed.

4. Clarify what study scenario(s) and other study assumptions are appropriate and reasonable considering the intent of CIP-014-3 and the potential range of issues during a physical attack. Simulations should incorporate the loss of station elements without the reliance on local system protection.

Adequately addressed.

5. Clarify how to account for adjacent Transmission stations or Transmission substations of differing ownership as well as for those Transmission stations or Transmission substations within line-of-sight to each other. *This was listed as an item to modify R1, but ended up being in the new proposed version's R2*.

Not adequately addressed – the term 'line-of-sight' is vague and ambiguous. This has not had much technical discussion to support inclusion in a regulatory standard. For example, if one were to hike to the top of a very tall mountain, there are multiple substations that are within 'line of sight', yet a common attack vector would not likely impact all the stations that could be seen. NERC's intent is more likely in the flavor of 'what's in the neighborhood' and trying to establish some sort of proximity rationale here, but line-of-sight is likely a wrong word choice to express this concept of adjacencies. Similarly, in the subsequent build-up of R2 in addressing proximity, 'Ease of access' (R2.1.2) and 'close proximity…that a single event could impact…' (R2.1.3) are equally vague without supporting examples of intent from NERC. Ease of access may be difficult for a vehicle, but quite easy for a drone, helicopter, or other aerial device, or if near water, a boat may easily access sites that are difficult for automobile. Similarly, the impact zone of a single event could be small if a low capacity home-made device, but quite large if a nuclear device. NERC's new proposed language is ambiguous on what is acceptable. While it is noted this is ultimately criteria to be determined by the Transmission Owner, the ambiguities could lead to disagreements between Transmission Owners and regulators and audit staff over adequacy, where the expectation of levels of adequacy is not defined in the standard nor discussed in the Technical Rationale. It is requested these topics be revisited in light of these considerations.

Likes 0	
Dislikes 0	

Response

The SDT has addressed the timeline issues brought up in the SAR and considers the operational discussion brought up here out of scope.

Michael Dillard - Austin Energy - 5, Group Name Austin Energy

Answer	No

Document Name	
Comment	
Austin Energy supports MRO's comments. Attached in Question 1.	
Likes 0	
Dislikes 0	
Response	
Thank you for your comments. Please see MRO NSRF comment response.	
Ben Hammer - Western Area Power Administration - 1	
Answer	No
Document Name	
Comment	
WAPA concurs with the use of the 36 month timeframe in the draft R1. WAPA recommends removing the circular reference to R2 in Attachment 1, and keep R1 strictly to determining the applicability list for study. Requirement R1.3 states that no further action is required if no applicable Transmission stations are identified, however, in order to complete this identification, then R2 must be completed. In addition, WAPA recommends the removal of Criterion 2.1 in Attachment 1, in accordance with comments submitted in Q1.	
Likes 0	
Dislikes 0	
Response	
Thank you for your comment. Please see revised Standard.	

Karen Demos - NextEra Energy - Florida Power and Light Co. - 3	
Answer	No
Document Name	
Comment	
NextEra/FPL supports EEI's comments	
Likes 0	
Dislikes 0	
Response	
Thank you for your comments. Please see EEI comment response.	
Cain Braveheart - Bonneville Power Administration - 1,3,5,6 - WECC	
Answer	No
Document Name	
Comment	
BPA believes the rewritten R1 seems to be intended to create auditable documentation of the same outcome that is already achieved when a Registered Entity evaluates the current Applicability section.	
Likes 0	
Dislikes 0	
Response	
Thank you for your comment. Please see revised Standard.	

Alan Kloster - Alan Kloster On Behalf of: Jeremy Harris, Evergy, 3, 5, 1, 6; Kevin Frick, Evergy, 3, 5, 1, 6; Marcus Moor, Evergy, 3, 5, 1, 6; Tiffany Lake, Evergy, 3, 5, 1, 6; - Alan Kloster	
Answer	No
Document Name	
Comment	
Evergy supports and incorporates by reference the comments of the Edison Electric Insitute (EEI) and MRO NSRF for question #2.	
Likes 0	
Dislikes 0	
Response	
Thank you for your comments. Please see MRO NSRF and EEI comment responses.	
Anna Martinson - MRO - 1,2,3,4,5,6 - MRO, Group Name MRO Group	
Answer	No
Document Name	
Comment	
The MRO NSRF concurs with the use of the 36 month timeframe in the draft R1. The MRO NSRF recommends removing the circular reference to R2 in Attachment 1, and keep R1 strictly to determining the applicability list for study. Requirement R1.3 states that no further action is required if no applicable Transmission stations are identified, however, in order to complete this identification, then R2 must be completed. In addition, the MRO NSRF recommends the removal of Criterion 2.1 in Attachment 1, in accordance with comments submitted in Q1.	
Likes 1	Lincoln Electric System, 1, Johnson Josh
Dislikes 0	

Response
Thank you for your comment. Please see revised Standard.

Michele Shafer - New York State Electric & Gas (NYSEG) - 6	
Answer	No
Document Name	
Comment	

- CIP-014-4 R1 requires the Transmission Owner to "…establish and maintain a list of applicable Transmission station(s) and Transmission substation(s)…" while R1.1 specifies that it must consider station(s) that are "…existing or planned to be in service within 36 months…" The phrasing could be interpreted that the list must be updated continuously and not just when it is reviewed. Suggest that R1 be modified to state that: "Each Transmission Owner shall **have a list** of applicable…." And let R1.1 and R1.2 specify how it is updated.
- NERC utilizes the term calendar months; suggest that R1.1 be reworded to use the term "…within 36 **calendar** months…"
- In CIP-014-4 R1.2 the list review cadence is listed as "…every 36 months…" which is a very specific timeframe and hypothetically if the list is updated at 35 months it would not be in compliance. Suggest the phrasing be updated to: "Review the list **at least once every** 36 calendar months…"
- The stations identified in R2 must be included in the assessment in R3 but there is no requirement to add them to the R1 list as this list is derived from only Attachment 1. Suggest that the wording be added to the standard requiring all stations included in the assessment to be added to the R1 list and are periodically reviewed/updated.

Likes 0	
Dislikes 0	

Response
Thank you for your comment. Please see revised Standard.

Michele Tondalo - United Illuminating Co. - 1

Answer	No
Document Name	
Comment	

Comment 1: CIP-014-4 R1 requires the Transmission Owner to "…establish and **maintain** a list of applicable Transmission station(s) and Transmission substation(s)…" while R1.1 specifies that it must consider station(s) that are "…existing or planned to be in service within 36 months…" The phrasing could be interpreted that the list must be updated continuously and not just when it is reviewed. Suggest that R1 be modified to state that:

"Each Transmission Owner shall have a list of applicable…." And let R1.1 and R1.2 specify how it is updated.

Comment 2: NERC utilizes the term calendar months; suggest that R1.1 be reworded to use the term "…within 36 calendar months…"

Comment 3: In CIP-014-4 R1.2 the list review cadence is listed as "…every 36 months…" which is a very specific timeframe and hypothetically if the list is updated at 35 months it would not be in compliance. Suggest the phrasing be updated to:

"Review the list at least once every 36 calendar months…"

Comment 4: The stations identified in R2 must be included in the assessment in R3 but there is no requirement to add them to the R1 list as this list is derived from only Attachment 1. Suggest that the wording be added to the standard requiring all stations included in the assessment to be added to the R1 list and are periodically reviewed/updated.

Likes 0	
Dislikes 0	
Response	

Thank you for your comment. Please see revised Standard.

Lucinda Bradshaw - Oncor Electric Delivery - 1 - Texas RE	
Answer	No
Document Name	

Comment
Oncor does not agree with the use of 36 months because that time frame is beyond Oncor's accurate planning frame, particularly given the current large amount of growth in Oncor's service area. Oncor recommends no longer than 24 months be used.

Likes 0	
Dislikes 0	

Response
Thank you for the comment. The SDT felt the 36 months' timeframe met the directives in the SAR without putting an undue burden on industry.

Kelley Sargent - Puget Sound Energy, Inc. - 3	
Answer	No
Document Name	

Comment
We agree with the intent of CIP-014-4 to address issues identified in the SAR, however we would like to suggest changes to improve readability. There is some interplay between R1 and R2 through Attachment 1 that makes identification of "applicable" stations confusing. R1 refers to Attachment 1 to identify "applicable" stations based on the weighting criteria in Table 1. Attachment 1 section 2.1 requires user to refer to R2 and apply proximity criteria to stations that were not applicable in R1. To meet the intent of SAR to identify station "groups" that meet applicability criteria of Attachment 1, it may be best to identify station groups separately under R2 as a sub-requirement (i.e. move Section 2.1 from Attachment 1 to sub-requirement R2.2) and make Attachment 1 agnostic of stations or station groups. This separates intent of R1 and R2 and allows both requirements to reference Attachment 1 applicability criteria. R1 will identify individual stations that meet Attachment 1 applicability criteria. R2 will identify station groups with

stations that were individually non-applicable under R1, but when combined with other non-applicable station(s) - based on proximity criteria of R2, may be applicable per Attachment 1 Table 1.	
Likes 0	
Dislikes 0	
Response	
Thank you for your comment. Please see revised Standard.	
Jennie Wike - Jennie Wike On Behalf of: John Merrell, Tacoma Public Utilities (Tacoma, WA), 1, 4, 5, 6, 3; - Jennie Wike, Group Name Tacoma Power	
Answer	No
Document Name	
Comment	
Tacoma Power supports the MRO NSRF comments, as follows. The MRO NSRF concurs with the use of the 36 month timeframe in the draft R1. The MRO NSRF recommends removing the circular reference to R2 in Attachment 1, and keep R1 strictly to determining the applicability list for study. Requirement R1.3 states that no further action is required if no applicable Transmission stations are identified, however, in order to complete this identification, then R2 must be completed. In addition, the MRO NSRF recommends the removal of Criterion 2.1 in Attachment 1, in accordance with comments submitted in Q1.	
Likes 0	
Dislikes 0	
Response	
Thank you for your comments. Please see MRO NSRF comment response.	

Kevin Conway - Western Power Pool - 4	
Answer	No
Document Name	
Comment	
The CIP-014 modifications seem objective and responsive to the SAR, however a deeper reading of R2 and R3 indicate that the Drafting Team is allowing each entity the latitude for flexibility in it's criteria and methodologies. This continues the inconsistencies in CIP-014 Risk Assessments between entities. "The requirement language within CIP-014-3 does not prescribe a specific method for how each risk assessment shall be performed." (see 2023-06 CIP SAR 07262023 pg.2) The current proposal adds a list of items to be included, but falls short of the goal to ensure consistency between entities.	
Likes 0	
Dislikes 0	
Response	
Thank you for the comment. The SDT feels the proposed language increases consistency without being overly prescriptive.	
Alison Nickells - NiSource - Northern Indiana Public Service Co. - 1 - RF	
Answer	No
Document Name	
Comment	
Likes 0	
Dislikes 0	
Response	
Thank you.	

Steven Rueckert - Western Electricity Coordinating Council - 10, Group Name WECC Entity Monitoring	
Answer	Yes
Document Name	
Comment	
Maintaining a list is appropriate. Ensuring how the list is addressed within the assessment for each Transmission station and Transmission substation will be critical and indicates that assessments should be done sequentially/chronologically to effectively represent the configuration being assessed. Suggest adjusting language in Requirement R1.1 to "Include" versus "Consider". Also, later on in the Standard "calendar months" is used versus simply "months". Please consider adjusting for consistency all period descriptions to one or the other. For Requirement R1.3 consider: "If the Transmission Owner identifies no applicable Transmission station(s) and Transmission substation(s) using the criterion in Attachment 1, then document the condition accordingly." There may actually be actions required if a Transmission Owner having an applicable Transmission station or Transmission substation has a Transmission Line emanating from the applicable Transmission station/Transmission substation that terminates in a different Transmission Owner's Transmission station or Transmission substation meeting the criteria in Requirement R2. In turn, the two Transmission Owner's may need to coordinate actions as Requirement R4 states. SDT can provide the clarity needed as the condition exists and the second Transmission Owner may need to consider the loss of the proximity-based included Transmission station/substation in its own risk assessments. If the DT elects not to remove the phrase regarding "no additional actions", update "standard" to "reliability Standard" for consistency.	
Likes 0	
Dislikes 0	
Response	
Thank you for the comment.	
Daniel Gacek - Exelon - 1, Group Name Exelon	
Answer	Yes
Document Name	
Comment	

Exelon supports the EEI comment to add "calendar" to the timeframe stated in 1.2.	
Likes 0	
Dislikes 0	
Response	
Thank you for the comment.	
John Pearson - ISO New England, Inc. - 2	
Answer	Yes
Document Name	
Comment	
While we agree that the modification meets the intent of the SAR, sub-requirement R1.2 should be modified to allow some flexibility in review timing. Change wording to "Review the list **at least** every 36 months and update the list, if necessary.	
Likes 0	
Dislikes 0	
Response	
Updated the standard with suggested language changes.	
Brian Millard - Tennessee Valley Authority - 1,3,5,6 - SERC, Group Name TVA RBB	
Answer	Yes
Document Name	
Comment	

TVA agrees with the modifications to R1, aligning facility in-service dates, list creation, and list review timelines 36 months. TVA again states an objection to the modified Applicability criteria, specifically to evaluate nonapplicable facilities in aggregate, per Attachment 1.	
Likes 0	
Dislikes 0	
Response	
Thank you for your comment. Please see revised Standard.	
Mark Garza - FirstEnergy - FirstEnergy Corporation - 4, Group Name FE Voter	
Answer	Yes
Document Name	
Comment	
FirstEnergy has no objection to the modifications made to R1.	
Likes 0	
Dislikes 0	
Response	
Thank you for the comment.	
Tyler Schwendiman - ReliabilityFirst - 10	
Answer	Yes
Document Name	
Comment	
For R1.1.2, is the verbiage “, if necessary” needed? The list should be reviewed every 36 months.	

Likes 0	
Dislikes 0	
Response	
Thank you for the comment.	
Jay Sethi - Manitoba Hydro - 1,3,5,6 - MRO, Group Name Manitoba Hydro Group	
Answer	Yes
Document Name	
Comment	
Manitoba Hydro recommends removing the circular reference to R2 in Attachment 1. Requirement R1.3 states that no further action is required if no applicable Transmission stations are identified, however, in order to complete this identification, R2 must be completed. To resolve this, R1 and R2 can be combined in to one requirement for the scope of the study.	
Likes 0	
Dislikes 0	
Response	
Thank you for your comment. Please see revised Standard.	
Chris Wagner - Santee Cooper - 1, Group Name Santee Cooper	
Answer	Yes
Document Name	
Comment	
Likes 0	
Dislikes 0	
Response	

Thank you for your support.	
Zenon O'young-Chu - Seattle City Light - 3	
Answer	Yes
Document Name	
Comment	
Likes 0	
Dislikes 0	
Response	
Thank you for your support.	
Daren Brubaker - Seattle City Light - 6	
Answer	Yes
Document Name	
Comment	
Likes 0	
Dislikes 0	
Response	
Thank you for your support.	
Robert Jones - Seattle City Light - 4	
Answer	Yes
Document Name	
Comment	

Likes 0	
Dislikes 0	
Response	
Thank you for your support.	
Carver Powers - Utility Services, Inc. - 4	
Answer	Yes
Document Name	
Comment	
Likes 0	
Dislikes 0	
Response	
Thank you for your support.	
Chris Shultz - Seattle City Light - 5	
Answer	Yes
Document Name	
Comment	
Likes 0	
Dislikes 0	
Response	
Thank you for your support.	

Michael Jang - Seattle City Light - 1	
Answer	Yes
Document Name	
Comment	
Likes 0	
Dislikes 0	
Response	
Thank you for your support.	
Mike Magruder - Avista - Avista Corporation - 1,3,5	
Answer	Yes
Document Name	
Comment	
Likes 0	
Dislikes 0	
Response	
Thank you for your support.	
Ruida Shu - Northeast Power Coordinating Council - 1,2,3,4,5,6,7,8,9,10 - NPCC, Group Name NPCC RSC	
Answer	Yes
Document Name	
Comment	

Likes 0	
Dislikes 0	
Response	
Thank you for your support.	
Jesus Sammy Alcaraz - Imperial Irrigation District - 1	
Answer	Yes
Document Name	
Comment	
Likes 0	
Dislikes 0	
Response	
Thank you for your support.	
Denise Sanchez - Denise Sanchez On Behalf of: Diana Torres, Imperial Irrigation District, 1, 6, 5, 3; George Kirschner, Imperial Irrigation District, 1, 6, 5, 3; Jesus Sammy Alcaraz, Imperial Irrigation District, 1, 6, 5, 3; Tino Zaragoza, Imperial Irrigation District, 1, 6, 5, 3; - Denise Sanchez	
Answer	Yes
Document Name	
Comment	
Likes 0	
Dislikes 0	
Response	
Thank you for your support.	

James Baldwin - James Baldwin On Behalf of: Matt Lewis, Lower Colorado River Authority, 5, 1; - James Baldwin	
Answer	Yes
Document Name	
Comment	
Likes 0	
Dislikes 0	
Response	
Thank you for your support.	
Fon Hiew - NB Power Corporation - New Brunswick Power Transmission Corporation - 5	
Answer	Yes
Document Name	
Comment	
Likes 0	
Dislikes 0	
Response	
Thank you for your support.	
Chantal Mazza - Chantal Mazza On Behalf of: Junji Yamaguchi, Hydro-Quebec (HQ), 1, 5; Nicolas Turcotte, Hydro-Quebec (HQ), 1, 5; - Chantal Mazza	
Answer	Yes
Document Name	
Comment	

Likes 0	
Dislikes 0	
Response	
Thank you for your support.	
Rachel Coyne - Texas Reliability Entity, Inc. - 10	
Answer	Yes
Document Name	
Comment	
Likes 0	
Dislikes 0	
Response	
Thank you for your support.	
Jeffrey Streifling - NB Power Corporation - 1	
Answer	Yes
Document Name	
Comment	
Likes 0	
Dislikes 0	
Response	
Thank you for your support.	

Teresa Krabe - Lower Colorado River Authority - 5	
Answer	Yes
Document Name	
Comment	
Likes 0	
Dislikes 0	
Response	
Thank you for your support.	
Tim Kelley - Tim Kelley On Behalf of: Charles Norton, Sacramento Municipal Utility District, 3, 6, 4, 1, 5; Foung Mua, Sacramento Municipal Utility District, 3, 6, 4, 1, 5; Kevin Smith, Balancing Authority of Northern California, 1; Nicole Looney, Sacramento Municipal Utility District, 3, 6, 4, 1, 5; Ryder Couch, Sacramento Municipal Utility District, 3, 6, 4, 1, 5; Wei Shao, Sacramento Municipal Utility District, 3, 6, 4, 1, 5; - Tim Kelley, Group Name SMUD and BANC	
Answer	Yes
Document Name	
Comment	
Likes 0	
Dislikes 0	
Response	
Thank you for your support.	
Diana Aguas - CenterPoint Energy Houston Electric, LLC - 1 - Texas RE	
Answer	Yes
Document Name	

Comment	
Likes 0	
Dislikes 0	
Response	
Thank you for your support.	
TRACEY JOHNSON - Southern Indiana Gas and Electric Co. - 3,5,6 - RF	
Answer	Yes
Document Name	
Comment	
Likes 0	
Dislikes 0	
Response	
Thank you for your support.	
Leshel Hutchings - AEP - 3	
Answer	Yes
Document Name	
Comment	
Likes 0	
Dislikes 0	
Response	

Thank you for your support.	
Rebika Yitna - Rebika Yitna On Behalf of: Roger Brand, MEAG Power, 3, 1; - Rebika Yitna	
Answer	Yes
Document Name	
Comment	
Likes 0	
Dislikes 0	
Response	
Thank you for your support.	
Matt Carden - Southern Company - Southern Company Services, Inc. - 1	
Answer	Yes
Document Name	
Comment	
Likes 0	
Dislikes 0	
Response	
Thank you for your support.	
Richard Jackson - U.S. Bureau of Reclamation - 1	
Answer	Yes
Document Name	
Comment	

Likes 0	
Dislikes 0	
Response	
Thank you for your support.	
James Keele - Entergy - 3	
Answer	Yes
Document Name	
Comment	
Likes 0	
Dislikes 0	
Response	
Thank you for your support.	
Robert Follini - Avista - Avista Corporation - 3	
Answer	Yes
Document Name	
Comment	
Likes 0	
Dislikes 0	
Response	
Thank you for your support.	

Jessica Cordero - Unisource - Tucson Electric Power Co. - 1	
Answer	Yes
Document Name	
Comment	
Likes 0	
Dislikes 0	
Response	
Thank you for your support.	

3. Do you agree with the modifications made in CIP-014-4 with new Requirement R2 to address the issues identified in the SAR?	
Jessica Cordero - Unisource - Tucson Electric Power Co. - 1	
Answer	No
Document Name	
Comment	
Need further clarification on responsibilities related to separately owned but physically adjacent facilities.	
Likes 0	
Dislikes 0	
Response	
Thank you for your comment. Please see revised Standard.	
James Keele - Entergy - 3	
Answer	No
Document Name	
Comment	
R2.1. terms “line-of-site,” “proximity,” and “ease of access” are interpretive and could result in inconsistent implementation of the standard.R2 should reference Attachment 1 and not R1. “In proximity to those identified in R1” implies you have evaluated Attachment 1 and have the full R1 list and then you have to reapply the proximity criteria to the full list. Consider revising language to state the intent more clearly. For example: {C}· *R2. Each Transmission Owner shall establish a documented criteria for identifying Transmission station(s) and Transmission substation(s) in proximity. The criteria shall be used during the evaluation of Attachment 1 2.1 to identify Transmission station(s) and Transmission substation(s), irrespective of ownership, to be included in the risk assessment.*	

Likes 0	
Dislikes 0	
Response	
Thank you for your comment. Please see revised Standard.	
Matt Carden - Southern Company - Southern Company Services, Inc. - 1	
Answer	No
Document Name	
Comment	

Southern Company seeks further clarification on the proposed requirement focused on physical proximity as outlined in the criteria 2.1.1, 2.1.2, and 2.1.3. While we understand the intent behind these criteria is to enhance the resilience of the bulk power system against physical threats, we believe that the current language presents ambiguities that could lead to varied interpretations and implementation challenges across the industry. We respectfully request additional guidance on the following aspects:

Criteria Inclusions (2.1): The requirement should clarify whether the inclusion of all criteria in 2.1.1, 2.1.2, and 2.1.3 must be considered or does it imply that at least one of the criteria in 2.1.1, 2.1.2, and 2.1.3 must be considered.

Definition of Line-of-Sight (2.1.1): The requirement for "line-of-sight between multiple Transmission station or Transmission substation yards from a single site" raises questions about the specific conditions that constitute line-of-sight. For instance, does this criterion consider natural topography, existing infrastructure, or potential future developments that might obstruct the line-of-sight? Clarification on what constitutes an acceptable line-of-sight and any allowable exceptions would be beneficial for compliance planning.

Ease of Access from a Common Public Roadway (2.1.2): This criterion appears to prioritize ease of access from common public roadways but does not specify the degree of access required or how "ease of access" is measured. Different terrains and urban planning constraints could significantly impact the feasibility of this requirement. We suggest defining what constitutes "ease of access" and whether there are acceptable variances depending on geographic or jurisdictional factors.

Proximity and Impact of a Single Event (2.1.3): The requirement that "Transmission station or Transmission substation yards are in close enough proximity that a single event can impact multiple Transmission stations or substations" is particularly concerning due to its broad

implications. We request clarification on the types of events considered under this criterion and guidance on how to assess the potential impact radius. Since the above criteria, even with added specification, presents ambiguities that could lead to varied interpretations and implementations, Southern Company recommends a clear criterion that would include a defined physical radius, such as 100 yards, based on a technically justified single event. This would provide clear guidance that could be consistently adhered to.	
Likes 0	
Dislikes 0	
Response	
Thank you for your comment. Please see revised Standard.	
Kevin Conway - Western Power Pool - 4	
Answer	No
Document Name	
Comment	
: The Drafting Team identified a list of items to be included in the documented criteria, however, the approach is vague and requires TOs to evaluate substations "…in proximity to…[and] irrespective of ownership…" to the identified substations from R1. In practice, how would a TO of one company, especially a smaller company, be able to determine the criteria of another, independent company? "In proximity" is vague at best, overly broad at worst. How would an entity determine what is 'in proximity"? In R 2.1.1 the Drafting team uses the term "line-of-site" which is also vague. Line of site from where? The ground? A local elevation? A mountain? Especially in the western half of the United States, where there is a large hill overseeing a broad plain, line of site could extend for over 20 miles, and the complete service territory of a TO. R 2.1.2 uses "common public roadway" which seems intuitive, but is actually vague. Public roadways consist of many types of construction and can be many miles from a paved surface. They may be the only way to access certain areas, especially through forested or mountainous areas.	

Both R2.1.1 and R 2.1.2 are good examples of the problems with the concept the Drafting Team is trying to address, and the difficulty with being audited against language that is overly broad and flexible. Standards language should limit the auditor's ability to use subjective judgement, and provide objective and measurable performance.	
Likes 0	
Dislikes 0	
Response	
Thank you for your comment. Please see revised Standard.	
Jennie Wike - Jennie Wike On Behalf of: John Merrell, Tacoma Public Utilities (Tacoma, WA), 1, 4, 5, 6, 3; - Jennie Wike, Group Name Tacoma Power	
Answer	No
Document Name	
Comment	
Tacoma Power supports the MRO NSRF comments, as follows. The MRO NSRF recommends including the entity's consideration of physical proximity criteria within R3, as it is part of the risk assessment methodology, rather than a standalone Requirement. In addition, the criterion in the sub Parts of R2 are insufficiently bounded. For example: - 2.1.1: On the flat stretches of land which make up much of the middle U.S. and Canada, line of sight can be very long distances, 10 miles or more. -2.1.2: A common public roadway can stretch thousands of miles [U.S. Route 20 is 3,365 miles long]. -2.1.3: Mentions a single event, without bounding it as a physical attack event This vagueness will result in too much subjectiveness during audits, and will likely be viewed differently between an entity and auditor, and even between REs. This is already occurring as illustrated in recent presentations from MRO and WECC which offer differing guidance on	

threat approaches. In the July 26, 2023 MRO CMEP conference, MRO was focused on the "smoking crater" scenario as a Must Have. However, at the recent March 26-27, 2024, WECC Reliability & Security Conference, WECC provided Real-World findings and Lessons Learned that vehicle borne improvised explosive devices are not a likely attack vector and may lead to misallocation of resources on unlikely threats. The threats most entities see are gunfire and copper theft. (These presentations are available on the REs' websites).

An additional challenge with the expansion of R2 to include physically adjacent stations "irrespective of ownership" is which entity is responsible under CIP-014 for protection of stations that are deemed critical and those nearby. Are both entities responsible for implementing physical protections? In the event both substations are determined applicable and a risk assessment performed, what if the separate entities' risk assessments have different conclusions or recommendations?

This also introduces additional complexities in communications between the entities, including the third party risk assessment. The MRO NSRF recommends establishing a timeline by which entities with proximate substations be required to respond to communications from Transmission Owners and the third parties performing risk assessments so there is a level of assurance that the initiating entity can meet all their required timelines.

The MRO NSRF offers additional options to adjust the criteria around physical proximity:

1. Eliminate the currently drafted sub-parts 2.1.1 – 2.1.3, and instead require that each entity establish physical proximity criteria, based on probabilistic threats for likely and realistic scenarios. This could include the requirement to consider attack history on similar facilities by frequency, proximity, and severity when developing the criteria. This would allow each entity to determine their best definition of physical proximity based on their unique geographic areas and threats.

2. Replace criteria 2.1.1-2.1.3 with a single criterion for physical distance, "Multiple Transmission station or Transmission substation yards located within a distance of no more than 600 feet between station or substation fences."

3. Develop criteria (e.g. weighting) for small proximate entities so that a threshold must be met to qualify. This would serve to minimize the effort in addressing small (low reliability risk to the BES) facilities.

4. Eliminate the possibility for multiple owners by revising CIP-014 to focus on single entity scenarios.

Likes 0	
Dislikes 0	

Response
Thank you for your comments. Please see MRO NSRF comment response.

Rebika Yitna - Rebika Yitna On Behalf of: Roger Brand, MEAG Power, 3, 1; - Rebika Yitna	
Answer	No
Document Name	
Comment	
The criteria for 'proximity' is subjective and could lead to different conclusions/viewpoints between the Responsible Entity and an auditor. Additional consideration is needed for Transmission station(s) or Transmission substation(s) in proximity to those identified in R1, particularly if those station(s)/substation(s) in proximity are found to be applicable and of differing ownership. This could affect an entity's ability to properly protect (harden) the station(s)/substation(s) as well as the ability to develop a Physical Security Plan that sufficiently addresses the vulnerabilities and threats. It is requested that the SDT consider the following: • How does one entity coordinate with another entity from adjacent station(s)/substation(s) to gather the necessary data of the identified applicable station(s)/substation(s) to properly develop a Physical Security Plan? • How are different conclusions/recommendations addressed between two entities' risk based assessment documentation in designating whether an adjacent station(s) or substation(s) is applicable where each entity may have different 'proximity' criteria?	
Likes 0	
Dislikes 0	

Response
Thank you for your comment. Please see revised Standard.

Lidija Efremova - Lidija Efremova On Behalf of: Emma Halilovic, Hydro One Networks, Inc., 1; - Lidija Efremova	
Answer	No
Document Name	

Comment
The new R2 as it relates to proximity is vague and does not provide adequate direction to TOs on methodology or how best to evaluate proximity. We understand that all regions have unique challenges and must evaluate on a case by case basis but this is a prime candidate for a revision of the standard to ensure entities are following a prescribed methodology. {C}1. Is it the expectation that upon an audit the TO will have to show some documentation understanding that all entities will have different forms/levels of evaluating proximity? {C}2. Should the proximity criteria be applied after the initial run of applicable stations OR this should be done on all transmission stations whereby a completely a new set of stations that can arise. Example 1 – Risk Assessment (as per normal practice) à use this list to then apply proximity rules to identify additional stations as a subset Example 2 – Risk Assessment (as per normal practice), + Proximity Rules applied to ALL stations. (this would be used to identify two NON applicable stations that when combined meet criteria…)

Likes 0	
Dislikes 0	
Response	
Thank you for your comment. Please see revised Standard.	
Kelley Sargent - Puget Sound Energy, Inc. - 3	
Answer	No
Document Name	

Comment
Our understanding is that R2 proximity criteria is seeking station groups with stations that are individually non-applicable under Attachment 1 Table 1, but when combined with other non-applicable stations based on proximity, may meet Attachment 1 applicability criteria. This is based on Attachment 1 Section 2.1, which seeks to combine stations – "that individually are not applicable". If so, the current language of R2 does not agree with Attachment 1 Section 2.1. The current requirement does not define clearly of when proximity criteria is applicable. It will be helpful if the technical rationale document can show diagrams for possible scenarios for combining stations – NA (Non-applicable) & A (Applicable), A & A and NA & NA. R2 proximity criteria applies to the NA & NA set. A non-applicable station in proximity to an applicable station should be exempt from R2.

Likes 0	
Dislikes 0	

Response
Thank you for your comment. Please see revised Standard.

Lucinda Bradshaw - Oncor Electric Delivery - 1 - Texas RE	
Answer	No
Document Name	

Comment
Oncor does not agree that the modifications made in CIP-014-4 Requirement R2 to address the issues identified in the SAR because its proposed sub-requirements are ambiguous and fail to create the consistent approach in the identification of infrastructure critical to the operation of the BPS as sought with the SAR. Due to varying geographical locations of facilities and the overall flexibility to document the criteria used to determine proximity, inconsistencies in approaches to perform risk assessments will remain. We recommend that the R2.1 sub requirements be replaced with specific and measurable criteria. For example, the Director of National Intelligence Joint Counterterrorism Assessment Team (JCAT) has published bomb threat standoff distances in which the mandatory evacuation distances for an SUV/VAN

explosive threat is 400 feet. Guidelines such as these are used by Physical Security Professionals when performing the evaluation required by CIP-014-3 R6. For consistency, we recommend that a distance between 400 feet to 1000 feet be specified in CIP-014-4 R2. Additionally, we request clarification of the proposed R2 language concerning voltage classes applicable to stations in proximity. While the proposed R2 language points to R1 stations concerning proximity, and R1 points to Attachment 1, in which lines less than 200 kV are not applicable, it is unclear that the same “less than 200 kV” exclusion applies to those facilities that are in physical proximity to facilities to which R1 is applicable. We request that R2 be clarified to state that only facilities above 200 kV and in proximity to applicable facilities under R1 are to be considered.	
Likes 0	
Dislikes 0	
Response	
Thank you for your comment. Please see revised Standard.	
Alison Nickells - NiSource - Northern Indiana Public Service Co. - 1 - RF	
Answer	No
Document Name	
Comment	
. ”Line of sight" is not defined clearly. Clarification is needed to determine if it refers to the highest point (i.e., the pole/microwave tower) in the substation yard or does "line of sight" refer to ground level in the substation yard? Additionally, “event” is not clearly scoped. "Irrespective of ownership" language entangles Responsible Entities. Transmission substations seem to be moving away from the 100kV bright-line NERC criteria in the latest CIP-002-Y draft. Therefore, transmission substations owned by other Transmission Owners will require Registered Entities to evaluate substations that they do not own. This will require entities to dedicate unknown resources to be engaged with the other Responsible Entity(ies) in the 36 month timeframe to conduct the assessments.	
Likes 0	
Dislikes 0	

Response	
Thank you for your comment. Please see revised Standard.	
Michele Tondalo - United Illuminating Co. - 1	
Answer	No
Document Name	
Comment	

Comment 5: In CIP-014-4 R2 and Attachment 1 the terms “Transmission station”, “Transmission substation”, “Transmission facilities”, and “substation yards” are used in similar context. Suggest that the terms used in the standard be reviewed to ensure that any changes in terminology are intentional.

Comment 6: In the context of CIP-014-4 R2 line-of-sight can have significantly different impacts when considering other factors such as time of year (leaves on trees vs. not on trees), urban vs. rural, etc. In an urban setting a station could be a block or two away and not be considered line-of-sight but still be extremely close. Suggest that R2.1 wording be changed to the following: “The criteria shall at a minimum consider the following…” Using the term “consider” would allow for Transmission Owners to document in their rationale how the considerations like line of sight is, or is not used.

Comment 7: In multiple places in the standard the term “…or…” is used, e.g., R2.1.1 “…Transmission station or Transmission substation yards…” Suggest that these instances be reviewed and reworded to include “…and/or…” as appropriate.

Comment 8: Attachment 1 Item 2.1 references the ability to combine stations that are “..individually not applicable…” so that they are included in the CIP-014 assessment with a combined Average Weighted value. However, R2 is identified as for defining how to determine proximity considerations for stations “…in proximity to those identified in Requirement R1…”

Suggest that R2 be reworded as follows:

“…in proximity to those identified in Requirement R1, or through Attachment 1 Criterion 2.1, irrespective of ownership, that shall be included in the risk assessment.”

Likes 0	

Dislikes 0	
Response	
Thank you for the comment. Please see modifications to the standard.	
Michele Shafer - New York State Electric & Gas (NYSEG) - 6	
Answer	No
Document Name	
Comment	

- In CIP-014-4 R2 and Attachment 1 the terms “Transmission station”, “Transmission substation”, “Transmission facilities”, and “substation yards” are used in similar context. Suggest that the terms used in the standard be reviewed to ensure that any changes in terminology are intentional.
- In the context of CIP-014-4 R2 line-of-sight can have significantly different impacts when considering other factors such as time of year (leaves on trees vs. not on trees), urban vs. rural, etc. In an urban setting a station could be a block or two away and not be considered line-of-sight but still be extremely close. Suggest that R2.1 wording be changed to the following: “The criteria shall at a minimum **consider** the following…” Using the term “consider” would allow for Transmission Owners to document in their rationale how the considerations like line of sight is, or is not used.
- In multiple places in the standard the term “…or…” is used, e.g., R2.1.1 “…Transmission station or Transmission substation yards…” Suggest that these instances be reviewed and reworded to include “…**and/or**…” as appropriate.
- Attachment 1 Item 2.1 references the ability to combine stations that are “..individually not applicable…” so that they are included in the CIP-014 assessment with a combined Average Weighted value. However, R2 is identified as for defining how to determine proximity considerations for stations “…in proximity to those identified in Requirement R1…”
  Suggest that R2 be reworded as follows:
  “…in proximity to those identified in Requirement R1**, or through Attachment 1 Criterion 2.1**, irrespective of ownership, that shall be included in the risk assessment.”

Likes 0	
Dislikes 0	
Response	

Thank you for the comment. Please see modifications to the standard.	
Anna Martinson - MRO - 1,2,3,4,5,6 - MRO, Group Name MRO Group	
Answer	No
Document Name	
Comment	

The MRO NSRF recommends including the entity's consideration of physical proximity criteria within R3, as it is part of the risk assessment methodology, rather than a standalone Requirement.

In addition, the criterion in the sub Parts of R2 are insufficiently bounded. For example:

- 2.1.1: On the flat stretches of land which make up much of the middle U.S. and Canada, line of sight can be very long distances, 10 miles or more.

- 2.1.2: A common public roadway can stretch thousands of miles [U.S. Route 20 is 3,365 miles long].

- 2.1.3: Mentions a single event, without bounding it as a physical attack event

This vagueness will result in too much subjectiveness during audits, and will likely be viewed differently between an entity and auditor, and even between REs. This is already occurring as illustrated in recent presentations from MRO and WECC which offer differing guidance on threat approaches. In the July 26, 2023 MRO CMEP conference, MRO was focused on the "smoking crater" scenario as a Must Have. However, at the recent March 26-27, 2024, WECC Reliability & Security Conference, WECC provided Real-World findings and Lessons Learned that vehicle borne improvised explosive devices are not a likely attack vector and may lead to misallocation of resources on unlikely threats. The threats most entities see are gunfire and copper theft. (These presentations are available on the REs' websites).

An additional challenge with the expansion of R2 to include physically adjacent stations "irrespective of ownership" is which entity is responsible under CIP-014 for protection of stations that are deemed critical and those nearby. Are both entities responsible for implementing physical protections? In the event both substations are determined applicable and a risk assessment performed, what if the separate entities' risk assessments have different conclusions or recommendations?

This also introduces additional complexities in communications between the entities, including the third party risk assessment. The MRO NSRF recommends establishing a timeline by which entities with proximate substations be required to respond to communications from

Transmission Owners and the third parties performing risk assessments so there is a level of assurance that the initiating entity can meet all their required timelines.

The MRO NSRF offers additional options to adjust the criteria around physical proximity:

1. Eliminate the currently drafted sub-parts 2.1.1 – 2.1.3, and instead require that each entity establish physical proximity criteria, based on probabilistic threats for likely and realistic scenarios. This could include the requirement to consider attack history on similar facilities by frequency, proximity, and severity when developing the criteria. This would allow each entity to determine their best definition of physical proximity based on their unique geographic areas and threats.

2. Replace criteria 2.1.1-2.1.3 with a single criterion for physical distance, “Multiple Transmission station or Transmission substation yards located within a distance of no more than 600 feet between station or substation fences.”

3. Develop criteria (e.g. weighting) for small proximate entities so that a threshold must be met to qualify. This would serve to minimize the effort in addressing small (low reliability risk to the BES) facilities.

4. Eliminate the possibility for multiple owners by revising CIP-014 to focus on single entity scenarios.

Likes 1	Lincoln Electric System, 1, Johnson Josh
Dislikes 0	

Response

Thank you for the comment. Please see modifications to the standard.

Brian Millard - Tennessee Valley Authority - 1,3,5,6 - SERC, Group Name TVA RBB	
Answer	No
Document Name	
Comment	

TVA disagrees with the changes to R2 given the requirement's lack of focus on plausible and likely physical attacks, as well as the general lack of flexibility for a Functional Entity to define events based on evidence which may trigger the evaluation of separate facilities in aggregate. Additionally, R2 should require that stations evaluated for proximity be Applicable stations per Attachment 1 and the applicability criteria.

TVA proposes two (2) alternative phrasings of R2, requirement R2.1:

2.1. The criteria shall, at a minimum, include whether the Transmission station or Transmission substation yards are in close enough proximity that a single event can impact multiple Transmission stations or Transmission substations. Determining the proximity of Transmission station or Transmission substation yards that may be impacted by a single event may include:

2.1.1. Line-of-sight between multiple Transmission station or Transmission substation yards from a single site.

2.1.2. Ease of access from a common public roadway that exists between multiple Transmission station or Transmission substation yards.

2.1.3. Historical event analysis or threat assessment.

----- OR -----

2.1. The criteria shall at a minimum include the following:

2.1.1. Line-of-sight between multiple Transmission station or Transmission substation yards from a single site **and**,

2.1.2. Ease of access from a common public roadway that exists between multiple Transmission station or Transmission substation yard **and**,

2.1.3. The Transmission station or Transmission substation yards are in close enough proximity that a single event can impact multiple Transmission stations or Transmission substations **based on analysis of previous events or threat assessment**.

Likes 0	

Dislikes 0	
Response	
Thank you for your comment. Please see revised Standard.	
Alan Kloster - Alan Kloster On Behalf of: Jeremy Harris, Evergy, 3, 5, 1, 6; Kevin Frick, Evergy, 3, 5, 1, 6; Marcus Moor, Evergy, 3, 5, 1, 6; Tiffany Lake, Evergy, 3, 5, 1, 6; - Alan Kloster	
Answer	No
Document Name	
Comment	
Evergy supports and incorporates by reference the comments of the Edison Electric Insitute (EEI) and MRO NSRF for question #3.	
Likes 0	
Dislikes 0	
Response	
Thank you for your comments. Please see MRO NSRF and EEI comment responses.	
Leshel Hutchings - AEP - 3	
Answer	No
Document Name	
Comment	
Remove 2.1 and all sub-bullets.	

Line-of-sight, ease of access, and close physical proximity are vague language open for interpretation – makes this difficult to audit and determine compliance. Can the SDT replace 2.1.1-2.1.3 with a distance radius without specifying the type of attack (i.e. 1000 ft of separation between station perimeters?).

We are concerned that a TO may have a methodology and technical rationale based on historical or active threats to their system but that an auditor may have a completely different threat vector in their mind to protect against. The standard language should be such that it is decisively and objectively clear that an entity is in compliance.

Additionally, the intent is to identify close physical proximity such that a singular event could impact both stations; other ranges are irrelevant.

Emphasize explicitly in the standard language or Guidelines and Technical Basis that this considers only a single, simultaneous attack.

Considering non-simultaneous attacks makes the number of scenarios infinite and is not feasible to analyze or protect against. Bringing in proximity factors like “a common public roadway” alludes to non-simultaneous attack and should be removed. SDT may want to consider a closed conversation with the E-ISAC for an industry-wide perspective from security professionals on the calculated risk of simultaneous BES substation attacks and the most significant threat vectors seen by North American utilities.

Likes 0	
Dislikes 0	

Response
Thank you for your comment. Please see revised Standard.

Cain Braveheart - Bonneville Power Administration - 1,3,5,6 - WECC	
Answer	No
Document Name	

Comment
BPA believes interpretation of the proximity text is highly subjective, and is confusing because it is not tied to a threat vector. In crossing ownership lines, in failing to explicitly limit ownership to other Registered Entities subject to NERC regulations, and in implying some level of coordination will result, the language seems more suited to one of the transmission planning functions rather than the Transmission Owner

function. There is also insufficient detail about which entities will be expected to take actions, and what actions, once one entity deems another entity's site "critical" due to proximity. Are the added sites required to be protected, or can they be studied and ruled out for added security protections? One interpretation suggests that a requirement to circle back and perform multiple studies is being created. The original intent of CIP-014 was to identify a very small number of the absolutely most critical substations. Requiring Registered Entities to expand their lists using proximity as a criterion in R2 is contrary to the original intent of the standard.	
Likes 0	
Dislikes 0	
Response	
Thank you for your comment. Please see revised Standard.	
Karen Demos - NextEra Energy - Florida Power and Light Co. - 3	
Answer	No
Document Name	
Comment	
NextEra/FPL supports EEI's comments	
Likes 0	
Dislikes 0	
Response	
Thank you for your comments. Please see EEI comment response.	
Ben Hammer - Western Area Power Administration - 1	
Answer	No
Document Name	

Comment
WAPA recommends including the entity's consideration of physical proximity criteria within R3, as it is part of the risk assessment methodology, rather than a standalone Requirement. In addition, WAPA concurs with the comments provided by the MRO NSRF. WAPA has significant concerns around the ambiguity and the potential that the number of "groups" of substations now bounded by physical security criteria would lead to a double or triple of sites requiring assessment. WAPA concurs with additional options provided by the MRO NSRF to adjust the criteria around physical proximity.

Likes 0	
Dislikes 0	

Response
Thank you for your comments. Please see MRO NSRF comment response.

Michael Dillard - Austin Energy - 5, Group Name Austin Energy	
Answer	No
Document Name	

Comment
Austin Energy supports MRO's comments. Attached in Question 1.

Likes 0	
Dislikes 0	

Response
Thank you for your comments. Please see MRO NSRF comment response.

Anne Kronshage - Public Utility District No. 1 of Chelan County - 6, Group Name Public Utility District No. 1 of Chelan County - Voting Group	
Answer	No
Document Name	
Comment	
Requirement R2.1.1 may cause a significant increase in the number of applicable facilities to include in the risk assessment that may not effectively achieve the intent of the changes as explained in the NERC report entitled, *Evaluation of the Physical Security Reliability Standard and Physical Security Attacks to the Bulk-Power System*. The report focused on the intent of modifying existing Reliability Standards for sake of improving BPS resiliency to physical attacks events such as those that occurred in Moore County, NC in 2022 and identified a lack of consistency. In these events, as well as others referenced in the report, transformers have more frequently been damaged by means of ballistic attack. Use of the term "line-of-sight" will likely require clarification in each TOP's documented criteria and possibly introduce more inconsistency amongst TOP risk assessments. Instead, changing the minimum requirement listed by R2.1.1 to require entities to study the loss of power transformers in applicable stations accomplishes the goal of assessing the impacts caused by ballistic attacks to the equipment most likely to be victim of these events, while also improving assessment consistency amongst TOPs. *See further comments from the previous item as well.*	
Likes 0	
Dislikes 0	
Response	
Thank you for your comment. Please see revised Standard.	
Richard Vendetti - NextEra Energy - 5	
Answer	No
Document Name	
Comment	

NEE support's EEI comments: "EEI proposes the following modification:

R2. Each Transmission Owner shall establish and implement**apply** documented criteria for identifying Transmission station(s) and Transmission substation(s) in proximity to those identified in Requirement R1, irrespective of ownership, that shall be included in the risk assessment. "

Likes 0	
Dislikes 0	

Response

Thank you for your comments. Please see EEI comment response.

Donna Wood - Tri-State G and T Association, Inc. - 1

Answer	No
Document Name	

Comment

Tri-State agrees with the MRO NSRF Submitted Comments

Likes 0	
Dislikes 0	

Response

Thank you for your comments. Please see MRO NSRF comment response.

Tim Kelley - Tim Kelley On Behalf of: Charles Norton, Sacramento Municipal Utility District, 3, 6, 4, 1, 5; Foung Mua, Sacramento Municipal Utility District, 3, 6, 4, 1, 5; Kevin Smith, Balancing Authority of Northern California, 1; Nicole Looney, Sacramento Municipal Utility District, 3, 6, 4, 1, 5; Ryder Couch, Sacramento Municipal Utility District, 3, 6, 4, 1, 5; Wei Shao, Sacramento Municipal Utility District, 3, 6, 4, 1, 5; - Tim Kelley, Group Name SMUD and BANC	
Answer	No
Document Name	
Comment	
SMUD agrees that proximity criteria are needed in CIP-014-4, however, “proximity” needs to be bound. The proximity criteria should be defined so that all entities can easily determine if the proximity criteria makes a Transmission station or Transmission substation applicable or not. The terms “line of sight”, “ease of access”, and “single event” in sub-requirements R2.1.1, R2.1.2, and R2.1.3, respectively, are all subjective terms and will have different meanings among Transmission Operators. As currently written, CIP-014-4 is not auditable. The Standard Drafting Team should simplify the proximity criteria by creating a fixed, physical distance that can be measured and easily applied by all Transmission Owners. SMUD suggests a fixed distance of 600 feet, regardless of line of sight, or some other fixed distance that makes sense with physical security experts. A fixed physical distance would also eliminate proximity differences between Transmission Owners.	
Likes 0	
Dislikes 0	
Response	
Thank you for your comment. Please see revised Standard.	
Rachel Schuldt - Black Hills Corporation - 6, Group Name Black Hills Corporation - All Segments	
Answer	No
Document Name	
Comment	

Black Hills Corporation disagrees with the proposed new Requirement R2. Black Hills Corporation recommends that the SAR drafting team clearly define criteria to be used in the CIP-014 studies similar to what was done within Table 1 (footnote 11) of TPL-001-5 for defining the criteria of “common structure” circuits. Black Hills Corporation has concerns about leaving vague language that leaves the requirement open to auditor interpretation.	
Likes 0	
Dislikes 0	
Response	
Thank you for your comment. Please see revised Standard.	
Ellese Murphy - Duke Energy - 1,3,5,6 - Texas RE,SERC,RF	
Answer	No
Document Name	
Comment	
Duke Energy would like to see clarity that the criteria in R2 are tied to likely threat vectors and the protections that can be reasonably implemented. The ambiguity in threat vector makes how to perform the evaluation of the criteria in R2.1 unclear. Duke Energy supports the inclusion of criterion 2.1.1 but proposes that any additional criteria be determined by the entity based by likely threats identified by the entity. As written today, the criteria in R2 and the R3 risk assessment methodology do not clearly align.	
Likes 0	
Dislikes 0	
Response	
Thank you for your comment. Please see revised Standard.	
Sean Bodkin - Dominion - Dominion Resources, Inc. - 6, Group Name Dominion	
Answer	No
Document Name	

Comment
While Dominion Energy supports EEI comments in general, Dominion Energy does not agree with the modifiactions as Entities are not capable of assessing risk and obtaining the required information to assess any risks for facilities that are not owned by the Entity. For R2.1 this requirement is not feasible, and it incurs unreasonable expenses for a limited reliability benefit. The impact of a facility in line of sight is an extreme contingency and does not add a reliability value based on the cost to study and potentially upgrade a station merely because of proximity. Dominion Energy agrees that R2.1.2 is appropriate to be considered for an identified facility but not in the evaluation of a facility that is high risk to grid reliability. R2.1.3 is an extreme contingency that is unlikely to occur and there is no value in adding this to the identification or study process.

Likes 0	
Dislikes 0	

Response
Thank you for your comment. Please see revised Standard.

John Pearson - ISO New England, Inc. - 2	
Answer	No
Document Name	

Comment
Regarding *3.2. "Analysis at System peak, Off-Peak Load, and other System conditions susceptible to instability, uncontrolled separation, or Cascading within an Interconnection shall be conducted in dynamic and steady state simulations."* Please clarify what other conditions are, i.e. further describe case assumptions.

Likes 0	
Dislikes 0	

Response	
Thank you for your comment. Please see revised Standard.	
Joshua London - Eversource Energy - 1, Group Name Eversource	
Answer	No
Document Name	
Comment	
Eversource believes that this section needs to be re-written such that the only criteria is the physical distance between stations/yards. The reason why this section should be changed is that "line-of-sight" is subjective, changes throughout the year (leaves on trees), and may vary based on elevation changes (using a ladder or drone). "Common public roadway" is undefined and irrelevant since a private roadway or ATV trail is just as relevant. For R1.3, represent "in close enough proximity" as a physical distance.	
Likes 0	
Dislikes 0	
Response	
Thank you for your comment. Please see revised Standard.	
Israel Perez - Israel Perez On Behalf of: Laura Somak, Salt River Project, 3, 6, 5, 1; Mathew Weber, Salt River Project, 3, 6, 5, 1; Thomas Johnson, Salt River Project, 3, 6, 5, 1; Timothy Singh, Salt River Project, 3, 6, 5, 1; - Israel Perez	
Answer	No
Document Name	
Comment	
SRP supports the MRO NSRF with Tacoma Power's comments. In addition, when there are multiple facilities owned by different entities in close proximity to each other that individually would not be in scope, would this requirement make one or more facilities now applicable to CIP-014 if assessed together?	

How are entities supposed to deal with this scenario? Does an entity have to get with the other entity to make sure their security plan works with each other's plan? What is the expectation for an entity to do we do with other entity's information?	
Likes 0	
Dislikes 0	
Response	
Thank you for your comment. Please see revised Standard.	
Teresa Krabe - Lower Colorado River Authority - 5	
Answer	No
Document Name	
Comment	
This could prove to be challenging and inconsistent. An Entity is required to study facilities owned by other Registered Entities but then what? What if one of the proximity stations is deemed critical from the planning process? Who would be responsible for ensuring that these facilities are adequately protected. What if a facility is low voltage (69kV) and the owner is not registered with NERC; how will this be handled? R2 creates a requirement but does not give any guidance on how to implement.	
Likes 0	
Dislikes 0	
Response	
Thank you for your comment. Please see revised Standard.	
Dave Krueger - SERC Reliability Corporation - 10	
Answer	No
Document Name	
Comment	

Thank you for the chance to comment, SERC appreciates the complexity of the SDT's task of modifying multiple parts of such a high-profile and high-priority standard.

· Item #2.A R2.1.1 includes the term "line-of-sight" as a criteria, which is nebulous and difficult to demonstrate in compliance evidence; providing clear expectations on inclusion is part of the SAR, both in Project Scope #4: "*Clarify what study scenario(s) and other study assumptions are appropriate and reasonable considering the intent of CIP-014-3 and the potential range of issues during a physical attack…"* and SAR Detailed Description #5. One key issue with using line of sight (especially away from a transmission right-of-way is that it changes over time). For example, today a forest of trees obscures a common viewpoint from seeing two substations – but after logging activity or when leaves fall off trees in autumn, now a clear line of sight exists. Another field observed example is where two substations exist near a flat suburban area with dense tree and vegetation cover, but in a few months a low-rise office building offers a new vantage point. Line-of-sight locations usable by an attacker may also not be able to be accurately assessed if the utility does not have legal permission to access privately owned land or structures adjacent to their substation. We would note that the similar term "Clear line of sight" is footnoted in FAC-003-4, however this is not in a security context and applies to Right of Way areas that are generally free of vegetation, as well as disallowing the use of magnified optics. The SDT should consider instead using a specific distance metric that can be readily calculated in a GIS or similar system, is preserved and demonstrable/conclusively measurable as evidence during compliance monitoring, consistent when two or more Responsible Entities own substation Elements in proximity and would allow for reassessment if planned new construction or substation expansion will occur in the 36-month R1 study window. We might suggest the proximity discussion instead look at a 1-kilometer radius from any point, where if any Transmission Element from one substation is within 2 kilometers of another Transmission Element, those would be considered as a proximity group or locus to be studied together. This (or a substitute distance of the SDT's choosing) would represent the maximum probable effective engagement distance of a BES Element-sized target by an attacker.

· Item #2.B R2.1.1 includes the term "line-of-sight" as a criteria. While this phrase did come from NERC's CIP-014-3 R1 Practice Guide as items to question/consider, in a compliance requirement this is likely inadequate to describe the susceptibility of a group of Transmission Elements to a common attack. This may inappropriately simplify attack methods, contrary to what the SAR outlines in Project Scope #4: "*Clarify what study scenario(s) and other study assumptions are appropriate and reasonable considering the intent of CIP-014-3 and the potential range of issues during a physical attack…"* Line-of-sight is largely an issue for direct fire type attacks, but is not a sufficient enough discriminator to cover for other ranges of attack types (such as surreptitious entry or insider threat), or for groups of attackers who are coordinated/mobile during an attack event – as seen in the attacks in Moore County NC in 2022, the Pacific Northwest in 2022, and Idaho in 2023. The use of a proximity based metric (mentioned in Item 2.A above) could alleviate some of these concerns.

· Item #2.C R2.1.3 mentions proximity for a “single event”. While the context of a “single event” (happening in a very precise, sub-second timeframe) does make some sense for dynamic studies, a history of physical attacks in Metcalf in 2013, Arkansas in 2013, Moore County NC in 2022, the Pacific Northwest in 2022, and Idaho in 2023 (among others) has shown that actual attacks can consist of multiple attackers/sequential attack actions (see comment Item #2.B above for examples) which may effect the steady state of the BES over a slightly longer timeframe (minutes) vs the dynamic (seconds/cycles). Suggest that the “single event” language be limited to dynamic studies, or eliminated. · Item #2.D R2.1.3 mentions proximity for a “single event”. Is it correct to read that this ‘single event’ would involve both the loss of communication and system protection in R3.6 as well followed by the introduction of the fault characteristics of R3.3? Or would that be considered multiple “events”? · Item #2.E R2 states, “irrespective of ownership”, so would transmission planners be reliant on access to information (in R1, R2, and R3.6, especially if it involves details of installations in the future as far as 36 months) that may be difficult to get from neighboring entities for purposes of setting up and accurately performing their analysis? If so, the SDT may want to consider adding a requirement that neighboring entities receiving requests for information related to CIP-014 must comply with providing the necessary information for study purposes, or some remedy for communication requests that are not responded to.

Likes 0	
Dislikes 0	

Response
Thank you for your comment. Please see revised Standard.

Jeffrey Streifling - NB Power Corporation - 1	
Answer	No
Document Name	

Comment
We are unsure what the Drafting team meant by “proximity to” in R2 and part 2.1.3.

We are unsure what a “common public roadway” is. How is common public roadway different from a public roadway. Additionally, what does “Ease of access” mean for a Common Public roadway?	
Likes 0	
Dislikes 0	
Response	
Thank you for your comment. Please see revised Standard.	
Mark Flanary - Midwest Reliability Organization - 10	
Answer	No
Document Name	
Comment	
As the Requirement is currently written there is no obligation to review the stations or substations identified for risk assessment due to proximity after the initial creation. Consider adding a timing component in R2 such as "at least every 36 months." The phrase “in proximity to those identified in Requirement R1” is not appropriate as the purpose is to find even substations that are “individually are not applicable, but are applicable when combined based on physical adjacency”. Consider removing from the Requirement "in proximity to those identified in Requirement R1". While the Requirement takes a step towards addressing proximity by providing Entities flexibility in their criteria it also provides a lot of room for interpretation by Entities, unaffilicated third party verifiers, and oversight. Consider adding to the Technical Rationale guidance or examples regarding what "line-of-sight" and "close enough proximity" mean.	
Likes 0	
Dislikes 0	
Response	

Thank you for your comment. Please see revised Standard.	
Chantal Mazza - Chantal Mazza On Behalf of: Junji Yamaguchi, Hydro-Quebec (HQ), 1, 5; Nicolas Turcotte, Hydro-Quebec (HQ), 1, 5; - Chantal Mazza	
Answer	No
Document Name	
Comment	
We are unsure what the Drafting team meant by “proximity to” in R2 and part 2.1.3. We are unsure what a “common public roadway” is. How is common public roadway different from a public roadway. Additionally, what does “Ease of access” mean for a Common Public roadway?	
Likes 0	
Dislikes 0	
Response	
Thank you for your comment. Please see revised Standard.	
Fon Hiew - NB Power Corporation - New Brunswick Power Transmission Corporation - 5	
Answer	No
Document Name	
Comment	
We are unsure what the Drafting team meant by “proximity to” in R2 and part 2.1.3.	

We are unsure what a “common public roadway” is. How is common public roadway different from a public roadway. Additionally, what does “Ease of access” mean for a Common Public roadway?	
Likes 0	
Dislikes 0	
Response	
Thank you for your comment. Please see revised Standard.	
Andy Fuhrman - Andy Fuhrman On Behalf of: Theresa Allard, Minnkota Power Cooperative Inc., 1; - Andy Fuhrman	
Answer	No
Document Name	
Comment	
MPC concurs with the MRO NSRF’s comments.	
Likes 0	
Dislikes 0	
Response	
Thank you for your comments. Please see MRO NSRF comment response.	
Hillary Creurer - Allete - Minnesota Power, Inc. - 1	
Answer	No
Document Name	
Comment	
Minnesota Power supports MRO-NSRF and EEI's comments.	

Likes 0	
Dislikes 0	
Response	
Thank you for your comments. Please see MRO NSRF and EEI comment responses.	
David Jendras Sr - Ameren - Ameren Services - 3	
Answer	No
Document Name	
Comment	
Ameren supports EEI's comments on this project.	
Likes 0	
Dislikes 0	
Response	
Thank you for your comments. Please see EEI comment response.	
Kristine Martz - Edison Electric Institute - NA - Not Applicable - NA - Not Applicable	
Answer	No
Document Name	
Comment	
EEI proposes the following modification:	

R2. Each Transmission Owner shall establish and **apply** documented criteria for identifying Transmission station(s) and Transmission substation(s) in proximity to those identified in Requirement R1, irrespective of ownership, that shall be included in the risk assessment.	
Likes 0	
Dislikes 0	
Response	
Thank you for your comment. Please see revised Standard.	
Stephen Stafford - Stephen Stafford On Behalf of: Greg Davis, Georgia Transmission Corporation, 1; - Stephen Stafford	
Answer	No
Document Name	
Comment	
The concept of the risk assessment in the currently approved standard and this draft is ambiguous and is interpreted differently across the industry. The standard requirements need additional clarification as to what type of risk (explosive, gunshot, etc) the TO should be protecting against. It is important to keep in mind that the clarification on the risk should take into account the premise that physical security measures may be installed pursuant to the assessment of this risk.	
Likes 0	
Dislikes 0	
Response	
Thank you for your comment. Please see revised Standard.	
James Baldwin - James Baldwin On Behalf of: Matt Lewis, Lower Colorado River Authority, 5, 1; - James Baldwin	
Answer	No
Document Name	
Comment	

This could prove to be challenging and inconsistent. An Entity is required to study facilities owned by other Registered Entities but then what? What if one of the proximity stations is deemed critical from the planning process? Who would be responsible for ensuring that these facilities are adequately protected. What if a facility is low voltage (69kV) and the owner is not registered with NERC; how will this be handled? R2 creates a requirement but does not give any guidance on how to implement.	
Likes 0	
Dislikes 0	
Response	
Thank you for your comment. Please see revised Standard.	
Denise Sanchez - Denise Sanchez On Behalf of: Diana Torres, Imperial Irrigation District, 1, 6, 5, 3; George Kirschner, Imperial Irrigation District, 1, 6, 5, 3; Jesus Sammy Alcaraz, Imperial Irrigation District, 1, 6, 5, 3; Tino Zaragoza, Imperial Irrigation District, 1, 6, 5, 3; - Denise Sanchez	
Answer	No
Document Name	
Comment	
The R2 criteria, as currently written, are open-ended, making consistent evaluation between entities and auditors impossible. Adding an explicit upper bound to limit the scope would enhance clarity and consistency. IID proposes consolidating criteria 2.1.1 through 2.1.3 into a single criterion based on physical distance, as follows: “Multiple Transmission station or Transmission substation yards located within 600 feet between station or substation fences.” Expanding the scope to include physically adjacent facilities regardless of ownership is both costly and redundant. It raises the question of whether both entities will share responsibility for physical security protections.	
Likes 0	
Dislikes 0	
Response	

Thank you for your comment. Please see revised Standard.	
Jesus Sammy Alcaraz - Imperial Irrigation District - 1	
Answer	No
Document Name	
Comment	
The R2 criteria, as currently written, are open-ended, making consistent evaluation between entities and auditors impossible. Adding an explicit upper bound to limit the scope would enhance clarity and consistency. IID proposes consolidating criteria 2.1.1 through 2.1.3 into a single criterion based on physical distance, as follows: “Multiple Transmission station or Transmission substation yards located within 600 feet between station or substation fences.”	
Likes 0	
Dislikes 0	
Response	
Thank you for your comment. Please see revised Standard.	
Selene Willis - Edison International - Southern California Edison Company - 5	
Answer	No
Document Name	
Comment	
See comments submitted by the Edison Eclectic Institute	
Likes 0	
Dislikes 0	
Response	

Thank you for your comments. Please see EEI comment response.	
Ruida Shu - Northeast Power Coordinating Council - 1,2,3,4,5,6,7,8,9,10 - NPCC, Group Name NPCC RSC	
Answer	No
Document Name	
Comment	
We are unsure what the Drafting team meant by “proximity to” in R2 and part 2.1.3. We are unsure what a “common public roadway” is. How is common public roadway different from a public roadway. Additionally, what does “Ease of access” mean for a Common Public roadway?	
Likes 0	
Dislikes 0	
Response	
Thank you for your comment. Please see revised Standard.	
Dwanique Spiller - Berkshire Hathaway - NV Energy - 5	
Answer	No
Document Name	
Comment	
NV Energy supports the EEI response to this question.	
Likes 0	
Dislikes 0	
Response	

Thank you for your comments. Please see EEI comment response.	
Michael Jang - Seattle City Light - 1	
Answer	No
Document Name	
Comment	
Providing support based on SCL SME's opinion: There are no “clear expectations regarding the inclusion of physically adjacent elements,” as the SAR requests. The adjacency criteria leave a lot of room for interpretation and potential conflicts between adjacent owners. The requirements for determining adjacency should be more explicit and, ideally, moved to Attachment 1, since it impacts applicability. The circular references from R2 to R1, R1 to Attachment 1, and Attachment 1 to R2 create room for confusion. We disagree with the inclusion of “ease of access from a common public roadway that exists between multiple Transmission stations” as a reasonable thing to consider. Driving between stations (that don’t already meet line-of-sight or proximity criteria) would take on the order of minutes, whereas protection systems (even with delayed clearing) and transient stability analyses cover things on the order of seconds or less. It is also unclear how shared responsibility will work for adjacent stations with different ownership, especially in the case where one substation is significantly smaller than the other.	
Likes 0	
Dislikes 0	
Response	
Thank you for your comments. Please see SCL comment response.	
Chris Shultz - Seattle City Light - 5	

Answer	No
Document Name	
Comment	

There are no “clear expectations regarding the inclusion of physically adjacent elements,” as the SAR requests. The adjacency criteria leave a lot of room for interpretation and potential conflicts between adjacent owners. The requirements for determining adjacency should be more explicit and, ideally, moved to Attachment 1, since it impacts applicability. The circular references from R2 to R1, R1 to Attachment 1, and Attachment 1 to R2 create room for confusion.

We disagree with the inclusion of “ease of access from a common public roadway that exists between multiple Transmission stations” as a reasonable thing to consider. Driving between stations (that don’t already meet line-of-sight or proximity criteria) would take on the order of minutes, whereas protection systems (even with delayed clearing) and transient stability analyses cover things on the order of seconds or less.

It is also unclear how shared responsibility will work for adjacent stations with different ownership, especially in the case where one substation is significantly smaller than the other.

Likes 0	
Dislikes 0	
Response	

Thank you for your comment. Please see revised Standard.

Carver Powers - Utility Services, Inc. - 4	
Answer	No
Document Name	
Comment	

For requirement 2.1.3, request clarification on what would be considered as a “single event.” Do natural disasters count as a single event (i.e., Hurricane, flood)? The SAR provided an example of what a “single event” could be (e.g., debris field from incendiary device.) Request that this example in the SAR or something similar be included in the modifications. For section 2.1.2, request clarification on “ease of access”, Does a fence, gate, or a speedbump limit the ease of access concern? Recommend providing guidance in either the standard or technical rationale.	
Likes 0	
Dislikes 0	
Response	
Thank you for your comment. Please see revised Standard.	
Stephanie Kenny - Edison International - Southern California Edison Company - 6	
Answer	No
Document Name	
Comment	
See EEI comments	
Likes 0	
Dislikes 0	
Response	
Thank you for your comments. Please see EEI comment response.	
Robert Jones - Seattle City Light - 4	
Answer	No

Document Name	
Comment	
There are no “clear expectations regarding the inclusion of physically adjacent elements,” as the SAR requests. The adjacency criteria leave a lot of room for interpretation and potential conflicts between adjacent owners. The requirements for determining adjacency should be more explicit and, ideally, moved to Attachment 1, since it impacts applicability. The circular references from R2 to R1, R1 to Attachment 1, and Attachment 1 to R2 create room for confusion. We disagree with the inclusion of “ease of access from a common public roadway that exists between multiple Transmission stations” as a reasonable thing to consider. Driving between stations (that don’t already meet line-of-sight or proximity criteria) would take on the order of minutes, whereas protection systems (even with delayed clearing) and transient stability analyses cover things on the order of seconds or less. It is also unclear how shared responsibility will work for adjacent stations with different ownership, especially in the case where one substation is significantly smaller than the other.	
Likes 0	
Dislikes 0	
Response	
Thank you for your comment. Please see revised Standard.	
Daren Brubaker - Seattle City Light - 6	
Answer	No
Document Name	
Comment	
There are no “clear expectations regarding the inclusion of physically adjacent elements,” as the SAR requests. The adjacency criteria leave a lot of room for interpretation and potential conflicts between adjacent owners. The requirements for determining adjacency should be more	

explicit and, ideally, moved to Attachment 1, since it impacts applicability. The circular references from R2 to R1, R1 to Attachment 1, and Attachment 1 to R2 create room for confusion.

We disagree with the inclusion of "ease of access from a common public roadway that exists between multiple Transmission stations" as a reasonable thing to consider. Driving between stations (that don't already meet line-of-sight or proximity criteria) would take on the order of minutes, whereas protection systems (even with delayed clearing) and transient stability analyses cover things on the order of seconds or less.

Likes 0	
Dislikes 0	

Response

Thank you for your comment. Please see revised Standard.

Gail Elliott - Gail Elliott On Behalf of: Michael Moltane, International Transmission Company Holdings Corporation, 1; - Gail Elliott

Answer	No
Document Name	

Comment

Comments: ITC proposes the following modifications:

R2. Each Transmission Owner shall establish and **apply** documented criteria for identifying Transmission station(s) and Transmission substation(s) in proximity to those identified in Requirement R1, that shall be included in the risk assessment.

2.1. The criteria shall include at a minimum one or more of the following: (Convert list to bullets)

-
  - Line-of-sight between multiple Transmission station or Transmission substation yards from a single site.
  - Ease of access from a common public roadway that exists between multiple Transmission station or Transmission substation yards.

○ The Transmission station or Transmission substation yards are in close enough proximity that a single event can impact multiple Transmission stations or Transmission substations ○ Mileage between multiple Transmission station or Transmission substation yards from a single site.	
Likes 0	
Dislikes 0	
Response	
Thank you for your comment. Please see revised Standard.	
Amy Wesselkamper - PNM Resources - Public Service Company of New Mexico - 3	
Answer	No
Document Name	
Comment	
PNM and TNMP support EEI comments regarding R2, noted again here. Additionally, we request the SDT consider removing R2.1.1. Line-of-sight varies significant based on weather conditions, land surfaces, etc. Defining a distance between station would be a better criterion than line-of-sight. *"EEI proposes the following modification:* *R2. Each Transmission Owner shall establish and implement**apply** documented criteria for identifying Transmission station(s) and Transmission substation(s) in proximity to those identified in Requirement R1, irrespective of ownership, that shall be included in the risk assessment."*	
Likes 0	
Dislikes 0	
Response	
Thank you for your comment. Please see revised Standard.	
Zenon O'young-Chu - Seattle City Light - 3	
Answer	No

Document Name	
Comment	
1. There are no “clear expectations regarding the inclusion of physically adjacent elements,” as the SAR requests. The adjacency criteria leave a lot of room for interpretation and potential conflicts between adjacent owners. The requirements for determining adjacency should be more explicit and, ideally, moved to Attachment 1, since it impacts applicability. The circular references from R2 to R1, R1 to Attachment 1, and Attachment 1 to R2 create room for confusion. 2. We disagree with the inclusion of “ease of access from a common public roadway that exists between multiple Transmission stations” as a reasonable thing to consider. Driving between stations (that don’t already meet line-of-sight or proximity criteria) would take on the order of minutes, whereas protection systems (even with delayed clearing) and transient stability analyses cover things on the order of seconds or less. 3. It is also unclear how shared responsibility will work for adjacent stations with different ownership, especially in the case where one substation is significantly smaller than the other.	
Likes 0	
Dislikes 0	
Response	
Thank you for your comment. Please see revised Standard.	
Jason Snodgrass - Jason Snodgrass On Behalf of: Katrina Lyons, Georgia System Operations Corporation, 3, 4; - Jason Snodgrass	
Answer	No
Document Name	
Comment	
GSOC supports comments provided by Georgia Transmission	
Likes 0	
Dislikes 0	
Response	

Thank you for your comments. Please see Georgia Transmission comment response.	
Chris Wagner - Santee Cooper - 1, Group Name Santee Cooper	
Answer	No
Document Name	
Comment	
Requirement 2 should be further clarified since it's intent and what was explained in the webinar don't align. Is the proximity requirement in addition to what was identified in Requirement 1 or is it only stations established in Requirement 1?"	
Likes 0	
Dislikes 0	
Response	
Thank you for your comment. Please see revised Standard.	
Jay Sethi - Manitoba Hydro - 1,3,5,6 - MRO, Group Name Manitoba Hydro Group	
Answer	Yes
Document Name	
Comment	
MH agrees with documenting proximity criteria to identify multiple transmission stations/substations. However, the line-of-sight is subjective to the location and each TO is required to develop its physical proximity criteria based on its unique geographical location and physical threats.	
Likes 0	
Dislikes 0	
Response	

Thank you for your comment. Please see revised Standard.	
Tyler Schwendiman - ReliabilityFirst - 10	
Answer	Yes
Document Name	
Comment	
For R2.2.1.2, the term “ease of access” is not a defined term and may result in difficulty to provide evidence or audit. Suggest using more definitive terms like, “shares access”	
Likes 0	
Dislikes 0	
Response	
Thank you for your comment. Please see revised Standard.	
Mark Garza - FirstEnergy - FirstEnergy Corporation - 4, Group Name FE Voter	
Answer	Yes
Document Name	
Comment	
FirstEnergy has no objection to the modifications made to R2.	
Likes 0	
Dislikes 0	
Response	
Thank you for your comments.	
Daniel Gacek - Exelon - 1, Group Name Exelon	

Answer	Yes
Document Name	
Comment	
Exelon supports the EEI comment to clarify the actions required in R2.	
Likes 0	
Dislikes 0	
Response	
Thank you for your comments. Please see EEI comment response.	

Steven Rueckert - Western Electricity Coordinating Council - 10, Group Name WECC Entity Monitoring	
Answer	Yes
Document Name	
Comment	
Requirement R2.1.1 needs to state “one or more” versus “multiple” unless the adjacency only applies to line-of-site inclusion of two or more Transmission station(s) or Transmission substation(s) from the primary applicable Transmission station/substation. Remove the term “yards” as some Transmission Owners have enclosed Transmission station(s) (e.g., rock/brick walls) where a line-of-sight determination could not be made from within the yard. How does this fit for underground Transmission station(s) or Transmission substation(s)? The term “line-of-sight” is open to a great deal of interpretation here. For “clear line of sight” (no hyphens by the way) used in FAC-003 there is a footnote stating ““Clear line of sight” means the distance that can be seen by the average person without special instrumentation (e.g., binoculars, telescope, spyglasses, etc.) on a clear day.” In the case of CIP-014, the Standard is focused on physical security and the potential adversaries identified in the Requirement R4 threat and vulnerability assessment may very well select locations using weapons/tools that have a “line of sight” from the weapon/tool’s perspective (e.g., range finders, laser targeting tools, etc.). Advanced rifle scopes with ballistic calculators enable precise targeting of critical components from distances exceeding 1 kilometer. Night vision and thermal scopes enhance the ability to engage targets in low-light or no-light conditions, facilitating nighttime operations and reducing the likelihood of immediate detection. If more than one	

Transmission station/substation is within line of sight of the primary applicable Transmission station/substation are all combined as a single loss to study in the risk assessment? This needs to be clear so multiple line-of-sight Transmission station/substation conditions are studied effectively. Requirement R2.1.2 needs to state “one or more” versus “multiple”. Additionally, what is the intent with regards to distance between Transmission station(s)/substation(s) having “ease of access from a common public roadway”? Certainly, potential adversaries identified in the Requirement R4 threat and vulnerability assessment could damage one Transmission station and drive to other Transmission stations sharing the road but is that within a quarter mile or 50 miles? Requirement 2.1.3 Remove “yards”. Using “single event” may limit the perspective of the assessment of risk in terms of multiple sites being attacked by a single adversary or group of adversaries not occurring at the same instant. An entity may not consider a series of attacks over a short timeline as a “single” event which would impact the assessment of the risk. Certainly, there is a fine line to draw but use of the term “single” will be leveraged to limit compliance risk while the operational risk is still in effect (with no mitigation efforts initiated.) Cooperation and coordination between owners with substations in close proximity needs to be emphasized in some manner. Understanding what a neighbor has in the substation and reflecting that in the model is a step to ensure the risk assessment is effective.

Likes 0	
Dislikes 0	
Response	
Thank you for your comment. Please see revised Standard.	
Robert Follini - Avista - Avista Corporation - 3	
Answer	Yes
Document Name	
Comment	
Likes 0	
Dislikes 0	

Response	
Thank you for your support.	
Richard Jackson - U.S. Bureau of Reclamation - 1	
Answer	Yes
Document Name	
Comment	
Likes 0	
Dislikes 0	
Response	
Thank you for your support.	
TRACEY JOHNSON - Southern Indiana Gas and Electric Co. - 3,5,6 - RF	
Answer	Yes
Document Name	
Comment	
Likes 0	
Dislikes 0	
Response	
Thank you for your support.	
Diana Aguas - CenterPoint Energy Houston Electric, LLC - 1 - Texas RE	
Answer	Yes
Document Name	

Comment	
Likes 0	
Dislikes 0	
Response	
Thank you for your support.	
Jennifer Bray - Arizona Electric Power Cooperative, Inc. - 1	
Answer	Yes
Document Name	
Comment	
Likes 0	
Dislikes 0	
Response	
Thank you for your support.	
Andrew Smith - APS - Arizona Public Service Co. - 5	
Answer	Yes
Document Name	
Comment	
Likes 0	
Dislikes 0	
Response	

Thank you for your support.	
Rachel Coyne - Texas Reliability Entity, Inc. - 10	
Answer	Yes
Document Name	
Comment	
Likes 0	
Dislikes 0	
Response	
Thank you for your support.	
Mike Magruder - Avista - Avista Corporation - 1,3,5	
Answer	Yes
Document Name	
Comment	
Likes 0	
Dislikes 0	
Response	
Thank you for your support.	
Jodirah Green - ACES Power Marketing - 1,3,4,5,6 - MRO,WECC,Texas RE,SERC,RF, Group Name ACES Collaborators	
Answer	Yes
Document Name	
Comment	

Likes 0	
Dislikes 0	
Response	
Thank you for your support.	
Devin Shines - PPL - Louisville Gas and Electric Co. - 1,3,5,6 - SERC,RF	
Answer	
Document Name	
Comment	
LG&E and KU suggest the following with regard to what constitutes sufficient “ease of access from a common public roadway": the Drafting Team should consider the inclusion of a hard threshold for exclusion, akin to TPL-001 1-mile threshold for common structures or right-of-way. For example, “R2.2 Transmission stations or Transmission substations more than 1/2-mile from those identified in Requirement R1 may be excluded in the risk assessment.” In this way, entities may still establish criteria to determine when stations are within sufficient proximity, but they are also given a “brightline" option to use if they prefer. Two stations may be separated by 10 miles of common highway. That would seem to be easy access, but also too far apart for a single attack.	
Likes 0	
Dislikes 0	
Response	
Thank you for your comment. Please see revised Standard.	

4. Do you agree with the modifications made in CIP-014-4 with new Requirement R3 to address the issues identified in the SAR?	
Jodirah Green - ACES Power Marketing - 1,3,4,5,6 - MRO,WECC,Texas RE,SERC,RF, Group Name ACES Collaborators	
Answer	No
Document Name	
Comment	
ACES feels R3.1 and it's sub requirements are too prescriptive and extend beyond what is listed in the SAR. The main goal of the SAR is to ensure the inclusion of dynamic studies in the risk assessment and increase clarity around criteria to identify instability, uncontrolled separation or Cascading. The additional requirements extend beyond the scope of the SAR.	
Likes 0	
Dislikes 0	
Response	
Thank you for your comment. Please see revised Standard.	
Chris Wagner - Santee Cooper - 1, Group Name Santee Cooper	
Answer	No
Document Name	
Comment	
SAR did not request a 3-phase bolted fault to be evaluated for a stability analysis. The SAR required clarifying to include transient stability analysis at a minimum, but not specifying the exact type of faults to be analyzed. A bolted 3-phase bolt is a very unlikely event that can occur at a station where every transmission line, transformer and other facilities would experience the fault simultaneously. Potential system impact with bolted 3-phase fault would require costly physical security mitigation for a highly unlikely and low probability event. The standard should leave some flexibility as to what type of fault event should be evaluated and include sufficient technical rationale to support it.	

The SAR did not require all criteria listed in the R3.1 to be used in the identification of instability. Defining a fixed MW value for generation or load loss should not be required if the assessment does not conclude that it would risk instability, uncontrolled separation or Cascading. Obtaining actual clearing times places additional burdens on our System Protection engineers and will also increase the complexity and time necessary to develop scripts for simulating these contingencies with minimal benefit. The operating times we currently employ are reasonable estimations generated after consultation with our System Protection group. They are based on our standard protection schemes and are typically more conservative than the actual operating times.

Likes 0	
Dislikes 0	

Response
Thank you for your comment. Please see revised Standard.

Steven Rueckert - Western Electricity Coordinating Council - 10, Group Name WECC Entity Monitoring	
Answer	No
Document Name	

Comment
There will not be consistency in the development of "acceptable" load/generation loss. Perhaps the RC should determine what that acceptable level is to provide consistency within an RC footprint and/or Interconnection. Appears that there should be a word in front of

"post-event response" to clearly indicate the need for technical rational regarding the post-event response. It is not clear how some bulleted items are "used". Consider consolidating some bulleted items by simply indicating System Operating Limits. The new definition from Project 2015-09 is "All Facility Ratings, System Voltage Limits, and stability limits, applicable to specified System configurations, used in Bulk Electric System operations for monitoring and assessing pre- and post-Contingency operating states." This would remove 1,3,4,5,6, and 12 (specific examples could be covered in the Technical Rational). "Loss of IBR Generation" needs some context in terms of amount. Unclear what "Cascading line tripping" is in this context of evaluating whether Cascading would occur. Is the DT inferring that the Cascading line tripping being evaluated here is in the "predetermined area" as mentioned in the definition of Cascading? Requirement R3 simply says "each Transmission station(s) and Transmission substation identified as applicable". Clarity could be enhanced by stating "…as applicable per Requirements R1 and R4" assuming agreement that Requirement R2 is subsumed by Requirement R1's use of Attachment 1 (bullet 2.1). All the appropriate Transmission stations and Transmission substations should undergo a risk assessment—simply saying applicable may cause registered entities to inadvertently miss R4 (and possibly R2). Why would 3.1.2 not be covered in 3.1's technical rationale? 3.2-Consider using "On-Peak" or "Peak Demand" (defined terms) to describe "System peak" (undefined term). For 3.2.2., consider changing Requirement to say "Applicable Transmission station(s) or Transmission substation(s) that have already been identified as critical to the Interconnection in dynamic or steady state studies do not require any additional studies." What is the designation or intention associated with" critical" here? Are those Transmission station(s) and Transmission substation(s) that cause instability, Cascading, or uncontrolled separation? Or are part of an IROL? This needs to be clearly delineated within this Standard as the term is used in R5. Consider indicating what is critical in Requirement R5 and reference R5 in 3.2.2—"A Transmission station…..identified as critical using criteria in Requirement R5..." Format issue with 3.4 and 3.5 which appear to be sub-bullets of 3.3 which, if changed, affects 3.6 references to 3.4 and 3.5. Should 3.6 say "Protection System" versus "system protection"? Or is the intent "loss of communication for Protection Systems"?

Likes 0	
Dislikes 0	

Response
Thank you for your comment. Please see revised Standard.

Jason Snodgrass - Jason Snodgrass On Behalf of: Katrina Lyons, Georgia System Operations Corporation, 3, 4; - Jason Snodgrass	
Answer	No
Document Name	
Comment	
GSOC supports comments provided by Georgia Transmission	
Likes 0	
Dislikes 0	
Response	
Thank you for your comments. Please see Georgia Transmission comment response.	
Zenon O'young-Chu - Seattle City Light - 3	
Answer	No
Document Name	
Comment	
Item 3.1: The requirement is confusingly phrased. "Post-event response" is not a thing of the same type as "amount of acceptable generation loss" and "amount of acceptable load loss", so it is confusing what kind of technical rationale the requirement is asking for. Also, 3.1.2 seems redundant with this requirement. Item 3.3: Items 3.4, 3.5, and 3.6 seem like they should be sub-requirements to 3.3. Item 3.4: Should exceptions be mentioned for the possible case where a 3-phase fault is not the most severe contingency at the station?	

Item 3.5: As mentioned in my comments on 3, stations being on the same road does not indicate any additional likelihood of simultaneous faults. Even a fraction of a second difference in fault time makes a difference for transient stability.	
Likes 0	
Dislikes 0	
Response	
Thank you for your comment. Please see revised Standard.	
Amy Wesselkamper - PNM Resources - Public Service Company of New Mexico - 3	
Answer	No
Document Name	
Comment	

PNM and TNMP agree, in part, with EEI comments regarding R3, noted again here. However, aligning with TPL-001 R6 is not acceptable. Entities should define the amount of load and generation loss they will allow for CIP-014 analysis. TPL-001 provides some guidance on load and generation loss in Table 1.

"EEI suggests replacing this requirement and its subparts with language similar to Requirement R6 from TPL-001-5 because the objectives are similar. Additionally, the SAR does not require explicit inclusion of load loss or generation loss limits.

o *EEI proposes the following language: "Criteria or methodology used in the analysis to identify System instability for conditions such as Cascading, voltage instability, or uncontrolled islanding."*

o *Some Entities may include explicit thresholds in their Cascading criteria or methodology, but other entities define Cascading as a number of successive element losses. The criteria requirement of TPL-001 is sufficient for evaluating transmission system reliability, and similar language should be used in CIP-014.*

- *R3.1.1 & 3.1.2:*

o *The purpose of CIP-014 is to protect stations where physical attacks may "result in instability, uncontrolled separation, or Cascading within an Interconnection." The items listed under R3.1.1 may or may not be present in such conditions (e.g., the loss of IBR generation does not directly indicate Cascading risk).*

EEI suggests removing 3.1.1, the list of items 3.1.1.1-3.1.1.12, and 3.1.2. This will allow Transmission Owners to define their criteria and methodology. While the list of items provided may add value for consideration, EEI would like to see them moved into the technical rationale for consideration and guidance for Entities during implementation.

Requirement R3, Part 3.2:

- *EEI suggests removing "and other System conditions susceptible to instability, uncontrolled separation, or Cascading with an Interconnection" because it requires entities to study conditions other than peak and off-peak.*

o *Entities may decide to run additional scenarios (e.g., shoulder), but these scenarios should not be included in the requirement language. Additionally, use of the word "any" implies that any System condition that may be susceptible to issues, even if those conditions are sufficiently bounded by the Peak and Off-Peak scenarios are required for analysis, which is overly broad.*

- *R3.2.1: EEI suggests striking "including any tripped facilities from dynamic simulations." Steady-state and dynamic simulations are performed separately and often done by different parties. Some generator tripping in dynamic simulations may not be appropriate for steady-state to evaluate, for example, an IBR that trips in the dynamic simulation may reconnect shortly after the fault clears, even if this reconnection is not represented in stability simulations. However, it would be appropriate to have the generator reconnected in the steady-state simulation. The wording of R3.2.1 is sufficient without this last clause.*

- *EEI also seeks clarity on the use of the phrases "deemed as critical" and "classified as critical" in Requirement R3, Part 3.2.2 and Requirement R5, Parts 5.1 and 5.2. It is not clear that the intended result of the risk assessment performed in Requirement R5 is for the TO to deem Transmission station(s) and Transmission substation(s) as critical or non-critical. EEI suggests the following revision for consideration:*

R3. Each Transmission Owner shall have a documented risk assessment methodology for ***determining if Transmission station(s) and Transmission substation(s) are critical including*** *evaluating the loss of each Transmission station(s) and Transmission substation(s) identified as applicable. The methodology shall include, at a minimum, the following:*

Requirement R3, Part 3.3, 3.4, & 3.5: *- EEI asks the drafting team to revise Requirement R3, Part 3.3 to allow flexibility for the Transmission Owner to determine appropriate and reasonable study scenarios and study assumptions considering the intent of CIP-014-3 and the potential range of issues during a physical attack. We suggest the following modification to Requirement R3, Part 3.3: "Analysis of fault simulations determined to be appropriate and reasonable by the Transmission Owner."* *EEI suggests striking 3.4 & 3.5 and allowing the TO to determine the appropriate study scenarios as described in EEI's proposed revision of Requirement R3, Part 3.3 above. EEI is concerned that the scenarios included in 3.4 & 3.5 have not been justified as appropriate and reasonable as required by the SAR. As an example, there is no historical precedence for a physical attack resulting in a bolted 3-phase fault with loss of all communications as listed in 3.4. Similarly, it is not clear how a physical attack that only impacts one station produces a 3-phase fault, but an event large enough to impact multiple stations produces a single-phase fault. The technical rationale does not include technical justifications for the selection of these scenarios."*	
Likes 0	
Dislikes 0	
Response	
Thank you for your comment. Please see revised Standard.	
Gail Elliott - Gail Elliott On Behalf of: Michael Moltane, International Transmission Company Holdings Corporation, 1; - Gail Elliott	
Answer	No
Document Name	
Comment	
ITC supports the EEI response	
Likes 0	
Dislikes 0	
Response	

Thank you for your comments. Please see EEI comment response.	
Daren Brubaker - Seattle City Light - 6	
Answer	No
Document Name	
Comment	
Item 3.1: The requirement is confusingly phrased. “Post-event response” is not a thing of the same type as “amount of acceptable generation loss” and “amount of acceptable load loss”, so it is confusing what kind of technical rationale the requirement is asking for. Also, 3.1.2 seems redundant with this requirement. Item 3.3: Items 3.4, 3.5, and 3.6 seem like they should be sub-requirements to 3.3. Item 3.4: Should exceptions be mentioned for the possible case where a 3-phase fault is not the most severe contingency at the station? Item 3.5: As mentioned in my comments on 3, stations being on the same road does not indicate any additional likelihood of simultaneous faults. Even a fraction of a second difference in fault time makes a difference for transient stability.	
Likes 0	
Dislikes 0	
Response	
Thank you for your comment. Please see revised Standard.	
Robert Jones - Seattle City Light - 4	
Answer	No
Document Name	
Comment	

Item 3.1: The requirement is confusingly phrased. "Post-event response" is not a thing of the same type as "amount of acceptable generation loss" and "amount of acceptable load loss", so it is confusing what kind of technical rationale the requirement is asking for. Also, 3.1.2 seems redundant with this requirement.

Item 3.3: Items 3.4, 3.5, and 3.6 seem like they should be sub-requirements to 3.3.

Item 3.4: Should exceptions be mentioned for the possible case where a 3-phase fault is not the most severe contingency at the station?

Item 3.5: As mentioned in my comments on 3, stations being on the same road does not indicate any additional likelihood of simultaneous faults. Even a fraction of a second difference in fault time makes a difference for transient stability.

Likes 0	
Dislikes 0	

Response

Thank you for your comment. Please see revised Standard.

Stephanie Kenny - Edison International - Southern California Edison Company - 6

Answer	No
Document Name	

Comment

See EEI comments

Likes 0	
Dislikes 0	

Response

Thank you for your comments. Please see EEI comment response.

Carver Powers - Utility Services, Inc. - 4	
Answer	No
Document Name	
Comment	
Was the intent to have the responsible entity establish their own “acceptable load loss.” In other cases it is up to the BA, RC, or RP to determine a Facility’s acceptable load loss. Requirement 3.3 appears to be missing text and subsections. However, the Technical Rational does include details of this section. Recommend rewording Part 3.6 to provide clarification on “loss of communication and system protection”. Utilizing the NERC defined term of Protection System could limit interpretation of what a loss of system protection entails. We realize that the drating team may intend to include loss of protection system equipment, but not the Protection System as a whole. Rewording to make this clearer could be beneficial. Suggest modifying Part 3.1.1.7 to say “Loss of synchronous generation” rather than “loss of IBR generation” for inclusion of other generation types.	
Likes 0	
Dislikes 0	
Response	
Thank you for your comment. Please see revised Standard.	
Chris Shultz - Seattle City Light - 5	
Answer	No
Document Name	
Comment	

Item 3.1: The requirement is confusingly phrased. “Post-event response” is not a thing of the same type as “amount of acceptable generation loss” and “amount of acceptable load loss”, so it is confusing what kind of technical rationale the requirement is asking for. Also, 3.1.2 seems redundant with this requirement.

Item 3.3: Items 3.4, 3.5, and 3.6 seem like they should be sub-requirements to 3.3.

Item 3.4: Should exceptions be mentioned for the possible case where a 3-phase fault is not the most severe contingency at the station?

Item 3.5: As mentioned in my comments on 3, stations being on the same road does not indicate any additional likelihood of simultaneous faults. Even a fraction of a second difference in fault time makes a difference for transient stability.

Likes 0	
Dislikes 0	

Response

Thank you for your comment. Please see revised Standard.

Michael Jang - Seattle City Light - 1

Answer	No
Document Name	

Comment

Providing support based on SCL SME's opinion:

Item 3.1: The requirement is confusingly phrased. “Post-event response” is not a thing of the same type as “amount of acceptable generation loss” and “amount of acceptable load loss”, so it is confusing what kind of technical rationale the requirement is asking for. Also, 3.1.2 seems redundant with this requirement.

Item 3.3: Items 3.4, 3.5, and 3.6 seem like they should be sub-requirements to 3.3.

Item 3.4: Should exceptions be mentioned for the possible case where a 3-phase fault is not the most severe contingency at the station?

Item 3.5: As mentioned in my comments on 3, stations being on the same road does not indicate any additional likelihood of simultaneous faults. Even a fraction of a second difference in fault time makes a difference for transient stability.	
Likes 0	
Dislikes 0	
Response	
Thank you for your comment. Please see revised Standard.	
Dwanique Spiller - Berkshire Hathaway - NV Energy - 5	
Answer	No
Document Name	
Comment	
NV Energy supports the EEI response to this question.	
Likes 0	
Dislikes 0	
Response	
Thank you for your comments. Please see EEI comment response.	
Mike Magruder - Avista - Avista Corporation - 1,3,5	
Answer	No
Document Name	
Comment	

R3 is poorly written but meets the intent of addressing issues identified in the SAR. The requirement as written mixes methodology concepts with criteria for evaluation. Sub-requirement R3.3 does not clearly state how a “fault simulation” is applicable to either dynamic and/or steady state simulations.

Likes 0	
Dislikes 0	

Response

Thank you for your comment. Please see revised Standard.

Ruida Shu - Northeast Power Coordinating Council - 1,2,3,4,5,6,7,8,9,10 - NPCC, Group Name NPCC RSC

Answer	No
Document Name	

Comment

We are unsure of what “acceptable loss” means in 3.1. Is this a technical term or defined by the entity on a case-by-case basis.

We propose changing “susceptible” to “vulnerable” in Part 3.2.

We noticed that 3.3 seems to be missing text and subsections. The Technical Rational had a section on 3.3.

In Part 3.6 why is “system protection” used instead of the NERC glossary defined term of “Protection System”?

R3.1.1.4 “Relay Loadability” is already factored into R3.1.1.3 “Thermal Loading of Facilities” and should be removed due its duplicative nature.

R3.1.1.7 – This should state “Loss of generation” since loss of synchronous generation as well as IBR generation would both cause concerns.

R3.3 Appears to be missing and does not line up with the information provided in the technical rationale.

Likes 0	
Dislikes 0	
Response	
Thank you for your comment. Please see revised Standard.	
Selene Willis - Edison International - Southern California Edison Company - 5	
Answer	No
Document Name	
Comment	
See comments submitted by the Edison Eclectic Institute	
Likes 0	
Dislikes 0	
Response	
Thank you for your comments. Please see EEI comment response.	
Jesus Sammy Alcaraz - Imperial Irrigation District - 1	
Answer	No
Document Name	
Comment	
IID recommends numbering be fixed for section 3.3. Technical Rationale refers to section 3.3.1, however there is no 3.3.1 in redlines to approved. Furthermore, IID is unsure if R3 is referring to steady state transient or short circuit.	
Likes 0	

Dislikes 0	
Response	
Thank you for your comment. Please see revised Standard.	
Denise Sanchez - Denise Sanchez On Behalf of: Diana Torres, Imperial Irrigation District, 1, 6, 5, 3; George Kirschner, Imperial Irrigation District, 1, 6, 5, 3; Jesus Sammy Alcaraz, Imperial Irrigation District, 1, 6, 5, 3; Tino Zaragoza, Imperial Irrigation District, 1, 6, 5, 3; - Denise Sanchez	
Answer	No
Document Name	
Comment	
IID recommends numbering be fixed for section 3.3. Technical Rationale refers to section 3.3.1, however there is no 3.3.1 in redlines to approved. Furthermore, IID is unsure if R3 is referring to steady state transient or short circuit.	
Likes 0	
Dislikes 0	
Response	
Thank you for your comment. Please see revised Standard.	
James Baldwin - James Baldwin On Behalf of: Matt Lewis, Lower Colorado River Authority, 5, 1; - James Baldwin	
Answer	No
Document Name	
Comment	
The list of study requirements is very prescriptive and severe. Compliance risk rises substantially when a standard becomes overly prescriptive and demanding. That risk is compounded by the increase in the number of stations identified in R1 and R2. There is a formatting issue with 3.4 and 3.5.	

Likes 0	
Dislikes 0	
Response	
Thank you for your comment.	
Stephen Stafford - Stephen Stafford On Behalf of: Greg Davis, Georgia Transmission Corporation, 1; - Stephen Stafford	
Answer	No
Document Name	
Comment	

- Per the NERC Functional Model, the Transmission Owner (TO) is defined as "the entity that owns and maintains transmission Facilities." R3 is addressing analysis criteria and assumptions that are beyond the purview and capabilities of the TO and is not consistent with the TO expectations set forth in the referenced NERC Functional model. This includes determining the amount of acceptable load loss, the amount of generation loss, and the evaluation of instability, uncontrolled separation, and Cascading within the Interconnection.
- R3 is misplaced in this CIP standard and should be addressed via a separate project in the TPL space. This project should include SMEs from the planning functions so the appropriate expertise informs potential requirements.
- It is understood that the current version of CIP-014 addresses aspects of the analysis. This construct is problematic as currently written and applied to the TO function.
- Regarding 3.1.1.5: There is no apparent value added by evaluating post-contingency voltage deviation. Steady-state, post-contingency voltage is a problem if the voltage is outside of System Voltage Limits. The post-contingency voltage problem is not dependent on the pre-contingency voltage level nor the deviation from such level.
- Regarding 3.1.1.7 Loss of IBR generation should be changed to “Loss of generation.” The amount of generation loss and its impact on the ability of the BES to remain stable and serve load is the concern and is not specific to IBR.
- R3.3 - R3.6 prescribe the analysis of fault simulations. However, the purpose of the standard is to identify and protect transmission stations and transmission substations (and the BPS) from the results of a physical attack. As such, we need to first understand the types of physical attacks we are simulating. (i.e. What type of physical attack would result in a bolted 3-phase fault at only the highest voltage level bus at one station (and potentially another, simultaneously, in proximity per R2), and what type of attack would result in simultaneous single-phase faults at the highest voltage level buses of stations in the close proximity to each other? What does physical security at a particular station do to mitigate the issue?

- Regarding R3.2.2: GTC recommends insertion the word "current" immediately preceding "dynamic or steady state." A transmission station or Transmission substation that is already identified as critical to the Interconnection in **current** dynamic or steady state studies does not require any additional studies during the assessment.
- Regarding 3.6: The requirement for fault simulations to assume all loss of communication and system protection at the Transmission station or Transmission substation should be based on the type of attack being simulated. What type of attack would result in loss of all communication and system protection at the Transmission station or Transmission substation? What does physical security at a particular station do to mitigate the issue?

Likes 0	
Dislikes 0	

Response

Thank you for your comment. Please see revised Standard.

Kristine Martz - Edison Electric Institute - NA - Not Applicable - NA - Not Applicable

Answer	No
Document Name	

Comment

EEI is generally concerned with the addition of prescriptive requirement language that is not wholly supported by the scope of the SAR. It is important to provide flexibility for various approaches to the risk assessment due to expected differences in each registered entity's facts and circumstances while supporting the intent of CIP-014. EEI proposes the following edits for consideration:

Requirement R3, Part 3.1:

- EEI suggests replacing this requirement and its subparts with language similar to Requirement R6 from TPL-001-5 because the objectives are similar. Additionally, the SAR does not require explicit inclusion of load loss or generation loss limits.

o EEI proposes the following language: "Criteria or methodology used in the analysis to identify System instability for conditions such as Cascading, voltage instability, or uncontrolled islanding."

o Some Entities may include explicit thresholds in their Cascading criteria or methodology, but other entities define Cascading as a number of successive element losses. The criteria requirement of TPL-001 is sufficient for evaluating transmission system reliability, and similar language should be used in CIP-014.

- R3.1.1 & 3.1.2:

o The purpose of CIP-014 is to protect stations where physical attacks may "result in instability, uncontrolled separation, or Cascading within an Interconnection." The items listed under R3.1.1 may or may not be present in such conditions (e.g., the loss of IBR generation does not directly indicate Cascading risk).

§ EEI suggests removing 3.1.1, the list of items 3.1.1.1-3.1.1.12, and 3.1.2. This will allow Transmission Owners to define their criteria and methodology. While the list of items provided may add value for consideration, EEI would like to see them moved into the technical rationale for consideration and guidance for Entities during implementation.

Requirement R3, Part 3.2:

- EEI suggests removing "and other System conditions susceptible to instability, uncontrolled separation, or Cascading with an Interconnection" because it requires entities to study conditions other than peak and off-peak.

o Entities may decide to run additional scenarios (e.g., shoulder), but these scenarios should not be included in the requirement language. Additionally, use of the word "any" implies that any System condition that may be susceptible to issues, even if those conditions are sufficiently bounded by the Peak and Off-Peak scenarios are required for analysis, which is overly broad.

- R3.2.1: EEI suggests striking "including any tripped facilities from dynamic simulations." Steady-state and dynamic simulations are performed separately and often done by different parties. Some generator tripping in dynamic simulations may not be appropriate for steady-state to evaluate, for example, an IBR that trips in the dynamic simulation may reconnect shortly after the fault clears, even if this reconnection is not represented in stability simulations. However, it would be appropriate to have the generator reconnected in the steady-state simulation. The wording of R3.2.1 is sufficient without this last clause.

- EEI also seeks clarity on the use of the phrases “deemed as critical” and “classified as critical” in Requirement R3, Part 3.2.2 and Requirement R5, Parts 5.1 and 5.2. It is not clear that the intended result of the risk assessment performed in Requirement R5 is for the TO to deem Transmission station(s) and Transmission substation(s) as critical or non-critical. EEI suggests the following revision for consideration: R3. Each Transmission Owner shall have a documented risk assessment methodology for **determining if Transmission station(s) and Transmission substation(s) are critical including** evaluating the loss of each Transmission station(s) and Transmission substation(s) identified as applicable. The methodology shall include, at a minimum, the following: Requirement R3, Part 3.3, 3.4, & 3.5: - EEI asks the drafting team to revise Requirement R3, Part 3.3 to allow flexibility for the Transmission Owner to determine appropriate and reasonable study scenarios and study assumptions considering the intent of CIP-014-3 and the potential range of issues during a physical attack. We suggest the following modification to Requirement R3, Part 3.3: **“**Analysis of fault simulations determined to be appropriate and reasonable by the Transmission Owner.” - EEI suggests striking 3.4 & 3.5 and allowing the TO to determine the appropriate study scenarios as described in EEI’s proposed revision of Requirement R3, Part 3.3 above. EEI is concerned that the scenarios included in 3.4 & 3.5 have not been justified as appropriate and reasonable as required by the SAR. As an example, there is no historical precedence for a physical attack resulting in a bolted 3-phase fault with loss of all communications as listed in 3.4. Similarly, it is not clear how a physical attack that only impacts one station produces a 3-phase fault, but an event large enough to impact multiple stations produces a single-phase fault. The technical rationale does not include technical justifications for the selection of these scenarios.	
Likes 0	
Dislikes 0	
Response	
Thank you for your comment. Please see revised Standard.	
David Jendras Sr - Ameren - Ameren Services - 3	
Answer	No
Document Name	
Comment	

Ameren supports EEI's comments on this project.	
Likes 0	
Dislikes 0	
Response	
Thank you for your comments. Please see EEI comment response.	
Hillary Creurer - Allete - Minnesota Power, Inc. - 1	
Answer	No
Document Name	
Comment	
Minnesota Power supports MRO-NSRF and EEI's comments.	
Likes 0	
Dislikes 0	
Response	
Thank you for your comments. Please see EEI comment response.	
Andy Fuhrman - Andy Fuhrman On Behalf of: Theresa Allard, Minnkota Power Cooperative Inc., 1; - Andy Fuhrman	
Answer	No
Document Name	
Comment	

MPC concurs with the comments of ACES and the MRO NSRF.	
Likes 0	
Dislikes 0	
Response	
Thank you for your comments. Please see MRO NSRF and ACES comment responses.	
Fon Hiew - NB Power Corporation - New Brunswick Power Transmission Corporation - 5	
Answer	No
Document Name	
Comment	
We are unsure of what “acceptable loss” means in 3.1. Is this a technical term or defined by the entity on a case-by-case basis. We propose changing “susceptible” to “vulnerable” in Part 3.2. We noticed that 3.3 seems to be missing text and subsections. The Technical Rational had a section on 3.3. In Part 3.6 why is “system protection” used instead of the NERC glossary defined term of “Protection System”? R3.1.1.4 “Relay Loadability” is already factored into R3.1.1.3 “Thermal Loading of Facilities” and should be removed due its duplicative nature. R3.1.1.7 – This should state “Loss of generation” since loss of synchronous generation as well as IBR generation would both cause concerns. R3.3 Appears to be missing and does not line up with the information provided in the technical rationale.	
Likes 0	
Dislikes 0	

Response	
Thank you for your comment. Please see revised Standard.	
Chantal Mazza - Chantal Mazza On Behalf of: Junji Yamaguchi, Hydro-Quebec (HQ), 1, 5; Nicolas Turcotte, Hydro-Quebec (HQ), 1, 5; - Chantal Mazza	
Answer	No
Document Name	
Comment	
We are unsure of what “acceptable loss” means in 3.1. Is this a technical term or defined by the entity on a case-by-case basis.We propose changing “susceptible” to “vulnerable” in Part 3.2. We noticed that 3.3 seems to be missing text and subsections. The Technical Rational had a section on 3.3. In Part 3.6 why is “system protection” used instead of the NERC glossary defined term of “Protection System”? R3.1.1.4 “Relay Loadability” is already factored into R3.1.1.3 “Thermal Loading of Facilities” and should be removed due its duplicative nature. R3.1.1.7 – This should state “Loss of generation” since loss of synchronous generation as well as IBR generation would both cause concerns. R3.3 Appears to be missing and does not line up with the information provided in the technical rationale.	
Likes 0	
Dislikes 0	
Response	
Thank you for your comment. Please see revised Standard.	
Mark Flanary - Midwest Reliability Organization - 10	
Answer	No
Document Name	

Comment
Parts 3.4, 3.5, and 3.6 appear to be sub-parts of 3.3 and should be be labeled 3.3.1, 3.3.2, and 3.3.3, respectively. R3.1: The phrase "post-event response" in this context reduces clarity of the Requirement. The Requirment should clearly set expectations that the criteria for instability, uncontrolled separation, or Cascading within an Interconnection need to be addressed in the risk assessment methodology. Consider removing the phrase "post-event response" to clarify the objective of the technical rationale. R3.2: The Requirement as written identifies some System conditions for analysis, but is silent on time horizon which can lead to inconsistencies in model usage. Consider clarifying what model year(s) to use (e.g., one year out; two year out; five year out; etc.) or providing a framework for determining model year(s) to use. R3.5: The rationale for using “single-phase faults at the highest voltage level buses of each of the Transmission station(s) or Transmission substation(s)” for substations that are identified in accordance with Requirement R2 is assuming the best case scenario and results in a weaker study outcome. Consider combining with R3.4 while making R3.4 more general addressing single or multiple (sub)stations to produce a more robust study.

Likes 0	
Dislikes 0	

Response
Thank you for your comment. Please see revised Standard.

Jeffrey Streifling - NB Power Corporation - 1	
Answer	No
Document Name	

Comment
We are unsure of what “acceptable loss” means in 3.1. Is this a technical term or defined by the entity on a case-by-case basis.

We propose changing “susceptible” to “vulnerable” in Part 3.2. We noticed that 3.3 seems to be missing text and subsections. The Technical Rational had a section on 3.3. In Part 3.6 why is “system protection” used instead of the NERC glossary defined term of “Protection System”? R3.1.1.4 “Relay Loadability” is already factored into R3.1.1.3 “Thermal Loading of Facilities” and should be removed due its duplicative nature. R3.1.1.7 – This should state “Loss of generation” since loss of synchronous generation as well as IBR generation would both cause concerns. R3.3 Appears to be missing and does not line up with the information provided in the technical rationale.	
Likes 0	
Dislikes 0	
Response	
Thank you for your comment. Please see revised Standard.	
Dave Krueger - SERC Reliability Corporation - 10	
Answer	No
Document Name	
Comment	
Thank you for the chance to comment, SERC appreciates the complexity of the SDT’s task of modifying multiple parts of such a high profile and high-priority standard. Item #3.A R3.1.2 states that the R3 documented risk methodology should contain ‘Technically supported thresholds for acceptable load loss and acceptable generation loss”. Given that no NERC Responsible Entity with applicability to CIP-014-3 comprises the entirety of an Interconnection, the allowance for each individual TO to derive thresholds for what is acceptable at an Interconnection level seems dubious, and likely invites compliance scrutiny. Determining such a threshold may also be beyond the capability of some of the smaller TOs who do not have as wide a view of the planning process. Having consistent implementation of criteria is mentioned in SAR Project Scope Item #3:	

"*Assure the adequacy and consistent implementation of technically supported justification for study decisions. Clarity should include specificity regarding the documentation, and usage of criteria to identify instability, uncontrolled separation, or Cascading within an Interconnection occur as part of a risk assessment.*" Having this criterion be up to individual interpretation would appear not to fully address that. Suggest instead the use of a common and published criteria, such as NERC's annual Frequency Response Annual Analysis, to provide a consistent reference point for all entities to utilize, at least by default as a compliance "floor". If it was desirable to add flexibility to utilize a more conservative reference point (e.g. a lower threshold of lost Generation MWs for a specific ISO), that could be something defined that in that TO's R3 methodology or a common methodology used by all TO members of an RTO/ISO.	
Likes 0	
Dislikes 0	
Response	
Thank you for your comment. Please see revised Standard.	
Teresa Krabe - Lower Colorado River Authority - 5	
Answer	No
Document Name	
Comment	
The list of study requirements is very prescriptive and severe. Compliance risk rises substantially when a standard becomes overly prescriptive and demanding. That risk is compounded by the increase in the number of stations identified in R1 and R2. There is a formatting issue with 3.4 and 3.5.	
Likes 0	
Dislikes 0	
Response	
Thank you for your comment. Please see revised Standard.	

Israel Perez - Israel Perez On Behalf of: Laura Somak, Salt River Project, 3, 6, 5, 1; Mathew Weber, Salt River Project, 3, 6, 5, 1; Thomas Johnson, Salt River Project, 3, 6, 5, 1; Timothy Singh, Salt River Project, 3, 6, 5, 1; - Israel Perez	
Answer	No
Document Name	
Comment	
SRP supports the MRO NSRF with Tacoma Power's comments.	
Likes 0	
Dislikes 0	
Response	
Thank you for your comments. Please see MRO NSRF comment response.	
Andrew Smith - APS - Arizona Public Service Co. - 5	
Answer	No
Document Name	
Comment	
AZPS agrees with EEI's comments regarding R3.4 & 3.5. The current draft does not provide rationale to support or justify the prescribed fault simulation parameters. For 3.1.1.7., AZPS does not understand the specific inclusion of IBR generation. This bullet should be removed or justified.	
Likes 0	
Dislikes 0	
Response	

Thank you for your comments. Please see EEI comment response.	
Joshua London - Eversource Energy - 1, Group Name Eversource	
Answer	No
Document Name	
Comment	
Eversource believes R3.1.1.4 “Relay Loadability” is already factored into R3.1.1.3 “Thermal Loading of Facilities” and should be removed due its duplicative nature. R3.1.1.7 – This should state “Loss of generation” since loss of synchronous generation as well as IBR generation would both cause concerns. R3.3 Appears to be missing and does not line up with the information provided in the technical rationale.	
Likes 0	
Dislikes 0	
Response	
Thank you for your comment. Please see revised Standard.	
Sean Bodkin - Dominion - Dominion Resources, Inc. - 6, Group Name Dominion	
Answer	No
Document Name	
Comment	
Dominion Energy supports EEI comments.	
Likes 0	
Dislikes 0	

Response
Thank you for your comments. Please see EEI comment response.

Ellese Murphy - Duke Energy - 1,3,5,6 - Texas RE,SERC,RF	
Answer	No
Document Name	

Comment

Duke Energy does not agree with the risk assessment language proposed in R3 and does not support the proposed fault simulation language. Simulating a bolted 3-phase fault is not a valid study assumption because it simulates a highly implausible scenario. The drafting team has not demonstrated that this scenario can be created with a physical attack which physical protection can mitigate. This simulation implies a "crater" scenario, but the issue is that even a true crater scenario would be unlikely to cause this type of fault as typically simulated by software platforms such as PSSE. Duke Energy also support EEI concerns on the issue of the bolted 3-phase fault.

For 3.1.1. Duke Energy suggests adding parameters at the end of the parent statement to read "Load loss, generation loss, and post-event response within an Interconnection shall be evaluated, using at a minimum the following **parameters**". We believe that the list under 3.1.1 is not adequately justified and should be revaluated only to include parameters for evaluation that are directly related to instability, uncontrolled separation, or cascading within an interconnection.

Duke Energy has concern that 3.2 is overly broad in reference to "other system conditions susceptible to instability", given that all conditions are susceptible to instability and this language could require an excess of system conditions to be analyzed. We support EEI comments on this issue.

The numbering/layout of R3 needs to be revised as R3.4 and R3.5 appear to be sub-requirements of R3.3. Correcting this will also impact how R3.6 is written.

Lastly, Duke Energy requests that the drafting team clarify the use of the word “critical” in the revisions. We infer that critical is meant to represent the sites that have already have been identified as sites that require physical protection under previous CIP-014 analysis, but whether or not this is the intended use is not clear in the present draft.	
Likes 0	
Dislikes 0	
Response	
Thank you for your comment. Please see revised Standard.	
Rachel Schuldt - Black Hills Corporation - 6, Group Name Black Hills Corporation - All Segments	
Answer	No
Document Name	
Comment	
Black Hills Corporation agrees with EEI comments that Requirement R3, Part 3.1 be replaced with language similar to Requirement R6 from TPL-001-5 as the objectives are similar, and the sub-requirements of R3.1.1, and R3.1.2 be struck from the requirement. Black Hills Corporation recommends language that would use the same criteria or methodology used in the analysis for System instability conditions within TPL-001-5 studies or studies under FAC-014-3, should be used for CIP-014-3 as it would align with regional requirements or requirements set forth by the Reliability Coordinator. Black Hills Corporation agrees with remaining EEI comments for the rest of the subsections of Requirement R3.	
Likes 0	
Dislikes 0	
Response	
Thank you for your comment. Please see revised Standard.	

Thank you for your comments. Please see EEI comment response.	
Donna Wood - Tri-State G and T Association, Inc. - 1	
Answer	No
Document Name	
Comment	
Tri-State agrees with the MRO NSRF Submitted Comments	
Likes 0	
Dislikes 0	
Response	
Thank you for your comments. Please see MRO NSRF comment response.	
Richard Vendetti - NextEra Energy - 5	
Answer	No
Document Name	
Comment	
NEE support's EEI comments: " EEI proposes the following edits for consideration: Requirement R3, Part 3.1: {C}- EEI suggests replacing this requirement and its subparts with language similar to Requirement R6 from TPL-001-5 because the objectives are similar. Additionally, the SAR does not require explicit inclusion of load loss or generation loss limits.	

{C}o EEI proposes the following language: “Criteria or methodology used in the analysis to identify System instability for conditions such as Cascading, voltage instability, or uncontrolled islanding.”

{C}o Some Entities may include explicit thresholds in their Cascading criteria or methodology, but other entities define Cascading as a number of successive element losses. The criteria requirement of TPL-001 is sufficient for evaluating transmission system reliability, and similar language should be used in CIP-014.

{C}- R3.1.1 & 3.1.2:

{C}o The purpose of CIP-014 is to protect stations where physical attacks may “result in instability, uncontrolled separation, or Cascading within an Interconnection.” The items listed under R3.1.1 may or may not be present in such conditions (e.g., the loss of IBR generation does not directly indicate Cascading risk).

{C}§ EEI suggests removing 3.1.1, the list of items 3.1.1.1-3.1.1.12, and 3.1.2. This will allow Transmission Owners to define their criteria and methodology. While the list of items provided may add value for consideration, EEI would like to see them moved into the technical rationale for consideration and guidance for Entities during implementation.

Requirement R3, Part 3.2:

{C}- EEI suggests removing “and other System conditions susceptible to instability, uncontrolled separation, or Cascading with an Interconnection” because it requires entities to study conditions other than peak and off-peak.

{C}o Entities may decide to run additional scenarios (e.g., shoulder), but these scenarios should not be included in the requirement language. Additionally, use of the word “any” implies that any System condition that may be susceptible to issues, even if those conditions are sufficiently bounded by the Peak and Off-Peak scenarios are required for analysis, which is overly broad.

{C}- R3.2.1: EEI suggests striking “including any tripped facilities from dynamic simulations.” Steady-state and dynamic simulations are performed separately and often done by different parties. Some generator tripping in dynamic simulations may not be appropriate for steady-state to evaluate, for example, an IBR that trips in the dynamic simulation may reconnect shortly after the fault clears, even if this

reconnection is not represented in stability simulations. However, it would be appropriate to have the generator reconnected in the steady-state simulation. The wording of R3.2.1 is sufficient without this last clause.

{C}- EEI also seeks clarity on the use of the phrases “deemed as critical” and “classified as critical” in Requirement R3, Part 3.2.2 and Requirement R5, Parts 5.1 and 5.2. It is not clear that the intended result of the risk assessment performed in Requirement R5 is for the TO to deem Transmission station(s) and Transmission substation(s) as critical or non-critical. EEI suggests the following revision for consideration:

R3. Each Transmission Owner shall have a documented risk assessment methodology for **determining if Transmission station(s) and Transmission substation(s) are critical including** evaluating the loss of each Transmission station(s) and Transmission substation(s) identified as applicable. The methodology shall include, at a minimum, the following:

Requirement R3, Part 3.3, 3.4, & 3.5:

{C}- EEI asks the drafting team to revise Requirement R3, Part 3.3 to allow flexibility for the Transmission Owner to determine appropriate and reasonable study scenarios and study assumptions considering the intent of CIP-014-3 and the potential range of issues during a physical attack. We suggest the following modification to Requirement R3, Part 3.3: **“**Analysis of fault simulations determined to be appropriate and reasonable by the Transmission Owner.”

{C}- EEI suggests striking 3.4 & 3.5 and allowing the TO to determine the appropriate study scenarios as described in EEI’s proposed revision of Requirement R3, Part 3.3 above. EEI is concerned that the scenarios included in 3.4 & 3.5 have not been justified as appropriate and reasonable as required by the SAR. As an example, there is no historical precedence for a physical attack resulting in a bolted 3-phase fault with loss of all communications as listed in 3.4. Similarly, it is not clear how a physical attack that only impacts one station produces a 3-phase fault, but an event large enough to impact multiple stations produces a single-phase fault. The technical rationale does not include technical justifications for the selection of these scenarios. “

Likes 0	
Dislikes 0	

Response

Thank you for your comments. Please see EEI comment response.

Jennifer Bray - Arizona Electric Power Cooperative, Inc. - 1	
Answer	No
Document Name	
Comment	

AEPC signed on to ACES comments below:

ACES feels R3.1 and it's sub requirements are too prescriptive and extend beyond what is listed in the SAR. The main goal of the SAR is to ensure the inclusion of dynamic studies in the risk assessment and increase clarity around criteria to identify instability, uncontrolled separation or Cascading. The additional requirements extend beyond the scope of the SAR.

Likes 0	
Dislikes 0	
Response	

Thank you for your comments. Please see ACES comment response.

Diana Aguas - CenterPoint Energy Houston Electric, LLC - 1 - Texas RE	
Answer	No
Document Name	
Comment	

CenterPoint Energy Houston Electric, LLC (CEHE) recommends removing risk assessment methodology part R3.1.1.1. thru R3.1.1.12 as they are not necessary and too prescriptive. Transmission Owners should establish the methodology and what is to be evaluated. Therefore, these details do not need to be included as part of the CIP-014-4 Standard.

CEHE is capable of providing the study details associated with Requirement 3.6; however, this is adding additional compliance burden on Entities, similar to the challenges identified in TPL-001-5. The study would only be required every 36-calendar months, but Entities do not

have a method of automating that process. It would be a manual study review for every substation identified, which would be incredibly intrusive and burdensome.	
Likes 0	
Dislikes 0	
Response	
Thank you for your comment. Please see revised Standard.	
Michael Dillard - Austin Energy - 5, Group Name Austin Energy	
Answer	No
Document Name	
Comment	
Austin Energy supports MRO's comments. Attached in Question 1.	
Likes 0	
Dislikes 0	
Response	
Thank you for your comments. Please see MRO NSRF comment response.	
TRACEY JOHNSON - Southern Indiana Gas and Electric Co. - 3,5,6 - RF	
Answer	No
Document Name	
Comment	

Southern Indiana Gas and Electric d/b/a CenterPoint Energy Indiana South (SIGE) agrees with removing risk assessment methodology part R3.1.1.1. thru R3.1.1.12 as they are not necessary and too prescriptive. Transmission Owners should establish the methodology and what is to be evaluated. Therefore, these details do not need to be included as part of the CIP-014-4 Standard.	
Likes 0	
Dislikes 0	
Response	
Thank you for your comment. Please see revised Standard.	
Ben Hammer - Western Area Power Administration - 1	
Answer	No
Document Name	
Comment	
WAPA concurs with the comments provided by the MRO NSRF. In addition, WAPA also offers that Requirement 3.2 uses the terminology, "and other System conditions…" which creates a situation where an entity may have to "prove the negative" if an auditor feels that "other System conditions" studied by the entity are not sufficient, even if the prescriptive studies mentioned in 3.2 were performed. Recommend stating what is the minimum requirement and avoid the catch-all, ambiguous phrasing. Requirement R3.4 and R3.5. It is possible that a fault on a lower voltage level bus at a substation is more severe than the highest voltage level bus, so this is an odd way to make this an explicit requirement. For R3.6, recommend the use of generic, conservative clearing times (or slowest possible), vice actual clearing times which would alleviate a burden for entities with large number of substations to evaluate while still meeting the objective. With R3.3 stating "as follows," R3.4, 3.5, etc should be sub-requirements under R3.3	
Likes 0	
Dislikes 0	

Response	
Thank you for your comment. Please see revised Standard.	
Karen Demos - NextEra Energy - Florida Power and Light Co. - 3	
Answer	No
Document Name	
Comment	
NextEra/FPL supports EEI's comments	
Likes 0	
Dislikes 0	
Response	
Thank you for your comments. Please see EEI comment response.	
Cain Braveheart - Bonneville Power Administration - 1,3,5,6 - WECC	
Answer	No
Document Name	
Comment	
Sub-Requirement 3.6 assumes loss of communication and system protection regardless if the analysis assumes removal of a singular Transmission station or Transmission substation (R3.4), or if the analysis assumes removal of more than one Transmission station or Transmission substation (R3.5). BPA believes a reasonable threat removing a single substation could be severe enough to remove an entire substation and include loss of communication and protection systems, whereas a threat to more than one substation at the same time would more reasonably be targeted at high voltage equipment and not necessarily result in loss of communications or relaying. BPA recommends that Requirement 3.6 only apply to a singular substation analyzed in Requirement 3.4.	

BPA recommends sub-requirements 3.4, 3.5, and 3.6 be re-numbered to 3.3.1, 3.3.2, and 3.3.3.	
Likes 0	
Dislikes 0	
Response	
Thank you for your comment. Please see revised Standard.	
Leshel Hutchings - AEP - 3	
Answer	No
Document Name	
Comment	

Comments: **R3 Section 3.1:**

Reword "*Technical rationale for determining the amount of acceptable load loss, the amount of acceptable generation loss, and post-event response resulting in instability, uncontrolled separation, or Cascading within an Interconnection.*"

To proposed language: "*Technical rationale for determining instability, uncontrolled separation, or Cascading with a critical impact to the operation of an Interconnection.*"

This simplifies confusing language. Move the specific language around "amount of acceptable load loss and the amount of acceptable generation loss" to the 3.1.1 criteria. Add "critical impact to the operation of the Interconnection" language directly from the FERC clarification of the March 7 Order to make explicit the purpose of the risk assessment.

R3 Section 3.1.1:

Suggest removing all of the sub bullets under 3.1.1.

3.1.1 is too prescriptive and the list appears to be a random selection of factors that may or may not influence instability, uncontrolled separation, or Cascading. They would not in themselves generally be taken as constituting measures of instability, uncontrolled separation, or

Cascading. Instability, uncontrolled separation, or Cascading already define the three factors to consider. The Standard is not designed nor intended to prescribe the methodology for entities. We support R3 requiring TOs to have a documented risk assessment methodology.

The technical rationale for Part 3.1.1 states that "a TO can decide that one or more of the items are not applicable to their location within the interconnection", but if the items are written explicitly in the standard, particularly with language stating "at a minimum", there will be no flexibility given around considering them all.

3.1.1 and 3.1.2 are duplicative. One should be removed – suggest consolidating to "*Technically supported thresholds for acceptable load loss and generation loss".*

Alternatively, they could be split into two separate bullets: *"3.1.1: load loss, 3.1.2: generation loss".* "Post-event response" does not add clarity and instability, uncontrolled separation, or Cascading covers this.

R3 Section 3.2:

Propose rewording "Analysis at System Peak, Off-Peak Load, and other System conditions,"

To proposed: "Analysis at System Peak, Off-Peak Load, or other System conditions," or completely removing this section, otherwise this will triple the number of scenarios/cases for entities.

This will triple the number of scenarios. Additionally, "other System conditions" is left undefined.

One of the reasons for changing the compliance timeframe to 36 months was to be consistent with the case building process. Some RTOs like ERCOT provide limited dynamic cases, so this language means it would not be possible to use the RTO cases unless each TO modifies cases to meet the requirements especially "other system conditions susceptible to instability".

Some entities previously considered sensitivities based on differing future years with projects in or out of service and received positive observations in audits for this approach. The language in the current draft unfortunately would eliminate the potential for that interpretation.

R3 Section 3.2.1:

The placement of 3.2.1 does not make sense here under 3.2. Suggest making its own bullet 3.7.

3.2.1 will lead to significant nonconvergence issues in steady state if applied in the contingency or even if a base case is created with these outages because the appropriate timing delay cannot be reflected. If outages are applied individually and manually post-contingency this will be a significant increase in the burden of the steady state analysis.

R3 Section 3.2.2:

The placement of 3.2.2 does not make sense here under 3.2. Suggest making its own bullet 3.8. Duplicative with 5.1 – suggest removing 5.1 or at least one of them.

R3 Section 3.3:

Sections 3.4, 3.5, and 3.6 should be sub-bullets to section 3.3, and therefore renumbered to 3.3.1, 3.3.2, and 3.3.3 (3.6.1 would become 3.3.3.1).

Consolidate 3.4 and 3.5 propose 3 phase bolted faults for all events as worst case "smoking crater" scenario.

This reduces complexity of considering different events for one applicable station outages or multiple proximate station outages.

R3 Section 3.6.2 :

Remove 3.6.2.

What value does having this bullet explicitly in the standard add? It will add significant additional compliance burden for evidence to mitigate minor risk and minor result impact.

It should be noted that the risk assessment is performed on future planning cases, and many factors could impact the actual clearing times prior to the dates that the cases represent. Some facilities in the risk assessment will be future/planned stations and without actual clearing times available.

Likes 0	
Dislikes 0	

Response
Thank you for your comment. Please see revised Standard.
Alan Kloster - Alan Kloster On Behalf of: Jeremy Harris, Evergy, 3, 5, 1, 6; Kevin Frick, Evergy, 3, 5, 1, 6; Marcus Moor, Evergy, 3, 5, 1, 6; Tiffany Lake, Evergy, 3, 5, 1, 6; - Alan Kloster

Answer	No
Document Name	

Comment
Evergy supports and incorporates by reference the comments of the Edison Electric Insitute (EEI) and MRO NSRF for question #4.

Likes 0	
Dislikes 0	

Response
Thank you for your comments. Please see MRO NSRF and EEI comment responses.
Brian Millard - Tennessee Valley Authority - 1,3,5,6 - SERC, Group Name TVA RBB

Answer	No
Document Name	

Comment
TVA does not agree with the modifications made in CIP-014-4 with the new Requirement R3. Regarding R3.4, only one threat level is specified when there are no additional substations included due to proximity. “If the Transmission station(s) or Transmission substation(s) identified in accordance with Requirement R1 is a singular Transmission station or Transmission substation, then fault simulations shall include a bolted 3-phase fault at the highest voltage level bus.”

If only one threat level is suggested to be studied for these events, then it removes the need for an independent verifier. If the event specificity remains, TVA suggests removing the independent verifier requirement.

However, the study parameters of only one threat level for these events is unreasonable and not technically supported by any physical attack risk study that includes the probability of such an attack. If such a study were performed, TVA is confident that a study of one threat level would be shown to be unrealistic. The proposed event is generally considered to be even more severe than a "smoking hole" event. The consequence of having such an unreasonable and overly conservative threat level is the potential for a significant number of additional substations being identified as critical. Protective DCB relaying would not be able to mitigate this type of event as it is written. Since this type of threat cannot typically be mitigated by grid enhancements, a huge expense would be directed to building fences instead of potential improvements to grid reliability. The resulting fences or walls around multiple substations would only draw more attention to those who wish to attack the system. There are ways to still attack the substations, even with the fences, and the result would be a situation with less grid security coupled with a huge unproductive expense.

TVA proposes an approach to consider historical events:

The first step of the methodology would be to do a thorough study of all historical events to identify a series of unique threat vectors. A potential list of identified threat vectors based on historical events might look like:

1) Large transformer banks under gunfire from gunman, firing 100 to 150 rounds of rifle ammunition

2) Total loss of communication prior to event

3) Attacks cut the underground telecommunication fiber optic cables but did not fully disrupt the telemetry between the PG&E substation and the control center.

4) No faults caused by the attack.

4b) Single phase faults caused by the attack.

5) Were fires in the control building or elsewhere in the switchyard? (Y/N)

6) Was power lost in the switchyard? (Y/N)

The second step of the methodology would be to define events to study. Each event would combine several different threat vectors, but NOT at the same time (unless historically verified to happen).

Two Examples of realistic events to study (events that are worse than all historical events, but are not the combination of all possible threats):

1) Study the loss of all power at the substation combined with the loss of all communications at the substation combined with a single phase to ground fault at the highest voltage level (or at all voltage levels). No local breakers operate so that the single phase-phase fault must be cleared remotely from each of the remote substations.

2) Study a 3-phase fault event with the loss of all power at the substation but with communications at the substation still functioning. No local breakers operate so that the 3-phase fault must be cleared remotely from each of the remote substations.

If the CIP-014 methodology included the study of event scenarios like these, then all the attack vectors could be included in the study in a reasonable way. The study events could be designed to be worse than any single historical physical attack scenario that has ever occurred. An overly conservative methodology (that is not based on realistic probabilities) would be a significant time burden to the industry. Expense and grid security potentially would be even worse as a result.

Regarding 3.2.1, adding tripped generators and other tripped facilities from the dynamic stability study to the steady-state contingency definition would create overly conservative results and be excessively burdensome. Often stability studies need to be rerun during the checking process. Any reruns may cause the steady state studies to also be redone. Historically, both studies have been done in parallel and not sequentially. Steady-state studies typically assume constant power loads where power does not vary with changes in voltage magnitude. This is a valid assumption for steady state studies but in reality, loads do not behave this way and differs greatly from how loads are represented in dynamic studies.

From a dynamic studies perspective, the composite load model (CMLD) has seen increased adoption among utilities and more accurately reflects the aggregate behavior of motors. The model includes parameters which dictate fractions of the motor load components that do not restart, even if voltage recovers above the undervoltage trip thresholds. There is currently no industry consensus on whether this fraction of non-restartable motor loss is consequential or non-consequential load loss. TVA's position is that this is consequential load loss, as it's impossible to prevent, would occur for normally cleared faults due to typical undervoltage time delays of 2-3 cycles. Consequential load loss is commonly excluded from steady-state load loss criteria.

To be consistent, there are aspects of the dynamics studies that would also need to be included in the steady state studies to properly align the studies that cannot be readily captured or communicated, such as the amount of load that trips offline (consequentially by the load

model). These are quantities that are internal to the simulation that are often unavailable using the apps supplied by PSSE. The complexity of the resulting combined study would be very burdensome and impractical to manage. Therefore, including tripped generators and other tripped facilities from the stability study into the steady-state study could only make sense if loads were also reduced by the fraction of loss. This would be a time burden to the industry as there is currently no practical way to achieve this with the tools available to Transmission Planners. TVA suggest to remove the “including any tripped facilities from dynamic simulations” language.	
Likes 0	
Dislikes 0	
Response	
Thank you for your comment. Please see revised Standard.	
Anna Martinson - MRO - 1,2,3,4,5,6 - MRO, Group Name MRO Group	
Answer	No
Document Name	
Comment	
The subparts of R3.1 are very prescriptive and go significantly beyond the requirements listed in the SAR. One of the primary goals of the SAR was to ensure the inclusion of dynamic studies in the risk assessment and increase clarity around criteria to identify instability, uncontrolled separation or Cascading. The draft goes significantly beyond this, requiring prescriptive technical considerations using criteria not mentioned anywhere in the SAR. In addition, the drafted R3.6 requires the loss of communication and system protection and the station(s) or substation(s) being studied. Entities have multiple means of communications between relays to clear faults, including powerline carrier, microwave and fiber. Faults are typically cleared in 3-5 cycles (.05-.083 seconds). Gunfire cannot cause this complete outage of all communications before the relays can save the system. For the Metcalf attack many years ago that prompted CIP-014, an attacker entered a communications vault outside the substation and cut communications cables. It is very unlikely an attacker can cut the redundant communication circuits used by relays to communicate between substations or within a substation. The SAR only asks for clarification around the use of delayed clearing in study assumptions, and does not mandate its inclusion as its own sub-requirement.	

The MRO NSRF recommends that R3 eliminate the prescriptive sub-parts in 3.1, instead requiring the entity to document its criteria, parameters, and study decisions or assumptions in a study methodology, which must include dynamic and steady-state studies. R3 should also include the consideration of physical proximity criteria within the entity's methodology as outlined in Q4. In addition, the MRO NSRF recommends the removal of R3.6. R3 should include only the minimum specifications listed in the SAR. Finally, the MRO NSRF recommends that entities design their CIP-014 risk assessment methodology with the focus on realistic and likely threat scenarios. Administratively, given the colon at the end of R3.3, R3.4 thru 3.6 should be numbered 3.3.1 thru 3.3.3. And then, 3.6.1 should be 3.3.3.1 and 3.6.2 be 3.3.3.2.	
Likes 1	Lincoln Electric System, 1, Johnson Josh
Dislikes 0	
Response	
Thank you for your comment. Please see revised Standard.	
Michele Shafer - New York State Electric & Gas (NYSEG) - 6	
Answer	No
Document Name	
Comment	

- R3 should specify what applicable stations that should be covered in the methodology. Suggest that CIP-014-4 R3 be worded to state: "…loss of each Transmission station(s) **and/**or Transmission substation(s) identified as applicable **in the list established in R1, the criteria developed in R2, and/or the individual or joint responsibilities identified in R4**."
- The wording in R3.1 states that the "…methodology shall include, at a minimum, the following:" which supposes that each area has limits for all of the items listed in R3.1, R3.1.1, and R3.1.2. For example, if an area does not have a limit for loss of load they could be found as non-compliant. Suggest that this be worded to state:
  "…methodology shall **consider**, at a minimum, the following. If one of the following criteria is not utilized in the methodology a technical rationale must be documented."
- In R3.1 I suggest that the wording in the second line be updated to the following "…and **acceptable** post-event **system** response **that results in** instability, uncontrolled separation or Cascading…" to identify what response is being evaluated, and that the intent of the

evaluation is to determine an acceptable level of performance.

- In R3.1.1 the use of the phrase "…shall be evaluated…" will compel an entity to evaluate each of the listed items, even though it may not be something that is limiting in that area. Suggest that this section be reworded:
  "3.1.1. Load loss, generation loss, and post-event **system** response within an Interconnection shall **be considered and documented technical rationale, for** at a minimum the following:"
- In R3.1.2 the phrase "Technically supported…" can be read in different ways. Suggest rewording:
  "**Thresholds for** acceptable load loss and acceptable generation loss **with documented technical rationale**."
- When discussing generator and load loss does the standard allow for entities to define limits as gross OR net loss as they see fit? R3.1.2 lists them separately and it is not clear if they can be assessed simultaneously, if desired.

- The use of the language "…and other System conditions…" could compel an entity to create additional scenarios on top of peak and off-peak that may not be impactful in order to comply with the standard. Suggest this be reworded to the following:
  "…Off-Peak Load, and other **optional** System Conditions…"
- R3.2.1 states that "Steady state analysis shall include the removal of all elements that Protection Systems…are expected to automatically disconnect…" but no such specificity is included for dynamic studies that are briefly mentioned at the end of R3.2.1. The TPL-001-5 standard does include such specificity in its R3.3.1 (steady state) and R4.3.1 (dynamics).

- The TPL-001 standard uses the term "stability" whereas the updated CIP-014 uses the term "dynamic"; is there an intended differentiation?
- Is R3.2.2 intended to allow for a station to never be retested in future assessments if it has ever been identified as critical in a previous CIP-014 assessment, or is this requirement intended to permit an entity to not perform both analyses (steady-state and dynamic) if a station is found to be critical in one analysis in the current assessment? Having an entity operating under the assumption that once a station is critical it will always be critical could lead to inefficient response during an event.
- Should R3.4, R3.5, and R3.6 be moved under R3.3 as R3.3.1, R3.3.2, and R3.3.4? In addition, in the existing R3.4 the phrasing is not clear and can potentially be misinterpreted to read that if there was a single substation identified on the R1 list that the testing should be done with a 3LG fault. Suggest that it be reworded:
  "**Fault simulations on** Transmission station(s) or Transmission substation(s) identified in accordance with Requirement R1 **that do not include additional proximal facilities** shall include a bolted 3-phase fault at the highest voltage level bus."

- In R3.5 the standard uses the term “If…” when referencing stations identified in R2; but I believe that the intent of R2 is to create groups of proximal stations, so there will always be 2 stations included under the analysis in R3.5 so “If” should be removed.

- R1 refers to creating a list of stations using Attachment 1 of which Criterion 2.1 can identify multiple facilities. However, R3.4, references singular stations and R3.5 refers to the stations added through R2. When read together it is not clear the fault type that should be utilized when testing stations that are identified in Attachment 1 Criterion 2.1. I believe that the testing should include testing of proximal stations individually if they are meeting applicability, and then another simulation that includes testing simultaneous loss of the applicable station and proximal sites.
- In R3.6 the term “…system protection…” is used and not “…protection systems…” as is written in R3.2.1. Is the wording change between R3.2.1 and R3.6 intentional? If so, what is the difference intended to communicate?
- In R3.6.1 the use of the wording “Delayed (remote)…” is not clear. This could be interpreted identify remote clearing that is further delayed by some phenomena, or to only allow for testing through delayed elements and not an overreaching low time delay pilot scheme like a blocking scheme. Suggest that the wording be changed so that it requires entities to assess it based on the clearing times that would be in effect if all protection system at the station(s) under test were disabled.

Likes 0	
Dislikes 0	

Response

Thank you for your comment. Please see revised Standard.

Michele Tondalo - United Illuminating Co. - 1

Answer	No
Document Name	

Comment

Comment 9: R3 should specify what applicable stations that should be covered in the methodology. Suggest that CIP-014-4 R3 be worded to state:

“…loss of each Transmission station(s) and/or Transmission substation(s) identified as applicable in the list established in R1, the criteria developed in R2, and/or the individual or joint responsibilities identified in R4.”

Comment 10: The wording in R3.1 states that the "…methodology shall include, at a minimum, the following:" which supposes that each area has limits for all of the items listed in R3.1, R3.1.1, and R3.1.2. For example, if an area does not have a limit for loss of load they could be found as non-compliant. Suggest that this be worded to state:

"…methodology shall consider, at a minimum, the following. If one of the following criteria is not utilized in the methodology a technical rationale must be documented."

Comment 11: In R3.1 I suggest that the wording in the second line be updated to the following "…and acceptable post-event system response that results in instability, uncontrolled separation or Cascading…" to identify what response is being evaluated, and that the intent of the evaluation is to determine an acceptable level of performance.

Comment 12: In R3.1.1 the use of the phrase "…shall be evaluated…" will compel an entity to evaluate each of the listed items, even though it may not be something that is limiting in that area. Suggest that this section be reworded:

"3.1.1. Load loss, generation loss, and post-event system response within an Interconnection shall be considered and documented technical rationale, for at a minimum the following:"

Comment 13: In R3.1.2 the phrase "Technically supported…" can be read in different ways. Suggest rewording:

"*Thresholds for acceptable load loss and acceptable generation loss with documented technical rationale.*"

Comment 14: When discussing generator and load loss does the standard allow for entities to define limits as gross OR net loss as they see fit? R3.1.2 lists them separately and it is not clear if they can be assessed simultaneously, if desired.

Comment 15: The use of the language "…and other System conditions…" could compel an entity to create additional scenarios on top of peak and off-peak that may not be impactful in order to comply with the standard. Suggest this be reworded to the following:

"…Off-Peak Load, and other optional System Conditions…"

Comment 16: R3.2.1 states that "Steady state analysis shall include the removal of all elements that Protection Systems…are expected to automatically disconnect…" but no such specificity is included for dynamic studies that are briefly mentioned at the end of R3.2.1. The TPL-001-5 standard does include such specificity in its R3.3.1 (steady state) and R4.3.1 (dynamics).

Comment 17: The TPL-001 standard uses the term “stability” whereas the updated CIP-014 uses the term “dynamic”; is there an intended differentiation?

Comment 18: Is R3.2.2 intended to allow for a station to never be retested in future assessments if it has ever been identified as critical in a previous CIP-014 assessment, or is this requirement intended to permit an entity to not perform both analyses (steady-state and dynamic) if a station is found to be critical in one analysis in the current assessment? Having an entity operating under the assumption that once a station is critical it will always be critical could lead to inefficient response during an event.

Comment 19: Should R3.4, R3.5, and R3.6 be moved under R3.3 as R3.3.1, R3.3.2, and R3.3.4? In addition, in the existing R3.4 the phrasing is not clear and can potentially be misinterpreted to read that if there was a single substation identified on the R1 list that the testing should be done with a 3LG fault. Suggest that it be reworded:

“Fault simulations on Transmission station(s) or Transmission substation(s) identified in accordance with Requirement R1 that do not include additional proximal facilities shall include a bolted 3-phase fault at the highest voltage level bus.”

Comment 20: In R3.5 the standard uses the term “If…” when referencing stations identified in R2; but I believe that the intent of R2 is to create groups of proximal stations, so there will always be 2 stations included under the analysis in R3.5 so “If” should be removed.

Comment 21: R1 refers to creating a list of stations using Attachment 1 of which Criterion 2.1 can identify multiple facilities. However, R3.4, references singular stations and R3.5 refers to the stations added through R2. When read together it is not clear the fault type that should be utilized when testing stations that are identified in Attachment 1 Criterion 2.1. I believe that the testing should include testing of proximal stations individually if they are meeting applicability, and then another simulation that includes testing simultaneous loss of the applicable station and proximal sites.

Comment 22: In R3.6 the term “…system protection…” is used and not “…protection systems…” as is written in R3.2.1. Is the wording change between R3.2.1 and R3.6 intentional? If so, what is the difference intended to communicate?

Comment 23: In R3.6.1 the use of the wording “Delayed (remote)…” is not clear. This could be interpreted identify remote clearing that is further delayed by some phenomena, or to only allow for testing through delayed elements and not an overreaching low time delay pilot scheme like a blocking scheme. Suggest that the wording be changed so that it requires entities to assess it based on the clearing times that would be in effect if all protection system at the station(s) under test were disabled.

Likes 0	

Dislikes 0	
Response	
Thank you for your comment. Please see revised Standard.	
Mark Garza - FirstEnergy - FirstEnergy Corporation - 4, Group Name FE Voter	
Answer	No
Document Name	
Comment	

The draft standard seems to have three scenarios where a station or stations would need to be studied:
1. An individual station meeting the applicability requirements of Attachment 1 (R1 & Attachment 1, part 2).

2. Multiple stations that individually are not applicable but are applicable when combined (R1 & Attachment 1, part 2.1).

3. Multiple stations with one station that is individually applicable based on R1 and additional stations in close proximity to the first (R2).

Scenario 1 would be tested with a three-phase fault per Part 3.4.
Scenario 3 would be tested with a single-line-to-ground fault per Part 3.5.
However, how should Scenario 2 be tested? Since scenario 2 would be identified by R1, Part 3.4 would apply. But Part 3.4 indicates that it only applies to a singular station (emphasis added).

For faults applied in Requirement R3, Parts 3.4 and 3.5, with actual clearing times used, should the standard address how to handle faults that are not fully cleared or do not outage the entire station?

For example, if a three-phase fault is applied per part 3.4, it could be possible that the relaying of remote breakers on some or all of the lower voltage lines may not be able to see the fault on the highest voltage bus through the transformation, leaving a permanent fault on the system. Should the standard discuss propagation of an uncleared fault to lower voltage level(s)? For example, for a similar type of study,

NPCC Document A-10, Section 3.5, Step 1b and Technical Rationale 4 discusses the process of propagating uncleared faults through transformers. In another example, if a single substation (with all equipment within a single fenced enclosure) has multiple voltage levels that are not connected by transformation, with a three-phase fault applied as per part 3.4, the highest voltage facilities would likely be fully cleared by remote lines, but the lower voltage bus(es) would likely remain energized by some or all source lines. Should faults with stations with multiple, separated voltage levels be simulated like adjacent station as per Part 3.5?	
Likes 0	
Dislikes 0	
Response	
Thank you for your comment. Please see revised Standard.	
Tyler Schwendiman - ReliabilityFirst - 10	
Answer	No
Document Name	
Comment	
For 3.1.1, while the listed categories are a good starting point, the list will lead to confusion for both development of the required methodology and audit of that methodology. Some of the categories presented could be applicable to steady-state analysis, dynamic analysis, or both. It is suggested to reference a table rather than list these categories randomly. For 3.1.1.4, another consideration is that some of the categories overlap or have a relationship with one another (e.g., 'Relay loadability' is a typical factor that contributes to 'Thermal loading of facilities'). It might be better suited to identify the need to consider relay loadability when determining thermal loading or tripping thresholds of transmission elements). For 3.1.1.7, suggest the removal of 'Loss of IBR generation' since this is already required from the verbiage in 3.1 (i.e., "the amount of	

acceptable generation loss”). This category could lead to misinterpretation of the requirement to include a more detailed analysis using electromagnetic transient analysis, which is presently not feasibly from a wide-area perspective. For 3.1.1.11, More clarity is required around this category. Cascading line tripping can be interpreted differently depending on the background and capability of the person performing the analysis and the data available. To some, cascade is a steady-state analysis based on thermal loading above some prescribed level (i.e., 125% of the applicable summer emergency rating). This is in alignment with the idea that the event takes place over a 5-15 min time interval, where conductors are given time to heat up and subsequently trip taking into account the thermal time constants associated with conductors and line ratings. An alternative perspective is immediate cascade tripping for loading outside of a zone 3 relaying scheme, or some type of other protective relaying mechanism tripping the line. This level of relay modeling is not typical in the industry, but more of a best practice. It would be difficult to audit this consistently if this is not a standard practice/capability. For 3.2, the verbiage, “other System conditions” is ambiguous and should be restated to “at the minimum, one stress scenario”. The stress scenario should also be clearly defined in the required methodology. In addition, 3.2 does not provide any guidance on the year of study (e.g., one year out, two, five, etc.). For 3.2.1, the stipulation, “including any tripped facilities from dynamic simulations”, seems more like it should be a best practice rather than a requirement. Taking 3.2.1 as written, simulating a substation outage, plus multiple elements that were identified as tripping in dynamic analysis has a higher likelihood of causing a non-convergent solution in steady-state analysis. More clarification is required here in the language to ensure the intent of the requirement is met. For 3.5, what is the rationale here? If the intent is to simulate a “smoking hole” in 3.4, then the likelihood of debris from the initial attack would result in a single-phase fault at an adjacent substation. It would make more sense to apply a three-phase fault to the first substation, then a single-phase fault to the second.

Likes 0	
Dislikes 0	

Response
Thank you for your comment. Please see revised Standard.

Lucinda Bradshaw - Oncor Electric Delivery - 1 - Texas RE	
Answer	No
Document Name	

Comment
Oncor disagrees with the modifications in new R3 for the following reasons: • Thermal overload by itself is not an essential criterion for determining station criticality assuming relay loadability is not exceeded. Oncor suggests removal of thermal loading as a criterion. Thermal loading should be monitored to determine if relay loadability is exceeded. • "Loss of IBR generation" needs to be clarified as to whether the phrase is referring to consequential or non-consequential generation loss. Additionally, positive-sequence simulations poorly represent actual frequency variations. Frequency calculations can lead to large, unrealistic spikes during faults that may lead to false IBR tripping. • Frequency exceeding generator limits. As mentioned above, IBR generator tripping could be a result of poor IBR modeling and/or inaccurate frequency calculations in positive-sequence simulations. • The requirements for the Steady-state volage stability analysis need to be clarified. • R3.1 and R3.1.2 need to be revised so that the differences between the two sub-requirements are clear. • The applicable system conditions mentioned in R3.2 need to be defined. Specifically for other system conditions susceptible to instability. • R3.6.1 and R3.6.2 need to be revised so that the differences between the two sub-requirements are clear.

Likes 0	
Dislikes 0	

Response
Thank you for your comment. Please see revised Standard.

Kelley Sargent - Puget Sound Energy, Inc. - 3	
Answer	No
Document Name	

Comment
It may be difficult for a utility to define interconnection level thresholds for acceptable load loss and acceptable generation loss (under R3.1.2), which may be better understood and specified by a regional planning authority. It will be helpful if the standard defines the

thresholds for acceptable load/generation loss (under R3.1.2), that will differentiate smaller level local impact (non-critical) from an interconnection level widespread impact (critical).	
Likes 0	
Dislikes 0	
Response	
Thank you for your comment. Please see revised Standard.	
Lidija Efremova - Lidija Efremova On Behalf of: Emma Halilovic, Hydro One Networks, Inc., 1; - Lidija Efremova	
Answer	No
Document Name	
Comment	
While dynamic studies may be suitable to determine the criticality of a bus/station, the methodology described in R3 is too onerous on such a standard. CIP-014 is its own standard and should not require repetition of the dynamic studies under the scope of other standards. Performing base case preparation and performance criteria etc. are not suitable for physical security standard. System criticality is already being identified in other NERC standards/requirements. RC's have accountability and oversight into system criticality and the various types of dynamic studies being listed under R3. (It is not within the accountability of the TO's in many jurisdictions). In addition, the *technical rationale document* implies that it's up to the TO to determine which studies are applicable which makes interpretation of the standard confusing. Much of the criteria proposed in R3 are not under the purview or overnight of an individual TO.	
Likes 0	
Dislikes 0	
Response	

The SDT asserts they have met the directives outlined in the SAR with respect to the items mentioned in this comment Response for TO function.	
Jay Sethi - Manitoba Hydro - 1,3,5,6 - MRO, Group Name Manitoba Hydro Group	
Answer	No
Document Name	
Comment	
MH believes that R3.1 is too prescriptive and goes beyond what is expected in the SAR. It is recommended to either remove these details or move them to an attachment as technical guidance. The drafting team didn't mention the use of the under-frequency and/or under-voltage load shed relays, which are important for determining load loss. MH also suggests making the format change where R3.4-R3.6 should be R3.3.1-R3.3.3.	
Likes 0	
Dislikes 0	
Response	
Thank you for your comment. Please see revised Standard.	
Rebika Yitna - Rebika Yitna On Behalf of: Roger Brand, MEAG Power, 3, 1; - Rebika Yitna	
Answer	No
Document Name	
Comment	
R3 as written is too prescriptive, goes beyond the requirements of the SAR, and limits the flexibility of entities to define and carry out their own risk-based risk assessment methodology based on the unique characteristics of their system(s).	
Likes 0	
Dislikes 0	

Response
Thank you for your comment. Please see revised Standard.
Jennie Wike - Jennie Wike On Behalf of: John Merrell, Tacoma Public Utilities (Tacoma, WA), 1, 4, 5, 6, 3; - Jennie Wike, Group Name Tacoma Power

Answer	No
Document Name	

Comment

Tacoma Power supports the MRO NSRF comments, as follows.

The subparts of R3.1 are very prescriptive and go significantly beyond the requirements listed in the SAR. One of the primary goals of the SAR was to ensure the inclusion of dynamic studies in the risk assessment and increase clarity around criteria to identify instability, uncontrolled separation or Cascading. The draft goes significantly beyond this, requiring prescriptive technical considerations using criteria not mentioned anywhere in the SAR.

In addition, the drafted R3.6 requires the loss of communication and system protection and the station(s) or substation(s) being studied. Entities have multiple means of communications between relays to clear faults, including powerline carrier, microwave and fiber. Faults are typically cleared in 3-5 cycles (.05-.083 seconds). Gunfire cannot cause this complete outage of all communications before the relays can save the system. For the Metcalf attack many years ago that prompted CIP-014, an attacker entered a communications vault outside the substation and cut communications cables. It is very unlikely an attacker can cut the redundant communication circuits used by relays to communicate between substations or within a substation. The SAR only asks for clarification around the use of delayed clearing in study assumptions, and does not mandate its inclusion as its own sub-requirement.

The MRO NSRF recommends that R3 eliminate the prescriptive sub-parts in 3.1, instead requiring the entity to document its criteria, parameters, and study decisions or assumptions in a study methodology, which must include dynamic and steady-state studies. R3 should also include the consideration of physical proximity criteria within the entity's methodology as outlined in Q4. In addition, the MRO NSRF recommends the removal of R3.6. R3 should include only the minimum specifications listed in the SAR.

Finally, the MRO NSRF recommends that entities design their CIP-014 risk assessment methodology with the focus on realistic and likely threat scenarios.

Administratively, given the colon at the end of R3.3, R3.4 thru 3.6 should be numbered 3.3.1 thru 3.3.3. And then, 3.6.1 should be 3.3.3.1 and 3.6.2 be 3.3.3.2.	
Likes 0	
Dislikes 0	
Response	
Thank you for your comments. Please see MRO NSRF comment response.	
Kevin Conway - Western Power Pool - 4	
Answer	No
Document Name	
Comment	
R3 is essentially a fill-in-the-blank requirement that may have a list of “check-box” topics. Entities will only strive to meet the minimum expectations of the stated requirement, since going above and beyond will only expose them to more risk. These types of requirements also cause auditors to audit quality, not objective performance. This will be enforced as a zero defect standard, because the entity will miss a “check-box” item, or the auditor will not agree that the entity addressed the subject to their personal satisfaction. Ideally the list should include how much load loss and expected performance metrics that all entities must meet.	
Likes 0	
Dislikes 0	
Response	
Thank you for your comment. Please see revised Standard.	
Matt Carden - Southern Company - Southern Company Services, Inc. - 1	
Answer	No

Document Name	Attachment 1.docx

Comment

Southern Company agrees with the need for detailed requirements for fault simulations provided in Requirement R3.3, but there is need for some additional clarification or modification of R3.4 and R3.5 based on the assumptions detailed in R3.6.

As written, an unintended consequence of R3.4 would be ambiguity in how to simulate events for transmission stations or transmission substations with multiple voltages. For example, in Figure 1 below, R3.4 would require the placement of a bolted 3-phase fault at the 500kV bus. A clarification is needed in R3.6 on if the loss of communication and protection needs to be assumed for just the highest voltage level bus (i.e. 500kV bus in this exmample) of the transmission subsation(s). If the intent is to cover all voltage levels, the 115kV System in this example would rely on breakers at remote stations H, I, and J to clear the fault (based on assumptions outlined in R3.6). Additional assumptions of the simulated event not provided in Requirement R3 would need to be made since those stations may or may not clear for the initial fault at the 500kV bus of study. This could lead to inconsistency in analysis.

See Attachment 1 for figure 1.

Additionally, the fault simulations could vary greatly between a singular substation with multiple voltages and multiple substations with multiple voltages for the same event. In Figure 2, R3.5 would require simulation of simultaneous single line to ground faults at the 500kV and 115kV buses for a nearly identical event as Figure 1 (assuming physical proximity of the two events is also similar).

See attachment 1 for figure 2.

Southern Company recommends simplifying the simulations required to include faults at all voltage level buses of the applicable transmission station(s) or substation(s). This would provide clarity for what should be simulated and avoid excessively complex simulations for the assessment.

Southern Company recommends removing “and other System conditions” from Requirement R3.2. The inclusion of other System conditions could lead to varying interpretations and expectations regarding the assessment requirements.

Likes 0	

Dislikes 0	
Response	
Attachment didn't come through. Thank you for your comment. Please see revised Standard.	
James Keele - Entergy - 3	
Answer	No
Document Name	
Comment	

part that gives me concern, is some of the specific language proposed in R3 (see below) that could change the way we are doing the assessment and cause impacts to the potential changes or even increase the current list. Item 3.6 is probably most concerning to me and want to make sure we are effectively reviewing that info with the SME's and providing comments back to the drafting team if it has negative consequences for us.

3.2.1.Steady state analysis shall include the removal of all elements that Protection Systems and other controls are expected to automatically disconnect for each event, including any tripped facilities from dynamic simulations.

3.2.1. Adding tripped generators from the dynamic stability study to the steady-state contingency definition would create overly conservative results. Historically, both studies have been done in parallel and not directly informed each other.

Steady-state studies typically assume constant power loads where power does not vary with changes in voltage magnitude. This is a valid assumption for steady state studies but in reality, loads do not behave this way and differs greatly from how loads are represented in dynamic studies.

For dynamic studies the composite load model (CMLD) has seen increased adoption among utilities and more accurately reflects the aggregate behavior of motors. The model includes parameters which dictate fractions of the motor load components that do not restart, even if voltage recovers above the undervoltage trip thresholds. There is currently no industry consensus on whether this fraction of non-restart able motor loss is consequential or non-consequential load loss. Entergy's stance is that this is consequential load loss as it's impossible to

prevent and would occur even for normally cleared faults due to typical undervoltage time delays of 2-3 cycles. Consequential load loss is commonly excluded from steady-state load loss criteria.

In summary, reflecting tripped generators from the stability study to the steady-state study would only make sense if loads were also reduced by the fraction of non-restart able motor loss. This would be extremely tedious as there is currently no practical way to achieve this with the tools available to Transmission Planners. There may be other issues that may need to be considered. Removal of the "including any tripped facilities from dynamic simulations" language should be considered.

3.6. Fault simulations shall assume the loss of communication and system protection at the Transmission station(s) or Transmission substation(s) studied under Requirement R3, Parts 3.4 and 3.5.

3.6.1. Delayed (remote) clearing times shall be used unless otherwise technically substantiated.

3.6.2. Actual clearing times shall be used unless otherwise technically substantiated.

3.6 Existing language may lead to multiple interpretations at stations with multiple control houses. Although the standard doesn't specifically mention control houses, a total loss of communication and system protection would likely be the result of control house being damaged/destroyed.

{C}· One interpretation could be that the loss of a single control house satisfies the considering the "loss of communication and system protection at the Transmission station(s) or Transmission substation(s) requirement" language. The existence of a second control house would then be used as the technical basis [3.6.1.] as to why you wouldn't have delayed clearing on some elements.

{C}· Another interpretation could be to assume the loss of all communication and system protection which means all the control houses at the Transmission station(s) or Transmission substation(s) are destroyed.

Likes 0	
Dislikes 0	

Response

Thank you for your comment. Please see revised Standard.

Robert Follini - Avista - Avista Corporation - 3

Answer	No
Document Name	
Comment	
R3 is poorly written but meets the intent of addressing issues identified in the SAR. The requirement as written mixes methodology concepts with criteria for evaluation. Sub-requirement R3.3 does not clearly state how a “fault simulation” is applicable to either dynamic and/or steady state simulations.	
Likes 0	
Dislikes 0	
Response	
Thank you for your comment. Please see revised Standard.	
Jessica Cordero - Unisource - Tucson Electric Power Co. - 1	
Answer	No
Document Name	
Comment	
Need clarification on R3.1.1.8 “Frequency exceeding generator limits”. R3.2.2: implies once a site is deemed critical, it remains critical. There needs to be a process to remove stations from critical list if in future assessments it is deemed non-critical. As written, R3.4, R3.5, and R3.6 should be sub requirements of R3.3.	
Likes 0	
Dislikes 0	
Response	
Thank you for your comment. Please see revised Standard.	
Alison Nickells - NiSource - Northern Indiana Public Service Co. - 1 - RF	

Answer	No
Document Name	
Comment	
Likes 0	
Dislikes 0	
Response	
John Pearson - ISO New England, Inc. - 2	
Answer	Yes
Document Name	
Comment	
While we agree that the modification meets the intent of the SAR, in sub-requirement R3.4 uses the term “”bolted 3-phase fault”. This is inconsistent with other NERC standards. We suggest simply using the term 3-phase fault.	
Likes 0	
Dislikes 0	
Response	
Thank you for your comment. Please see revised Standard.	
Anne Kronshage - Public Utility District No. 1 of Chelan County - 6, Group Name Public Utility District No. 1 of Chelan County - Voting Group	
Answer	Yes
Document Name	
Comment	

Requiring TOPs to have a documented risk assessment methodology for evaluating their applicable stations and establishing the minimum methodology requirements helps to address the issues identified in the SAR. However, the list of mandatory criteria under R3.1. is quite prescriptive; these sorts of standard practices are to be avoided, to be better suited under technical guidance. There is no precedence for this level of specificity in any other NERC study performance standard to our knowledge. Furthermore, NERC has failed to provide a rationale behind why all of these criteria are critical to be included in the assessment and analysis.

Additionally, in R3.2, there is a term '**other System conditions susceptible to** instability, uncontrolled separation, or Cascading within an Interconnection' (emphasis added). This is vague and undefined; the expectation is not clear, and this is a case of chicken-and-egg – one cannot know such an outcome unless one has run a study, but one would not run such a study unless one already knew that a particular condition was susceptible. It is recommended this language be removed. System peak and System Off-Peak are common terms in TPL-001-5 and are supported as adequate indicators. NERC may consider these being the required minimum study conditions, but open the door to such things as the 'other System conditions susceptible to'… as optional studies, or mandatory if requested by an RC, PC, etc (similar to the selection criteria of stations – moving that concept to the conditions to be studied as well).

Further, the modification in R3.2.2. regarding stations that have been identified as critical makes it unclear how or if a station may be "un-identified". For example, if a CAP speeds up clearing times for loss of communication times and this prevents an identified instability, could the analysis be re-run and the station re-categorized? This is unclear with the new language proposed in R3.2.2. It does not appear that such instances of de-listing a station have been contemplated.

As a piece of minor editorial recommendation; the sections 3.4, 3.5, and 3.6 following R3.3 are functionally sub-requirements of R3.3. It is recommended these be treated as R3.3.1, R3.3.2, and R3.3.3 instead. For item 3.4, it does not allow more severe faults; for example, if instead of bolting a fault at the highest voltage bus, faulting all lines into the station (regardless of voltage level) with a three phase bolted fault would arguably be a more severe event. However, the current language would not support running a more severe fault as an acceptable analysis. Furthermore, the 'highest voltage level bus' is ambiguous in cases where a station may have multiple bus sections (such as 500 kV breaker-and-a-half stations), or a transformer terminated line (such as a 500/230 kV transformer at a 230 kV station). In these cases, this prescriptive requirement seems to result in unclear or less severe events. Lastly, R3.6.2 currently requires the use of 'Actual clearing times', but the basis for this is unclear – hopefully these physical attacks have not occurred at many stations, so the 'actual' has never been observed. 'Expected' would be a more preferred term. Similarly, R3.6.1 requires use of Delayed (remote) clearing time, but if a scheme drops its zone 2 delay if communication is lost, here as well 'Expected' clearing time may be a better word choice.

Likes 0	

Dislikes 0	
Response	
Thank you for your comment. Please see revised Standard.	
Daniel Gacek - Exelon - 1, Group Name Exelon	
Answer	Yes
Document Name	
Comment	
Likes 0	
Dislikes 0	
Response	
Thank you for your support.	
Rachel Coyne - Texas Reliability Entity, Inc. - 10	
Answer	Yes
Document Name	
Comment	
Likes 0	
Dislikes 0	
Response	
Thank you for your support.	
Tim Kelley - Tim Kelley On Behalf of: Charles Norton, Sacramento Municipal Utility District, 3, 6, 4, 1, 5; Foung Mua, Sacramento Municipal Utility District, 3, 6, 4, 1, 5; Kevin Smith, Balancing Authority of Northern California, 1; Nicole Looney, Sacramento Municipal Utility District,	

3, 6, 4, 1, 5; Ryder Couch, Sacramento Municipal Utility District, 3, 6, 4, 1, 5; Wei Shao, Sacramento Municipal Utility District, 3, 6, 4, 1, 5; - Tim Kelley, Group Name SMUD and BANC	
Answer	Yes
Document Name	
Comment	
Likes 0	
Dislikes 0	
Response	
Thank you for your support.	
Richard Jackson - U.S. Bureau of Reclamation - 1	
Answer	Yes
Document Name	
Comment	
Likes 0	
Dislikes 0	
Response	
Thank you for your support.	
Devin Shines - PPL - Louisville Gas and Electric Co. - 1,3,5,6 - SERC,RF	
Answer	
Document Name	
Comment	

Louisville Gas & Electric and Kentucky Utilities support EEI's comments.	
Likes 0	
Dislikes 0	
Response	
Thank you for your comments. Please see EEI comment response.	

5. Do you agree with the modifications made in CIP-014-4 with new Requirement R4 to address the issues identified in the SAR?	
Jessica Cordero - Unisource - Tucson Electric Power Co. - 1	
Answer	No
Document Name	
Comment	
Unable to locate in the SAR where this is requested.	
Likes 0	
Dislikes 0	
Response	
Thank you for your comment.	
Matt Carden - Southern Company - Southern Company Services, Inc. - 1	
Answer	No
Document Name	
Comment	
Southern Company agrees with the need to coordinate responsibilities. However, we seek clarification regarding the requirement to document every 36 months responsibilities for stations that have already previously been coordinated and documented in previous assessments. Additionally, Southern Company wants to confirm the SDT intends to only require this coordination for jointly owned stations – not also stations with one owner that may have jointly owned equipment.	
Likes 0	
Dislikes 0	

Response	
Thank you for your comment. Please see revised Standard.	
Kevin Conway - Western Power Pool - 4	
Answer	No
Document Name	
Comment	
The R4 requirement goes beyond the SAR requiring coordination of responsibilities of jointly owned facilities every 36 calendar months. This is well beyond what the SAR states, and R4 should focus on written agreements determining responsibilities. Those agreements could sunset or be indefinite. Small entities, like those in the Pacific Northwest, commonly have interconnections with Bonneville Power, or other large agencies. They requirement to coordinate every 36 months will be burdensome, add compliance risk, and not enhance the process.	
Likes 0	
Dislikes 0	
Response	
Thank you for your comment. Please see revised Standard.	
Rebika Yitna - Rebika Yitna On Behalf of: Roger Brand, MEAG Power, 3, 1; - Rebika Yitna	
Answer	No
Document Name	
Comment	
Why is there a need to coordinate responsibilities every 36 months for stations that have already previously been coordinated and documented? Also, clarification is requested for 'jointly owned stations': Does the SDT intend to only require this coordination for jointly owned stations and not also for stations with one owner that may have jointly owned equipment?	
Likes 0	

Dislikes 0	
Response	
Thank you for your comment. Please see revised Standard.	
Jay Sethi - Manitoba Hydro - 1,3,5,6 - MRO, Group Name Manitoba Hydro Group	
Answer	No
Document Name	
Comment	
MH is suggesting including adjacent transmission owners with Transmission stations in close proximity (identified under R2) in addition to jointly owned Transmission stations to coordinate with each other when performing a risk assessment.	
Likes 0	
Dislikes 0	
Response	
Thank you for your comment. Please see revised Standard.	
Michele Tondalo - United Illuminating Co. - 1	
Answer	No
Document Name	
Comment	
Comment 24: R4 is worded that each Transmission Owner must coordinate with others on jointly owned facilities but does not indicate that this coordination can be performed concurrently. In addition, in R4 the inclusion of the at timing "…at least once every 36 months." Is easily confused with the timeframe for performing assessment in R5. Suggested rewording: *"At least once every 36 calendar months Transmission Owners with jointly owned Transmission station(s) and Transmission substation(s) shall jointly determine and identify each entity's individual and joint responsibilities for performing any required risk assessments.*	

Comment 25: R4 does not include details on how Transmission Owners shall coordinate with other sole-owners of proximal facilities identified in R2; it only discusses how to handle joint ownership. Suggest that R4 be expanded to make sure that Transmission Owners that own stations that are proximal are tested in a similar manner.	
Likes 0	
Dislikes 0	
Response	
Thank you for your comment. Please see revised Standard.	
Michele Shafer - New York State Electric & Gas (NYSEG) - 6	
Answer	No
Document Name	
Comment	
• R4 is worded that each Transmission Owner must coordinate with others on jointly owned facilities but does not indicate that this coordination can be performed concurrently. In addition, in R4 the inclusion of the at timing "…at least once every 36 months." Is easily confused with the timeframe for performing assessment in R5. Suggested rewording: "**At least once every 36 calendar months** Transmission Owner**s** with **jointly** owned Transmission station(s) and Transmission substation(s) shall jointly determine and identify each entity's individual and joint responsibilities for performing any required risk assessments. • R4 does not include details on how Transmission Owners shall coordinate with other sole-owners of proximal facilities identified in R2; it only discusses how to handle joint ownership. Suggest that R4 be expanded to make sure that Transmission Owners that own stations that are proximal are tested in a similar manner.	
Likes 0	
Dislikes 0	
Response	
Thank you for your comment. Please see revised Standard.	

Brian Millard - Tennessee Valley Authority - 1,3,5,6 - SERC, Group Name TVA RBB	
Answer	No
Document Name	
Comment	
TVA disagrees with the modifications made to R4. Additional clarity is needed regarding “coordination” and the compliance burden given the potential that one Transmission Owner may request coordination, but not receive a response from another Transmission Owner.	
Likes 0	
Dislikes 0	
Response	
Thank you for your comment. Please see revised Standard.	
Alan Kloster - Alan Kloster On Behalf of: Jeremy Harris, Evergy, 3, 5, 1, 6; Kevin Frick, Evergy, 3, 5, 1, 6; Marcus Moor, Evergy, 3, 5, 1, 6; Tiffany Lake, Evergy, 3, 5, 1, 6; - Alan Kloster	
Answer	No
Document Name	
Comment	
Evergy supports and incorporates by reference the comments of the Edison Electric Insitute (EEI) for question #5.	
Likes 0	
Dislikes 0	
Response	
Thank you for your comments. Please see EEI comment response.	

Cain Braveheart - Bonneville Power Administration - 1,3,5,6 - WECC	
Answer	No
Document Name	
Comment	
It appears to BPA that the SAR does not include content on a problem needing to be resolved when there is joint ownership of a substation. The SAR's purpose only states "Clarify how to account for adjacent Transmission stations or Transmission substations of differing ownership as well as for those Transmission stations or Transmission substations within line-of-sight to each other."	
Likes 0	
Dislikes 0	
Response	
Thank you for your comment. Please see revised Standard.	
Karen Demos - NextEra Energy - Florida Power and Light Co. - 3	
Answer	No
Document Name	
Comment	
NextEra/FPL supports EEI's comments	
Likes 0	
Dislikes 0	
Response	
Thank you for your comments. Please see EEI comment response.	

Richard Vendetti - NextEra Energy - 5	
Answer	No
Document Name	
Comment	
NEE support's EEI comments: " EEI proposes the following revisions to Requirement R4: Each Transmission Owner**s** with jointly owned Transmission station(s) and Transmission substation(s) shall coordinate to determine and identify each entity's individual and joint responsibilities for performing any required risk assessments at least once every 36 calendar months. "	
Likes 0	
Dislikes 0	
Response	
Thank you for your comments. Please see EEI comment response.	

Rachel Schuldt - Black Hills Corporation - 6, Group Name Black Hills Corporation - All Segments	
Answer	No
Document Name	
Comment	
Black Hills Corporation agrees with EEI comments and the proposed changes.	
Likes 0	
Dislikes 0	
Response	

Thank you for your comments. Please see EEI comment response.	
Sean Bodkin - Dominion - Dominion Resources, Inc. - 6, Group Name Dominion	
Answer	No
Document Name	
Comment	
Dominion Energy supports EEI comments.	
Likes 0	
Dislikes 0	
Response	
Thank you for your comments. Please see EEI comment response.	
John Pearson - ISO New England, Inc. - 2	
Answer	No
Document Name	
Comment	
For R4, the requirement should include join ownership proximity groups. *Each Transmission Owner with jointly owned Transmission station(s), Transmission substation(s)* ***and proximity groups*** *shall coordinate to determine and identify each entity's individual and joint responsibilities for performing any required risk assessments at least once every* 36 calendar months.	
Likes 0	
Dislikes 0	

Response	
Thank you for your comment. Please see revised Standard.	
Devin Shines - PPL - Louisville Gas and Electric Co. - 1,3,5,6 - SERC,RF	
Answer	No
Document Name	
Comment	
Louisville Gas & Electric and Kentucky Utilities support EEI's comments.	
Likes 0	
Dislikes 0	
Response	
Thank you for your comments. Please see EEI comment response.	
Israel Perez - Israel Perez On Behalf of: Laura Somak, Salt River Project, 3, 6, 5, 1; Mathew Weber, Salt River Project, 3, 6, 5, 1; Thomas Johnson, Salt River Project, 3, 6, 5, 1; Timothy Singh, Salt River Project, 3, 6, 5, 1; - Israel Perez	
Answer	No
Document Name	
Comment	
SRP supports the MRO NSRF with Tacoma Power’s comments.	
Likes 0	
Dislikes 0	
Response	

Thank you for your comments. Please see MRO NSRF comment response.	
Teresa Krabe - Lower Colorado River Authority - 5	
Answer	No
Document Name	
Comment	
The standard or guidance should explain how disagreements between entities should be handled. It is not clear if R4 is intended to incorporate the stations in close proximity identified in R2.	
Likes 0	
Dislikes 0	
Response	
Thank you for your comment. Please see revised Standard.	
Dave Krueger - SERC Reliability Corporation - 10	
Answer	No
Document Name	
Comment	
Thank you for the chance to comment, SERC appreciates the complexity of the SDT's task of modifying multiple parts of such a high profile and high-priority standard. Item #4.A: We would suggest the joint ownership language be made inclusive of multiple owners of Transmission Elements within a Transmission Station/Substation (vs ownership of the Station/Substation itself) since mixed ownership of the land, protection system components, and BES Facilities within and extending outward from the substation may vary significantly. One suggestion would be to state : "Each Transmission Owner with Transmission stations and Transmission Substations where a portion of the of the locations or its contents are	

jointly owned with another entity, shall….". This would allow flexibility under different ownership situations to be addressed in the manner desired by the owners and increase clarity.

Item #4.B SAR Scope Item #5 states "Clarify how to account for adjacent Transmission stations or Transmission substations of differing ownership…" It appears that conflict may arise if two separate TOs come to differing conclusions about the methodology parameters and criteria in R2, R3, and ultimately R5. This tracks back to gaining the full clarity mentioned in SAR Detailed Description #5: *"Provide clear expectations regarding the inclusion of physically adjacent elements for the purpose of evaluating the impact from a physical attack."* It is unclear on how the requirements as written will ensure consistency in inclusion such that the two (or more) differing owners do not come to different conclusions about the composition of proximity groups, the criteria for the risk assessment methodology, or the conclusions of the methodology per substation. Would it be clearer to state that absent some other factor, the most limiting of two competing conclusions would be used, similar to the language in TOP-001-6 R18?

Item #4.C: We would suggest that the phrase "and document" follow the verb "coordinate" to provide clarity on compliance evidence expectations. Evidentiary capture and demonstration of coordination occurring at a certain date has been difficult and problematic in other past standards, such as CIP-012-1 R1.3 ("…identification of…") and CIP-013-2 R1.1 ("…assess…") – adding "document" or a similar verb could address this.

Likes 0	
Dislikes 0	

Response

Thank you for your comment. Please see revised Standard.

Jeffrey Streifling - NB Power Corporation - 1

Answer	No
Document Name	

Comment

Is the 36-month periodicity regarding the coordination, the risk assessment, or both? We suggest adding that only changes in responsibilities of Joint substation or stations should be documented once every 36 months or attestation that no changes occurred in responsibilities during

the 36-month period. At scale, these substation and stations can be an administrative burden due to the number of agreements an entity may have, and an overarching document may be a better solution for management of these agreements. We are unsure of the intended goal or end value of the requirement and would like clarification. Does the outcome of the risk assessment need to be agreed to by both parties of a Joint substation or station? Additional clarification on what is expected for the outcome of the coordinated risk assessment should be clarified.	
Likes 0	
Dislikes 0	
Response	
Thank you for your comment. Please see revised Standard.	
Chantal Mazza - Chantal Mazza On Behalf of: Junji Yamaguchi, Hydro-Quebec (HQ), 1, 5; Nicolas Turcotte, Hydro-Quebec (HQ), 1, 5; - Chantal Mazza	
Answer	No
Document Name	
Comment	
Is the 36-month periodicity regarding the coordination, the risk assessment, or both? We suggest adding that only changes in responsibilities of Joint substation or stations should be documented once every 36 months or attestation that no changes occurred in responsibilities during the 36-month period. At scale, these substation and stations can be an administrative burden due to the number of agreements an entity may have, and an overarching document may be a better solution for management of these agreements. We are unsure of the intended goal or end value of the requirement and would like clarification. Does the outcome of the risk assessment need to be agreed to by both parties of a Joint substation or station? Additional clarification on what is expected for the outcome of the coordinated risk assessment should be clarified.	
Likes 0	
Dislikes 0	
Response	

Thank you for your comment. Please see revised Standard.	
Fon Hiew - NB Power Corporation - New Brunswick Power Transmission Corporation - 5	
Answer	No
Document Name	
Comment	
Is the 36-month periodicity regarding the coordination, the risk assessment, or both? We suggest adding that only changes in responsibilities of Joint substation or stations should be documented once every 36 months or attestation that no changes occurred in responsibilities during the 36-month period. At scale, these substation and stations can be an administrative burden due to the number of agreements an entity may have, and an overarching document may be a better solution for management of these agreements. We are unsure of the intended goal or end value of the requirement and would like clarification. Does the outcome of the risk assessment need to be agreed to by both parties of a Joint substation or station? Additional clarification on what is expected for the outcome of the coordinated risk assessment should be clarified.	
Likes 0	
Dislikes 0	
Response	
Thank you for your comment. Please see revised Standard.	
Andy Fuhrman - Andy Fuhrman On Behalf of: Theresa Allard, Minnkota Power Cooperative Inc., 1; - Andy Fuhrman	
Answer	No
Document Name	
Comment	
MPC strongly disagrees with the use of a 36 month timeframe for utilities who have not previously identified substations as critical for the same reasons specified in our comments for question 6.	

Likes 0	
Dislikes 0	
Response	
Thank you for your comment. Please see revised Standard.	
Hillary Creurer - Allete - Minnesota Power, Inc. - 1	
Answer	No
Document Name	
Comment	
Minnesota Power supports EEI's comments.	
Likes 0	
Dislikes 0	
Response	
Thank you for your comments. Please see EEI comment response.	
David Jendras Sr - Ameren - Ameren Services - 3	
Answer	No
Document Name	
Comment	
Ameren supports EEI's comments on this project.	
Likes 0	

Dislikes 0	

Response

Thank you for your comments. Please see EEI comment response.

Kristine Martz - Edison Electric Institute - NA - Not Applicable - NA - Not Applicable

Answer	No
Document Name	

Comment

EEI proposes the following revisions to Requirement R4:

Transmission Owner**s** with jointly owned Transmission station(s) and Transmission substation(s) shall coordinate to determine and identify each entity's individual and joint responsibilities for performing any required risk assessments.

Likes 0	
Dislikes 0	

Response

Thank you for your comment. Please see revised Standard.

Stephen Stafford - Stephen Stafford On Behalf of: Greg Davis, Georgia Transmission Corporation, 1; - Stephen Stafford

Answer	No
Document Name	

Comment

Jointly coordinating responsibilities related to an assessment is not problematic. However, this standard ties the risk assessment to analysis that the TO is not equipped to perform. Therefore, coordination is not possible until this problematic construct is addressed.

Likes 0	
Dislikes 0	
Response	
Thank you for your comment. Please see revised Standard.	
James Baldwin - James Baldwin On Behalf of: Matt Lewis, Lower Colorado River Authority, 5, 1; - James Baldwin	
Answer	No
Document Name	
Comment	
The standard or guidance should explain how disagreements between entities should be handled. It is not clear If R4 is intended to incorporate the stations in close proximity identified in R2.	
Likes 0	
Dislikes 0	
Response	
Thank you for your comment. Please see revised Standard.	
Selene Willis - Edison International - Southern California Edison Company - 5	
Answer	No
Document Name	
Comment	
See comments submitted by the Edison Eclectic Institute	
Likes 0	
Dislikes 0	

Response	
Thank you for your comments. Please see EEI comment response.	
Ruida Shu - Northeast Power Coordinating Council - 1,2,3,4,5,6,7,8,9,10 - NPCC, Group Name NPCC RSC	
Answer	No
Document Name	
Comment	
Is the 36-month periodicity regarding the coordination, the risk assessment, or both? We suggest adding that only changes in responsibilities of Joint substation or stations should be documented once every 36 months or attestation that no changes occurred in responsibilities during the 36-month period. At scale, these substation and stations can be an administrative burden due to the number of agreements an entity may have, and an overarching document may be a better solution for management of these agreements. We are unsure of the intended goal or end value of the requirement and would like clarification. Does the outcome of the risk assessment need to be agreed to by both parties of a Joint substation or station? Additional clarification on what is expected for the outcome of the coordinated risk assessment should be clarified.	
Likes 0	
Dislikes 0	
Response	
Thank you for your comment. Please see revised Standard.	
Dwanique Spiller - Berkshire Hathaway - NV Energy - 5	
Answer	No
Document Name	
Comment	

NV Energy supports the EEI response to this question.	
Likes 0	
Dislikes 0	
Response	
Thank you for your comments. Please see EEI comment response.	
Stephanie Kenny - Edison International - Southern California Edison Company - 6	
Answer	No
Document Name	
Comment	
See EEI comments	
Likes 0	
Dislikes 0	
Response	
Thank you for your comments. Please see EEI comment response.	
Gail Elliott - Gail Elliott On Behalf of: Michael Moltane, International Transmission Company Holdings Corporation, 1; - Gail Elliott	
Answer	No
Document Name	
Comment	

ITC supports the EEI response	
Likes 0	
Dislikes 0	
Response	
Thank you for your comments. Please see EEI comment response.	
Amy Wesselkamper - PNM Resources - Public Service Company of New Mexico - 3	
Answer	No
Document Name	
Comment	
PNM and TNMP support EEI comments regarding R4, noted again here *"EEI proposes the following revisions to Requirement R4:* *Transmission Owner**s** with jointly owned Transmission station(s) and Transmission substation(s) shall coordinate to determine and identify each entity's individual and joint responsibilities for performing any required risk assessments."*	
Likes 0	
Dislikes 0	
Response	
Thank you for your comments. Please see EEI comment response.	
Jason Snodgrass - Jason Snodgrass On Behalf of: Katrina Lyons, Georgia System Operations Corporation, 3, 4; - Jason Snodgrass	

Answer	No
Document Name	
Comment	
GSOC supports comments provided by Georgia Transmission	
Likes 0	
Dislikes 0	
Response	
Thank you for your comments. Please see Georgia Transmission comment response.	
Mark Garza - FirstEnergy - FirstEnergy Corporation - 4, Group Name FE Voter	
Answer	Yes
Document Name	
Comment	
FirstEnergy has no objection.	
Likes 0	
Dislikes 0	
Response	
Thank you for your support.	
Ben Hammer - Western Area Power Administration - 1	
Answer	Yes
Document Name	

Comment	
While WAPA agrees it is positive to have coordination with jointly owned entities, consider situations where the different methodologies result in a different answers, especially when taking into account different definitions of physical proximity.	
Likes 0	
Dislikes 0	
Response	
Thank you for your comment. Please see revised Standard.	
Michael Dillard - Austin Energy - 5, Group Name Austin Energy	
Answer	Yes
Document Name	
Comment	
Austin Energy supports MRO's comments. Attached in Question 1.	
Likes 0	
Dislikes 0	
Response	
Thank you for your comments. Please see MRO NSRF comment response.	
Ellese Murphy - Duke Energy - 1,3,5,6 - Texas RE,SERC,RF	
Answer	Yes
Document Name	
Comment	

We support the modifications made in R4.	
Likes 0	
Dislikes 0	
Response	
Thank you for your support.	
Mark Flanary - Midwest Reliability Organization - 10	
Answer	Yes
Document Name	
Comment	
As it is currently written the ordering with R4 coming later can cause some confusion and re-work. Consider combining / incorporating the intent of this Requirement into earlier Requirements, specifically R1 and R2, or reference R1 and R2 as part of R4.	
Likes 0	
Dislikes 0	
Response	
Thank you for your comment. Please see revised Standard.	
Carver Powers - Utility Services, Inc. - 4	
Answer	Yes
Document Name	
Comment	
Request clarification on the determination and identification of each entity’s individual and joint responsibilities for performing any required risk assessment. Does the determination need to be approved by both parties of the joint substation or station?	

Likes 0	
Dislikes 0	
Response	
Thank you for your comment. Please see revised Standard.	
Steven Rueckert - Western Electricity Coordinating Council - 10, Group Name WECC Entity Monitoring	
Answer	Yes
Document Name	
Comment	
Requirement R4 uses “jointly owned” which stalled Project 2021-08 is seeking to help define. Registered entities should be focused on the reliability aspects of both Projects and can easily limit compliance concerns by taking a practical approach to what is being requested to mitigate risk. Project 2021-08 suggested “For a BES Facility where no entity owns the Facility in its entirety, all applicable entities that own the Facility shall coordinate...”. A similar approach should be used here by stating “A Transmission station or Transmission substation where no single entity owns all equipment within the Transmission station or Transmission substation shall coordinate and document…” (with “and document” added to ensure that efforts are reflected appropriately. Industry should understand the risk (here related to physical security and reliability) associated with Transmission station(s) and Transmission substation(s) with multiple owners needs to be addressed.	
Likes 0	
Dislikes 0	
Response	
Thank you for your comment. Please see revised Standard.	
Robert Follini - Avista - Avista Corporation - 3	
Answer	Yes
Document Name	
Comment	

Likes 0	
Dislikes 0	
Response	
Thank you for your support.	
James Keele - Entergy - 3	
Answer	Yes
Document Name	
Comment	
Likes 0	
Dislikes 0	
Response	
Thank you for your support.	
Richard Jackson - U.S. Bureau of Reclamation - 1	
Answer	Yes
Document Name	
Comment	
Likes 0	
Dislikes 0	
Response	
Thank you for your support.	

Jennie Wike - Jennie Wike On Behalf of: John Merrell, Tacoma Public Utilities (Tacoma, WA), 1, 4, 5, 6, 3; - Jennie Wike, Group Name Tacoma Power	
Answer	Yes
Document Name	
Comment	
Likes 0	
Dislikes 0	
Response	
Thank you for your support.	
Kelley Sargent - Puget Sound Energy, Inc. - 3	
Answer	Yes
Document Name	
Comment	
Likes 0	
Dislikes 0	
Response	
Thank you for your support.	
Lucinda Bradshaw - Oncor Electric Delivery - 1 - Texas RE	
Answer	Yes
Document Name	
Comment	

Likes 0	
Dislikes 0	
Response	
Thank you for your support.	
Alison Nickells - NiSource - Northern Indiana Public Service Co. - 1 - RF	
Answer	Yes
Document Name	
Comment	
Likes 0	
Dislikes 0	
Response	
Thank you for your support.	
Tyler Schwendiman - ReliabilityFirst - 10	
Answer	Yes
Document Name	
Comment	
Likes 0	
Dislikes 0	
Response	
Thank you for your support.	

Anna Martinson - MRO - 1,2,3,4,5,6 - MRO, Group Name MRO Group	
Answer	Yes
Document Name	
Comment	
Likes 1	Lincoln Electric System, 1, Johnson Josh
Dislikes 0	
Response	
Thank you for your support.	
Leshel Hutchings - AEP - 3	
Answer	Yes
Document Name	
Comment	
Likes 0	
Dislikes 0	
Response	
Thank you for your support.	
TRACEY JOHNSON - Southern Indiana Gas and Electric Co. - 3,5,6 - RF	
Answer	Yes
Document Name	
Comment	

Likes 0	
Dislikes 0	
Response	
Thank you for your support.	
Diana Aguas - CenterPoint Energy Houston Electric, LLC - 1 - Texas RE	
Answer	Yes
Document Name	
Comment	
Likes 0	
Dislikes 0	
Response	
Thank you for your support.	
Anne Kronshage - Public Utility District No. 1 of Chelan County - 6, Group Name Public Utility District No. 1 of Chelan County - Voting Group	
Answer	Yes
Document Name	
Comment	
Likes 0	
Dislikes 0	
Response	
Thank you for your support.	
Jennifer Bray - Arizona Electric Power Cooperative, Inc. - 1	

Answer	Yes
Document Name	
Comment	
Likes 0	
Dislikes 0	
Response	
Thank you for your support.	
Donna Wood - Tri-State G and T Association, Inc. - 1	
Answer	Yes
Document Name	
Comment	
Likes 0	
Dislikes 0	
Response	
Thank you for your support.	
Tim Kelley - Tim Kelley On Behalf of: Charles Norton, Sacramento Municipal Utility District, 3, 6, 4, 1, 5; Foung Mua, Sacramento Municipal Utility District, 3, 6, 4, 1, 5; Kevin Smith, Balancing Authority of Northern California, 1; Nicole Looney, Sacramento Municipal Utility District, 3, 6, 4, 1, 5; Ryder Couch, Sacramento Municipal Utility District, 3, 6, 4, 1, 5; Wei Shao, Sacramento Municipal Utility District, 3, 6, 4, 1, 5; - Tim Kelley, Group Name SMUD and BANC	
Answer	Yes
Document Name	
Comment	

Likes 0	
Dislikes 0	
Response	
Thank you for your support.	
Joshua London - Eversource Energy - 1, Group Name Eversource	
Answer	Yes
Document Name	
Comment	
Likes 0	
Dislikes 0	
Response	
Thank you for your support.	
Andrew Smith - APS - Arizona Public Service Co. - 5	
Answer	Yes
Document Name	
Comment	
Likes 0	
Dislikes 0	
Response	
Thank you for your support.	

Rachel Coyne - Texas Reliability Entity, Inc. - 10	
Answer	Yes
Document Name	
Comment	
Likes 0	
Dislikes 0	
Response	
Thank you for your support.	
Denise Sanchez - Denise Sanchez On Behalf of: Diana Torres, Imperial Irrigation District, 1, 6, 5, 3; George Kirschner, Imperial Irrigation District, 1, 6, 5, 3; Jesus Sammy Alcaraz, Imperial Irrigation District, 1, 6, 5, 3; Tino Zaragoza, Imperial Irrigation District, 1, 6, 5, 3; - Denise Sanchez	
Answer	Yes
Document Name	
Comment	
Likes 0	
Dislikes 0	
Response	
Thank you for your support.	
Jesus Sammy Alcaraz - Imperial Irrigation District - 1	
Answer	Yes
Document Name	
Comment	

Likes 0	
Dislikes 0	
Response	
Thank you for your support.	
Mike Magruder - Avista - Avista Corporation - 1,3,5	
Answer	Yes
Document Name	
Comment	
Likes 0	
Dislikes 0	
Response	
Thank you for your support.	
Daniel Gacek - Exelon - 1, Group Name Exelon	
Answer	Yes
Document Name	
Comment	
Likes 0	
Dislikes 0	
Response	
Thank you for your support.	

Michael Jang - Seattle City Light - 1	
Answer	Yes
Document Name	
Comment	
Likes 0	
Dislikes 0	
Response	
Thank you for your support.	
Chris Shultz - Seattle City Light - 5	
Answer	Yes
Document Name	
Comment	
Likes 0	
Dislikes 0	
Response	
Thank you for your support.	
Robert Jones - Seattle City Light - 4	
Answer	Yes
Document Name	
Comment	

Likes 0	
Dislikes 0	
Response	
Thank you for your support.	
Daren Brubaker - Seattle City Light - 6	
Answer	Yes
Document Name	
Comment	
Likes 0	
Dislikes 0	
Response	
Thank you for your support.	
Zenon O'young-Chu - Seattle City Light - 3	
Answer	Yes
Document Name	
Comment	
Likes 0	
Dislikes 0	
Response	
Thank you for your support.	
Chris Wagner - Santee Cooper - 1, Group Name Santee Cooper	

Answer	Yes
Document Name	
Comment	
Likes 0	
Dislikes 0	
Response	
Thank you for your support.	
Jodirah Green - ACES Power Marketing - 1,3,4,5,6 - MRO,WECC,Texas RE,SERC,RF, Group Name ACES Collaborators	
Answer	Yes
Document Name	
Comment	
Likes 0	
Dislikes 0	
Response	
Thank you for your support.	

6. Do you agree with the modifications made in CIP-014-4 with adding Requirement R5 to address the issues identified in the SAR?	
Jodirah Green - ACES Power Marketing - 1,3,4,5,6 - MRO,WECC,Texas RE,SERC,RF, Group Name ACES Collaborators	
Answer	No
Document Name	
Comment	
The current draft, R5 requires a risk assessment without explicitly stating what the risk assessment is supposed to achieve. ACES suggests clarifying language to have a clear objective outcome based on the assessment.	
Likes 0	
Dislikes 0	
Response	
Thank you for your comment. Please see revised Standard.	
Jason Snodgrass - Jason Snodgrass On Behalf of: Katrina Lyons, Georgia System Operations Corporation, 3, 4; - Jason Snodgrass	
Answer	No
Document Name	
Comment	
GSOC supports comments provided by Georgia Transmission	
Likes 0	
Dislikes 0	
Response	
Thank you for your comments. Please see Georgia Transmission comment response.	

Amy Wesselkamper - PNM Resources - Public Service Company of New Mexico - 3	
Answer	No
Document Name	
Comment	
PNM and TNMP support EEI comments regarding R4, noted again here *"EEI proposes the following revision to Requirement R5 because R1 is the only requirement that speaks directly to applicability:* *Each Transmission Owner shall conduct a risk assessment, using the methodology established in Requirement R3, on each Transmission station(s) and Transmission substation(s) identified as applicable in accordance with Requirements R1, R2, and R4 at least once every 36 calendar months.* ***Jointly owned Transmission station(s) and Transmission substation(s) identified as applicable in Requirement R1 shall be evaluated as coordinated in Requirement R4."***	
Likes 0	
Dislikes 0	
Response	
Thank you for your comments. Please see EEI comment response.	
Gail Elliott - Gail Elliott On Behalf of: Michael Moltane, International Transmission Company Holdings Corporation, 1; - Gail Elliott	
Answer	No
Document Name	
Comment	
ITC supports the EEI response	

Likes 0	
Dislikes 0	
Response	
Thank you for your comments. Please see EEI comment response.	
Stephanie Kenny - Edison International - Southern California Edison Company - 6	
Answer	No
Document Name	
Comment	
See EEI comments	
Likes 0	
Dislikes 0	
Response	
Thank you for your comments. Please see EEI comment response.	
Dwanique Spiller - Berkshire Hathaway - NV Energy - 5	
Answer	No
Document Name	
Comment	
NV Energy supports the EEI response to this question.	
Likes 0	

Dislikes 0	
Response	
Thank you for your comments. Please see EEI comment response.	
Ruida Shu - Northeast Power Coordinating Council - 1,2,3,4,5,6,7,8,9,10 - NPCC, Group Name NPCC RSC	
Answer	No
Document Name	
Comment	
We suggest tightening the language of Part 5.2 dealing with proximity and ability of a TO ability to designate a Control Center with other TO or TOPs. We suggest added language about information security between entities where a TO designate another entities Control Center in part 5.2. A Requirement R5.3 should be added stating something similar to “Transmission Owners of stations within proximity of other Transmission Owners as determined in R2 should share the results of their analyses related to the stations within proximity with all the other Transmission Owners of the stations within proximity."	
Likes 0	
Dislikes 0	
Response	
Thank you for your comment. Please see revised Standard.	
Selene Willis - Edison International - Southern California Edison Company - 5	
Answer	No
Document Name	
Comment	

See comments submitted by the Edison Eclectic Institute	
Likes 0	
Dislikes 0	
Response	
Thank you for your comments. Please see EEI comment response.	
Denise Sanchez - Denise Sanchez On Behalf of: Diana Torres, Imperial Irrigation District, 1, 6, 5, 3; George Kirschner, Imperial Irrigation District, 1, 6, 5, 3; Jesus Sammy Alcaraz, Imperial Irrigation District, 1, 6, 5, 3; Tino Zaragoza, Imperial Irrigation District, 1, 6, 5, 3; - Denise Sanchez	
Answer	No
Document Name	
Comment	
IID disagrees with the language in Requirement R5 due to its lack of clear objectives or defined outcomes for implementation. The Requirement does not explicitly state the intended outcomes of the risk assessment nor clarify its purpose. It should be revised to address these aspects.	
Likes 0	
Dislikes 0	
Response	
Thank you for your comment. Please see revised Standard.	
James Baldwin - James Baldwin On Behalf of: Matt Lewis, Lower Colorado River Authority, 5, 1; - James Baldwin	
Answer	No
Document Name	

Comment
Under the Requirement, as currently written, it is unclear if the intent of R5.1 is to enable Registered Entities to maintain critical stations from previous 36-month assessments or if once a station is deemed critical during this year's study the additional studies in R3 are no longer necessary. R5 does not seem to address the next steps required after a proximity station not owned by a Registered Entity is identified as critical.

Likes 0	
Dislikes 0	

Response
Thank you for your comment. Please see revised Standard.

Stephen Stafford - Stephen Stafford On Behalf of: Greg Davis, Georgia Transmission Corporation, 1; - Stephen Stafford

Answer	No
Document Name	

Comment
R5 requires a risk assessment without explicitly stating what the risk assessment is supposed to achieve. This lack of clarity is the only reason that a third-party verification of the assessment is needed. GTC suggests R5 be revised to clearly state the objective of the assessment, including the types of attacks to be simulated and acceptable resulting system response. Additionally, the reference to R3 is problematic as the TO is not equipped to perform the analysis prescribed in that requirement. This reference should be to a study/evaluation received from the appropriate planning entity.

Likes 0	
Dislikes 0	

Response
Thank you for your comment. Please see revised Standard.

Kristine Martz - Edison Electric Institute - NA - Not Applicable - NA - Not Applicable

Answer	No
Document Name	
Comment	

EEI proposes the following revision to Requirement R5 because R1 is the only requirement that speaks directly to applicability:

Each Transmission Owner shall conduct a risk assessment, using the methodology established in Requirement R3, on each Transmission station(s) and Transmission substation(s) identified as applicable in accordance with Requirement R1 at least once every 36 calendar months. **Jointly owned Transmission station(s) and Transmission substation(s) identified as applicable in Requirement R1 shall be evaluated as coordinated in Requirement R4.**

Likes 0	
Dislikes 0	
Response	

Thank you for your comment. Please see revised Standard.

David Jendras Sr - Ameren - Ameren Services - 3

Answer	No
Document Name	
Comment	

Ameren supports EEI's comments on this project.

Likes 0	
Dislikes 0	
Response	

Thank you for your comments. Please see EEI comment response.

Hillary Creurer - Allete - Minnesota Power, Inc. - 1	
Answer	No
Document Name	
Comment	
Minnesota Power supports MRO-NSRF and EEI's comments.	
Likes 0	
Dislikes 0	
Response	
Thank you for your comments. Please see MRO NSRF and EEI comment responses.	
Andy Fuhrman - Andy Fuhrman On Behalf of: Theresa Allard, Minnkota Power Cooperative Inc., 1; - Andy Fuhrman	
Answer	No
Document Name	
Comment	
MPC disagrees with the use of a 36 month timeframe for utilities who have not previously identified any substations as critical as it is both outside the scope of the SAR and will lead to increased study costs with little or no benefit. During the 6/7/24 NERC webinar for the SAR, the SDT stated a goal of changing the risk assessment timeframe to 36 months was to align the risk assessment with the model build time frame of another standard. This goal is outside the scope of the SAR and otherwise irrelevant as the CIP-014 risk assessment does not require the use of models built for any other standard. Considering the very slow pace of construction of new electrical infrastructure, it is highly unlikely that a modification to an existing non-critical station or substation that would result in the station or substation becoming critical would be planned, designed, and constructed within 36 months. It is equally unlikely that a newly constructed CIP-014 critical substation would be completed within this timeframe. As	

stations and substations planned to be in service within 24 months of the risk assessment are already required to be included under R1 of CIP-014-3, changing the risk assessment timeframe from 60 months to 36 months is very unlikely to identify stations or substations that would not be identified under CIP-014-3. For utilities who have not identified previously identified substations as critical, moving the risk assessment timeframe to 36 months will result in increased costs due to more frequent risk assessments, with the more frequent assessments having no benefit as they have little to no chance of identifying stations or substations as CIP-014 critical that would not already have been under CIP-014-3.	
Likes 0	
Dislikes 0	
Response	
Thank you for your comment. Please see revised Standard.	
Fon Hiew - NB Power Corporation - New Brunswick Power Transmission Corporation - 5	
Answer	No
Document Name	
Comment	
We suggest tightening the language of Part 5.2 dealing with proximity and ability of a TO ability to designate a Control Center with other TO or TOPs. We suggest added language about information security between entities where a TO designate another entities Control Center in part 5.2. A Requirement R5.3 should be added stating something similar to “Transmission Owners of stations within proximity of other Transmission Owners as determined in R2 should share the results of their analyses related to the stations within proximity with all the other Transmission Owners of the stations within proximity."	
Likes 0	
Dislikes 0	
Response	

Thank you for your comment. Please see revised Standard.	
Chantal Mazza - Chantal Mazza On Behalf of: Junji Yamaguchi, Hydro-Quebec (HQ), 1, 5; Nicolas Turcotte, Hydro-Quebec (HQ), 1, 5; - Chantal Mazza	
Answer	No
Document Name	
Comment	
We suggest tightening the language of Part 5.2 dealing with proximity and ability of a TO ability to designate a Control Center with other TO or TOPs. We suggest added language about information security between entities where a TO designate another entities Control Center in part 5.2. A Requirement R5.3 should be added stating something similar to “Transmission Owners of stations within proximity of other Transmission Owners as determined in R2 should share the results of their analyses related to the stations within proximity with all the other Transmission Owners of the stations within proximity."	
Likes 0	
Dislikes 0	
Response	
Thank you for your comment. Please see revised Standard.	
Jeffrey Streifling - NB Power Corporation - 1	
Answer	No
Document Name	
Comment	
We suggest tightening the language of Part 5.2 dealing with proximity and ability of a TO ability to designate a Control Center with other TO or TOPs. We suggest added language about information security between entities where a TO designate another entities Control Center in part 5.2.	

A Requirement R5.3 should be added stating something similar to “Transmission Owners of stations within proximity of other Transmission Owners as determined in R2 should share the results of their analyses related to the stations within proximity with all the other Transmission Owners of the stations within proximity."	
Likes 0	
Dislikes 0	
Response	
Thank you for your comment. Please see revised Standard.	
Dave Krueger - SERC Reliability Corporation - 10	
Answer	No
Document Name	
Comment	

Item #5.A: In R5, the requirement language mentions “…on each transmission station(s) and Transmission substations…”. The word “each” is unclear if this is meant to also refer to substation proximity groups from R2/R3.5 as well as individual substations. Clarity in this linking language could provide clarity.

Item #5.B: In R5.1, the term “critical” is used for the first time. Is the implication that applicable Transmission Stations/Substations (or entire proximity groups) that ‘fail’ the R5 risk assessment are then formally called “critical”? Language indicating that in R5 (root) would be helpful, as R5.1 reads more as an exclusion. The language would likely need to be made consistent in other parts of the standard, such as R6.3, R8, R9, etc.

Item #5.C: In R5.1, in one case the requirement states, “identified as critical” and another states “classified as critical”. Are these different states, or could the verbs be standardized?

Item #5.D: In R5.2, the phrase “primary control center” does not utilize the NERC defined term ‘Control Center’. The Control Center term from the 706SDT had not reached its Effective Date at the time the original CIP-014-1 reached its compliance date, however moving to the standardized term now would reduce confusion and divergence between CIP-014 and the remainder of the CIP standards, especially as future

standards projects occur. We do agree with retaining the qualifier of "…that operationally controls…" to delineate between primary and cold backup sites. Item #5.E: In 5.2, the requirement does not acknowledge the situation where multiple control centers owned by different Responsible Entities (such as those with joint ownership as described in R4) may control some, but not all, of the Transmission Elements in a Transmission station/substation. There also exists the reality where some TO/TOPs may operate multiple 'hot-hot' Control Centers that are both constantly staffed and are able to immediately operationally control Transmission Elements. Suggest the term read "…primary control center(s)…" or "…primary Control Center(s)…" to affirm that all control centers with operational control need to be identified and allow flexibility for different types of Control Center configurations and joint ownership and operation of Elements. Item #5.F: In M5 (the measures for R5) suggest a clarification the that "..dated written or electronic documentation of the risk assessment satisfying Requirement R5 for **each** Transmission station and Transmission substation…" to clarify the level of detail needed, instead of an high-level executive summary of its performance.	
Likes 0	
Dislikes 0	
Response	
Thank you for your comment. Please see revised Standard.	
Teresa Krabe - Lower Colorado River Authority - 5	
Answer	No
Document Name	
Comment	
Under the Requirement, as currently written, it is unclear if the intent of R5.1 is to enable Registered Entities to maintain critical stations from previous 36-month assessments or if once a station is deemed critical during this year's study the additional studies in R3 are no longer necessary. R5 does not seem to address the next steps required after a proximity station not owned by a Registered Entity is identified as critical.	
Likes 0	

Dislikes 0	
Response	
Thank you for your comment. Please see revised Standard.	
Israel Perez - Israel Perez On Behalf of: Laura Somak, Salt River Project, 3, 6, 5, 1; Mathew Weber, Salt River Project, 3, 6, 5, 1; Thomas Johnson, Salt River Project, 3, 6, 5, 1; Timothy Singh, Salt River Project, 3, 6, 5, 1; - Israel Perez	
Answer	No
Document Name	
Comment	
SRP supports the MRO NSRF with Tacoma Power’s comments.	
Likes 0	
Dislikes 0	
Response	
Thank you for your comments. Please see MRO NSRF comment response.	
Devin Shines - PPL - Louisville Gas and Electric Co. - 1,3,5,6 - SERC,RF	
Answer	No
Document Name	
Comment	
Louisville Gas & Electric and Kentucky Utilities support EEI's comments.	
Likes 0	
Dislikes 0	

Response	
Thank you for your comments. Please see EEI comment response.	
John Pearson - ISO New England, Inc. - 2	
Answer	No
Document Name	
Comment	
Does R5.1 mean that once a station or substation becomes critical, then it is forever critical? This seems arbitrary since there is no requirement to retest critical stations. Over time and with system topology changes, stations may no longer be critical and provisions should be made to perform periodic reviews to determine if they remain CIP-014 critical.	
Likes 0	
Dislikes 0	
Response	
Thank you for your comment. Please see revised Standard.	
Sean Bodkin - Dominion - Dominion Resources, Inc. - 6, Group Name Dominion	
Answer	No
Document Name	
Comment	
Dominion Energy supports EEI comments.	
Likes 0	
Dislikes 0	

Response	
Thank you for your comments. Please see EEI comment response.	
Ellese Murphy - Duke Energy - 1,3,5,6 - Texas RE,SERC,RF	
Answer	No
Document Name	
Comment	
We recommend that the Drafting Team clarify applicability in R5. Are R3.2.2 and R5.1 redundant to each other?	
Likes 0	
Dislikes 0	
Response	
Thank you for your comment. Please see revised Standard.	
Rachel Schuldt - Black Hills Corporation - 6, Group Name Black Hills Corporation - All Segments	
Answer	No
Document Name	
Comment	
Black Hills Corporation agrees with EEI comments that the proposed modification to Requirement R5, have the references to R2 and R4 removed from R5, as only Requirement R1 sets the applicable station(s) or substation(s).	
Likes 0	
Dislikes 0	
Response	

Thank you for your comments. Please see EEI comment response.

Tim Kelley - Tim Kelley On Behalf of: Charles Norton, Sacramento Municipal Utility District, 3, 6, 4, 1, 5; Foung Mua, Sacramento Municipal Utility District, 3, 6, 4, 1, 5; Kevin Smith, Balancing Authority of Northern California, 1; Nicole Looney, Sacramento Municipal Utility District, 3, 6, 4, 1, 5; Ryder Couch, Sacramento Municipal Utility District, 3, 6, 4, 1, 5; Wei Shao, Sacramento Municipal Utility District, 3, 6, 4, 1, 5; - Tim Kelley, Group Name SMUD and BANC	
Answer	No
Document Name	
Comment	

Requirement R5 does not specify what outcome the risk assessment is trying to achieve. The Standards Drafting Team should revise the language to ensure the risk assessment identifies which Transmission station(s) and Transmission substation(s) are “critical” and provide parameters for what “critical” means. As currently written, Requirement R5 has the Transmission Owner identify the primary control center that operationally controls each Transmission station or Transmission substation classified as critical, however, the identification of the “critical” Transmission station(s) or Transmission substation(s) is missing.

We recommend that the Standards Drafting Team revise Requirement R5 to clarify that the outcome of the risk assessment is the identification of the “critical” Transmission station(s) or Transmission substation(s). To accomplish this, we propose the following language for Requirement R5:

“Each Transmission Owner shall conduct a risk assessment, using the methodology established in Requirement R3, on each Transmission station(s) and Transmission substation(s) identified as applicable in accordance with Requirements R1, R2, and R4 at least once every 36 calendar months **to identify the Transmission station(s) and Transmission substation(s) that if rendered inoperable or damaged could result in instability, uncontrolled separation, or Cascading within an Interconnection**”.

No changes are necessary for sub-requirements R5.1 and R5.2.

Likes 0	
Dislikes 0	

Response	
Thank you for your comment. Please see revised Standard.	
Donna Wood - Tri-State G and T Association, Inc. - 1	
Answer	No
Document Name	
Comment	
Tri-State agrees with the MRO NSRF Submitted Comments	
Likes 0	
Dislikes 0	
Response	
Thank you for your comments. Please see MRO NSRF comment response.	
Richard Vendetti - NextEra Energy - 5	
Answer	No
Document Name	
Comment	
NEE support's EEI comments: "EEI proposes the following revision to Requirement R5 because R1 is the only requirement that speaks directly to applicability: Each Transmission Owner shall conduct a risk assessment, using the methodology established in Requirement R3, on each Transmission station(s) and Transmission substation(s) identified as applicable in accordance with Requirements R1, R2, and R4 at least once every 36 calendar months. **Jointly owned Transmission station(s) and Transmission substation(s) identified as applicable in Requirement R1 shall be evaluated as coordinated in Requirement R4.** "	

Likes 0	
Dislikes 0	
Response	
Thank you for your comments. Please see EEI comment response.	
Jennifer Bray - Arizona Electric Power Cooperative, Inc. - 1	
Answer	No
Document Name	
Comment	
AEPC signed on to ACES comments below: The current draft, R5 requires a risk assessment without explicitly stating what the risk assessment is supposed to achieve. ACES suggests clarifying language to have a clear objective outcome based on the assessment.	
Likes 0	
Dislikes 0	
Response	
Thank you for your comments. Please see ACES comment response.	
Anne Kronshage - Public Utility District No. 1 of Chelan County - 6, Group Name Public Utility District No. 1 of Chelan County - Voting Group	
Answer	No
Document Name	
Comment	

Modifying the study periodicity requirement from 60-months (CIP-014-3) to 36-months (CIP-014-4) increases consumption of resources for utilities that do not own any applicable stations that, if rendered damaged or inoperable as a result of a physical attack, result in instability, uncontrolled islanding, or Cascading. The updates to CIP-014-4 R1 requiring TOPs to establish and a maintain a list every 36-months can help address the issues identified in the SAR but requiring all TOPs to conduct an assessment every 36 months increases burden on utilities that have previously only been required to perform CIP-014 studies in alignment with the 60-month requirement. However, if R1 could include the new 36-month list maintenance periodicity while R5 maintains the existing CIP-014-3 60 calendar month periodicity for utilities that demonstrate through their completed CIP-014 risk assessments that they do not own these impactful facilities, then the proposed updates to R1 and R5 support NERC goals to address issues identified in the SAR without causing additional burden.

Additionally, as noted in prior comments, R5's assessment does not allow for/contemplate how utilities may change / remediate performance deficiencies to not cause cascading, instability, or uncontrolled separation. This is a more positive outcome for the system than a tall fence and a big gate, to which an attacker may simply move to the 1st transmission structures outside the station and cause the same level of damage, with the added station protections under CIP-014 for naught.

Likes 0	
Dislikes 0	

Response

Thank you for the comment. The SDT felt the 36 months' timeframe met the directives in the SAR without putting an undue burden on industry.

Diana Aguas - CenterPoint Energy Houston Electric, LLC - 1 - Texas RE

Answer	No
Document Name	

Comment

CenterPoint Energy Houston Electric, LLC agrees with the 36-calendar month time frame, but does not agree with R3 details as written, due to the reasons mentioned in Question 4

Likes 0	
Dislikes 0	
Response	
Thank you for your comment. Please see revised Standard.	
Michael Dillard - Austin Energy - 5, Group Name Austin Energy	
Answer	No
Document Name	
Comment	
Austin Energy supports MRO's comments. Attached in Question 1.	
Likes 0	
Dislikes 0	
Response	
Thank you for your comments. Please see MRO NSRF comment response.	
TRACEY JOHNSON - Southern Indiana Gas and Electric Co. - 3,5,6 - RF	
Answer	No
Document Name	
Comment	
Southern Indiana Gas and Electric d/b/a CenterPoint Energy Indiana South (SIGE) agrees with the 36-calendar month time frame, but does not agree with R3 details as written, due to the reasons mentioned in Question 4.	
Likes 0	

Dislikes 0	
Response	
Thank you for your comment. Please see revised Standard.	
Ben Hammer - Western Area Power Administration - 1	
Answer	No
Document Name	
Comment	
WAPA concurs with the comments provided by the MRO NSRF.	
Likes 0	
Dislikes 0	
Response	
Thank you for your comments. Please see MRO NSRF comment response.	
Karen Demos - NextEra Energy - Florida Power and Light Co. - 3	
Answer	No
Document Name	
Comment	
NextEra/FPL supports EEI's comments	
Likes 0	
Dislikes 0	
Response	

Thank you for your comments. Please see EEI comment response.	
Cain Braveheart - Bonneville Power Administration - 1,3,5,6 - WECC	
Answer	No
Document Name	
Comment	
BPA agrees with conducting risk assessments every 36 months for Transmission station(s) or Transmission substation(s) identified as applicable. BPA does not agree with requiring subsequent risk assessment(s) if they continue to be classified as critical.	
Likes 0	
Dislikes 0	
Response	
Thank you for your comment. Please see revised Standard.	
Leshel Hutchings - AEP - 3	
Answer	No
Document Name	
Comment	
R5 Section 5.1 5.1 is duplicative with 3.2.2 – suggest removing 5.1 or at least one of them.	
Likes 0	
Dislikes 0	
Response	

Thank you for your comment. Please see revised Standard.	
Alan Kloster - Alan Kloster On Behalf of: Jeremy Harris, Evergy, 3, 5, 1, 6; Kevin Frick, Evergy, 3, 5, 1, 6; Marcus Moor, Evergy, 3, 5, 1, 6; Tiffany Lake, Evergy, 3, 5, 1, 6; - Alan Kloster	
Answer	No
Document Name	
Comment	
Evergy supports and incorporates by reference the comments of the Edison Electric Insitute (EEI) and MRO NSRF for question #7.	
Likes 0	
Dislikes 0	
Response	
Thank you for your comments. Please see MRO NSRF and EEI comment responses	
Anna Martinson - MRO - 1,2,3,4,5,6 - MRO, Group Name MRO Group	
Answer	No
Document Name	
Comment	
As drafted, R5 requires a risk assessment without explicitly stating what the risk assessment is supposed to achieve. The MRO NSRF recommends adding language to clarify the objective or outcome of the risk assessment, “to identify the Transmission station(s) and Transmission substation(s) that if rendered inoperable or damaged though a realistic physical attack scenario could result in instability, uncontrolled separation, or Cascading within an Interconnection”. Additionally, the SDT should clarify within R5.1 that an entity can deem one of its substations as critical and treat it as such without having to perform a risk assessment. This can either be a substation that had a previous risk assessment performed and does not require a subsequent	

(as 5.1 is currently drafted), or a substation that the entity volunteers to treat a critical without any risk assessment. It sounds like the SDT had this intent in the draft, but the wording does not make this clear.	
Likes 1	Lincoln Electric System, 1, Johnson Josh
Dislikes 0	
Response	
Thank you for your comment. Please see revised Standard.	
Michele Shafer - New York State Electric & Gas (NYSEG) - 6	
Answer	No
Document Name	
Comment	
• R5 states facilities "…identified as applicable in accordance with Requirements R1, R2 and R4…" however, R4 does include information on applicability of facilities. Suggest that the final sentence of R5 be reworded: "Each Transmission Owner shall conduct a risk assessment, using the methodology established in Requirement R3, on each Transmission station(s) and Transmission substation(s) identified as applicable in accordance with Requirements R1, R2 **and the individual and joint responsibilities identified in R4**, at least once every 36 calendar months."	
Likes 0	
Dislikes 0	
Response	
Thank you for your comment. Please see revised Standard.	
Michele Tondalo - United Illuminating Co. - 1	
Answer	No
Document Name	
Comment	

Comment 26: R5 states facilities "…identified as applicable in accordance with Requirements R1, R2 and R4…" however, R4 does include information on applicability of facilities. Suggest that the final sentence of R5 be reworded:

"Each Transmission Owner shall conduct a risk assessment, using the methodology established in Requirement R3, on each Transmission station(s) and Transmission substation(s) identified as applicable in accordance with Requirements R1, R2 and the individual and joint responsibilities identified in R4, at least once every 36 calendar months."

Likes 0	
Dislikes 0	

Response

Thank you for your comment. Please see revised Standard.

Lucinda Bradshaw - Oncor Electric Delivery - 1 - Texas RE

Answer	No
Document Name	

Comment

See Oncor's Comments in response to Question 2 above.

Likes 0	
Dislikes 0	

Response

Thank you for your comments. Please see Oncor comment response.

Jennie Wike - Jennie Wike On Behalf of: John Merrell, Tacoma Public Utilities (Tacoma, WA), 1, 4, 5, 6, 3; - Jennie Wike, Group Name
Tacoma Power

Answer	No
Document Name	
Comment	

Tacoma Power supports the MRO NSRF comments, as follows.

As drafted, R5 requires a risk assessment without explicitly stating what the risk assessment is supposed to achieve. The MRO NSRF recommends adding language to clarify the objective or outcome of the risk assessment, “to identify the Transmission station(s) and Transmission substation(s) that if rendered inoperable or damaged though a realistic physical attack scenario could result in instability, uncontrolled separation, or Cascading within an Interconnection”.

Additionally, the SDT should clarify within R5.1 that an entity can deem one of its substations as critical and treat it as such without having to perform a risk assessment. This can either be a substation that had a previous risk assessment performed and does not require a subsequent (as 5.1 is currently drafted), or a substation that the entity volunteers to treat a critical without any risk assessment. It sounds like the SDT had this intent in the draft, but the wording does not make this clear.

Likes 0	
Dislikes 0	
Response	

Thank you for your comments. Please see MRO NSRF comment response.

Kevin Conway - Western Power Pool - 4	
Answer	No
Document Name	
Comment	

The first concern is in R 5.2 where the Transmission Owner is responsible for the primary [C]control [C]enter identification. TOs do not operate control centers and have no authority to designate what their TOP choses to do. In smaller agencies there may be multiple primary

Control Centers due the geographic operation of the entity. In the case of this requirement the use of “control center” in its non-capitalized form causes confusion which has been a problem for several Standard Drafting Teams. The Drafting Team should consider that every TO must provide a list of its critical facilities to the TOP. The TOP must declare the associated “Control Centers” critical if there are any identified critical facilities that it controls. R 5 is appropriately requiring a review of the facilities every 36 months. R5.1 should be removed since it allows an entity to forego a reassessment of the facilities’ threats and vulnerabilities. These will change over time, and although a critical facility may remain classified as critical, the Risk Assessment may change and require additional, or different mitigation measures.	
Likes 0	
Dislikes 0	
Response	
Thank you for your comment. Please see revised Standard.	
Jessica Cordero - Unisource - Tucson Electric Power Co. - 1	
Answer	No
Document Name	
Comment	
Recommend removal of R5.1 entirely. Does not provide for de-classification of a Transmission Substation from critical to non-critical. Does not prevent a station from being studied once and never re-evaluated in subsequent risk assessments.	
Likes 0	
Dislikes 0	
Response	
Thank you for your comment. Please see revised Standard.	
Joshua London - Eversource Energy - 1, Group Name Eversource	
Answer	No

Document Name	
Comment	
Likes 0	
Dislikes 0	
Response	
Steven Rueckert - Western Electricity Coordinating Council - 10, Group Name WECC Entity Monitoring	
Answer	Yes
Document Name	
Comment	
There is no context provided for determining what is “critical”. Should the context be “Those Transmission station(s) and Transmission substation(s) whose loss results in or that cause instability, uncontrolled separation or Cascading are considered critical”? Need to address use of “months” versus “calendar months”. Is R2 already subsumed by R1’s reference to using Attachment 1 which contains bullet 2.1? If considered added for clarity (which is appropriate) then the DT should consider similar language in R3. Capitalize “control center” as it is a defined term. Understood that the lower case term originated from FERC but FERC also lower cases functional entities. NERC Standards should be consistent. May also need to pluralize Control Center to avoid confusion.	
Likes 0	
Dislikes 0	
Response	
Thank you for your comment. Please see revised Standard.	
Robert Jones - Seattle City Light - 4	
Answer	Yes

Document Name	
Comment	
Language in 5.2 could use some work on clarity.	
Likes 0	
Dislikes 0	
Response	
Thank you for your comment. Please see revised Standard.	
Chris Shultz - Seattle City Light - 5	
Answer	Yes
Document Name	
Comment	
Language in 5.2 could use some work on clarity.	
Likes 0	
Dislikes 0	
Response	
Thank you for your comment. Please see revised Standard.	
Mark Flanary - Midwest Reliability Organization - 10	
Answer	Yes
Document Name	
Comment	

While it's implied by the order of the requirements, it could be clarified that R5 would be completed after R1-R4 to ensure the risk assessment is properly informed. Performing the Requirements out of order can create a situation where the risk assessment is not using information that accurately represents the current environment. Consider a timing component to the requirement, such as "Following completion of R1, R2, and R4, within # calendar months complete a risk assessment..."	
Likes 0	
Dislikes 0	
Response	
Thank you for your comment. Please see revised Standard.	
Mark Garza - FirstEnergy - FirstEnergy Corporation - 4, Group Name FE Voter	
Answer	Yes
Document Name	
Comment	
FirstEnergy has no objection.	
Likes 0	
Dislikes 0	
Response	
Thank you for the support.	
Jay Sethi - Manitoba Hydro - 1,3,5,6 - MRO, Group Name Manitoba Hydro Group	
Answer	Yes
Document Name	
Comment	

It is recommended that R5 also provides the flexibility to remove non-critical stations from subsequent risk assessments provided that TOs provide a technical justification.	
Likes 0	
Dislikes 0	
Response	
Thank you for your comment. Please see revised Standard.	
Rebika Yitna - Rebika Yitna On Behalf of: Roger Brand, MEAG Power, 3, 1; - Rebika Yitna	
Answer	Yes
Document Name	
Comment	
Only if the language in R3 is updated to be less prescriptive.	
Likes 0	
Dislikes 0	
Response	
Thank you for your comment. Please see revised Standard.	
Chris Wagner - Santee Cooper - 1, Group Name Santee Cooper	
Answer	Yes
Document Name	
Comment	
Likes 0	

Dislikes 0	
Response	
Thank you for the support.	
Zenon O'young-Chu - Seattle City Light - 3	
Answer	Yes
Document Name	
Comment	
Likes 0	
Dislikes 0	
Response	
Thank you for the support.	
Daren Brubaker - Seattle City Light - 6	
Answer	Yes
Document Name	
Comment	
Likes 0	
Dislikes 0	
Response	
Thank you for the support.	
Carver Powers - Utility Services, Inc. - 4	
Answer	Yes

Document Name	
Comment	
Likes 0	
Dislikes 0	
Response	
Thank you for the support.	
Michael Jang - Seattle City Light - 1	
Answer	Yes
Document Name	
Comment	
Likes 0	
Dislikes 0	
Response	
Thank you for the support.	
Daniel Gacek - Exelon - 1, Group Name Exelon	
Answer	Yes
Document Name	
Comment	
Likes 0	
Dislikes 0	

Response	
Thank you for the support.	
Mike Magruder - Avista - Avista Corporation - 1,3,5	
Answer	Yes
Document Name	
Comment	
Likes 0	
Dislikes 0	
Response	
Thank you for the support.	
Rachel Coyne - Texas Reliability Entity, Inc. - 10	
Answer	Yes
Document Name	
Comment	
Likes 0	
Dislikes 0	
Response	
Thank you for the support.	
Andrew Smith - APS - Arizona Public Service Co. - 5	
Answer	Yes
Document Name	

Comment	
Likes 0	
Dislikes 0	
Response	
Thank you for the support.	
Brian Millard - Tennessee Valley Authority - 1,3,5,6 - SERC, Group Name TVA RBB	
Answer	Yes
Document Name	
Comment	
Likes 0	
Dislikes 0	
Response	
Thank you for the support.	
Tyler Schwendiman - ReliabilityFirst - 10	
Answer	Yes
Document Name	
Comment	
Likes 0	
Dislikes 0	
Response	

Thank you for the support.	
Alison Nickells - NiSource - Northern Indiana Public Service Co. - 1 - RF	
Answer	Yes
Document Name	
Comment	
Likes 0	
Dislikes 0	
Response	
Thank you for the support.	
Kelley Sargent - Puget Sound Energy, Inc. - 3	
Answer	Yes
Document Name	
Comment	
Likes 0	
Dislikes 0	
Response	
Thank you for the support.	
Matt Carden - Southern Company - Southern Company Services, Inc. - 1	
Answer	Yes
Document Name	
Comment	

Likes 0	
Dislikes 0	
Response	
Thank you for the support.	
Richard Jackson - U.S. Bureau of Reclamation - 1	
Answer	Yes
Document Name	
Comment	
Likes 0	
Dislikes 0	
Response	
Thank you for the support.	
James Keele - Entergy - 3	
Answer	Yes
Document Name	
Comment	
Likes 0	
Dislikes 0	
Response	
Thank you for the support.	

Robert Follini - Avista - Avista Corporation - 3	
Answer	Yes
Document Name	
Comment	
Likes 0	
Dislikes 0	
Response	
Thank you for the support.	
Jesus Sammy Alcaraz - Imperial Irrigation District - 1	
Answer	
Document Name	
Comment	
IID disagrees with the language in Requirement R5 due to its lack of clear objectives or defined outcomes for implementation. The Requirement does not explicitly state the intended outcomes of the risk assessment nor clarify its purpose. It should be revised to address these aspects.	
Likes 0	
Dislikes 0	
Response	
Thank you for your comment. Please see revised Standard.	

7. Do you agree with the Implementation Plan for CIP-014-4?	
Jessica Cordero - Unisource - Tucson Electric Power Co. - 1	
Answer	No
Document Name	
Comment	
Clearly define completion of initial CIP-014-4 Risk Assessment and transition from CIP-014-3. Initial CIP-014-4 Risk Assessment should be completed within 30 months of the previous CIP-014-3 Risk Assessment.	
Likes 0	
Dislikes 0	
Response	
Thank you for your comment. Please see revised Implementation Plan.	
Jay Sethi - Manitoba Hydro - 1,3,5,6 - MRO, Group Name Manitoba Hydro Group	
Answer	No
Document Name	
Comment	
Manitoba Hydro agrees with the content and timelines in the implementation plan however as written the standard would be difficult to implement effectivly in that timeline (please see previous comments).	
Likes 0	
Dislikes 0	

Response	
Thank you for your comment. Please see revised Implementation Plan.	
Michele Tondalo - United Illuminating Co. - 1	
Answer	No
Document Name	
Comment	
Comment 27: It is conceivable that an entity may have finished a CIP-014-3 study just prior to CIP-014-4 becoming effective. If the SDT believes that a CIP-014-4 study meets the requirements of CIP-014-4 it should be documented in the Implementation Plan to assist entities in that situation.	
Likes 0	
Dislikes 0	
Response	
Thank you for your comment. Please see revised Implementation Plan.	
Michele Shafer - New York State Electric & Gas (NYSEG) - 6	
Answer	No
Document Name	
Comment	
• It is conceivable that an entity may have finished a CIP-014-3 study just prior to CIP-014-4 becoming effective. If the SDT believes that a *CIP-014-4* study meets the requirements of CIP-014-4 it should be documented in the Implementation Plan to assist entities in that situation.	
Likes 0	

Dislikes 0	
Response	
Thank you for your comment. Please see revised Implementation Plan.	
Brian Millard - Tennessee Valley Authority - 1,3,5,6 - SERC, Group Name TVA RBB	
Answer	No
Document Name	
Comment	
TVA requests the implementation plan be moved from 24 to 36 months.	
Likes 0	
Dislikes 0	
Response	
Thank you for your comment. Please see revised Implementation Plan for clarification.	
Alan Kloster - Alan Kloster On Behalf of: Jeremy Harris, Evergy, 3, 5, 1, 6; Kevin Frick, Evergy, 3, 5, 1, 6; Marcus Moor, Evergy, 3, 5, 1, 6; Tiffany Lake, Evergy, 3, 5, 1, 6; - Alan Kloster	
Answer	No
Document Name	
Comment	
Evergy supports and incorporates by reference the comments of the Edison Electric Insitute (EEI) for question #7.	
Likes 0	

Dislikes 0	

Response

Thank you for your comments. Please see EEI comment response.

Leshel Hutchings - AEP - 3

Answer	No
Document Name	

Comment

The implementation plan is 24 months, and the compliance timeline is 36 months. The implementation plan should be 36 months, no shorter.

The proposed implementation plan is 24 months. This means some Transmission Owners may have insufficient time, less than 36 months, to complete their next assessment based on the new standard. Example: a TO with an existing compliance deadline at the end of this year may fall under the shortened timeline. For large TOs, the existing applicability scoring, case prep, steady state and stability analysis, and third-party review can take as long as 1 year to perform per region. AEP has three regions (PJM, SPP, and ERCOT), which each take this amount of time. With the proposed proximity/applicability changes, scenario changes, and this implementation period would be insufficient time to adopt and reperform the assessment. In addition, given the new proximity criteria some small TOs may not have had any applicable stations previously and will have to create a new methodology and perform the assessment from scratch within that short 24-month period.

Likes 0	
Dislikes 0	

Response

Thank you for your comment. Please see revised Implementation Plan for clarification.

Cain Braveheart - Bonneville Power Administration - 1,3,5,6 - WECC

Answer	No
Document Name	
Comment	
The current cycle for CIP-014-3 R1 is 30 months. BPA believes requiring a fixed mandatory enforcement date may not align with entities' assessment schedules. BPA seeks clarity regarding how the SDT believes entities will demonstrate compliance with CIP-014-3 R1, then a new mid-cycle R1 assessment for CIP-014-4 R1.	
Likes 0	
Dislikes 0	
Response	
Thank you for your comment. Please see revised Implementation Plan for clarification.	
Karen Demos - NextEra Energy - Florida Power and Light Co. - 3	
Answer	No
Document Name	
Comment	
NextEra/FPL supports EEI's comments	
Likes 0	
Dislikes 0	
Response	
Thank you for your comments. Please see EEI comment response.	

Rachel Schuldt - Black Hills Corporation - 6, Group Name Black Hills Corporation - All Segments	
Answer	No
Document Name	
Comment	
Black Hills Corporation agrees with EEI comments on the clarification of the Implementation Plan for CIP-014-4.	
Likes 0	
Dislikes 0	
Response	
Thank you for your comments. Please see EEI comment response.	
Ellese Murphy - Duke Energy - 1,3,5,6 - Texas RE,SERC,RF	
Answer	No
Document Name	
Comment	
Duke Energy support EEI comments on the implementation plan.	
Likes 0	
Dislikes 0	
Response	
Thank you for your comments. Please see EEI comment response.	

Israel Perez - Israel Perez On Behalf of: Laura Somak, Salt River Project, 3, 6, 5, 1; Mathew Weber, Salt River Project, 3, 6, 5, 1; Thomas Johnson, Salt River Project, 3, 6, 5, 1; Timothy Singh, Salt River Project, 3, 6, 5, 1; - Israel Perez	
Answer	No
Document Name	
Comment	
SRP supports the MRO NSRF with Tacoma Power's comments.	
Likes 0	
Dislikes 0	
Response	
Thank you for your comments. Please see MRO NSRF comment response.	
Teresa Krabe - Lower Colorado River Authority - 5	
Answer	No
Document Name	
Comment	
Likes 0	
Dislikes 0	
Response	
Dave Krueger - SERC Reliability Corporation - 10	
Answer	No

Document Name	
Comment	

Thank you for the chance to comment, SERC appreciates the complexity of the SDT's task of modifying multiple parts of such a high-profile and high-priority standard.

· Item #Implement.A: Given the long timelines and consideration of substations or Transmission elements to be constructed in the future, the Implementation plan should explicitly provide more detailed examples to cover scenarios such as the identification of a station being put in service within the next 36 months, responsibilities for newly registered entities, what constitutes an "unplanned change"', etc. These are common questions received given the longer time horizons of the new R1-R5, especially since CIP-014 is not dependent on CIP-002-5.1a R1/R2 for initiation/identification/classification. By providing concrete written examples in the Implementation Plan now (instead of in future Implementation Guidance), clarity on these situations would also address the SAR's Detailed Description #2, *"…Revisions to the risk assessment should be made to only include transmission and generation projects that are appropriate to the periodicity of the entity's risk assessments. Determinations of appropriateness should be clarified to align study periods, frequency of studies, and the power flow models used."*

Likes 0	
Dislikes 0	
Response	

Thank you for your comment. Please see revised Implementation Plan for clarification.

Rachel Coyne - Texas Reliability Entity, Inc. - 10	
Answer	No
Document Name	
Comment	

Requirement Part 1.2 states that a review of the list of applicable Transmission station(s) and Transmission substation(s) shall be done every 36 months. Absent a specified initial performance date in the implementation plan, the Transmission Owner would have until 36 months

after the effective to establish its first list of Transmission station(s) and Transmission substation(s). Texas RE recommends the implementation plan specify the list shall be established by the effective date of the standard to avoid delaying compliance obligations an additional 36 months.	
Likes 0	
Dislikes 0	
Response	
Thank you for your comment. Please see revised Implementation Plan for clarification.	
Hillary Creurer - Allete - Minnesota Power, Inc. - 1	
Answer	No
Document Name	
Comment	
Minnesota Power supports EEI's comments.	
Likes 0	
Dislikes 0	
Response	
Thank you for your comments. Please see EEI comment response.	
Stephen Stafford - Stephen Stafford On Behalf of: Greg Davis, Georgia Transmission Corporation, 1; - Stephen Stafford	
Answer	No
Document Name	
Comment	

The construct of requiring the TO to perform analysis under R3 needs to be removed from this standard and addressed in TPL space. The 24 month implementation included in this plan is not sufficient to accomplish this.	
Likes 0	
Dislikes 0	
Response	
Thank you for your comment. Please see revised Implementation Plan for clarification.	
James Baldwin - James Baldwin On Behalf of: Matt Lewis, Lower Colorado River Authority, 5, 1; - James Baldwin	
Answer	No
Document Name	
Comment	
LCRA would like the Implementation Plan to include language addressing early adoption.	
Likes 0	
Dislikes 0	
Response	
Thank you for your comment. Please see revised Implementation Plan for clarification.	
Selene Willis - Edison International - Southern California Edison Company - 5	
Answer	No
Document Name	
Comment	

See comments submitted by the Edison Eclectic Institute	
Likes 0	
Dislikes 0	
Response	
Thank you for your comments. Please see EEI comment response.	
Dwanique Spiller - Berkshire Hathaway - NV Energy - 5	
Answer	No
Document Name	
Comment	
NV Energy supports the EEI response to this question. Additionally, the increased complexity of the standard will require entities to create new definitions and measurements for the new standard language in addition to implementing the practical ramifications of new study measurements. Current language also is suggestive of prior physical security assessments conducted with existing R4 and R5 standards may also need to be considered as data points in the CIP-014-4 R2 assessment requiring an amalgamation of transmission planning and physical security data to determine risk to the technical functionality and stability of substation equipment. The time necessary to implement is difficult to forecast at this juncture due to the potential for significant change.	
Likes 0	
Dislikes 0	
Response	
Thank you for your comment. Please see revised Implementation Plan for clarification.	
Amy Wesselkamper - PNM Resources - Public Service Company of New Mexico - 3	

Answer	No
Document Name	
Comment	
PNM and TNMP propose 36 calendar months from date of last assessment performed under CIP-014-3 R1 or 24 calendar months of the effective date whichever is longer.	
Likes 0	
Dislikes 0	
Response	
Thank you for your comment. Please see revised Implementation Plan for clarification.	
Jason Snodgrass - Jason Snodgrass On Behalf of: Katrina Lyons, Georgia System Operations Corporation, 3, 4; - Jason Snodgrass	
Answer	No
Document Name	
Comment	
GSOC supports comments provided by Georgia Transmission	
Likes 0	
Dislikes 0	
Response	
Thank you for your comments. Please see Georgia Transmission comment response.	
Mark Garza - FirstEnergy - FirstEnergy Corporation - 4, Group Name FE Voter	

Answer	Yes
Document Name	
Comment	
FirstEnergy has no objection to the Implementation Plan.	
Likes 0	
Dislikes 0	
Response	
Thank you for your support.	
Michael Dillard - Austin Energy - 5, Group Name Austin Energy	
Answer	Yes
Document Name	
Comment	
Austin Energy supports MRO's comments. Attached in Question 1.	
Likes 0	
Dislikes 0	
Response	
Thank you for your comments. Please see MRO NSRF comment response.	
Mark Flanary - Midwest Reliability Organization - 10	
Answer	Yes
Document Name	

Comment
The current Standard, CIP-014-4, Requirement 1, requires the risk performance to occur either every 30 or 60 calendar months. When the new Standard becomes effective Entities will be at different points in their cycles which could cause conflict or confusion. Consider providing guidance regarding how to handle situations where Entities are performing studies sufficiently out of cycle that a gap would be created, especially those Entities that are currently only required to perform the study every 60 months, or possibly providing an early adoption option.

Likes 0	
Dislikes 0	

Response
Thank you for your comment. Please see revised Implementation Plan for clarification.

Kristine Martz - Edison Electric Institute - NA - Not Applicable - NA - Not Applicable	
Answer	Yes
Document Name	

Comment
EEI supports a 24-calendar month implementation period but asks the drafting team to consider adding clarifying language to the implementation plan related to the implementation of periodic requirements. EEI interprets the draft Implementation Plan to mean that entities who must perform a risk assessment according to the requirements and timeframes in the currently enforceable CIP-014-3 after CIP-014-4 is approved but before the end of the 24-calendar month implementation period concludes, can perform the risk assessment under either version of the Standard. Subsequent risk assessments conducted after the end of the 24-calendar month implementation period would have to be performed in compliance with CIP-014-4. This is the preferred interpretation of the draft Implementation Plan, please add clarifying language to support this interpretation.

Likes 0	

Dislikes 0	
Response	
Thank you for your comment. The Drafting Team added “The initial risk assessment required by CIP-014-4, Requirement R5, must be completed on or before the effective date of the standard.” for clarification.	
Daniel Gacek - Exelon - 1, Group Name Exelon	
Answer	Yes
Document Name	
Comment	
Exelon support the EEI comment to clarify the latitude for entities to perform assessments based on CIP-014-3 during the implementation period.	
Likes 0	
Dislikes 0	
Response	
Thank you for your comments. Please see EEI comment response.	
Steven Rueckert - Western Electricity Coordinating Council - 10, Group Name WECC Entity Monitoring	
Answer	Yes
Document Name	
Comment	

Drawing a timeline for Implementation dates and ensuring future applicability is stated (Performance expectations) would benefit all implementation plans. The DT needs to consider “new” ownership (both new TOs or TOs subsumed by other existing TOs).	
Likes 0	
Dislikes 0	
Response	
Thank you for your comment. Please see revised Implementation Plan for clarification.	
Robert Follini - Avista - Avista Corporation - 3	
Answer	Yes
Document Name	
Comment	
Likes 0	
Dislikes 0	
Response	
Thank you for your support.	
James Keele - Entergy - 3	
Answer	Yes
Document Name	
Comment	
Likes 0	

Dislikes 0	
Response	
Thank you for your support.	
Richard Jackson - U.S. Bureau of Reclamation - 1	
Answer	Yes
Document Name	
Comment	
Likes 0	
Dislikes 0	
Response	
Thank you for your support.	
Matt Carden - Southern Company - Southern Company Services, Inc. - 1	
Answer	Yes
Document Name	
Comment	
Likes 0	
Dislikes 0	
Response	
Thank you for your support.	
Kevin Conway - Western Power Pool - 4	
Answer	Yes

Document Name	
Comment	
Likes 0	
Dislikes 0	
Response	
Thank you for your support.	
Jennie Wike - Jennie Wike On Behalf of: John Merrell, Tacoma Public Utilities (Tacoma, WA), 1, 4, 5, 6, 3; - Jennie Wike, Group Name Tacoma Power	
Answer	Yes
Document Name	
Comment	
Likes 0	
Dislikes 0	
Response	
Thank you for your support.	
Rebika Yitna - Rebika Yitna On Behalf of: Roger Brand, MEAG Power, 3, 1; - Rebika Yitna	
Answer	Yes
Document Name	
Comment	
Likes 0	

Dislikes 0	
Response	
Thank you for your support.	
Kelley Sargent - Puget Sound Energy, Inc. - 3	
Answer	Yes
Document Name	
Comment	
Likes 0	
Dislikes 0	
Response	
Thank you for your support.	
Lucinda Bradshaw - Oncor Electric Delivery - 1 - Texas RE	
Answer	Yes
Document Name	
Comment	
Likes 0	
Dislikes 0	
Response	
Thank you for your support.	
Alison Nickells - NiSource - Northern Indiana Public Service Co. - 1 - RF	
Answer	Yes

Document Name	
Comment	
Likes 0	
Dislikes 0	
Response	
Thank you for your support.	
Tyler Schwendiman - ReliabilityFirst - 10	
Answer	Yes
Document Name	
Comment	
Likes 0	
Dislikes 0	
Response	
Thank you for your support.	
Anna Martinson - MRO - 1,2,3,4,5,6 - MRO, Group Name MRO Group	
Answer	Yes
Document Name	
Comment	
Likes 1	Lincoln Electric System, 1, Johnson Josh
Dislikes 0	

Response	
Thank you for your support.	
Ben Hammer - Western Area Power Administration - 1	
Answer	Yes
Document Name	
Comment	
Likes 0	
Dislikes 0	
Response	
Thank you for your support.	
TRACEY JOHNSON - Southern Indiana Gas and Electric Co. - 3,5,6 - RF	
Answer	Yes
Document Name	
Comment	
Likes 0	
Dislikes 0	
Response	
Thank you for your support.	
Diana Aguas - CenterPoint Energy Houston Electric, LLC - 1 - Texas RE	
Answer	Yes
Document Name	

Comment	
Likes 0	
Dislikes 0	
Response	
Thank you for your support.	
Anne Kronshage - Public Utility District No. 1 of Chelan County - 6, Group Name Public Utility District No. 1 of Chelan County - Voting Group	
Answer	Yes
Document Name	
Comment	
Likes 0	
Dislikes 0	
Response	
Thank you for your support.	
Jennifer Bray - Arizona Electric Power Cooperative, Inc. - 1	
Answer	Yes
Document Name	
Comment	
Likes 0	
Dislikes 0	
Response	

Thank you for your support.	
Donna Wood - Tri-State G and T Association, Inc. - 1	
Answer	Yes
Document Name	
Comment	
Likes 0	
Dislikes 0	
Response	
Thank you for your support.	
Tim Kelley - Tim Kelley On Behalf of: Charles Norton, Sacramento Municipal Utility District, 3, 6, 4, 1, 5; Foung Mua, Sacramento Municipal Utility District, 3, 6, 4, 1, 5; Kevin Smith, Balancing Authority of Northern California, 1; Nicole Looney, Sacramento Municipal Utility District, 3, 6, 4, 1, 5; Ryder Couch, Sacramento Municipal Utility District, 3, 6, 4, 1, 5; Wei Shao, Sacramento Municipal Utility District, 3, 6, 4, 1, 5; - Tim Kelley, Group Name SMUD and BANC	
Answer	Yes
Document Name	
Comment	
Likes 0	
Dislikes 0	
Response	
Thank you for your support.	
Sean Bodkin - Dominion - Dominion Resources, Inc. - 6, Group Name Dominion	
Answer	Yes

Document Name	
Comment	
Likes 0	
Dislikes 0	
Response	
Thank you for your support.	
John Pearson - ISO New England, Inc. - 2	
Answer	Yes
Document Name	
Comment	
Likes 0	
Dislikes 0	
Response	
Thank you for your support.	
Andrew Smith - APS - Arizona Public Service Co. - 5	
Answer	Yes
Document Name	
Comment	
Likes 0	
Dislikes 0	

Response	
Thank you for your support.	
Jeffrey Streifling - NB Power Corporation - 1	
Answer	Yes
Document Name	
Comment	
Likes 0	
Dislikes 0	
Response	
Thank you for your support.	
Chantal Mazza - Chantal Mazza On Behalf of: Junji Yamaguchi, Hydro-Quebec (HQ), 1, 5; Nicolas Turcotte, Hydro-Quebec (HQ), 1, 5; - Chantal Mazza	
Answer	Yes
Document Name	
Comment	
Likes 0	
Dislikes 0	
Response	
Thank you for your support.	
Fon Hiew - NB Power Corporation - New Brunswick Power Transmission Corporation - 5	
Answer	Yes

Document Name	
Comment	
Likes 0	
Dislikes 0	
Response	
Thank you for your support.	
Andy Fuhrman - Andy Fuhrman On Behalf of: Theresa Allard, Minnkota Power Cooperative Inc., 1; - Andy Fuhrman	
Answer	Yes
Document Name	
Comment	
Likes 0	
Dislikes 0	
Response	
Thank you for your support.	
Denise Sanchez - Denise Sanchez On Behalf of: Diana Torres, Imperial Irrigation District, 1, 6, 5, 3; George Kirschner, Imperial Irrigation District, 1, 6, 5, 3; Jesus Sammy Alcaraz, Imperial Irrigation District, 1, 6, 5, 3; Tino Zaragoza, Imperial Irrigation District, 1, 6, 5, 3; - Denise Sanchez	
Answer	Yes
Document Name	
Comment	
Likes 0	

Dislikes 0	
Response	
Thank you for your support.	
Jesus Sammy Alcaraz - Imperial Irrigation District - 1	
Answer	Yes
Document Name	
Comment	
Likes 0	
Dislikes 0	
Response	
Thank you for your support.	
Ruida Shu - Northeast Power Coordinating Council - 1,2,3,4,5,6,7,8,9,10 - NPCC, Group Name NPCC RSC	
Answer	Yes
Document Name	
Comment	
Likes 0	
Dislikes 0	
Response	
Thank you for your support.	
Mike Magruder - Avista - Avista Corporation - 1,3,5	
Answer	Yes

Document Name	
Comment	
Likes 0	
Dislikes 0	
Response	
Thank you for your support.	
Michael Jang - Seattle City Light - 1	
Answer	Yes
Document Name	
Comment	
Likes 0	
Dislikes 0	
Response	
Thank you for your support.	
Chris Shultz - Seattle City Light - 5	
Answer	Yes
Document Name	
Comment	
Likes 0	
Dislikes 0	

Response	
Thank you for your support.	
Carver Powers - Utility Services, Inc. - 4	
Answer	Yes
Document Name	
Comment	
Likes 0	
Dislikes 0	
Response	
Thank you for your support.	
Robert Jones - Seattle City Light - 4	
Answer	Yes
Document Name	
Comment	
Likes 0	
Dislikes 0	
Response	
Thank you for your support.	
Daren Brubaker - Seattle City Light - 6	
Answer	Yes
Document Name	

Comment	
Likes 0	
Dislikes 0	
Response	
Thank you for your support.	
Zenon O'young-Chu - Seattle City Light - 3	
Answer	Yes
Document Name	
Comment	
Likes 0	
Dislikes 0	
Response	
Thank you for your support.	
Chris Wagner - Santee Cooper - 1, Group Name Santee Cooper	
Answer	Yes
Document Name	
Comment	
Likes 0	
Dislikes 0	
Response	

Thank you for your support.	
Jodirah Green - ACES Power Marketing - 1,3,4,5,6 - MRO,WECC,Texas RE,SERC,RF, Group Name ACES Collaborators	
Answer	Yes
Document Name	
Comment	
Likes 0	
Dislikes 0	
Response	
Thank you for your support.	
Richard Vendetti - NextEra Energy - 5	
Answer	
Document Name	
Comment	
NEE support's EEI comments: "EEI supports a 24-calendar month implementation period but asks the drafting team to consider adding clarifying language to the implementation plan related to the implementation of periodic requirements. EEI interprets the draft Implementation Plan to mean that entities who must perform a risk assessment according to the requirements and timeframes in the currently enforceable CIP-014-3 after CIP-014-4 is approved but before the end of the 24-calendar month implementation period concludes, can perform the risk assessment under either version of the Standard. Subsequent risk assessments conducted after the end of the 24-calendar month implementation period would have to be performed in compliance with CIP-014-4. This is the preferred interpretation of the draft Implementation Plan, please add clarifying language to support this interpretation. "	
Likes 0	
Dislikes 0	
Response	

Thank you for your comments. Please see EEI comment response.	
Devin Shines - PPL - Louisville Gas and Electric Co. - 1,3,5,6 - SERC,RF	
Answer	
Document Name	
Comment	
Louisville Gas & Electric and Kentucky Utilities support EEI's comments.	
Likes 0	
Dislikes 0	
Response	
Thank you for your comments. Please see EEI comment response.	
David Jendras Sr - Ameren - Ameren Services - 3	
Answer	
Document Name	
Comment	
Ameren supports EEI's comments on this project.	
Likes 0	
Dislikes 0	
Response	

Thank you for your comments. Please see EEI comment response.	
Stephanie Kenny - Edison International - Southern California Edison Company - 6	
Answer	
Document Name	
Comment	
See EEI comments	
Likes 0	
Dislikes 0	
Response	
Thank you for your comments. Please see EEI comment response.	
Gail Elliott - Gail Elliott On Behalf of: Michael Moltane, International Transmission Company Holdings Corporation, 1; - Gail Elliott	
Answer	
Document Name	
Comment	
ITC supports the EEI response	
Likes 0	
Dislikes 0	
Response	

Thank you for your comments. Please see EEI comment response.

8. Do you agree that CIP-014-4 is cost effective to address the reliability issue of physical security? If no, why not?	
Jodirah Green - ACES Power Marketing - 1,3,4,5,6 - MRO,WECC,Texas RE,SERC,RF, Group Name ACES Collaborators	
Answer	No
Document Name	
Comment	
Based on this draft and the recommended changes, it is not possible to understand the cost effectiveness.	
Likes 0	
Dislikes 0	
Response	
Thank you for the comment.	
Jason Snodgrass - Jason Snodgrass On Behalf of: Katrina Lyons, Georgia System Operations Corporation, 3, 4; - Jason Snodgrass	
Answer	No
Document Name	
Comment	
GSOC supports comments provided by Georgia Transmission	
Likes 0	
Dislikes 0	
Response	
Thank you for your comments.	

Gail Elliott - Gail Elliott On Behalf of: Michael Moltane, International Transmission Company Holdings Corporation, 1; - Gail Elliott	
Answer	No
Document Name	
Comment	
Comments: The proposed draft of CIP-014 is too prescriptive. This includes but is not limited to the fault types and items to be monitored. The list of items proposed to be used to identify close proximity is too prescriptive and would require a site visit to each applicable station to confirm if any of the proposed attributes are present. Mileage between the stations should be added to R2.1 and it should be modified to only require one or more attributes. For R2, the phrase 'of irrespective of ownership' should be removed.	
Likes 0	
Dislikes 0	
Response	
Thank you for your comments.	
Dwanique Spiller - Berkshire Hathaway - NV Energy - 5	
Answer	No
Document Name	
Comment	
Costs are difficult to forecast at this juncture.	
Likes 0	
Dislikes 0	
Response	
Thank you for the comment.	
Selene Willis - Edison International - Southern California Edison Company - 5	

Answer	No
Document Name	
Comment	
See comments submitted by the Edison Eclectic Institute	
Likes 0	
Dislikes 0	
Response	
Thank you for your comment.	
Jesus Sammy Alcaraz - Imperial Irrigation District - 1	
Answer	No
Document Name	
Comment	
The current proposed revision to CIP-014 is not deemed cost-effective. Managing the protection of neighboring facilities owned by different entities can be both costly and repetitive for any organization.	
Likes 0	
Dislikes 0	
Response	
Thank you for the comment.	
Denise Sanchez - Denise Sanchez On Behalf of: Diana Torres, Imperial Irrigation District, 1, 6, 5, 3; George Kirschner, Imperial Irrigation District, 1, 6, 5, 3; Jesus Sammy Alcaraz, Imperial Irrigation District, 1, 6, 5, 3; Tino Zaragoza, Imperial Irrigation District, 1, 6, 5, 3; - Denise Sanchez	

Answer	No
Document Name	
Comment	
The current proposed revision to CIP-014 is not deemed cost-effective. Managing the protection of neighboring facilities owned by different entities can be both costly and repetitive for any organization.	
Likes 0	
Dislikes 0	
Response	
Thank you for the comment.	
Stephen Stafford - Stephen Stafford On Behalf of: Greg Davis, Georgia Transmission Corporation, 1; - Stephen Stafford	
Answer	No
Document Name	
Comment	
The overall changes to this standard cannot easily be evaluated from a cost-effectiveness perspective. However, there are some areas of added cost that could be removed from the standard. For example, regarding requirement R6, if the assessment is conducted by a TP or PC using a more prescriptive CIP-014 (R3.1), then it should no longer be necessary to have an unaffiliated third-party verifier. This requirement appears to cause an undue burden/expense on the responsible entity with little to no gain. There are no other studies or assessments conducted by the TP or PC that require this oversight or gives reason to question the judgment of the TP or PC. The responsible entity will either conduct the assessment according to the standard or face the repercussions of non-compliance.	
Likes 0	
Dislikes 0	
Response	
Thank you for the comment.	

Hillary Creurer - Allete - Minnesota Power, Inc. - 1	
Answer	No
Document Name	
Comment	
Minnesota Power supports MRO-NSRF's comments.	
Likes 0	
Dislikes 0	
Response	
Thank you for your comment.	

Andy Fuhrman - Andy Fuhrman On Behalf of: Theresa Allard, Minnkota Power Cooperative Inc., 1; - Andy Fuhrman	
Answer	No
Document Name	
Comment	
Requiring the CIP-014 risk assessment every 36 months for utilities who have not previously identified any stations or substations as critical will not be cost effective; see MPC's comments in response to question 6.	
Likes 0	
Dislikes 0	
Response	
Thank you for the comment.	

Israel Perez - Israel Perez On Behalf of: Laura Somak, Salt River Project, 3, 6, 5, 1; Mathew Weber, Salt River Project, 3, 6, 5, 1; Thomas Johnson, Salt River Project, 3, 6, 5, 1; Timothy Singh, Salt River Project, 3, 6, 5, 1; - Israel Perez	
Answer	No
Document Name	
Comment	
SRP supports the MRO NSRF with Tacoma Power's comments.	
Likes 0	
Dislikes 0	
Response	
Thank you for your comments. Please see MRO NSRF comment response.	
Ellese Murphy - Duke Energy - 1,3,5,6 - Texas RE,SERC,RF	
Answer	No
Document Name	
Comment	
As proposed, the continued ambiguity in CIP-014 is not a cost-effective approach to identifying and implementing physical security improvements. Simulating implausible study scenarios is a foundational challenge to maintaining cost effectiveness.	
Likes 0	
Dislikes 0	
Response	
Thank you for the comment.	

Tim Kelley - Tim Kelley On Behalf of: Charles Norton, Sacramento Municipal Utility District, 3, 6, 4, 1, 5; Foung Mua, Sacramento Municipal Utility District, 3, 6, 4, 1, 5; Kevin Smith, Balancing Authority of Northern California, 1; Nicole Looney, Sacramento Municipal Utility District, 3, 6, 4, 1, 5; Ryder Couch, Sacramento Municipal Utility District, 3, 6, 4, 1, 5; Wei Shao, Sacramento Municipal Utility District, 3, 6, 4, 1, 5; - Tim Kelley, Group Name SMUD and BANC	
Answer	No
Document Name	
Comment	
This proposed version of CIP-014-4 is not cost effective as it would automatically designate any Transmission station(s) or Transmission substation(s) **in proximity** to a critical Transmission station(s) or Transmission substation(s) as critical, regardless of ownership, size, or ability to cause (by itself) instability, uncontrolled separation, or Cascading within an Interconnection. The changes proposed would commit small entities to implement expensive physical security plans that would not be required if they were not physically located in proximity to an existing critical Transmission station or Transmission substation. Also, the risk assessments required by CIP-014 are not quick and easy to do. Requirement R5 requires the risk assessment be performed every 36 calendar months regardless if there is no change in applicable Transmission station(s) and Transmission substation(s). CIP-014-4 should give some consideration and leeway to allow entities with no changes in their list(s) of applicable assets to perform risk assessments every 60 months.	
Likes 0	
Dislikes 0	
Response	
Thank you for your comments.	
Donna Wood - Tri-State G and T Association, Inc. - 1	
Answer	No
Document Name	
Comment	

Tri-State agrees with the MRO NSRF Submitted Comments	
Likes 0	
Dislikes 0	
Response	
Thank you for your comments. Please see MRO NSRF comment response.	
Jennifer Bray - Arizona Electric Power Cooperative, Inc. - 1	
Answer	No
Document Name	
Comment	
AEPC signed on to ACES comments below: Based on this draft and the recommended changes, it is not possible to understand the cost effectiveness.	
Likes 0	
Dislikes 0	
Response	
Thank you for your comments. Please see ACES comment response.	
Michael Dillard - Austin Energy - 5, Group Name Austin Energy	
Answer	No
Document Name	

Comment	
Austin Energy supports MRO's comments. Attached in Question 1.	
Likes 0	
Dislikes 0	
Response	
Thank you for your comments. Please see MRO NSRF comment response.	
Ben Hammer - Western Area Power Administration - 1	
Answer	No
Document Name	
Comment	
WAPA concurs with the comments provided by the MRO NSRF. In addition, the physical proximity criteria could result in a significant increase in the groups of substations evaluated, adding cost and time burdens. There is no technical justification or documented physical threat that supports the significant cost of evaluating and protecting these low-risk stations.	
Likes 0	
Dislikes 0	
Response	
Thank you for your comments. Please see MRO NSRF comment response.	
Karen Demos - NextEra Energy - Florida Power and Light Co. - 3	
Answer	No

Document Name	
Comment	
NextEra/FPL supports EEI's comments	
Likes 0	
Dislikes 0	
Response	
Thank you for your comments. Please see EEI comment response.	
Cain Braveheart - Bonneville Power Administration - 1,3,5,6 - WECC	
Answer	No
Document Name	
Comment	
BPA does not believe the standard, as is, is cost effective in addressing the reliability of physical security. The spectrum of sites is too broad. BPA believes there is high potential for sites to be identified on a CIP-014-4 list that would have little to no effect on the BES if they were disconnected from the grid. The standard, as is, allows sites with RAS capability to be listed as CIP-014, which mitigates an enormous amount of risk, some might argue all risk. The number of sites that could potentially be categorized as CIP-14 takes resources away from other sites along critical pathways, and sites that directly link to critical infrastructure. Additionally, day to day operations of upstream and downstream sites affect whether singular or multiple pieces of equipment in a site are critical.	
Likes 0	
Dislikes 0	
Response	
Thank you for your comments.	

Leshel Hutchings - AEP - 3	
Answer	No
Document Name	
Comment	
While this SAR focused on the R1 risk assessment, the most effective protection against all possible threat vectors is to plan redundancy into the Transmission system to remove single points of failure. Protecting individual stations against specific threats will always be less effective than Transmission build out. The standard should be revised to consider Transmission Planning mitigations rather than defaulting to adding physical security.	
Likes 0	
Dislikes 0	
Response	
Thank you for your comments.	
Alan Kloster - Alan Kloster On Behalf of: Jeremy Harris, Evergy, 3, 5, 1, 6; Kevin Frick, Evergy, 3, 5, 1, 6; Marcus Moor, Evergy, 3, 5, 1, 6; Tiffany Lake, Evergy, 3, 5, 1, 6; - Alan Kloster	
Answer	No
Document Name	
Comment	
Evergy supports and incorporates by reference the comments of the MRO NSRF for question #8.	
Likes 0	
Dislikes 0	
Response	
Thank you for your comments. Please see MRO NSRF comment response.	

Brian Millard - Tennessee Valley Authority - 1,3,5,6 - SERC, Group Name TVA RBB	
Answer	No
Document Name	
Comment	
CIP-014-4 does not prescribe cost effective remedies that functionally increase physical security and/or promote system reliability. Forcing entities to study one specific event in the standard, without consideration for precedent and probability, means that funds are either used to construct ineffective physical barriers or to implement costly transmission system upgrades for a system condition that will never occur. Entities should define and study events which have some probability of occurring on their system. These validated events can then serve as the basis to determine whether a physical barrier or transmission system upgrades are better suited for the safety and reliability of that entity's system.	
Likes 0	
Dislikes 0	
Response	
Thank you for your comments.	
Anna Martinson - MRO - 1,2,3,4,5,6 - MRO, Group Name MRO Group	
Answer	No
Document Name	
Comment	
It is too early in the process to effectively assess the cost considerations. However, these changes have the potential to add cost burden to smaller entities who fall under Attachment 1, Criterion 2.1, or those entities who previously completed studies every 60 months and now must conduct them every 36 months. In addition, the physical proximity criteria could result in a significant increase in the groups of	

substations evaluated, adding cost and time burdens. There is no technical justification or documented physical threat that supports the significant cost of evaluating and protecting these low-risk stations.	
Likes 1	Lincoln Electric System, 1, Johnson Josh
Dislikes 0	
Response	
Thank you for your comments.	
Alison Nickells - NiSource - Northern Indiana Public Service Co. - 1 - RF	
Answer	No
Document Name	
Comment	
The implementation of CIP-014-4 R2 and R3.5 as written (see comments above) will not be cost effective in terms of personnel and resources needed to address the physical security issues.	
Likes 0	
Dislikes 0	
Response	
Thank you for your comments.	
Lucinda Bradshaw - Oncor Electric Delivery - 1 - Texas RE	
Answer	No
Document Name	
Comment	
The cost impacts for the proposed changes to CIP-014-3 are expected to be minimal. Except as raised in the Comments above, the proposed changes add clarity to the current Standard to bring consistency to the risk assessment methodology, and clarify expectations for, effectively	

evaluating for instability, uncontrolled separation, and Cascading following a physical attack. The upper limit of cost added to entities is bounded due to no alteration of applicable substations potentially receiving security control upgrades. Rather, the cost incurred will be associated with the required additional study rigor, which again is anticipated to be relatively minimal.	
Likes 0	
Dislikes 0	
Response	
Thank you for your comments.	
Kelley Sargent - Puget Sound Energy, Inc. - 3	
Answer	No
Document Name	
Comment	
It is not clear to us if CIP-014-4 is cost effective to address reliability issue of physical security. Changes introduced in CIP-014-4 with respect to proximity criteria (R1 and R2) may result in additional stations becoming applicable for criticality assessment, thereby potentially increasing costs	
Likes 0	
Dislikes 0	
Response	
Thank you for your comments.	
Rebika Yitna - Rebika Yitna On Behalf of: Roger Brand, MEAG Power, 3, 1; - Rebika Yitna	
Answer	No
Document Name	
Comment	

Performing the risk assessment every 36 months rather than every 60 months does increase the cost for Transmission Owners internally and for the cost of using an unaffiliated 3rd party to verify the risk assessment. Also, it is expected with the newly added adjacent station(s)/substation(s) requirement that this will incur a cost burden and will not be cost effective, if/when additional station(s)/substation(s) are added to the applicable list.	
Likes 0	
Dislikes 0	
Response	
Thank you for your comments.	
Jennie Wike - Jennie Wike On Behalf of: John Merrell, Tacoma Public Utilities (Tacoma, WA), 1, 4, 5, 6, 3; - Jennie Wike, Group Name Tacoma Power	
Answer	No
Document Name	
Comment	
Tacoma Power supports the MRO NSRF comments, as follows. It is too early in the process to effectively assess the cost considerations. However, these changes have the potential to add cost burden to smaller entities who fall under Attachment 1, Criterion 2.1, or those entities who previously completed studies every 60 months and now must conduct them every 36 months. In addition, the physical proximity criteria could result in a significant increase in the groups of substations evaluated, adding cost and time burdens. There is no technical justification or documented physical threat that supports the significant cost of evaluating and protecting these low-risk stations.	
Likes 0	
Dislikes 0	
Response	

Thank you for your comments. Please see MRO NSRF comment response.	
Kevin Conway - Western Power Pool - 4	
Answer	No
Document Name	
Comment	
No cost/benefit study has been provided to help determine cost effectiveness of CIP-014. So far, the implementation of CIP-014 has been very expensive to small utilities and has resulted in no proven cost savings. Quite the opposite, smaller entities have had problems with the auditing of CIP-014 and auditor subjectivity to assessments and risk analysis. In some cases, auditors did not agree with mitigation efforts or the quality of the mitigation efforts. CIP-014, in general, has also resulted in significant costs to entities who have qualified affiliates who can perform these threat assessments without the need to hire unaffiliated third-parties. Seattle City and Los Angelos, to name two, have their own police departments, investigative units, but are still required to hire an un-affiliated third party to review CIP-014 methodologies and security plans. Typically, this review is done by a less qualified third-party contractor that charges significant consulting rates to rubber stamp these plans.	
Likes 0	
Dislikes 0	
Response	
Thank you for your comments.	
Matt Carden - Southern Company - Southern Company Services, Inc. - 1	
Answer	No
Document Name	
Comment	

Southern Company recognizes the financial impacts of performing the risk assessment every 36 months rather than 60 months for Transmission Owners that have not identified any Transmission stations or Transmission substations. This is magnified by the requirement to have an unaffiliated third party verify the risk assessment which does not provide a reliability benefit and no longer meets the original intent with the added specificity of the proposed standard.	
Likes 0	
Dislikes 0	
Response	
Thank you for your comments.	
James Keele - Entergy - 3	
Answer	No
Document Name	
Comment	
Don’t know what the “Cost” will be until the full scope of the requirement has been evaluated.	
Likes 0	
Dislikes 0	
Response	
Thank you for your comments.	
Sean Bodkin - Dominion - Dominion Resources, Inc. - 6, Group Name Dominion	
Answer	No
Document Name	
Comment	

Likes 0	
Dislikes 0	
Response	
Thank you for your comments.	
Robert Jones - Seattle City Light - 4	
Answer	Yes
Document Name	
Comment	
It is too early to determine cost effectiveness impact.	
Likes 0	
Dislikes 0	
Response	
Thank you for your comments.	
Chantal Mazza - Chantal Mazza On Behalf of: Junji Yamaguchi, Hydro-Quebec (HQ), 1, 5; Nicolas Turcotte, Hydro-Quebec (HQ), 1, 5; - Chantal Mazza	
Answer	Yes
Document Name	
Comment	
Depending on the power system, stability may or may not be the only determining factor when identifying critical elements. System performance assessments that aim at determining critical elements of a system can only be conducted by an entity that possess the overall view and knowledge of the system behavior. As such, the Transmission Planners (TP) and/or Planning coordinators (PC) are the best suited entities to determine the critical elements of the power system under their responsibility.	

We believe the application a performance-based methodology such as the NPCC A-10, as suggested by the drafting team, is a reliable, secure and cost-effective way to determine the scope of applicability where investments should be directed. However, the required efforts, technical knowledge and resources required to produce the resulting list of critical facilities are significant and cannot be justifiable, in our view, for the purposes of CIP-014 only, and can certainly not be performed by a transmission owner alone.

The current disparity among the different approaches currently used to establish the CIP-014 applicable facilities list assessment can be alleviated or practically eliminated by moving the responsibility of establishing the CIP-014 applicable facilities list to the Transmission Planners (TP) and/or Planning coordinators (PC).

The Transmission Planners (TP) and/or Planning coordinators (PC), should be required to provide a comprehensive methodology and uniform approach in determining the proper level of contingency applied to the system in their jurisdiction order to determine the CIP-014 applicable facilities list.

The Transmission Planners (TP) and/or Planning coordinators (PC) should be allowed to use past or related studies, using a uniform and justified contingency level to support the resulting facilities identified for applicability.

We suggest considering the following approach:

Keep the methodological approach of the current version of CIP-014 standard, where flexibility allows to account for disparity in determining factors associated power system architecture and behavior.

Make the Transmission Planners (TP) and/or Planning coordinators (PC) as the functional entities responsible for determining the list of critical facilities, instead of the current transmission owners.

Transfers the R1, R2 and R3 responsibility to the Transmission Planners (TP) and/or Planning coordinators (PC).

R3 should include a requirement for the Planning Coordinators to notify the transmission owners (TO) of any modifications to the CIP-014 applicable facilities list.

Likes 0	
Dislikes 0	

Response

Thank you for your comments.	
Dave Krueger - SERC Reliability Corporation - 10	
Answer	Yes
Document Name	
Comment	
Thank you for the chance to comment, SERC appreciates the complexity of the SDT's task of modifying multiple parts of such a high-profile and high-priority standard. While we generally agree CIP-014-4 is a cost effective approach, additional methods to improve its cost effectiveness are suggested in Item #Additional.A below under 'additional comments'	
Likes 0	
Dislikes 0	
Response	
Thank you for your comments.	
Mark Garza - FirstEnergy - FirstEnergy Corporation - 4, Group Name FE Voter	
Answer	Yes
Document Name	
Comment	
FirstEnergy has no issue with the cost effectiveness of this proposed standard.	
Likes 0	
Dislikes 0	
Response	
Thank you for your support.	
Jay Sethi - Manitoba Hydro - 1,3,5,6 - MRO, Group Name Manitoba Hydro Group	

Answer	Yes
Document Name	
Comment	
Manitoba Hydro notes that there is an opportunity to make the standard more efficient by clearly outlining when risk based studies are required and what types of studies are required.	
Likes 0	
Dislikes 0	
Response	
Thank you for your support.	
Zenon O'young-Chu - Seattle City Light - 3	
Answer	Yes
Document Name	
Comment	
Likes 0	
Dislikes 0	
Response	
Thank you for your support.	
Amy Wesselkamper - PNM Resources - Public Service Company of New Mexico - 3	
Answer	Yes
Document Name	
Comment	

Likes 0	
Dislikes 0	
Response	
Thank you for your support.	
Daren Brubaker - Seattle City Light - 6	
Answer	Yes
Document Name	
Comment	
Likes 0	
Dislikes 0	
Response	
Thank you for your support.	
Carver Powers - Utility Services, Inc. - 4	
Answer	Yes
Document Name	
Comment	
Likes 0	
Dislikes 0	
Response	
Thank you for your support.	

Chris Shultz - Seattle City Light - 5	
Answer	Yes
Document Name	
Comment	
Likes 0	
Dislikes 0	
Response	
Thank you for your support.	
Michael Jang - Seattle City Light - 1	
Answer	Yes
Document Name	
Comment	
Likes 0	
Dislikes 0	
Response	
Thank you for your support.	
Mike Magruder - Avista - Avista Corporation - 1,3,5	
Answer	Yes
Document Name	
Comment	

Likes 0	
Dislikes 0	
Response	
Thank you for your support.	
Ruida Shu - Northeast Power Coordinating Council - 1,2,3,4,5,6,7,8,9,10 - NPCC, Group Name NPCC RSC	
Answer	Yes
Document Name	
Comment	
Likes 0	
Dislikes 0	
Response	
Thank you for your support.	
James Baldwin - James Baldwin On Behalf of: Matt Lewis, Lower Colorado River Authority, 5, 1; - James Baldwin	
Answer	Yes
Document Name	
Comment	
Likes 0	
Dislikes 0	
Response	
Thank you for your support.	
Fon Hiew - NB Power Corporation - New Brunswick Power Transmission Corporation - 5	

Answer	Yes
Document Name	
Comment	
Likes 0	
Dislikes 0	
Response	
Thank you for your support.	
Jeffrey Streifling - NB Power Corporation - 1	
Answer	Yes
Document Name	
Comment	
Likes 0	
Dislikes 0	
Response	
Thank you for your support.	
Teresa Krabe - Lower Colorado River Authority - 5	
Answer	Yes
Document Name	
Comment	
Likes 0	

Dislikes 0	
Response	
Thank you for your support.	
Andrew Smith - APS - Arizona Public Service Co. - 5	
Answer	Yes
Document Name	
Comment	
Likes 0	
Dislikes 0	
Response	
Thank you for your support.	
Anne Kronshage - Public Utility District No. 1 of Chelan County - 6, Group Name Public Utility District No. 1 of Chelan County - Voting Group	
Answer	Yes
Document Name	
Comment	
Likes 0	
Dislikes 0	
Response	
Thank you for your support.	
Michele Shafer - New York State Electric & Gas (NYSEG) - 6	
Answer	Yes

Document Name	
Comment	
Likes 0	
Dislikes 0	
Response	
Thank you for your support.	
Michele Tondalo - United Illuminating Co. - 1	
Answer	Yes
Document Name	
Comment	
Likes 0	
Dislikes 0	
Response	
Thank you for your support.	
Tyler Schwendiman - ReliabilityFirst - 10	
Answer	Yes
Document Name	
Comment	
Likes 0	
Dislikes 0	

Response	
Thank you for your support.	
Richard Jackson - U.S. Bureau of Reclamation - 1	
Answer	Yes
Document Name	
Comment	
Likes 0	
Dislikes 0	
Response	
Thank you for your support.	
Robert Follini - Avista - Avista Corporation - 3	
Answer	Yes
Document Name	
Comment	
Likes 0	
Dislikes 0	
Response	
Thank you for your support.	
Steven Rueckert - Western Electricity Coordinating Council - 10, Group Name WECC Entity Monitoring	
Answer	
Document Name	

Comment	
No Comment	
Likes 0	
Dislikes 0	
Response	
Thank you for your support.	
David Jendras Sr - Ameren - Ameren Services - 3	
Answer	
Document Name	
Comment	
Ameren has no comment on cost effectiveness of the project to address the reliability issue.	
Likes 0	
Dislikes 0	
Response	
Thank you for your support.	
Mark Flanary - Midwest Reliability Organization - 10	
Answer	
Document Name	
Comment	
MRO is not in a position to assess the cost aspect.	

Likes 0	
Dislikes 0	
Response	
Thank you for your support.	
Devin Shines - PPL - Louisville Gas and Electric Co. - 1,3,5,6 - SERC,RF	
Answer	
Document Name	
Comment	
Louisville Gas & Electric and Kentucky Utilities support EEI's comments.	
Likes 0	
Dislikes 0	
Response	
Thank you for your comments. Please see EEI comment response.	
Rachel Schuldt - Black Hills Corporation - 6, Group Name Black Hills Corporation - All Segments	
Answer	
Document Name	
Comment	
Black Hills Corporation will not comment on cost effectiveness.	
Likes 0	
Dislikes 0	

Response	
Thank you for your support.	
Richard Vendetti - NextEra Energy - 5	
Answer	
Document Name	
Comment	
NEE does not comment on cost.	
Likes 0	
Dislikes 0	
Response	
Thank you for your support.	
TRACEY JOHNSON - Southern Indiana Gas and Electric Co. - 3,5,6 - RF	
Answer	
Document Name	
Comment	
No Comment	
Likes 0	
Dislikes 0	
Response	
Thank you for your support.	

9. Provide any additional comments for the standard drafting team to consider, if desired.	
Sean Steffensen - IDACORP - Idaho Power Company - 1	
Answer	
Document Name	
Comment	
- There were several references within the Violation Severity Levels section that don't seem to be pointing to the correct parts of the document. The Violation Severity Levels section needs to be reviewed to make sure it's pointing to the correct sections. - Idaho Power questions the requirement for proximity stations being studied as simultaneous SLG faults at the highest bus of both stations. We wonder if that will always be the right study for a physical attack on a station in proximity as it really depends on how proximity stations are defined and what the configuration of the station is in each instance.	
Likes 0	
Dislikes 0	
Response	
Thank you for your comment. Please see revised Standard and hopefully your concern has been addressed.	
Jessica Cordero - Unisource - Tucson Electric Power Co. - 1	
Answer	
Document Name	
Comment	
• There needs to be a process to remove stations from critical list if in future assessments it is deemed non-critical. • R6. Increase unaffiliated third party verification timeline from 90 calendar days to 180 calendar days to accommodate additional study work being required by CIP-014-4. • Clarify if a critical site is not re-evaluated per R3.2.2 and R5.1, is an evaluation of threats and vulnerabilities still required per new R8?	

Likes 0	
Dislikes 0	
Response	
Thank you for your comment. Please see revised Standard and hopefully your concern has been addressed.	
Kevin Conway - Western Power Pool - 4	
Answer	
Document Name	
Comment	
The Drafting Team should be commended for taking on the responsibility to rework CIP-014. It has a significant challenge ahead of it to ensure that a majority of entities agree with the changes. CIP-014 has had its problems, and the Drafting Team should ensure that not only is FERC's directive met for this standard, but that problems related to the original versions of CIP-014 are addressed. The Drafting Team should focus on auditable, enforceable and objective requirements that enhance reliability and do not result in compliance risk and costs to entities that is not commensurate to the overall risk the entity represents to the BPS.	
Likes 0	
Dislikes 0	
Response	
Thank you for the comment.	
Jennie Wike - Jennie Wike On Behalf of: John Merrell, Tacoma Public Utilities (Tacoma, WA), 1, 4, 5, 6, 3; - Jennie Wike, Group Name Tacoma Power	
Answer	
Document Name	
Comment	

Tacoma Power supports the MRO NSRF comments, as follows.

The MRO NSRF appreciates the work the SDT has done on this first draft of CIP-014-4 and offers the following additional comments.

First, the MRO NSRF recommends the SDT eliminate R6, the third party verification for the risk assessment. While this elimination is not explicitly mentioned in the SAR, it is directly tied to the changes proposed in the SAR. The purpose of the third party verification goes away with the increased prescriptiveness of the risk assessment proposed in R3. In addition, since the SAR indicates that industry was not implementing a consistent approach to the risk assessments, then that indicates the third party verifications were also proving to be of little value. This independent verification is a burdensome and costly endeavor that has not proven to be value-added. In many compliance monitoring activities, the verification Requirement is not audited or considered by monitoring personnel. Planning this task with eligible vendors requires significant work to coordinate and thousands of dollars to complete. Given that the verifications exist solely to offer feedback on an approach which will no longer be required with the increased specificity in R3, then their removal would eliminate what has become an unnecessary administrative burden.

Second, the MRO NSRF is concerned that if implemented, the expansion of CIP-014 beyond a single entity makes compliance almost unattainable. The remainder of the Requirements after the R5 Risk Assessment could require an entity to assess threats and vulnerabilities and protect BES Elements that is does not own or operate.

In regards to the Applicability changes, consider a small entity that has no current CIP-014 applicable stations, but has a station adjacent to another entity's larger Transmission Facility that is just under the Applicability threshold on its own. In this case the small entity would now have to create a list for R1 that includes that small station. Then both entities would confirm those same stations through R2 adjacency criteria (duplicative). They would eventually get to the R5 risk assessment performance requirement and conduct an overlapping risk assessment.

The small entity could end up with a list of stations whose loss could result in instability, uncontrolled separation, or Cascading within an Interconnection. The challenge with this situation is that the list will likely contain stations where the real risk is with the station that is not owned or operated by the entity performing the Risk Assessment.

What does this mean for compliance with CIP-014? What does the small entity do to comply with R6-R10? Will this small entity be responsible for assessing threats and vulnerabilities of the large Transmission facilities that they do not own or operate? Are they then responsible for providing security protections for these same stations?

The MRO NSRF recommends that prior to expanding the scope of CIP-014 to include these adjacent facilities either through the drafted 2.1 applicability criteria, or physical proximity criteria as part of a risk assessment methodology, that NERC solicit further information from the industry to determine if a significant risk exists. Similar to Project 2021-03 for TOCCs, it would be beneficial to have a study to analyze the number of impacted sites, the aggregate risk of not including for these locations, and conclusions as to whether regulatory action is needed to address the residual risk.

Finally, the MRO NSRF also recommends the following adjustments to the proposed VSL tables:

1. VSL table “CIP-014-3” should be “CIP-014-4”

2. The VSLs as written are overly prescriptive and don’t reflect reliability risks. For example:

a. For R4 – Request that the drafting team review the number of VSL against the reliability risk of R4. There seem to be too many VSL compared to the actual reliability risks.

b. For R5 – Suggest that lower VSL should be for an assessment performed between 36 and 42 months and severe if greater than 42 months (assumed not at all). Every TO by now has done more than one assessment. Typically the system doesn’t change much over a 3 year time span so that any critical facilities previously identified wouldn’t change. Delaying an assessment a few months is not a severe detriment to reliability.

Likes 0	
Dislikes 0	
Response	
Thank you for your comment. Please see revised Standard and hopefully your concern has been addressed.	
Jay Sethi - Manitoba Hydro - 1,3,5,6 - MRO, Group Name Manitoba Hydro Group	
Answer	
Document Name	
Comment	

MH believes the third-party verification requirement is unnecessary for this standard, so it is recommended that SDT consider removing it. Instead, the standard can be updated to share the assessment reports with adjacent TOs identified as having stations in close vicinity or jointly owned facilities.

Likes 0	
Dislikes 0	

Response

Thank you for your comment. Please see revised Standard and hopefully your concern has been addressed.

Lidija Efremova - Lidija Efremova On Behalf of: Emma Halilovic, Hydro One Networks, Inc., 1; - Lidija Efremova

Answer	
Document Name	

Comment

We see that NERC SDT is targeting to mimic the NPCC A-10 Identification methodology which is system performance-based. Simulated system performance-based identification methodology is not well suited to this Physical Security standard; it is out of scope.

There is great merit for NERC to review transition to using performance-based methodology for identifying critical elements of the bulk power system. Please keep in mind that the Reliability Coordinators and Transmission Planners are best suited to run these types of studies because have they have broad oversight of their entire footprint, which is needed for this type of determination. Certainly, individual TO's do not have sufficient tools and knowledge to run NPCC A-10 type studies. This said, we believe there is great merit in NERC considering simulated system performance-based critical infrastructure identification methodology. This identification could flow smoothly into TLP-001 analysis.

For this physical security standard, a practical option for the SDT to consider for physical criticality determination is:

- Start with NERC BES as defined considering inclusions and exclusions
- Then filter by those facilities used in an IROL definition (can be provided by the RC or TP)
- Add in tie-lines that meet criteria: e.g. used for import/export and relied upon to balance area footprint during a significant loss of generation or loss of load event (can be provided by the RC or TP)
- Add in critical stations hubs that supply a significant/critical regional load pocket (can be provided by the RC or TP or TO)

- Add in stations directly connected to nuclear facilities – the station(s) that the nuclear facility generates into before flow disperses
- Then filter by physical threats as this is a physical security standard.

The idea here is that a TO would use readily available information for R1 & R3.

In alternative:

Suggestion to reword 3.1.1 to not be prescriptive on 12 individual study items in the standard. Something along the line of, " ...TO must demonstrate suitable dynamic studies to identify critical stations. It would then be up to the TO to have documentation to pass to auditor which will comprise of dynamic studies, and/or justification why certain ones were omitted.

Likes 0	
Dislikes 0	

Response

Thank you for your comment. Please see revised Standard and hopefully your concern has been addressed.

Kelley Sargent - Puget Sound Energy, Inc. - 3

Answer	
Document Name	

Comment

It is not clear the type of events CIP-014-4 intends to address that can simultaneously impact 2 or more stations. The standard depends on physical security measures to mitigate such events, however mitigation to the extent may not be feasible nor cost effective.

Likes 0	
Dislikes 0	

Response

Thank you for your comment. Please see revised Standard and hopefully your concern has been addressed.

Lucinda Bradshaw - Oncor Electric Delivery - 1 - Texas RE

Answer	
Document Name	
Comment	
N/A	
Likes 0	
Dislikes 0	
Response	
Thank you for your support.	
Alison Nickells - NiSource - Northern Indiana Public Service Co. - 1 - RF	
Answer	
Document Name	
Comment	
NIPSCO’s position is that the changes to the CIP-014 standard as written improve the Physical Security Standard. However, the current draft would implement many unknown and potentially costly measures to include transmission substations that are not owned by NIPSCO but within "line of sight" of NIPSCO's applicable transmission stations/substations.	
Likes 0	
Dislikes 0	
Response	
Thank you for your comment. Please see revised Standard and hopefully your concern has been addressed.	
Tyler Schwendiman - ReliabilityFirst - 10	
Answer	
Document Name	

Comment
For R6.1, is the intent to review the risk assessment was performed accurately? If yes, what would a planning-based risk assessment (and having planning experience) have to do with evaluating security measures implemented at the substation to mitigate the risk? For 6.1.2, what would be an adequate level of transmission planning or analysis experience. This seems ambiguous. For 6.2 and 6.3, again, it seems that verification efforts of the risk assessment (planning oriented) and physical security recommendations are being mixed here. In general, consideration needs to be given for “smoking hole” attacks (in which three-phase faults would represent) cannot be completely mitigated through physical security upgrades. In reality, physical security measures will more likely delay, detect, and improve response time for these attacks. What criteria should be used to measure improved physical security posture? In addition, the attack vector of transmission elements outside of the substation would remain vulnerable even after substation physical enhancements are made.

Likes 0	
Dislikes 0	

Response
Outside of scope.

Mark Garza - FirstEnergy - FirstEnergy Corporation - 4, Group Name FE Voter	
Answer	
Document Name	

Comment
While previously addressed, FirstEnergy is including the following requests: Requirement 4 states “owned Transmission station(s) and Transmission substation(s) shall coordinate to determine and identify each entity’s individual and joint responsibilities for performing any required risk assessments…” but the VSL for this requirement states “ The Transmission

Owner performed a risk assessment but…" with no mention of coordination. FirstEnergy requests synching the intent of the Requirement with the VSL. Further, the VSL for R5 appears to be a copy-and-paste of R5. FirstEnergy requests edits to synchronize the intent of R5 with the VSL.	
Likes 0	
Dislikes 0	
Response	
Thank you for your comment. Please see revised Standard and hopefully your concern has been addressed.	
Anna Martinson - MRO - 1,2,3,4,5,6 - MRO, Group Name MRO Group	
Answer	
Document Name	
Comment	
The MRO NSRF appreciates the work the SDT has done on this first draft of CIP-014-4 and offers the following additional comments. First, the MRO NSRF recommends the SDT eliminate R6, the third party verification for the risk assessment. While this elimination is not explicitly mentioned in the SAR, it is directly tied to the changes proposed in the SAR. The purpose of the third party verification goes away with the increased prescriptiveness of the risk assessment proposed in R3. In addition, since the SAR indicates that industry was not implementing a consistent approach to the risk assessments, then that indicates the third party verifications were also proving to be of little value. This independent verification is a burdensome and costly endeavor that has not proven to be value-added. In many compliance monitoring activities, the verification Requirement is not audited or considered by monitoring personnel. Planning this task with eligible vendors requires significant work to coordinate and thousands of dollars to complete. Given that the verifications exist solely to offer feedback on an approach which will no longer be required with the increased specificity in R3, then their removal would eliminate what has become an unnecessary administrative burden.	

Second, the MRO NSRF is concerned that if implemented, the expansion of CIP-014 beyond a single entity makes compliance almost unattainable. The remainder of the Requirements after the R5 Risk Assessment could require an entity to assess threats and vulnerabilities and protect BES Elements that is does not own or operate.

In regards to the Applicability changes, consider a small entity that has no current CIP-014 applicable stations, but has a station adjacent to another entity's larger Transmission Facility that is just under the Applicability threshold on its own. In this case the small entity would now have to create a list for R1 that includes that small station. Then both entities would confirm those same stations through R2 adjacency criteria (duplicative). They would eventually get to the R5 risk assessment performance requirement and conduct an overlapping risk assessment.

The small entity could end up with a list of stations whose loss could result in instability, uncontrolled separation, or Cascading within an Interconnection. The challenge with this situation is that the list will likely contain stations where the real risk is with the station that is not owned or operated by the entity performing the Risk Assessment.

What does this mean for compliance with CIP-014? What does the small entity do to comply with R6-R10? Will this small entity be responsible for assessing threats and vulnerabilities of the large Transmission facilities that they do not own or operate? Are they then responsible for providing security protections for these same stations?

The MRO NSRF recommends that prior to expanding the scope of CIP-014 to include these adjacent facilities either through the drafted 2.1 applicability criteria, or physical proximity criteria as part of a risk assessment methodology, that NERC solicit further information from the industry to determine if a significant risk exists. Similar to Project 2021-03 for TOCCs, it would be beneficial to have a study to

analyze the number of impacted sites, the aggregate risk of not including for these locations, and conclusions as to whether regulatory action is needed to address the residual risk.

Finally, the MRO NSRF also recommends the following adjustments to the proposed VSL tables:

1. VSL table "CIP-014-3" should be "CIP-014-4"

2. The VSLs as written are overly prescriptive and don't reflect reliability risks. For example:

a. For R4 – Request that the drafting team review the number of VSL against the reliability risk of R4. There seem to be too many VSL compared to the actual reliability risks. b. For R5 – Suggest that lower VSL should be for an assessment performed between 36 and 42 months and severe if greater than 42 months (assumed not at all). Every TO by now has done more than one assessment. Typically the system doesn't change much over a 3 year time span so that any critical facilities previously identified wouldn't change. Delaying an assessment a few months is not a severe detriment to reliability.	
Likes 1	Lincoln Electric System, 1, Johnson Josh
Dislikes 0	
Response	
Thank you for your comment. Please see revised Standard and hopefully your concern has been addressed.	
Brian Millard - Tennessee Valley Authority - 1,3,5,6 - SERC, Group Name TVA RBB	
Answer	
Document Name	
Comment	
Regarding requirements R2 and R3, proximity and event definition should be foundationally based in reality and practicality. Functional Entities should have the latitude to determine potential events that may occur on their system or in their area. Furthermore, it is generally beyond the skillset of planning engineers, who complete CIP-014-4 studies, to determine what types of attack may impact one or multiple stations. Risk assessments, completed by security professionals, based on things like location, historical events, and current threats should be utilized to define event scope instead of planning engineers. Using this methodology would further drive the accuracy and applicability of CIP-014-4 event simulations.	
Likes 0	
Dislikes 0	
Response	
Thank you for your comment. Please see revised Standard and hopefully your concern has been addressed.	

Alan Kloster - Alan Kloster On Behalf of: Jeremy Harris, Evergy, 3, 5, 1, 6; Kevin Frick, Evergy, 3, 5, 1, 6; Marcus Moor, Evergy, 3, 5, 1, 6; Tiffany Lake, Evergy, 3, 5, 1, 6; - Alan Kloster	
Answer	
Document Name	
Comment	
Evergy supports and incorporates by reference the comments of the Edison Electric Insitute (EEI) and MRO NSRF for question #9.	
Likes 0	
Dislikes 0	
Response	
Thank you for your comments. Please see MRO NSRF and EEI comment responses.	
Leshel Hutchings - AEP - 3	
Answer	
Document Name	
Comment	
There is a typo in R8 Section 8.3 which could be corrected in this revision. “Electricity Sector Information Sharing and Analysis Center (ES-ISAC)” should say “Electricity Information Sharing and Analysis Center (E-ISAC)”. AEP’s comments to the draft requirement changes would necessitate the need to change the VSL table.	
Likes 0	
Dislikes 0	
Response	

Thank you for your comment.	
Cain Braveheart - Bonneville Power Administration - 1,3,5,6 - WECC	
Answer	
Document Name	
Comment	
It appears the revisions do not address the fundamental flaw with CIP-014: there is no language to guide or require entities to frame the study that is used as the risk assessment around a specific physical security scenario or threat vector(s). Being vector-agnostic is failing to bridge the divide between the different missions of transmission planners and physical security experts. Uncertainty remains about what is supposed to be studied ("smoking hole dilemma"), especially when compared with considerations of how likely or realistic certain threat vectors appear to be. BPA believes there is still bias in the language toward adding physical security treatments to sites that will forever stay on the list, when system redesign, presence of Remedial Action Schemes, etc. could be used to reduce the criticality of a site. BPA believes there is still subjectivity due to the lack of a clear and precise definition for "critical" and "primary control center". The revisions appear to be moving in the direction of increasing the number of CIP-014 sites, when the original intent of the standard was to have a very small number of sites.	
Likes 0	
Dislikes 0	
Response	
Thank you for your comment. Please see revised Standard and hopefully your concern has been addressed.	
Karen Demos - NextEra Energy - Florida Power and Light Co. - 3	
Answer	
Document Name	
Comment	

NextEra/FPL supports EEI's comments	
Likes 0	
Dislikes 0	
Response	
Thank you for your comments. Please see EEI comment response.	
Ben Hammer - Western Area Power Administration - 1	
Answer	
Document Name	
Comment	

WAPA appreciates the work the SDT has done on this first draft of CIP-014-4. WAPA concurs with the additional comments provided by the MRO NSRF and offers the following additional comments.

The “clean” version of the drafted Standard posted on the project page is different than the “redline” version. Compare R6 as the example between the two posted versions.

Additionally, WAPA strongly recommends the SDT eliminate R6, the third party verification for the risk assessment. WAPA agrees with the reasons already proposed by the MRO NSRF, but also because it holds the entity responsible for the actions of another organization, and creates the risk of non-compliances when a separate reviewer fails to complete their work on time.

While this elimination is not explicitly mentioned in the SAR, it is directly tied to the changes proposed in the SAR. The purpose of the third party verification goes away with the increased prescriptiveness of the risk assessment proposed in R3. In addition, since the SAR indicates that industry was not implementing a consistent approach to the risk assessments, then that indicates the third party verifications were also proving to be of little value. This independent verification is a burdensome and costly endeavor that has not proven to be value-added. Planning this task with eligible vendors requires significant work to coordinate and thousands of dollars to complete. Given that the

verifications exist solely to offer feedback on an approach which will no longer be required with the increased specificity in R3, then their removal would eliminate what has become an unnecessary administrative burden.	
Likes 0	
Dislikes 0	
Response	
Thank you for your comment. Please see revised Standard and hopefully your concern has been addressed.	
Michael Dillard - Austin Energy - 5, Group Name Austin Energy	
Answer	
Document Name	
Comment	
Austin Energy supports MRO's comments. Attached in Question 1.	
Likes 0	
Dislikes 0	
Response	
Thank you for your comments. Please see MRO NSRF comment response.	
Anne Kronshage - Public Utility District No. 1 of Chelan County - 6, Group Name Public Utility District No. 1 of Chelan County - Voting Group	
Answer	
Document Name	
Comment	
As noted above multiple times, NERC may wish to consider how to provide an incentive to utilities to think of ways to get stations de-classified. In TPL-001-5, the concept of Corrective Action Plan is used; in the current form of CIP-014, the corrective action plan does	

not contemplate the potential of system-level fixes (such as modifications to far-end protection), but instead jumps to the assumption that physical security is the only solution and the system is 'stuck' with the instability, cascading, or uncontrolled separation risk. This is not necessarily the case.

The layout of the proposed steady state and stability requirements read 'clunky'; in TPL-001-5, R3 clearly addresses the steady state simulation requirements and simulation expectations; R4 clearly addresses the stability simulation requirements and simulation expectations. This separation in TPL-001-5's presentation allowed for greater clarity, whereas the current proposed draft of CIP-014 combines its steady state and stability requirements in overlapping sections of R3.

The requirement under the proposed R3.1.2 "Technically supported thresholds for acceptable load loss and acceptable generation loss" is something that has been a regulatory discussion for years, with not a lot of firm guidance or clarity, such as a 1000 MW bright-line. The current CIP-014 has not provided much in the way of example or guidance for utilities to clarify what is expected here either, neither in the proposed revision itself or in the technical rationale (a little bit of guidance is noted here, but this is not sufficient). These would likely be big numbers for a large load-serving utility; conversely, these would be small numbers for a small utility. "Whose load or generation" becomes a further point, as does steady state vs. stability model load loss (such as composite load model load drop in WECC), consequential vs. non-consequential loss, and customer counts vs load loss (for example, 1000 MW at peak load is likely a different level of customer impact than loss of 1000 MW during an off-peak condition). As such, this language will likely result in furthering the spread of differences for methods and assumptions used in CIP-014 assessments. Since the proposed requirement and its outcome doesn't appear to support the Project Scope objectives and these methodology differences will exist regardless of this language, it is recommended R3.1.2 be removed.

Likes 0	
Dislikes 0	

Response

Thank you for your comment. Please see revised Standard and hopefully your concern has been addressed.

Jennifer Bray - Arizona Electric Power Cooperative, Inc. - 1

Answer	
Document Name	

Comment

Thank you for the opportunity to comment.	
Likes 0	
Dislikes 0	
Response	
Thank you for your comment. Please see revised Standard and hopefully your concern has been addressed.	
Richard Vendetti - NextEra Energy - 5	
Answer	
Document Name	
Comment	
NEE support's EEI comments: "For efficiency and to avoid revising CIP-014-4 as part of project 2021-03, please consider coordinating with project 2021-03 to edit the IROL wording in CIP-014 now as part of project 2023-06. Please consider revising Attachment 1, item 3: "3. Transmission Facilities at a single station or substation location that are identified by its Reliability Coordinator, Planning Coordinator, or Transmission Planner as critical to the derivation of Interconnection Reliability Operating Limits (IROLs) and their associated contingencies." to read as, "3. Transmission Facilities at a single station or substation location that are identified by its Planning Coordinator or Transmission Planner, per its Planning Assessment of the Near-Term Transmission Planning Horizon as a Facility that if lost or degraded are expected to result in instances of instability, Cascading, or uncontrolled separation that adversely impacts the reliability of the Bulk Electric System for a planning event."	
Likes 0	
Dislikes 0	
Response	
Thank you for your comments. Please see EEI comment response.	
Donna Wood - Tri-State G and T Association, Inc. - 1	

Answer	
Document Name	
Comment	
Tri-State agrees with the MRO NSRF Submitted Comments under Additional Comments	
Likes 0	
Dislikes 0	
Response	
Thank you for your comments. Please see MRO NSRF comment response.	

Rachel Schuldt - Black Hills Corporation - 6, Group Name Black Hills Corporation - All Segments

Answer	
Document Name	
Comment	

Black Hills Corporation agrees with the following EEI comment:

For efficiency and to avoid revising CIP-014-4 as part of project 2021-03, please consider coordinating with project 2021-03 to edit the IROL wording in CIP-014 now as part of project 2023-06. Please consider revising Attachment 1, item 3: “3. Transmission Facilities at a single station or substation location that are identified by its Reliability Coordinator, Planning Coordinator, or Transmission Planner as critical to the derivation of Interconnection Reliability Operating Limits (IROLs) and their associated contingencies.” to read as, “3. Transmission Facilities at a single station or substation location that are identified by its Planning Coordinator or Transmission Planner, per its Planning Assessment of the Near-Term Transmission Planning Horizon as a Facility that if lost or degraded are expected to result in instances of instability, Cascading, or uncontrolled separation that adversely impacts the reliability of the Bulk Electric System for a planning event.”

Likes 0	
Dislikes 0	
Response	
Thank you for your comments. Please see EEI comment response.	
Ellese Murphy - Duke Energy - 1,3,5,6 - Texas RE,SERC,RF	
Answer	
Document Name	
Comment	
Duke Energy supports EEI's additional comments.	
Likes 0	
Dislikes 0	
Response	
Thank you for your comments. Please see EEI comment response.	
Sean Bodkin - Dominion - Dominion Resources, Inc. - 6, Group Name Dominion	
Answer	
Document Name	
Comment	

Dominion Energy supports EEI's additional comments. Also, Dominion Energy is of the opinion that resources to gather the required information and to perform the required studies are highly specialized and not readily available. Internal expertise continues to be a challenge to obtain, and vendors are very limited in their abilities and bandwidth.	
Likes 0	
Dislikes 0	
Response	
Thank you for the comment.	
Joshua London - Eversource Energy - 1, Group Name Eversource	
Answer	
Document Name	
Comment	

R6.2: Eversource requests R6.2 allow for 90 days instead of 60 so proper work can be completed. With a more detailed analysis being required, there is a higher chance of disagreement with our third party reviewer, requiring more time needed for response.

R7: Eversource requests the removal of "is not under the operational control of the Transmission Owner " in R7. Regardless if the facility is owned by the company that operates the facility, the Transmission Operator should be notified as the group doing the CIP-014 assessment and the group operating the system should be required to communicate.

Technical Rationale Comments:

Requirement 2 – Eversource has concern with the phrase "certain amount of discretion and flexibility is intended to be allowable for each Transmission Owner" as the "flexibility" often leads to disagreement with an auditor if the interpretations do not much either.

Requirement 3, Part 3.1 – Rationale spelled wrong. Also, Eversource agrees there should be flexibility around load loss as it will vary within the interconnection, but the system frequency allowed should be standardized throughout the interconnection.

Requirement R3, Part 3.3 – Rationale does not line up with what is in standard, appears to be missing.

Requirement R3, Part 3.4 – Why not a three-phase fault at all transmission buses within a single Transmission station or Transmission substation?

Requirement R3, Part 3.5 – Why not a three-phase fault at all transmission buses within a single Transmission station or Transmission substation?

Requirement R3, Part 3.6 - Eversource fully supports this.

Requirement R3, Part 3.6.1 – Eversource fully supports this.

Likes 0	
Dislikes 0	

Response
R6 and R7 changes are out of scope

Andrew Smith - APS - Arizona Public Service Co. - 5	
Answer	
Document Name	
Comment	
AZPS seeks to understand the complete responsibilities for transmission stations within proximity of an applicable station which has been deemed critical under the risk assessment. As written, the draft could be interpreted to mean that entities must conduct the risk assessment on stations which are not owned or operated by the entity. It is not clear what responsibilities the entity has when the substation is not jointly owned. The draft team should clarify all considerations for a transmission station identified as “within proximity” but not owned by the entity.	
Likes 0	
Dislikes 0	
Response	
Thank you for your comment. Please see revised Standard and hopefully your concern has been addressed.	
Devin Shines - PPL - Louisville Gas and Electric Co. - 1,3,5,6 - SERC,RF	
Answer	
Document Name	
Comment	
Louisville Gas & Electric and Kentucky Utilities support EEI's comments.	
Likes 0	
Dislikes 0	
Response	
Thank you for your comments. Please see EEI comment response.	

Dave Krueger - SERC Reliability Corporation - 10	
Answer	
Document Name	
Comment	

Thank you for the chance to comment, SERC appreciates the complexity of the SDT's task of modifying multiple parts of such a high-profile standard.

· Item #Additional.A: Consider editing requirement CIP-014-4 R6.2 indicating that the details of the R2 proximity criteria/analysis, R3 risk assessment methodology, and R5 risk assessment completion be provided to the third-party verifier. Given the new breadth of components in R1, R2, R3, and R5, these materials would undoubtedly be needed for the Third-Party Verifier(s) to fully review the Responsible Entity's performance. This aids in fulfillment of SAR Scope Item #3, "Assure the adequacy and consistent implementation of technically supported justification for study decisions" as the R2 Third Party Verifier is the timely and primary control to provide feedback that R1-R5 implementation was consistent, and if any recommendations or changes bear consideration.

· Item #Additional.B Consider editing requirement CIP-014-4 R6.4 to indicate that the R2 proximity criteria, R3 risk assessment methodology, and R5 risk assessment completion be made available to the personnel performing the R8 threat/vulnerability evaluation, and the R9 security/resiliency plans without running afoul of information protections. Security and resilience measures will be planned, prioritized, and implemented with higher effectiveness and precision if the specific knowledge of the types of contingencies, types of cases/BES situations studied, and the results of what specific methodology results failed are provided. This will enable the personnel performing R8 and R9 to better design the security and resiliency measures for specific threat/vulnerability scenarios which would specifically lead to the 'Evil 3', instead of assumed or generically considered threat/vulnerability exploitation. It should be made clear in either the requirement language or implementation guidance that sharing this information in order to develop mission and cost-effective resiliency and security measures is expressly permitted under R6.4 (and R9.4). Doing this will reduce the deployment of generic and less-effective measures which do not effectively reduce or otherwise mitigate the risk of instability, uncontrolled separation, or Cascading due to the loss of critical sites. This would aid in fulfillment of SAR Scope Item #4, "Clarify what study scenario(s) and other study assumptions are appropriate and reasonable considering the intent of CIP-014-3 and the potential range of issues during a physical attack. Simulations should incorporate the loss of station elements without local system protection."

Likes 0	
Dislikes 0	
Response	
Outside of scope	
Jeffrey Streifling - NB Power Corporation - 1	
Answer	
Document Name	
Comment	
Request R6.2 allow for 90 days instead of 60 so proper work can be completed. With a more detailed analysis being required, there is a higher chance of disagreement with a third party reviewer, requiring more time needed for response.	
Likes 0	
Dislikes 0	
Response	
Outside of scope	
Mark Flanary - Midwest Reliability Organization - 10	
Answer	
Document Name	
Comment	
The Technical Rationale has a heading of "PRC-002-4 Technical Rational" when opened in Adobe Acrobat. In the clean version of the draft CIP-014-4 R6.1 appears to be a copy of CIP-014-3 R5.1. The redline version of CIP-014-4 R6.1 appears correct	

Likes 0	
Dislikes 0	
Response	
Thank you for your comment. Please see revised Standard and hopefully your concern has been addressed.	
Chantal Mazza - Chantal Mazza On Behalf of: Junji Yamaguchi, Hydro-Quebec (HQ), 1, 5; Nicolas Turcotte, Hydro-Quebec (HQ), 1, 5; - Chantal Mazza	
Answer	
Document Name	
Comment	
Request R6.2 allow for 90 days instead of 60 so proper work can be completed. With a more detailed analysis being required, there is a higher chance of disagreement with a third party reviewer, requiring more time needed for response.	
Likes 0	
Dislikes 0	
Response	
Outside of scope	
Fon Hiew - NB Power Corporation - New Brunswick Power Transmission Corporation - 5	
Answer	
Document Name	
Comment	
Request R6.2 allow for 90 days instead of 60 so proper work can be completed. With a more detailed analysis being required, there is a higher chance of disagreement with a third party reviewer, requiring more time needed for response.	

Likes 0	
Dislikes 0	
Response	
Outside of scope	
Hillary Creurer - Allete - Minnesota Power, Inc. - 1	
Answer	
Document Name	
Comment	
Minnesota Power supports MRO-NSRF and EEI’s comments.	
Likes 0	
Dislikes 0	
Response	
Thank you for your comments. Please see MRO NSRF and EEI comment responses.	
David Jendras Sr - Ameren - Ameren Services - 3	
Answer	
Document Name	
Comment	
Ameren supports EEI's comments on this project.	
Likes 0	
Dislikes 0	

Response
Thank you for your comments. Please see EEI comment response.

Kristine Martz - Edison Electric Institute - NA - Not Applicable - NA - Not Applicable	
Answer	
Document Name	
Comment	
For efficiency and to avoid revising CIP-014-4 as part of project 2021-03, please consider coordinating with project 2021-03 to edit the IROL wording in CIP-014 now as part of project 2023-06. Please consider revising Attachment 1, item 3: “3. Transmission Facilities at a single station or substation location that are identified by its Reliability Coordinator, Planning Coordinator, or Transmission Planner as critical to the derivation of Interconnection Reliability Operating Limits (IROLs) and their associated contingencies.” to read as, “3. Transmission Facilities at a single station or substation location that are identified by its Planning Coordinator or Transmission Planner, per its Planning Assessment of the Near-Term Transmission Planning Horizon as a Facility that if lost or degraded are expected to result in instances of instability, Cascading, or uncontrolled separation that adversely impacts the reliability of the Bulk Electric System for a planning event.”	
Likes 0	
Dislikes 0	

Response
Thank you for your comment. Please see revised Standard and hopefully your concern has been addressed.

Stephen Stafford - Stephen Stafford On Behalf of: Greg Davis, Georgia Transmission Corporation, 1; - Stephen Stafford	
Answer	

Document Name	
Comment	
• The analysis criteria and the expectation for the TO to perform an analysis needs to be removed from this standard and addressed in TPL space. This and the inclusion of more prescriptive study criteria (in the correct standard category) mitigates the need for third-party verification of the analysis. • Currently the third-party verifications referenced in the standard are not subject to NERC requirements. An assessment could receive favorable third-party verification but still not meet the requirements of the standard in the opinion of a regulatory entity. • R8 – R10 may require modification in response to stated comments on R3 & R5.	
Likes 0	
Dislikes 0	
Response	
Thank you for your comment. Please see revised Standard and hopefully your concern has been addressed.	
Selene Willis - Edison International - Southern California Edison Company - 5	
Answer	
Document Name	
Comment	
See comments submitted by the Edison Eclectic Institute	
Likes 0	
Dislikes 0	
Response	
Thank you for your comments. Please see EEI comment response.	
Ruida Shu - Northeast Power Coordinating Council - 1,2,3,4,5,6,7,8,9,10 - NPCC, Group Name NPCC RSC	

Answer	
Document Name	
Comment	
Request R6.2 allow for 90 days instead of 60 so proper work can be completed. With a more detailed analysis being required, there is a higher chance of disagreement with a third party reviewer, requiring more time needed for response.	
Likes 0	
Dislikes 0	
Response	
Outside of scope	
Daniel Gacek - Exelon - 1, Group Name Exelon	
Answer	
Document Name	
Comment	
For efficiency and to avoid revising CIP-014-4 as part of project 2021-03, please consider coordinating with project 2021-03 to edit the IROL wording in CIP-014 now as part of project 2023-06.	
Likes 0	
Dislikes 0	
Response	
Thank you for your comment. Please see revised Standard and hopefully your concern has been addressed.	
Dwanique Spiller - Berkshire Hathaway - NV Energy - 5	
Answer	
Document Name	

Comment	
NV Energy supports EEI's additional comment response.	
Likes 0	
Dislikes 0	
Response	
Thank you for your comments. Please see EEI comment response.	
Bobbi Welch - Midcontinent ISO, Inc. - 2	
Answer	
Document Name	
Comment	
MISO notes that expanding R2 to encompass "Transmission substation(s) in proximity to those identified in Requirement R1, *irrespective of ownership*" introduces a timing issue that must be addressed in verifying CIP-014 risk assessments. As CIP-014 requires risk assessment verifications to be complete within 90 calendar days (pursuant to CIP-014, Part 6.2), MISO asks the SDT to establish a timeline by which entities owning proximate substations are required to respond to communications from Transmission Owners and unaffiliated third parties performing risk assessments. This will ensure information is provided in a timely manner as at least some owners of proximate substations will not otherwise be subject to CIP-014.	
Likes 0	
Dislikes 0	
Response	
Thank you for your comment. Please see revised Standard and hopefully your concern has been addressed.	
Michael Jang - Seattle City Light - 1	

Answer	
Document Name	
Comment	
In agreement and support of SCL SME's additional comments: With the changes to R3 providing more explicit direction on how to perform the risk assessment, 3rd party verification seems unnecessary, so R6 can be eliminated. It wasn't clear that the 3rd party verifications were effective in the first place. If R6 is maintained, the first sentence of R6.1 and of R6.3 are incomplete and should be rewritten.	
Likes 0	
Dislikes 0	
Response	
Out of scope	
Chris Shultz - Seattle City Light - 5	
Answer	
Document Name	
Comment	
With the changes to R3 providing more explicit direction on how to perform the risk assessment, 3rd party verification seems unnecessary, so R6 can be eliminated. It wasn't clear that the 3rd party verifications were effective in the first place. If R6 is maintained, the first sentence of R6.1 and of R6.3 are incomplete and should be rewritten.	
Likes 0	
Dislikes 0	
Response	
Out of scope	

Stephanie Kenny - Edison International - Southern California Edison Company - 6	
Answer	
Document Name	
Comment	
See EEI comments	
Likes 0	
Dislikes 0	
Response	
Thank you for your comments. Please see EEI comment response.	

Robert Jones - Seattle City Light - 4	
Answer	
Document Name	
Comment	
With the changes to R3 providing more explicit direction on how to perform the risk assessment, 3rd party verification seems unnecessary, so R6 can be eliminated. It wasn't clear that the 3rd party verifications were effective in the first place. If R6 is maintained, the first sentence of R6.1 and of R6.3 are incomplete and should be rewritten.	
Likes 0	
Dislikes 0	
Response	
Out of scope	

Daren Brubaker - Seattle City Light - 6	
Answer	
Document Name	
Comment	
With the changes to R3 providing more explicit direction on how to perform the risk assessment, 3rd party verification seems unnecessary, so R6 can be eliminated. It wasn't clear that the 3rd party verifications were effective in the first place. If R6 is maintained, the first sentence of R6.1 and of R6.3 are incomplete and should be rewritten.	
Likes 0	
Dislikes 0	
Response	
Out of scope	
Gail Elliott - Gail Elliott On Behalf of: Michael Moltane, International Transmission Company Holdings Corporation, 1; - Gail Elliott	
Answer	
Document Name	
Comment	
ITC supports both the additional comments of EEI and MRO NSRF.	
Likes 0	
Dislikes 0	
Response	
Thank you for your comments. Please see MRO NSRF and EEI comment responses.	

Amy Wesselkamper - PNM Resources - Public Service Company of New Mexico - 3	
Answer	
Document Name	
Comment	

PNM and TNMP support EEI additional comments, noted again here. Additionally, a **SAR** should be considered to revise CIP-014-4 R6 to allow additional time for third party verification, especially if prescriptive study criteria are not included in the standard.

"For efficiency and to avoid revising CIP-014-4 as part of project 2021-03, please consider coordinating with project 2021-03 to edit the IROL wording in CIP-014 now as part of project 2023-06. Please consider revising Attachment 1, item 3: "3. Transmission Facilities at a single station or substation location that are identified by its Reliability Coordinator, Planning Coordinator, or Transmission Planner as critical to the derivation of Interconnection Reliability Operating Limits (IROLs) and their associated contingencies." to read as, "3. Transmission Facilities at a single station or substation location that are identified by its Planning Coordinator or Transmission Planner, per its Planning Assessment of the Near-Term Transmission Planning Horizon as a Facility that if lost or degraded are expected to result in instances of instability, Cascading, or uncontrolled separation that adversely impacts the reliability of the Bulk Electric System for a planning event."

Likes 0	
Dislikes 0	
Response	

Thank you for the comment.

Zenon O'young-Chu - Seattle City Light - 3	
Answer	
Document Name	
Comment	

With the changes to R3 providing more explicit direction on how to perform the risk assessment, 3rd party verification seems unnecessary, so R6 can be eliminated. It wasn't clear that the 3rd party verifications were effective in the first place. If R6 is maintained, the first sentence of R6.1 and of R6.3 are incomplete and should be rewritten.	
Likes 0	
Dislikes 0	
Response	
Outside of scope.	
Jason Snodgrass - Jason Snodgrass On Behalf of: Katrina Lyons, Georgia System Operations Corporation, 3, 4; - Jason Snodgrass	
Answer	
Document Name	
Comment	
GSOC supports comments provided by Georgia Transmission	
Likes 0	
Dislikes 0	
Response	
Thank you for your comments. Please see Georgia Transmission comment response.	
Steven Rueckert - Western Electricity Coordinating Council - 10, Group Name WECC Entity Monitoring	
Answer	
Document Name	

Comment
WECC voted negative on the non-binding poll for various reasons identified in the comments below. WECC appreciates the efforts to improve reliability and security by the changes proposed. Although the changes may be considered significant (both the original language and language proposed), the risk is real and the threat vectors continue to increase. WECC supports the direction but clarity around the language will help ensure consistent application of the Requirements. We propose that the language regarding "line of sight" and "ease of access to a common public roadway" should provide more detailed and specific guidelines to clearly define how entities can achieve security AND compliance. Providing expectations and requirements will not only help entities understand the necessary steps and measures needed to meet the Standard but also ensure consistency across CMEP teams. This approach will help avoid the development of varying audit approaches and interpretations, leading to a more uniform and fair audit. Reliability and security should be considered foundational attributes of the electrical grid and achieving the level commensurate with the risk is probably viewed differently across the industry. Events that may be avoided through effective risk mitigation should be a goal of this project. Capitalize “control center” in the Purpose statement. Extra period at end of Requirement R2 needs removed. Requirement 6 in the red-lined version is different than the Requirement 6 language in the clean version. The clean version has additional language in Requirement 6.1 and 6.3 that was moved to Requirement 9. Updated Requirement 6.2 needs to change “R1” to “R5” in first sentence referencing the performance of the risk assessment. Should “Control Center” be added to Requirement 6.2 and 6.3 as the deletion/addition of a Transmission station or Transmission substation could affect Control Center identification? Consider adding “as critical” after “its identification” to provide clarity in Requirement 6.3. Measure M6 should only reference R5 identification and not any additional modifications as the third-party is only verifying the R5 risk assessment and not the list of Transmission station(s) and Transmission substation(s). If the intent is to verify all applicable Transmission station(s) and Transmission substation(s) called out in R1, R2 (unless subsumed- see previous comments), and R4 then language needs added to Requirement R6 to allow such a change. R7 needs to capitalize “control center” as discussed previously. Use NERC defined terms for clarity and consistency. Requirement R7.1 should only reference R5 not “R1, R2, R3, R4 and R5” as R5 is where Transmission station(s) and Transmission substation(s) are identified (suggest adding “as critical” as well here to be clear) through the risk assessment being verified. Requirement R7.1 incorrectly references R1 (should be R5) and incorrect changed R2 to R5 when that reference should be R6 (verification by third-party). Capitalize “control center” in R8. Need to correctly reference E-ISAC by changing “the Electricity Sector Information Sharing and Analysis Center (ES-ISAC” to “the Electricity Information Sharing and Analysis Center (E-ISAC)” in R8. Capitalize “control center” in R9. Measure M9 needs to reference Requirement R9 not Requirement R6.

Evidence retention should mirror the periodicity or go beyond the periodicity of the Requirement language (e.g. 36 calendar months not 3 years).

VSL header needs to change reference to CIP-014-4 not "-3". VSL language for R1 reflects "calendar months" but Requirement R1 language simply says "months". VSL language for R1 misses the inclusion of R4 in terms of applicable Transmission station(s) and Transmission substation(s). Furthermore, the VSL should not delve into a percentage missing as the only way an auditor could determine that is a complete list of all Transmission station(s) or Transmission substation(s) be provided (including those in close proximity per R2 and "jointly owned" in R4). The percentage basically indicates a reperformance by CMEP staff in the determination of applicable Transmission station(s) and Transmission substation(s). RSAW may provide an internal control question to have the entity show how it ensures inclusion. Certainly the entity should have a list of all Transmission stations and Transmission substations with an inventory of fully owned and those stations where partial ownership exists. As for the proximity of substations, clear indication of why they were included should be maintained. Verification of proximity from a compliance perspective may require review of internal controls coupled with site visits or use of Google Earth (as an example).

High VSL for R2 should not use the term "insufficient". There are 3 criterion listed in R2 so consider indicating the missing of one of the three required criterion as basis for High VSL.

VSLs for Requirement R3 may need to change if formatting suggestion is applied (note R3.3. says "Analysis of fault simulations, as follows: "and R3.4 and R3.5 should be sub bullets of R3.3).

R4 VSLs do not correspond with Requirement R4 language (no risk assessment performed in R4, no subparts of R4). Should reference the failure to coordinate at least once every 36 months in some manner. Consider keeping the first part of each VSL but replace "performed a risk assessment" to "did not coordinate to determine and identify responsibilities associated with required risk assessments but did so after ….." Additionally, R4 is not bulleted so unclear what the DT is trying to reference here for R4.

R5 VSLs may need to address references to R3 parts if formatting is corrected in R3. Additionally, R4 is not bulleted so unclear what the DT is trying to reference here for R4.

R6 VSLs need some adjustments. Consider the following:

R6 Lower VSL-"The Transmission Owner had an unaffiliated third party verify the risk assessment performed under Requirement R4R5, but did so in more than 90 calendar days, but less than or equal to 100 calendar days following completion of Requirement R4R5. OR The Transmission Owner had an unaffiliated third party verify the risk assessment performed under Requirement R4R5 and modified or

documented the technical basis for not modifying its identification under Requirement R4R5 as required by Part 6.35.2 but did so more than 60 calendar days and less than or equal to 70 calendar days from completion of the third party verification."

Moderate VSL--"The Transmission Owner had an unaffiliated third party verify the risk assessment performed under Requirement R4R5, but did so in more than 100 calendar days, but less than or equal to 110 calendar days following completion of Requirement R4R5. OR The Transmission Owner had an unaffiliated third party verify the risk assessment performed under Requirement R4R5 and modified or documented the technical basis for not modifying its identification under Requirement R4R5 as required by Part 6.35.2, but did so more than 70 calendar days and less than or equal to 80 calendar days from completion of the third party verification."

High VSL-"The Transmission Owner had an unaffiliated third party verify the risk assessment performed under Requirement R4R5, but did so in more than 110 calendar days, but less than or equal to 120 calendar days following completion of Requirement R4R5. OR The Transmission Owner had an unaffiliated third party verify the risk assessment performed under Requirement R4R5 and modified or documented the technical basis for not modifying its identification under Requirement R4 as required by Part 6.35.2, but did so more than 80 calendar days from completion of the third party verification. OR The Transmission Owner had an unaffiliated third party verify the risk assessment performed under Requirement R4R5, but failed to modify or document the technical basis for not modifying its identification under R4R5 as required by Part 6.35.2."

Severe VSL-"The Transmission Owner had an unaffiliated third party verify the risk assessment performed under Requirement R4R5, but did so more than 120 calendar days following completion of Requirement R4R5. OR The Transmission Owner failed to have an unaffiliated third party verify the risk assessment performed under Requirement R4R5. OR The Transmission Owner had an unaffiliated third party verify the risk assessment performed under Requirement R4R5, but failed to implement procedures for protecting information per Part 6.45.2."

R7 VSLs should reference R7 not R6 (R6 shown as replacement for R3) or alternatively say "…as identified in Requirement R5 but…" or alternatively say "…as verified in Requirement R6.." instead of "as specified in Requirement R63 but.." Additionally, later in the VSLs, change the Requirement R1 to R5 (versus R4).

R8 VSLs-Responsible Entity is not defined. Understand the desire to avoid repeating TO and/or TOP. Consider lower-casing the use of the term in the VSLs. Change the Requirement R1 reference to R5 (versus R4). The VSLs should reference Parts 8.1 through 8.3 versus 7.1 through 7.3.

R9 VSLs- -Responsible Entity is not defined. Understand the desire to avoid repeating TO and/or TOP. Consider lower-casing the use of the term in the VSLs. Change the Requirement R1 reference to R5 (missed it completely in the Lower VSL while others reference Requirement R4.) It appears that the development and implementation should not occur until after verification in Requirement R6 versus Requirement R5 as referenced in all the VSLs. Change the "verified according to Requirement" to Requirement R6 versus R5 (all VSLs). Requirement R8 references should be changed to Requirement R9. Just to be clear the Technical Rational should indicate the TO is responsible for the Transmission station(s) and Transmission substation(s) while the TOP is responsible for the Control Center—VSLs language could confuse registered entities.

Requirement R9 should consider "initiated" versus "implemented" as "implemented" and "executed" may be considered synonymous.

R10 VSLs Requirement R7 and R8 references need updated to reflect Requirement language. Change R7 to R8 and R8 to R9 as the evaluation is performed in R8 and the security plan is developed in R9 (all VSLs). Requirement R9.3 reference should change to Requirement R10.3 (all VSLs). Requirement R9.4 reference should be changed to Requirement R10.4 (Severe VSL).

Likes 0	
Dislikes 0	

Response

Thank you for your comment. Please see revised Standard and hopefully your concern has been addressed.

Chris Wagner - Santee Cooper - 1, Group Name Santee Cooper

Answer	
Document Name	

Comment

The Standard or technical rationale document should provide more clarity on the type of physical attack event. This would help determine what type of physical security is needed to prevent/mitigate the risk of the event. More clarification on the type of event would help entities define what type of fault event to use for the risk assessment as well as potential physical security actions if needed should a station or stations be identified in the risk assessment and require additional protection.

Likes 0	
Dislikes 0	
Response	
Thank you for your comment. Please see revised Standard and hopefully your concern has been addressed.	
Jodirah Green - ACES Power Marketing - 1,3,4,5,6 - MRO,WECC,Texas RE,SERC,RF, Group Name ACES Collaborators	
Answer	
Document Name	
Comment	
We would like to thank the SDT for their hard work and allowing us to comment.	
Likes 0	
Dislikes 0	
Response	
Thank you for the comment and support.	

Standard Development Timeline

This section is maintained by the drafting team during the development of the standard and will be removed when the standard is adopted by the NERC Board of Trustees (Board).

Description of Current Draft

CIP-014-4 is posted for a 45-day formal comment period with additional ballot.

Completed Actions	Date
Standards Committee approved Standard Authorization Request (SAR) for posting	June 21, 2023
SAR posted for comment	July 26, 2023 – August 24, 2023
Accepted Revised SAR	January 17, 2024

Anticipated Actions	Date
45-day formal or informal comment period with ballot	May 20, 2024 – July 3, 2024
45-day formal or informal comment period with additional ballot	September 23, 2024 – November 6, 2024
10-day final ballot	February 3, 2025 – February 12, 2025
Board adoption	April 4, 2025

New or Modified Term(s) Used in NERC Reliability Standards

This section includes all new or modified terms used in the proposed standard that will be included in the *Glossary of Terms Used in NERC Reliability Standards* upon applicable regulatory approval. Terms used in the proposed standard that are already defined and are not being modified can be found in the *Glossary of Terms Used in NERC Reliability Standards*. The new or revised terms listed below will be presented for approval with the proposed standard. Upon Board adoption, this section will be removed.

Term(s):

None.

A. Introduction

1. **Title:** Physical Security

2. **Number:** CIP-014-4

3. **Purpose:** To identify and protect Transmission stations and Transmission substations, and their associated primary control centers, that if rendered inoperable or damaged as a result of a physical attack could result in instability, uncontrolled separation, or Cascading within an Interconnection.

4. **Applicability:**

   4.1. Functional Entities:

   4.1.1. Transmission Owner that owns Transmission station(s) or Transmission substation(s) that meet the applicability criteria of Attachment 1.

   4.1.2. Transmission Operator.

   Exemption: Facilities in a "protected area," as defined in 10 C.F.R. § 73.2, within the scope of a security plan approved or accepted by the Nuclear Regulatory Commission are not subject to this Standard; or Facilities within the scope of a security plan approved or accepted by the Canadian Nuclear Safety Commission are not subject to this Reliability Standard.

5. **Effective Date:** See Implementation Plan for CIP-014-4.

B. Requirements and Measures

R1. Each Transmission Owner, at least once every 36 calendar months, shall document a list of applicable Transmission station(s) and Transmission substation(s) meeting any of the criteria in Attachment 1 that are either existing or planned to be in service within 36 calendar months. *[Violation Risk Factor: High; Time-Horizon: Long-term Planning]*

M1. Examples of evidence may include, but are not limited to, dated written or electronic documentation of the Transmission stations and Transmission substations (existing and those planned to be in service within 36 calendar months) that meet any of the criteria in Attachment 1.

R2. Each Transmission Owner shall have documented criteria to determine those Transmission station(s) and Transmission substation(s), irrespective of ownership, within ½ mile of an applicable Transmission station or Transmission substation documented in Requirement R1, that could be impacted by a single physical attack. The criteria shall address at a minimum the following: *[Violation Risk Factor: Medium; Time-Horizon: Long-term Planning]*

2.1. Line of sight between multiple Transmission station(s) or Transmission substation(s) from a single location without obstruction.

2.2. Ease of access from a common roadway that exists between multiple Transmission station(s) or Transmission substation(s).

M2. Examples of evidence may include, but are not limited to, dated written or electronic documentation of the criteria established in Requirement R2.

R3. Each Transmission Owner shall have a documented risk assessment methodology, including criteria for steady-state and dynamic simulations, for evaluating the loss due to a physical attack of each applicable Transmission station(s) and Transmission substation(s) documented in Requirement R1 and Transmission substation(s) or Transmission station(s) determined to be in proximity per Requirement R2. The methodology shall include, at a minimum, the following: *[Violation Risk Factor: High; Time-Horizon: Long-term Planning]*

3.1. Technically supported thresholds and rationale for determining the amount of acceptable load loss, the amount of acceptable generation loss, post-event response, and any additional considerations recognized as resulting in instability, uncontrolled separation, or Cascading within an Interconnection. The technical rationale shall include:

3.1.1. Steady-state and dynamic system response to events that could lead to load loss, generation loss, and other unacceptable post-event response within an Interconnection.

3.2. Steady-state and dynamic simulations shall be performed under System conditions that are more likely to contribute to instability, uncontrolled separation, or Cascading within an Interconnection.

3.2.1. The simulations shall include the removal of all Elements that Protection Systems and other controls are expected to automatically disconnect for each event.

3.2.2. If steady-state and dynamic simulations each show acceptable system response but additional Elements trip during the dynamic simulation of an event, then additional steady-state analysis including any tripped Elements from the dynamic simulations shall be conducted.

3.3. For each applicable Transmission station or Transmission substation listed in accordance with Requirement R1, analysis shall include a Fault at the applicable Transmission station or Transmission substation and each Transmission station or Transmission substation identified in accordance with Requirement R2 as being in proximity to the applicable Transmission station or Transmission substation.

3.4. Fault simulations that assume the loss of communication and Protection System at the Transmission station(s) or Transmission substation(s) studied under Requirement R3, Parts 3.2 and 3.3.

3.4.1. Delayed (remote) clearing times shall be used unless otherwise technically substantiated.

3.4.2. Actual or more conservative estimates of clearing times shall be used unless otherwise technically substantiated.

M3. Each Transmission Owner shall provide dated evidence, such as electronic or hard copies, of risk assessment methodology satisfying Requirement R3.

R4. Each Transmission Owner with applicable Transmission station(s) and Transmission substation(s) per Requirement R1 owned by multiple Transmission Owners shall coordinate with those Transmission Owners to determine and document their individual and joint responsibilities for performing any required risk assessments per Requirement R5. *[VRF: Medium; Time-Horizon: Operations Planning, Long-term Planning]*

M4. Examples of acceptable evidence may include, but are not limited to, dated documentation, such as meeting minutes, agreements, and email correspondence, that identifies that agreement has been reached on individual and joint responsibilities for performing the required risk assessments.

R5. At least once every 36 calendar months, each Transmission Owner shall perform a risk assessment to identify Transmission station(s) and Transmission substation(s) that if rendered inoperable or damaged as a result of a physical attack could result in

instability, uncontrolled separation, or Cascading within an Interconnection, using the methodology established in Requirement R3 including any Transmission station(s) and Transmission substation(s) identified in accordance with documentation established per Requirement R4. *[VRF: High; Time-Horizon: Operations Planning, Long-term Planning]*

5.1. A Transmission station or Transmission substation identified in dynamic or steady-state simulations as causing instability, uncontrolled separation, or Cascading within an Interconnection when rendered inoperable or damaged as a result of a physical attack does not require any additional simulations during the current risk assessment.

5.2. The Transmission Owner shall identify the primary control center that operationally controls each Transmission station or Transmission substation identified in the Requirement R5 risk assessment.

M5. Examples of acceptable evidence may include, but are not limited to, dated written or electronic documentation of the risk assessment satisfying Requirement R5. For Requirement R5, Part 5.2, examples of acceptable evidence may include, but are not limited to, dated written or electronic documentation of the identification of the primary control center that operationally controls each identified Transmission station or Transmission substation.

R6. Each Transmission Owner shall have an unaffiliated third party verify the risk assessment performed under Requirement R5. The verification may occur concurrent with or after the risk assessment performed under Requirement R5. *[VRF: High; Time-Horizon: Long-term Planning]*

6.1. Each Transmission Owner shall select an unaffiliated verifying entity that is either:

6.1.1. A registered Planning Coordinator, Transmission Planner, or Reliability Coordinator; or

6.1.2. An entity that has transmission planning or analysis experience.

6.2. The unaffiliated third party verification shall verify the Transmission Owner's risk assessment performed under Requirement R5, which may include recommendations for the addition or deletion of a Transmission station(s) or Transmission substation(s). The Transmission Owner shall ensure the verification is completed within 90 calendar days following the completion of the Requirement R5 risk assessment.

6.3. If the unaffiliated verifying entity recommends that the Transmission Owner add a Transmission station(s) or Transmission substation(s) to, or remove a Transmission station(s) or Transmission substation(s) from, its identification under Requirement R5, the Transmission Owner shall either, within 60 calendar days of

completion of the verification, for each recommended addition or removal of a Transmission station or Transmission substation:

6.3.1. Modify its identification under Requirement R5 consistent with the recommendation; or

6.3.2. Document the technical basis for not modifying the identification in accordance with the recommendation.

6.4. Each Transmission Owner shall implement procedures, such as the use of non-disclosure agreements, for protecting sensitive or confidential information made available to the unaffiliated third party verifier and to protect or exempt sensitive or confidential information developed pursuant to this Reliability Standard from public disclosure.

M6. Examples of acceptable evidence may include, but are not limited to, dated written or electronic documentation that the Transmission Owner completed an unaffiliated third party verification of the Requirement R5 risk assessment and satisfied all of the applicable provisions of Requirement R6, including, if applicable, documenting the technical basis for not modifying the identification in Requirements R1, R2, R3, R4, and R5 as specified under Part 6.3. Additionally, examples of evidence may include, but are not limited to, written or electronic documentation of procedures to protect information under Part 6.4.

R7. For a primary control center(s) identified by the Transmission Owner according to Requirement R5, Part 5.2 that a) operationally controls an identified Transmission station or Transmission substation verified according to Requirement R5, and b) is not under the operational control of the Transmission Owner: the Transmission Owner shall, within seven calendar days following completion of Requirement R5, notify the Transmission Operator that has operational control of the primary control center of such identification and the date of completion of Requirement R5 . *[VRF: Medium; Time-Horizon: Long-term Planning]*

7.1. If a Transmission station or Transmission substation previously identified under Requirements R1, R2, R3, R4, and R5 and verified according to Requirement R6 is removed from the identification during a subsequent risk assessment performed according to Requirement R5 or a verification according to Requirement R6, then the Transmission Owner shall, within seven calendar days following the verification or the subsequent risk assessment, notify the Transmission Operator that has operational control of the primary control center of the removal.

M7. Examples of acceptable evidence may include, but are not limited to, written or electronic notifications or communications that the Transmission Owner notified each Transmission Operator, as applicable, according to Requirement R7.

R8. Each Transmission Owner that identified a Transmission station, Transmission substation, or a primary control center in Requirement R5 and verified according to

Requirement R6, and each Transmission Operator notified by a Transmission Owner according to Requirement R7, shall conduct an evaluation of the potential threats and vulnerabilities of a physical attack to each of their respective Transmission station(s), Transmission substation(s), and primary control center(s) identified in Requirement R5 and verified according to Requirement R6. The evaluation shall consider the following: *[VRF: Medium; Time-Horizon: Operations Planning, Long-term Planning]*

8.1. Unique characteristics of the identified and verified Transmission station(s), Transmission substation(s), and primary control center(s);

8.2. Prior history of attack on similar facilities taking into account the frequency, geographic proximity, and severity of past physical security related events; and

8.3. Intelligence or threat warnings received from sources such as law enforcement, the Electric Reliability Organization (ERO), the Electricity Sector Information Sharing and Analysis Center (ES-ISAC), U.S. federal and/or Canadian governmental agencies, or their successors.

M8. Examples of evidence may include, but are not limited to, dated written or electronic documentation that the Transmission Owner or Transmission Operator conducted an evaluation of the potential threats and vulnerabilities of a physical attack to their respective Transmission station(s), Transmission substation(s), and primary control center(s) as specified in Requirement R8.

R9. Each Transmission Owner that identified a Transmission station, Transmission substation, or primary control center in Requirement R5 and verified according to Requirement R6, and each Transmission Operator notified by a Transmission Owner according to Requirement R7, shall develop and implement a documented physical security plan(s) that covers their respective Transmission station(s), Transmission substation(s), and primary control center(s). The physical security plan(s) shall be developed within 120 calendar days following the completion of Requirement R6 and executed according to the timeline specified in the physical security plan(s). The physical security plan(s) shall include the following attributes: [*Violation Risk Factor*: *High; Time-Horizon: Long-term Planning*]

9.1. Resiliency or security measures designed collectively to deter, detect, delay, assess, communicate, and respond to potential physical threats and vulnerabilities identified during the evaluation conducted in Requirement R8.

9.2. Law enforcement contact and coordination information.

9.3. A timeline for executing the physical security enhancements and modifications specified in the physical security plan.

9.4. Provisions to evaluate evolving physical threats, and their corresponding security measures, to the Transmission station(s), Transmission substation(s), or primary control center(s).

M9. Examples of evidence may include, but are not limited to, dated written or electronic documentation of its physical security plan(s) that covers their respective identified and verified Transmission station(s), Transmission substation(s), and primary control center(s) as specified in Requirement R6, and additional evidence demonstrating execution of the physical security plan according to the timeline specified in the physical security plan.

R10. Each Transmission Owner that identified a Transmission station, Transmission substation, or primary control center in Requirement R5 and verified according to Requirement R6, and each Transmission Operator notified by a Transmission Owner according to Requirement R7, shall have an unaffiliated third party review the evaluation performed under Requirement R8 and the security plan(s) developed under Requirement R9. The review may occur concurrently with or after completion of the evaluation performed under Requirement R8 and the security plan development under Requirement R9. *[VRF: Medium; Time-Horizon: Long-term Planning]*

10.1. Each Transmission Owner and Transmission Operator shall select an unaffiliated third party reviewer from the following:

- An entity or organization with electric industry physical security experience and whose review staff has at least one member who holds either a Certified Protection Professional (CPP) or Physical Security Professional (PSP) certification.
- An entity or organization approved by the ERO.
- A governmental agency with physical security expertise.
- An entity or organization with demonstrated law enforcement, government, or military physical security expertise.

10.2. The Transmission Owner or Transmission Operator, respectively, shall ensure that the unaffiliated third party review is completed within 90 calendar days of completing the security plan(s) developed in Requirement R9. The unaffiliated third party review may, but is not required to, include recommended changes to the evaluation performed under Requirement R8 or the security plan(s) developed under Requirement R9.

10.3. If the unaffiliated third party reviewer recommends changes to the evaluation performed under Requirement R8 or security plan(s) developed under Requirement R9, the Transmission Owner or Transmission Operator shall, within 60 calendar days of the completion of the unaffiliated third party review, for each recommendation:

- Modify its evaluation or security plan(s) consistent with the recommendation; or
- Document the reason(s) for not modifying the evaluation or security plan(s) consistent with the recommendation.

10.4. Each Transmission Owner and Transmission Operator shall implement procedures, such as the use of non-disclosure agreements, for protecting sensitive or confidential information made available to the unaffiliated third party reviewer and to protect or exempt sensitive or confidential information developed pursuant to this Reliability Standard from public disclosure.

M10. Examples of evidence may include, but are not limited to, written or electronic documentation that the Transmission Owner or Transmission Operator had an unaffiliated third party review the evaluation performed under Requirement R8 and the security plan(s) developed under Requirement R9 as specified in Requirement R10 including, if applicable, documenting the reasons for not modifying the evaluation or security plan(s) in accordance with a recommendation under Part 10.3. Additionally, examples of evidence may include, but are not limited to, written or electronic documentation of procedures to protect information under Part 10.4.

C. Compliance

1. Compliance Monitoring Process

1.1. Compliance Enforcement Authority: "Compliance Enforcement Authority" means NERC or the Regional Entity, or any entity as otherwise designated by an Applicable Governmental Authority, in their respective roles of monitoring and/or enforcing compliance with mandatory and enforceable Reliability Standards in their respective jurisdictions.

1.2. Evidence Retention: The following evidence retention period(s) identify the period of time an entity is required to retain specific evidence to demonstrate compliance. For instances where the evidence retention period specified below is shorter than the time since the last audit, the Compliance Enforcement Authority may ask an entity to provide other evidence during an on-site visit to show that it was compliant for the full-time period since the last audit.

The Transmission Owner and Transmission Operator shall keep data or evidence to show compliance, as identified below, unless directed by its Compliance Enforcement Authority (CEA) to retain specific evidence for a longer period of time as part of an investigation:

The responsible entities shall retain evidence, as per Requirements R1 through R10, for three years.

If a Responsible Entity is found non-compliant, it shall keep information related to the non-compliance until mitigation is complete and approved, or for the time specified above, whichever is longer.

The Compliance Enforcement Authority shall keep the last audit records and all requested and submitted subsequent audit records.

1.3. Compliance Monitoring and Enforcement Program: As defined in the NERC Rules of Procedure, "Compliance Monitoring and Enforcement Program" refers to the identification of the processes that will be used to evaluate data or information for the purpose of assessing performance or outcomes with the associated Reliability Standard.

Violation Severity Levels

	Violation Severity Levels			
	Lower VSL	Moderate VSL	High VSL	Severe VSL
R1.	The Transmission Owner documented a list of applicable Transmission station(s) or Transmission substation(s) per Attachment 1, but did so after 36 calendar months, but less than or equal to 38 calendar months. OR The Transmission Owner documented a list of applicable Transmission station(s) or Transmission substation(s), but failed to identify less than or equal to 10% of the applicable Transmission station(s) or Transmission substation(s) per Attachment 1.	The Transmission Owner documented a list of applicable Transmission station(s) or Transmission substation(s) per Attachment 1, but did so after 38 calendar months, but less than or equal to 40 calendar months. OR The Transmission Owner documented a list of applicable Transmission station(s) or Transmission substation(s), but failed to identify more than 10% and less than or equal to 20% of the applicable Transmission station(s) or Transmission substation(s) per Attachment 1.	The Transmission Owner documented a list of applicable Transmission station(s) or Transmission substation(s) per Attachment 1, but did so after 40 calendar months, but less than or equal to 42 calendar months. OR The Transmission Owner documented a list of applicable Transmission station(s) or Transmission substation(s), but failed to identify more than 20% and less than or equal to 30% of the applicable Transmission station(s) or Transmission substation(s) per Attachment 1.	The Transmission Owner failed to document a list of applicable Transmission station(s) or Transmission substation(s) per Attachment 1. OR The Transmission Owner documented a list of applicable Transmission station(s) or Transmission substation(s) per Attachment 1, but did so after more than 42 calendar months. OR The Transmission Owner identified a list of applicable Transmission station(s) or Transmission substation(s), but failed to identify more than 30% of the applicable Transmission station(s) or

				Transmission substation(s) per Attachment 1.

	Violation Severity Levels			
	Lower VSL	Moderate VSL	High VSL	Severe VSL
R2.				The Transmission Owner did not have documented criteria to determine when Transmission station(s) or Transmission substation(s) were in proximity for those identified in Requirement R1. OR The Transmission Owner failed to use the documented criteria to identify which Transmission station(s) or Transmission substation(s) are in proximity to each other.
R3.	The Transmission Owner has a risk assessment methodology that failed to include one of the requirements listed in Parts 3.1 through 3.4.	The Transmission Owner has a risk assessment methodology that failed to include two of the requirements listed in Parts 3.1 through 3.4.	The Transmission Owner has a risk assessment methodology that failed to include three or more of the requirements listed in Parts 3.1 through 3.4.	The Transmission Owner has a risk assessment methodology that failed to include four of the requirements listed in Parts 3.1 through 3.4.

				OR The Transmission Owner does not have a risk assessment methodology.

	Violation Severity Levels			
	Lower VSL	Moderate VSL	High VSL	Severe VSL
R4.	The Transmission Owner failed to coordinate less than or equal to 25% of jointly owned applicable Transmission station(s) and Transmission substation(s) with other owner(s).	The Transmission Owner failed to coordinate more than 25% and less than or equal to 50% of jointly owned applicable Transmission station(s) and Transmission substation(s) with other owner(s).	The Transmission Owner failed to coordinate more than 50% and less than or equal to 75% of jointly owned applicable Transmission station(s) and Transmission substation(s) with other owner(s).	The Transmission Owner failed to coordinate more than 75% and less than or equal to 100% any evidence of jointly owned applicable Transmission station(s) and Transmission substation(s) with other owner(s).
R5.	The Transmission Owner performed a risk assessment, but did so after 36 calendar months, but less than or equal to 38 calendar months. OR The Transmission Owner performed a risk assessment inconsistent with one of the methodology requirements listed in Requirement R3, Parts 3.1 through 3.4.	The Transmission Owner performed a risk assessment, but did so after 38 calendar months, but less than or equal to 40 calendar months. OR The Transmission Owner performed a risk assessment inconsistent with two of the methodology requirements listed in Requirement R3, Parts 3.1 through 3.4.	The Transmission owner performed a risk assessment, but did so after 40 calendar months, but less than or equal to 42 calendar months. OR The Transmission Owner performed a risk assessment inconsistent with three or more of the methodology requirements listed in Requirement R3, Parts 3.1 through 3.4.	The Transmission Owner performed a risk assessment, but did so after more than 42 calendar months. OR The Transmission Owner performed a risk assessment inconsistent with four of the methodology requirements listed in Requirement R3, Parts 3.1 through 3.4.

	Violation Severity Levels			
	Lower VSL	Moderate VSL	High VSL	Severe VSL
			OR The Transmission Owner performed a risk assessment, but failed to include the primary control center identified in Part 5.2.	
R6.	The Transmission Owner had an unaffiliated third party verify the risk assessment performed under Requirement R5, but did so in more than 90 calendar days, but less than or equal to 100 calendar days following completion of Requirement R5.	The Transmission Owner had an unaffiliated third party verify the risk assessment performed under Requirement R5, but did so more than 100 calendar days, but less than or equal to 110 calendar days following completion of Requirement R5.	The Transmission Owner had an unaffiliated third party verify the risk assessment performed under Requirement R5, but did so more than 110 calendar days, but less than or equal to 120 calendar days following completion of Requirement R5.	The Transmission Owner had an unaffiliated third party verify the risk assessment performed under Requirement R5, but did so more than 120 calendar days following completion of Requirement R5.

	Violation Severity Levels			
	Lower VSL	Moderate VSL	High VSL	Severe VSL
	OR The Transmission Owner had an unaffiliated third party verify the risk assessment performed under Requirement R5 and modified or documented the technical basis for not modifying its identification under Requirement R5 as required by Part6.3, but did so more than 60 calendar days and less than or equal to 70 calendar days from completion of the third party verification.	OR The Transmission Owner had an unaffiliated third party verify the risk assessment performed under Requirement R5 and modified or documented the technical basis for not modifying its identification under Requirement R5 as required by Part6.3, but did so more than 70 calendar days and less than or equal to 80 calendar days from completion of the third party verification.	OR The Transmission Owner had an unaffiliated third party verify the risk assessment performed under Requirement R5 and modified or documented the technical basis for not modifying its identification under Requirement R5 as required by Part 6.3, but did so more than 80 calendar days from completion of the third party verification; OR The Transmission Owner had an unaffiliated third party verify the risk assessment performed under	OR The Transmission Owner failed to have an unaffiliated third party verify the risk assessment performed under Requirement R5. OR The Transmission Owner had an unaffiliated third party verify the risk assessment performed under Requirement R5, but failed to implement procedures for protecting information per Part 6.4.

	Violation Severity Levels			
	Lower VSL	Moderate VSL	High VSL	Severe VSL
			Requirement R5, but failed to modify or document the technical basis for not modifying its identification under R4 as required by Part 6.3.	
R7.	The Transmission Owner notified the Transmission Operator that operates the primary control center as specified in Requirement R7, but did so more than seven calendar days and less than or equal to nine calendar days following the completion of Requirement R6. OR The Transmission Owner notified the Transmission Operator that operates the primary control center of the removal from the identification in Requirement R5, but did so	The Transmission Owner notified the Transmission Operator that operates the primary control center as specified in Requirement R7, but did so more than nine calendar days and less than or equal to 11 calendar days following the completion of Requirement R6. OR The Transmission Owner notified the Transmission Operator that operates the primary control center of the removal from the identification in Requirement R5, but did so	The Transmission Owner notified the Transmission Operator that operates the primary control center as specified in Requirement R7, but did so more than 11 calendar days and less than or equal to 13 calendar days following the completion of Requirement R6. OR The Transmission Owner notified the Transmission Operator that operates the primary control center of the removal from the identification in Requirement R5, but did so	The Transmission Owner notified the Transmission Operator that operates the primary control center as specified in Requirement R7, but did so more than 13 calendar days following the completion of Requirement R6. OR The Transmission Owner failed to notify the Transmission Operator that it operates a control center identified in Requirement R5. OR

	Violation Severity Levels			
	Lower VSL	Moderate VSL	High VSL	Severe VSL
	more than seven calendar days and less than or equal to nine calendar days following the verification or the subsequent risk assessment.	more than nine calendar days and less than or equal to 11 calendar days following the verification or the subsequent risk assessment.	more than 11 calendar days and less than or equal to 13 calendar days following the verification or the subsequent risk assessment.	The Transmission Owner notified the Transmission Operator that operates the primary control center of the removal from the identification in Requirement R5, but did so more than 13 calendar days following the verification or the subsequent risk assessment. OR The Transmission Owner failed to notify the Transmission Operator that operates the primary control center of the removal from the identification in Requirement R5.

	Violation Severity Levels			
	Lower VSL	Moderate VSL	High VSL	Severe VSL
R8.	N/A	The Responsible Entity conducted an evaluation of the potential physical threats and vulnerabilities to each of its Transmission station(s), Transmission substation(s), and primary control center(s) identified in Requirement R5, but failed to consider one of Parts 8.1 through 8.3 in the evaluation.	The Responsible Entity conducted an evaluation of the potential physical threats and vulnerabilities to each of its Transmission station(s), Transmission substation(s), and primary control center(s) identified in Requirement R5, but failed to consider two of Parts 8.1 through 8.3 in the evaluation.	The Responsible Entity failed to conduct an evaluation of the potential physical threats and vulnerabilities to each of its Transmission station(s), Transmission substation(s), and primary control center(s) identified in Requirement R5. OR The Responsible Entity conducted an evaluation of the potential physical threats and vulnerabilities to each of its Transmission station(s), Transmission substation(s), and primary control center(s) identified in Requirement R5, but failed to consider Parts 8.1 through 8.3.

	Violation Severity Levels			
	Lower VSL	Moderate VSL	High VSL	Severe VSL
R9.	The Responsible Entity developed and implemented a documented physical security plan(s) that covers each of its Transmission station(s), Transmission substation(s), and primary control center(s) identified in Requirement R5, but did so more than 120 calendar days, but less than or equal to 130 calendar days after completing Requirement R6. OR The Responsible Entity developed and implemented a documented physical security plan(s) that covers its Transmission station(s), Transmission substation(s), and primary control center(s) identified in Requirement R5 and	The Responsible Entity developed and implemented a documented physical security plan(s) that covers each of its Transmission station(s), Transmission substation(s), and primary control center(s) identified in Requirement R5, but did so more than 130 calendar days, but less than or equal to 140 calendar days after completing Requirement R6. OR The Responsible Entity developed and implemented a documented physical security plan(s) that covers its Transmission station(s), Transmission substation(s), and primary control center(s) identified in Requirement R5 and	The Responsible Entity developed and implemented a documented physical security plan(s) that covers each of its Transmission station(s), Transmission substation(s), and primary control center(s) identified in Requirement R5, but did so more than 140 calendar days, but less than or equal to 150 calendar days after completing Requirement R6; OR The Responsible Entity developed and implemented a documented physical security plan(s) that covers its Transmission station(s), Transmission substation(s), and primary control center(s) identified in Requirement R5 and	The Responsible Entity developed and implemented a documented physical security plan(s) that covers each of its Transmission station(s), Transmission substation(s), and primary control center(s) identified in Requirement R5, but did so more than 150 calendar days after completing the verification in Requirement R6. OR The Responsible Entity failed to develop and implement a documented physical security plan(s) that covers its Transmission station(s), Transmission substation(s), and primary control center(s) identified in Requirement R5 and verified according to Requirement R6.

	Violation Severity Levels			
	Lower VSL	Moderate VSL	High VSL	Severe VSL
	verified according to Requirement R6, but failed to include one of Parts 9.1 through 9.4 in the plan.	verified according to Requirement R6, but failed to include two of Parts 9.1 through 9.4 in the plan.	verified according to Requirement R6, but failed to include three of Parts 9.1 through 9.4 in the plan.	OR The Responsible Entity developed and implemented a documented physical security plan(s) that covers its Transmission station(s), Transmission substation(s), and primary control center(s) identified in Requirement R5 and verified according to Requirement R6, but failed to include Parts 9.1 through 9.4 in the plan.
R10.	The Responsible Entity had an unaffiliated third party review the evaluation performed under Requirement R8 and the security plan(s) developed under Requirement R9, but did so in more than 90 calendar days, but less than or equal to 100 calendar days.	The Responsible Entity had an unaffiliated third party review the evaluation performed under Requirement R8 and the security plan(s) developed under Requirement R9, but did so in more than 100 calendar days, but less than or equal to 110 calendar days.	The Responsible Entity had an unaffiliated third party review the evaluation performed under Requirement R8 and the security plan(s) developed under Requirement R9, but did so more than 110 calendar days, but less than or equal to 120 calendar days.	The Responsible Entity failed to have an unaffiliated third party review the evaluation performed under Requirement R8 and the security plan(s) developed under Requirement R9 in more than 120 calendar days.

	Violation Severity Levels			
	Lower VSL	Moderate VSL	High VSL	Severe VSL
	OR The Responsible Entity had an unaffiliated third party review the evaluation performed under Requirement R8 and the security plan(s) developed under Requirement R9 and modified or documented the reason for not modifying the security plan(s) as specified in Part 10.3, but did so more than 60 calendar days and less than or equal to 70 calendar days following completion of the third party review.	OR The Responsible Entity had an unaffiliated third party review the evaluation performed under Requirement R8 and the security plan(s) developed under Requirement R9 and modified or documented the reason for not modifying the security plan(s) as specified in Part 10.3, but did so more than 70 calendar days and less than or equal to 80 calendar days following completion of the third party review.	OR The Responsible Entity had an unaffiliated third party review the evaluation performed under Requirement R8 and the security plan(s) developed under Requirement R9 and modified or documented the reason for not modifying the security plan(s) as specified in Part 10.3, but did so more than 80 calendar days following completion of the third party review. OR The Responsible Entity had an unaffiliated third party review the evaluation performed under Requirement R8 and the security plan(s) developed under Requirement R9, but	OR The Responsible Entity failed to have an unaffiliated third party review the evaluation performed under Requirement R8 and the security plan(s) developed under Requirement R9. OR The Responsible Entity had an unaffiliated third party review the evaluation performed under Requirement R8 and the security plan(s) developed under Requirement R9, but failed to implement procedures for protecting information per Part 10.4.

	Violation Severity Levels			
	Lower VSL	Moderate VSL	High VSL	Severe VSL
			did not document the reason for not modifying the security plan(s) as specified in Part 10.3.	

D. Regional Variances

None.

E. Interpretations

None.

F. Associated Documents

CIP-014-4 Implementation Plan

CIP-014-4 Technical Rationale Document

Version History

Version	Date	Action	Change Tracking
1	October 1, 2015	Effective Date	New
2	April 16, 2015	Revised to meet FERC Order 802 directive to remove “widespread”.	Revision
2	May 7, 2015	Adopted by the NERC Board of Trustees	
2	July 14, 2015	FERC Letter Order in Docket No. RD15-4-000 approving CIP-014-2	
3	January 19, 2022	Revised to remove Compliance Section 1.4	Revision
3	June 16, 2022	FERC Letter Order in Docket No.RD22-3-000 approving Modifications to CIP-014-3	Revision
3	June 16,2022	Effective Date	Revision
4	TBD	Revisions made by the Project 2023-06 drafting team	Revision

Attachment 1 – Applicability Criteria

Applicable Transmission station(s) or Transmission substation(s) are those that meet any of the following criteria:

1. Transmission Facilities operated at 500 kV or higher. For the purpose of this criterion, the collector bus for a generation plant is not considered a Transmission Facility, but is part of the generation interconnection Facility.

2. Transmission Facilities that are operating between 200 kV and 499 kV at a single station or substation, where the station or substation is connected at 200 kV or higher voltages to three or more other Transmission stations or substations and has an "aggregate weighted value" exceeding 3000 according to the table below. The "aggregate weighted value" for a single station or substation is determined by summing the "weight value per line" shown in the table below for each incoming and each outgoing BES Transmission Line that is connected to another Transmission station or substation. For the purpose of this criterion, the collector bus for a generation plant is not considered a Transmission Facility, but is part of the generation interconnection Facility.

Voltage Value of a Line	Weight Value per Line
less than 200 kV (not applicable)	(not applicable)
200 kV to 299 kV	700
300 kV to 499 kV	1300
500 kV and above	0

3. Transmission Facilities at a single station or substation location that are identified by its Reliability Coordinator, Planning Coordinator, or Transmission Planner as critical to the derivation of Interconnection Reliability Operating Limits (IROLs) and their associated contingencies.

4. Transmission Facilities identified as essential to meeting Nuclear Plant Interface Requirements.

Standard Development Timeline

This section is maintained by the drafting team during the development of the standard and will be removed when the standard is adopted by the NERC Board of Trustees (Board).

Description of Current Draft

CIP-014-4 is posted for a 45-day formal comment period with initial ballot.

Completed Actions	Date
Standards Committee approved Standard Authorization Request (SAR) for posting	June 21, 2023
SAR posted for comment	July 26, 2023 – August 24, 2023
Accepted Revised SAR	January 17, 2024

Anticipated Actions	Date
45-day formal or informal comment period with ballot	May 20, 2024 – July 3, 2024
45-day formal or informal comment period with additional ballot	September 23, 2024 – November 6, 2024
10-day final ballot	February 3, 2025 – February 12, 2025
Board adoption	April 4, 2025

New or Modified Term(s) Used in NERC Reliability Standards

This section includes all new or modified terms used in the proposed standard that will be included in the *Glossary of Terms Used in NERC Reliability Standards* upon applicable regulatory approval. Terms used in the proposed standard that are already defined and are not being modified can be found in the *Glossary of Terms Used in NERC Reliability Standards*. The new or revised terms listed below will be presented for approval with the proposed standard. Upon Board adoption, this section will be removed.

Term(s):

None.

A. Introduction

1. **Title:** Physical Security

2. **Number:** CIP-014-4

3. **Purpose:** To identify and protect Transmission stations and Transmission substations, and their associated primary control centers, that if rendered inoperable or damaged as a result of a physical attack could result in instability, uncontrolled separation, or Cascading within an Interconnection.

4. **Applicability:**

   4.1. Functional Entities:

   4.1.1. Transmission Owner that owns Transmission station(s) or Transmission substation(s) that meet the applicability criteria of Attachment 1.

   4.1.2. Transmission Operator.

   Exemption: Facilities in a "protected area," as defined in 10 C.F.R. § 73.2, within the scope of a security plan approved or accepted by the Nuclear Regulatory Commission are not subject to this Standard; or Facilities within the scope of a security plan approved or accepted by the Canadian Nuclear Safety Commission are not subject to this Reliability Standard.

5. **Effective Date:** See Implementation Plan for CIP-014-4.

B. Requirements and Measures

R1. Each Transmission Owner, at least once every 36 calendar months, shall ~~establish and maintain~~document a list of applicable Transmission station(s) and Transmission substation(s) meeting any of the criteria ~~for performing risk assessments in accordance with the criteria~~ in Attachment 1 that are either existing or planned to be in service within 36 calendar months. ~~Each Transmission Owner shall:~~ *[Violation Risk Factor: High; Time-Horizon: Long-term Planning]*

~~**1.1.** Consider all Transmission station(s) and Transmission substation(s) that are existing or planned to be in service within 36 months; and~~

~~**1.2.** Review the list every 36 months and update the list, if necessary.~~

~~**1.3.** If the Transmission Owner identifies no applicable Transmission station(s) and Transmission substation(s), then no additional actions are required to fulfill the remainder of the standard.~~

M1. Examples of evidence may include, but are not limited to, dated written or electronic documentation of the Transmission stations and Transmission substations (existing ~~or~~ and those planned to be in service within 36 calendar months) that meet any of the criteria in Attachment 1 ~~as specified in Requirement R1~~.

R2. Each Transmission Owner shall ~~establish and implement~~have documented criteria ~~for identifying~~to determine those Transmission station(s) and Transmission substation(s) ~~in proximity to those identified in Requirement R1~~, irrespective of ownership, within ½ mile of an applicable Transmission station or Transmission substation documented in Requirement R1, that could be impacted by a single physical attack. The criteria shall address at a minimum the following:~~that shall be included in the risk assessment.~~ *[Violation Risk Factor: Medium; Time-Horizon: Long-term Planning]*

2.1. Line of sight between multiple Transmission station(s) or Transmission substation(s) from a single location without obstruction.

2.2. Ease of access from a common roadway that exists between multiple Transmission station(s) or Transmission substation(s).

~~**2.1.** The criteria shall, at a minimum include the following:~~

~~**2.1.1.** Line of sight between multiple Transmission station or Transmission substation yards from a single site.~~

~~**2.1.2.** Ease of access from a common public roadway that exists between multiple Transmission stations or Transmission substation yards.~~

~~**2.1.3.** The Transmission station or Transmission substation yards are in close enough proximity that a single event can impact multiple Transmission stations or Transmission substations.~~

M2. Examples of evidence may include, but are not limited to, dated written or electronic documentation of the criteria established in Requirement R2. ~~used to determine the Transmission station(s) and Transmission substation(s) in proximity to those identified in Requirement R1 and the list of groups of Transmission station(s) and Transmission substation(s) identified in Requirements R1 and R2.~~

R3. Each Transmission Owner shall have a documented risk assessment methodology, including criteria for steady-state and dynamic simulations, for evaluating the loss due to a physical attack of each applicable Transmission station(s) and Transmission substation(s) documented in Requirement R1 and Transmission substation(s) or Transmission station(s) determined to be in proximity per Requirement R2~~identified as applicable~~. The methodology shall include, at a minimum, the following: *[Violation Risk Factor: ~~Lower~~High; Time-Horizon: Long-term Planning]*

3.1. Technically supported thresholds and rationale for determining the amount of acceptable load loss, the amount of acceptable generation loss, ~~and~~ post-event response, and any additional considerations recognized as resulting in instability, uncontrolled separation, or Cascading within an Interconnection. The technical rationale shall include:

3.1.1. Steady-state and dynamic system response to events that could lead to ~~L~~load loss, generation loss, and other unacceptable post-event response within an Interconnection.~~post-event response within an Interconnection shall be evaluated, using at a minimum the following:~~

~~**3.1.1.1.** Steady state voltages~~

~~**3.1.1.2.** Transient voltage response~~

~~**3.1.1.3.** Thermal loading of Facilities~~

~~**3.1.1.4.** Relay loadability~~

~~**3.1.1.5.** Post-contingency voltage deviation~~

~~**3.1.1.6.** Rotor angle stability~~

~~**3.1.1.7.** Loss of IBR generation~~

~~**3.1.1.8.** Frequency exceeding generator limits~~

~~**3.1.1.9.** Frequency stability~~

~~**3.1.1.10.** Acceptable damping of oscillations~~

~~**3.1.1.11.** Cascading line tripping~~

~~**3.1.1.12.** Steady-state voltage stability~~

~~**3.1.2.** Technically supported thresholds for acceptable load loss and acceptable generation loss.~~

3.2. Steady-state and dynamic simulations shall be performed under System conditions that are more likely to contribute~~Analysis at System peak, Off-Peak Load, and other System conditions susceptible~~ to instability, uncontrolled separation, or Cascading within an Interconnection~~ shall be conducted in dynamic and steady state simulations~~.

3.2.1. The simulations~~Steady state analysis~~ shall include the removal of all ~~e~~Elements that Protection Systems and other controls are expected to automatically disconnect for each event~~, including any tripped facilities from dynamic simulations~~.

3.2.2. If ~~A Transmission station or Transmission substation that is already identified as critical to the Interconnection in dynamic or steady~~ steady-state and dynamic simulations each show acceptable system response but additional Elements trip during the dynamic simulation of an event, then additional steady-state analysis including any tripped Elements from the dynamic simulations shall be conducted~~studies does not require any additional studies~~.

3.3. For each applicable Transmission station or Transmission substation listed in accordance with Requirement R1, analysis shall include a Fault at the applicable Transmission station or Transmission substation and each Transmission station or Transmission substation identified in accordance with Requirement R2 as being in proximity to the applicable Transmission station or Transmission substation. ~~Analysis of fault simulations, as follows:~~

~~**3.4.** If the Transmission station(s) or Transmission substation(s) identified in accordance with Requirement R1 is a singular Transmission station or Transmission substation, then fault simulations shall include a bolted 3-phase fault at the highest voltage level bus.~~

~~**3.5.** If the Transmission station(s) or Transmission substation(s) identified in accordance with Requirement R2 includes more than one Transmission station or Transmission substation, then fault simulations shall include simultaneous single-phase faults at the highest voltage level buses of each of the Transmission station(s) or Transmission substation(s).~~

~~**3.6.**~~**3.4.** Fault simulations ~~shall~~ that assume the loss of communication and Protection ~~s~~System ~~protection~~ at the Transmission station(s) or Transmission substation(s) studied under Requirement R3, Parts 3.2~~4~~ and 3.3~~5~~.

~~**3.6.1.**~~**3.4.1.** Delayed (remote) clearing times shall be used unless otherwise technically substantiated.

~~**3.6.2.**~~**3.4.2.** Actual or more conservative estimates of clearing times shall be used unless otherwise technically substantiated.

M3. Each Transmission Owner shall provide dated evidence, such as electronic or hard copies, of risk assessment methodology satisfying Requirement R3.

R4. Each Transmission Owner with ~~jointly owned~~applicable Transmission station(s) and Transmission substation(s) per Requirement R1 owned by multiple Transmission Owners shall coordinate with those Transmission Owners to determine and document ~~identify each entity's~~their individual and joint responsibilities for performing any required risk assessments per Requirement R5~~at least once every 36 calendar months~~. *[VRF: Medium; Time-Horizon: Operations Planning, Long-term Planning]*

M4. Examples of acceptable evidence may include, but are not limited to, dated documentation, such as meeting minutes, agreements, and email correspondence, that identifies that agreement has been reached on individual and joint responsibilities for performing the required ~~studies and~~risk assessments.

R5. At least once every 36 calendar months, ~~E~~each Transmission Owner shall ~~conduct~~ perform a risk assessment~~, using the methodology established in Requirement R3, on each~~ to identify Transmission station(s) and Transmission substation(s) that if rendered inoperable or damaged as a result of a physical attack could result in instability, uncontrolled separation, or Cascading within an Interconnection, using the methodology established in Requirement R3 including any Transmission station(s) and Transmission substation(s) identified in accordance with documentation established per Requirement R4~~identified as applicable in accordance with Requirements R1, R2, and R4 at least once every 36 calendar months~~. *[VRF: ~~Medium~~High; Time-Horizon: Operations Planning, Long-term Planning]*

5.1. A Transmission station~~(s) and~~ or Transmission substation~~(s) previously~~ identified in dynamic or steady-state simulations as causing instability, uncontrolled separation, or Cascading within an Interconnection when rendered inoperable or damaged as a result of a physical attack does not require any additional simulations during the current risk assessment~~as critical do not require subsequent risk assessments if they continue to be classified as critical~~.

5.2. The Transmission Owner shall identify the primary control center that operationally controls each Transmission station or Transmission substation identified in the Requirement R5 risk assessment~~classified as critical~~.

M5. Examples of acceptable evidence may include, but are not limited to, dated written or electronic documentation of the risk assessment satisfying Requirement R5. For Requirement R5, Part 5.2, examples of acceptable evidence may include, but are not limited to, dated written or electronic documentation of the identification of the primary control center that operationally controls each identified Transmission station or Transmission substation~~ classified as critical~~.

R6. Each Transmission Owner shall have an unaffiliated third party verify the risk assessment performed under Requirement R5. The verification may occur concurrent with or after the risk assessment performed under Requirement R5. *[VRF: High; Time-Horizon: Long-term Planning]*

6.1. ~~Resiliency or security measures designed collectively to deter, detect, delay, assess, communicate, and respond to potential physical threats and vulnerabilities identified during the evaluation conducted in Requirement R5.~~ Each Transmission Owner shall select an unaffiliated verifying entity that is either:

6.1.1. A registered Planning Coordinator, Transmission Planner, or Reliability Coordinator; or

6.1.2. An entity that has transmission planning or analysis experience.

6.2. The unaffiliated third party verification shall verify the Transmission Owner's risk assessment performed under Requirement R5, which may include recommendations for the addition or deletion of a Transmission station(s) or Transmission substation(s). The Transmission Owner shall ensure the verification is completed within 90 calendar days following the completion of the Requirement R5 risk assessment.

6.3. ~~A timeline for executing the physical security enhancements and modifications specified in the physical security plan.~~ If the unaffiliated verifying entity recommends that the Transmission Owner add a Transmission station(s) or Transmission substation(s) to, or remove a Transmission station(s) or Transmission substation(s) from, its identification under Requirement R5, the Transmission Owner shall either, within 60 calendar days of completion of the verification, for each recommended addition or removal of a Transmission station or Transmission substation:

6.3.1. Modify its identification under Requirement R5 consistent with the recommendation; or

6.3.2. Document the technical basis for not modifying the identification in accordance with the recommendation.

6.4. Each Transmission Owner shall implement procedures, such as the use of non-disclosure agreements, for protecting sensitive or confidential information made available to the unaffiliated third party verifier and to protect or exempt sensitive or confidential information developed pursuant to this Reliability Standard from public disclosure.

M6. Examples of acceptable evidence may include, but are not limited to, dated written or electronic documentation that the Transmission Owner completed an unaffiliated third party verification of the Requirement R5 risk assessment and satisfied all of the applicable provisions of Requirement R6, including, if applicable, documenting the technical basis for not modifying the identification in Requirements R1, R2, R3, R4, and R5 as specified under Part 6.3. Additionally, examples of evidence may include, but are not limited to, written or electronic documentation of procedures to protect information under Part 6.4.

R7. For a primary control center(s) identified by the Transmission Owner according to Requirement R5, Part 5.2 that a) operationally controls an identified Transmission station or Transmission substation verified according to Requirement R5, and b) is not under the operational control of the Transmission Owner: the Transmission Owner shall, within seven calendar days following completion of Requirement R5, notify the Transmission Operator that has operational control of the primary control center of such identification and the date of completion of Requirement R5 . *[VRF: Medium; Time-Horizon: Long-term Planning]*

7.1. If a Transmission station or Transmission substation previously identified under Requirements R1, R2, R3, R4, and R5 and verified according to Requirement R6 is removed from the identification during a subsequent risk assessment performed according to Requirement R5 or a verification according to Requirement R6, then the Transmission Owner shall, within seven calendar days following the verification or the subsequent risk assessment, notify the Transmission Operator that has operational control of the primary control center of the removal.

M7. Examples of acceptable evidence may include, but are not limited to, written or electronic notifications or communications that the Transmission Owner notified each Transmission Operator, as applicable, according to Requirement R7.

R8. Each Transmission Owner that identified a Transmission station, Transmission substation, or a primary control center in Requirement R5 and verified according to Requirement R6, and each Transmission Operator notified by a Transmission Owner according to Requirement R7, shall conduct an evaluation of the potential threats and vulnerabilities of a physical attack to each of their respective Transmission station(s), Transmission substation(s), and primary control center(s) identified in Requirement R5 and verified according to Requirement R6. The evaluation shall consider the following: *[VRF: Medium; Time-Horizon: Operations Planning, Long-term Planning]*

8.1. Unique characteristics of the identified and verified Transmission station(s), Transmission substation(s), and primary control center(s);

8.2. Prior history of attack on similar facilities taking into account the frequency, geographic proximity, and severity of past physical security related events; and

8.3. Intelligence or threat warnings received from sources such as law enforcement, the Electric Reliability Organization (ERO), the Electricity Sector Information Sharing and Analysis Center (ES-ISAC), U.S. federal and/or Canadian governmental agencies, or their successors.

M8. Examples of evidence may include, but are not limited to, dated written or electronic documentation that the Transmission Owner or Transmission Operator conducted an evaluation of the potential threats and vulnerabilities of a physical attack to their respective Transmission station(s), Transmission substation(s), and primary control center(s) as specified in Requirement R8.

R9. Each Transmission Owner that identified a Transmission station, Transmission substation, or primary control center in Requirement R5 and verified according to Requirement R6, and each Transmission Operator notified by a Transmission Owner according to Requirement R7, shall develop and implement a documented physical security plan(s) that covers their respective Transmission station(s), Transmission substation(s), and primary control center(s). The physical security plan(s) shall be developed within 120 calendar days following the completion of Requirement R6 and executed according to the timeline specified in the physical security plan(s). The physical security plan(s) shall include the following attributes: [*Violation Risk Factor*: *High; Time-Horizon: Long-term Planning*]

9.1. Resiliency or security measures designed collectively to deter, detect, delay, assess, communicate, and respond to potential physical threats and vulnerabilities identified during the evaluation conducted in Requirement R8.

9.2. Law enforcement contact and coordination information.

9.3. A timeline for executing the physical security enhancements and modifications specified in the physical security plan.

9.4. Provisions to evaluate evolving physical threats, and their corresponding security measures, to the Transmission station(s), Transmission substation(s), or primary control center(s).

M9. Examples of evidence may include, but are not limited to, dated written or electronic documentation of its physical security plan(s) that covers their respective identified and verified Transmission station(s), Transmission substation(s), and primary control center(s) as specified in Requirement R6, and additional evidence demonstrating execution of the physical security plan according to the timeline specified in the physical security plan.

R10. Each Transmission Owner that identified a Transmission station, Transmission substation, or primary control center in Requirement R5 and verified according to Requirement R6, and each Transmission Operator notified by a Transmission Owner according to Requirement R7, shall have an unaffiliated third party review the evaluation performed under Requirement R8 and the security plan(s) developed under Requirement R9. The review may occur concurrently with or after completion of the evaluation performed under Requirement R8 and the security plan development under Requirement R9. *[VRF: Medium; Time-Horizon: Long-term Planning]*

10.1. Each Transmission Owner and Transmission Operator shall select an unaffiliated third party reviewer from the following:

- An entity or organization with electric industry physical security experience and whose review staff has at least one member who holds either a Certified Protection Professional (CPP) or Physical Security Professional (PSP) certification.

- An entity or organization approved by the ERO.
- A governmental agency with physical security expertise.
- An entity or organization with demonstrated law enforcement, government, or military physical security expertise.

10.2. The Transmission Owner or Transmission Operator, respectively, shall ensure that the unaffiliated third party review is completed within 90 calendar days of completing the security plan(s) developed in Requirement R9. The unaffiliated third party review may, but is not required to, include recommended changes to the evaluation performed under Requirement R8 or the security plan(s) developed under Requirement R9.

10.3. If the unaffiliated third party reviewer recommends changes to the evaluation performed under Requirement R8 or security plan(s) developed under Requirement R9, the Transmission Owner or Transmission Operator shall, within 60 calendar days of the completion of the unaffiliated third party review, for each recommendation:

- Modify its evaluation or security plan(s) consistent with the recommendation; or
- Document the reason(s) for not modifying the evaluation or security plan(s) consistent with the recommendation.

10.4. Each Transmission Owner and Transmission Operator shall implement procedures, such as the use of non-disclosure agreements, for protecting sensitive or confidential information made available to the unaffiliated third party reviewer and to protect or exempt sensitive or confidential information developed pursuant to this Reliability Standard from public disclosure.

M10. Examples of evidence may include, but are not limited to, written or electronic documentation that the Transmission Owner or Transmission Operator had an unaffiliated third party review the evaluation performed under Requirement R8 and the security plan(s) developed under Requirement R9 as specified in Requirement R10 including, if applicable, documenting the reasons for not modifying the evaluation or security plan(s) in accordance with a recommendation under Part 10.3. Additionally, examples of evidence may include, but are not limited to, written or electronic documentation of procedures to protect information under Part 10.4.

C. Compliance

1. Compliance Monitoring Process

1.1. Compliance Enforcement Authority: "Compliance Enforcement Authority" means NERC or the Regional Entity, or any entity as otherwise designated by an Applicable Governmental Authority, in their respective roles of monitoring

and/or enforcing compliance with mandatory and enforceable Reliability Standards in their respective jurisdictions.

1.2. Evidence Retention: The following evidence retention period(s) identify the period of time an entity is required to retain specific evidence to demonstrate compliance. For instances where the evidence retention period specified below is shorter than the time since the last audit, the Compliance Enforcement Authority may ask an entity to provide other evidence during an on-site visit to show that it was compliant for the full-time period since the last audit.

The Transmission Owner and Transmission Operator shall keep data or evidence to show compliance, as identified below, unless directed by its Compliance Enforcement Authority (CEA) to retain specific evidence for a longer period of time as part of an investigation:

The responsible entities shall retain evidence, as per Requirements R1 through R10, for three years.

If a Responsible Entity is found non-compliant, it shall keep information related to the non-compliance until mitigation is complete and approved, or for the time specified above, whichever is longer.

The Compliance Enforcement Authority shall keep the last audit records and all requested and submitted subsequent audit records.

1.3. Compliance Monitoring and Enforcement Program: As defined in the NERC Rules of Procedure, "Compliance Monitoring and Enforcement Program" refers to the identification of the processes that will be used to evaluate data or information for the purpose of assessing performance or outcomes with the associated Reliability Standard.

Violation Severity Levels

	Violation Severity Levels			
	Lower VSL	Moderate VSL	High VSL	Severe VSL
R1.	The Transmission Owner documented ~~identified~~ a list of applicable Transmission station(s) or Transmission substation(s) per Attachment 1, but did so after 36 calendar months, but less than or equal to 38 calendar months. OR The Transmission Owner documented ~~identified~~ a list of applicable Transmission station(s) or Transmission substation(s)~~substations~~, but failed to identify less than or equal to 10% of the applicable Transmission station(s) or Transmission substation(s) per Attachment 1.	The Transmission Owner documented ~~identified~~ a list of applicable Transmission station(s) or Transmission substation(s) per Attachment 1, but did so after 38 calendar months, but less than or equal to 40 calendar months. OR The Transmission Owner documented ~~identified~~ a list of applicable Transmission station(s) or Transmission substation(s)~~substations~~, but failed to identify more than 10% and less than or equal to 20% of the applicable Transmission station(s) or Transmission substation(s) per Attachment 1.	The Transmission Owner documented ~~identified~~ a list of applicable Transmission station(s) or Transmission substation(s) per Attachment 1, but did so after 40 calendar months, but less than or equal to 42 calendar months. OR The Transmission Owner documented ~~identified~~ a list of applicable Transmission station(s) or Transmission substation(s)~~substations~~, but failed to identify more than 20% and less than or equal to 30% of the applicable Transmission station(s) or Transmission substation(s) per Attachment 1.	The Transmission Owner failed to document ~~identify~~ a list of applicable Transmission station(s) or Transmission substation(s) per Attachment 1. OR The Transmission Owner documented ~~identified~~ a list of applicable Transmission station(s) or Transmission substation(s) per Attachment 1, but did so after more than 42 calendar months. OR The Transmission Owner identified a list of applicable Transmission station(s) or Transmission substation(s)~~substations~~, but failed to identify more than 30% of the applicable Transmission station(s) or

				Transmission substation(s) per Attachment 1.

	Violation Severity Levels			
	Lower VSL	Moderate VSL	High VSL	Severe VSL
R2.			~~The Transmission Owner had insufficient documented criteria for determining when Transmission station(s) or Transmission substation(s) were in proximity for those identified in Requirement R1.~~ ~~OR~~ ~~The Transmission Owner failed to use the documented criteria to identify all Transmission station(s) or Transmission substation(s) in proximity.~~	The Transmission Owner did not have documented criteria to determine when Transmission station(s) or Transmission substation(s) were in proximity for those identified in Requirement R1. OR The Transmission Owner failed to use the documented criteria to identify which Transmission station(s) or Transmission substation(s) are in proximity to each other.
R3.	The Transmission Owner has a risk assessment methodology that failed to include one of the requirements listed in	The Transmission Owner has a risk assessment methodology that failed to include two of the requirements listed in	The Transmission Owner has a risk assessment methodology that failed to include three or more of the requirements listed in	The Transmission Owner has a risk assessment methodology that failed to include four of the requirements listed in Parts 3.1 through 3.4.

	~~Requirement R3,~~ Parts 3.1 through 3.4~~6~~.	~~Requirement R3,~~ Parts 3.1 through 3.4~~6~~.	~~Requirement R3,~~ Parts 3.1 through 3.4~~6~~.	OR The Transmission Owner does not have a risk assessment methodology.

	Violation Severity Levels			
	Lower VSL	Moderate VSL	High VSL	Severe VSL
R4.	The Transmission Owner failed to coordinate less than or equal to 25% of jointly owned applicable Transmission station(s) and Transmission substation(s) with other owner(s). ~~performed a risk assessment, but did so after 36 calendar months, but less than or equal to 38 calendar months.~~ ~~OR~~ ~~The Transmission Owner performed a risk assessment inconsistent with one of the methodology requirements listed in Requirement R3, Parts 3.1 through 3.6.~~	The Transmission Owner failed to coordinate more than 25% and less than or equal to 50% of jointly owned applicable Transmission station(s) and Transmission substation(s) with other owner(s). ~~performed a risk assessment, but did so after 38 calendar months, but less than or equal to 40 calendar months.~~ ~~OR~~ ~~The Transmission Owner performed a risk assessment inconsistent with two of the methodology requirements listed in Requirement R3, Parts 3.1 through 3.6.~~ ~~OR~~ ~~The Transmission Owner performed a risk assessment that was insufficient with~~	The Transmission Owner failed to coordinate more than 50% and less than or equal to 75% of jointly owned applicable Transmission station(s) and Transmission substation(s) with other owner(s).~~performed a risk assessment inconsistent with three or more of the methodology requirements listed in Requirement R3, Parts 3.1 through 3.6.~~ ~~OR~~ ~~The Transmission Owner performed a risk assessment, but failed to include the primary control center identified in Requirement R4, Part 4.3.~~	The Transmission Owner failed to coordinate more than 75% and less than or equal to 100% any evidence of jointly owned applicable Transmission station(s) and Transmission substation(s) with other owner(s).~~performed a risk assessment, but did so after more than 42 calendar months.~~

		~~respect to Requirement R4, Part 4.2.~~		
R5.	The Transmission Owner performed a risk assessment, but did so after 36 calendar months, but less	The Transmission Owner performed a risk assessment, but did so after 38 calendar months, but less	The Transmission owner performed a risk assessment, but did so after 40 calendar months, but less	The Transmission Owner performed a risk assessment, but did so after more than 42 calendar months. OR The Transmission Owner performed a risk assessment inconsistent with four of the methodology requirements listed in Requirement R3, Parts 3.1 through 3.4.
	Violation Severity Levels			
	Lower VSL	**Moderate VSL**	**High VSL**	**Severe VSL**
	than or equal to 38 calendar months. OR The Transmission Owner performed a risk assessment inconsistent with one of the methodology requirements listed in Requirement R3, Parts 3.1 through 3.~~4~~6.	than or equal to 40 calendar months. OR The Transmission Owner performed a risk assessment inconsistent with two of the methodology requirements listed in Requirement R3, Parts 3.1 through 3.~~4~~6.	than or equal to 42 calendar months. OR The Transmission Owner performed a risk assessment inconsistent with three or more of the methodology requirements listed in Requirement R3, Parts 3.1 through 3.~~4~~6.	

		~~OR~~ ~~The Transmission Owner performed a risk assessment that was insufficient with respect to Requirement R4, Part 4.2.~~	OR The Transmission Owner performed a risk assessment, but failed to include the primary control center identified in ~~Requirement R4,~~ Part 5.24.~~3~~.	
R6.	The Transmission Owner had an unaffiliated third party verify the risk assessment performed under Requirement R5~~4~~, but did so in more than 90 calendar	The Transmission Owner had an unaffiliated third party verify the risk assessment performed under Requirement R5~~4~~, but did so more than 100 calendar	The Transmission Owner had an unaffiliated third party verify the risk assessment performed under Requirement R5~~4~~, but did so more than 110 calendar	The Transmission Owner had an unaffiliated third party verify the risk assessment performed under Requirement R5~~4~~, but did so more than 120 calendar days following completion of

	Violation Severity Levels			
	Lower VSL	**Moderate VSL**	**High VSL**	**Severe VSL**
	days, but less than or equal to 100 calendar days following completion of Requirement R5~~4~~. OR The Transmission Owner had an unaffiliated third party verify the risk assessment performed under	days, but less than or equal to 110 calendar days following completion of Requirement R5~~4~~. OR The Transmission Owner had an unaffiliated third party verify the risk assessment performed under	days, but less than or equal to 120 calendar days following completion of Requirement R5~~4~~. OR The Transmission Owner had an unaffiliated third party verify the risk assessment performed under	Requirement R5~~4~~. OR The Transmission Owner failed to have an unaffiliated third party verify the risk assessment performed under Requirement R5~~4~~. OR

	Requirement R54 and modified or documented the technical basis for not modifying its identification under Requirement R54 as required by Part 6.35.2, but did so more than 60 calendar days and less than or equal to 70 calendar days from completion of the third party verification.	Requirement R54 and modified or documented the technical basis for not modifying its identification under Requirement R54 as required by Part 6.35.2, but did so more than 70 calendar days and less than or equal to 80 calendar days from completion of the third party verification.	Requirement R54 and modified or documented the technical basis for not modifying its identification under Requirement R54 as required by Part 5.26.3, but did so more than 80 calendar days from completion of the third party verification; OR The Transmission Owner had an unaffiliated third party verify the risk assessment performed under	The Transmission Owner had an unaffiliated third party verify the risk assessment performed under Requirement R54, but failed to implement procedures for protecting information per Part 5.26.4.

	Violation Severity Levels			
	Lower VSL	Moderate VSL	High VSL	Severe VSL
			Requirement R54, but failed to modify or document the technical basis for not modifying its identification under R4 as required by Part 6.35.2.	
R7.	The Transmission Owner notified the Transmission Operator that operates the	The Transmission Owner notified the Transmission Operator that operates the	The Transmission Owner notified the Transmission Operator that operates the	The Transmission Owner notified the Transmission Operator that operates the

	primary control center as specified in Requirement R7~~6~~, but did so more than seven calendar days and less than or equal to nine calendar days following the completion of Requirement R6~~5~~. OR The Transmission Owner notified the Transmission Operator that operates the primary control center of the removal from the identification in Requirement R5~~4~~, but did so	primary control center as specified in Requirement R7~~6~~, but did so more than nine calendar days and less than or equal to 11 calendar days following the completion of Requirement R6~~5~~. OR The Transmission Owner notified the Transmission Operator that operates the primary control center of the removal from the identification in Requirement R5~~4~~, but did so	primary control center as specified in Requirement R7~~6~~, but did so more than 11 calendar days and less than or equal to 13 calendar days following the completion of Requirement R6~~5~~. OR The Transmission Owner notified the Transmission Operator that operates the primary control center of the removal from the identification in Requirement R5~~4~~, but did so	primary control center as specified in Requirement R7~~6~~, but did so more than 13 calendar days following the completion of Requirement R6~~5~~. OR The Transmission Owner failed to notify the Transmission Operator that it operates a control center identified in Requirement R5~~4~~. OR

	Violation Severity Levels			
	Lower VSL	**Moderate VSL**	**High VSL**	**Severe VSL**
	more than seven calendar days and less than or equal to nine calendar days following the verification or the subsequent risk assessment.	more than nine calendar days and less than or equal to 11 calendar days following the verification or the subsequent risk assessment.	more than 11 calendar days and less than or equal to 13 calendar days following the verification or the subsequent risk assessment.	The Transmission Owner notified the Transmission Operator that operates the primary control center of the removal from the identification in Requirement R5~~4~~, but did so more than 13 calendar days following the verification or

				the subsequent risk assessment. OR The Transmission Owner failed to notify the Transmission Operator that operates the primary control center of the removal from the identification in Requirement R5~~4~~.

	Violation Severity Levels			
	Lower VSL	Moderate VSL	High VSL	Severe VSL
R8.	N/A	The Responsible Entity conducted an evaluation of the potential physical threats and vulnerabilities to each of its Transmission station(s), Transmission substation(s), and primary control center(s) identified in Requirement R54, but failed to consider one of Parts ~~7.1~~8.1 through ~~7.3~~8.3 in the evaluation.	The Responsible Entity conducted an evaluation of the potential physical threats and vulnerabilities to each of its Transmission station(s), Transmission substation(s), and primary control center(s) identified in Requirement ~~R4~~R5, but failed to consider two of Parts ~~7~~8.1 through ~~7~~8.3 in the evaluation.	The Responsible Entity failed to conduct an evaluation of the potential physical threats and vulnerabilities to each of its Transmission station(s), Transmission substation(s), and primary control center(s) identified in Requirement R54. OR The Responsible Entity conducted an evaluation of the potential physical threats and vulnerabilities to each of its Transmission station(s), Transmission substation(s), and primary control center(s) identified in Requirement R54, but failed to consider Parts ~~7~~8.1 through ~~7~~8.3.

	Violation Severity Levels			
	Lower VSL	Moderate VSL	High VSL	Severe VSL
R9.	The Responsible Entity developed and implemented a documented physical security plan(s) that covers each of its Transmission station(s), Transmission substation(s), and primary control center(s) identified in Requirement R54, but did so more than 120 calendar days, but less than or equal to 130 calendar days after completing Requirement R65. OR The Responsible Entity developed and implemented a documented physical security plan(s) that covers its Transmission station(s), Transmission substation(s), and primary control center(s) identified in Requirement R54 and	The Responsible Entity developed and implemented a documented physical security plan(s) that covers each of its Transmission station(s), Transmission substation(s), and primary control center(s) identified in Requirement R4R5, but did so more than 130 calendar days, but less than or equal to 140 calendar days after completing Requirement R65. OR The Responsible Entity developed and implemented a documented physical security plan(s) that covers its Transmission station(s), Transmission substation(s), and primary control center(s) identified in Requirement R54 and	The Responsible Entity developed and implemented a documented physical security plan(s) that covers each of its Transmission station(s), Transmission substation(s), and primary control center(s) identified in Requirement R54, but did so more than 140 calendar days, but less than or equal to 150 calendar days after completing Requirement R65; OR The Responsible Entity developed and implemented a documented physical security plan(s) that covers its Transmission station(s), Transmission substation(s), and primary control center(s) identified in Requirement R54 and	The Responsible Entity developed and implemented a documented physical security plan(s) that covers each of its Transmission station(s), Transmission substation(s), and primary control center(s) identified in Requirement R54, but did so more than 150 calendar days after completing the verification in Requirement R65. OR The Responsible Entity failed to develop and implement a documented physical security plan(s) that covers its Transmission station(s), Transmission substation(s), and primary control center(s) identified in Requirement R54 and verified according to Requirement R65.

	Violation Severity Levels			
	Lower VSL	Moderate VSL	High VSL	Severe VSL
	verified according to Requirement R6~~5~~, but failed to include one of Parts ~~8~~9.1 through ~~8~~9.4 in the plan.	verified according to Requirement R6~~5~~, but failed to include two of Parts ~~8~~9.1 through ~~8~~9.4 in the plan.	verified according to Requirement R6~~5~~, but failed to include three of Parts ~~8~~9.1 through ~~8~~9.4 in the plan.	OR The Responsible Entity developed and implemented a documented physical security plan(s) that covers its Transmission station(s), Transmission substation(s), and primary control center(s) identified in Requirement R54 and verified according to Requirement R6~~5~~, but failed to include Parts ~~8~~9.1 through ~~8~~9.4 in the plan.
R10.	The Responsible Entity had an unaffiliated third party review the evaluation performed under Requirement R8~~7~~ and the security plan(s) developed under Requirement R9~~8~~, but did so in more than 90 calendar days, but less than or equal to 100 calendar days.	The Responsible Entity had an unaffiliated third party review the evaluation performed under Requirement R8~~7~~ and the security plan(s) developed under Requirement R9~~8~~, but did so in more than 100 calendar days, but less than or equal to 110 calendar days.	The Responsible Entity had an unaffiliated third party review the evaluation performed under Requirement R8~~7~~ and the security plan(s) developed under Requirement R9~~8~~, but did so more than 110 calendar days, but less than or equal to 120 calendar days.	The Responsible Entity failed to have an unaffiliated third party review the evaluation performed under Requirement R8~~7~~ and the security plan(s) developed under Requirement R9~~8~~ in more than 120 calendar days.

	Violation Severity Levels			
	Lower VSL	Moderate VSL	High VSL	Severe VSL
	OR The Responsible Entity had an unaffiliated third party review the evaluation performed under Requirement R8~~7~~ and the security plan(s) developed under Requirement R9~~8~~ and modified or documented the reason for not modifying the security plan(s) as specified in Part ~~9~~10.3, but did so more than 60 calendar days and less than or equal to 70 calendar days following completion of the third party review.	OR The Responsible Entity had an unaffiliated third party review the evaluation performed under Requirement R8~~7~~ and the security plan(s) developed under Requirement R9~~8~~ and modified or documented the reason for not modifying the security plan(s) as specified in Part ~~9~~10.3, but did so more than 70 calendar days and less than or equal to 80 calendar days following completion of the third party review.	OR The Responsible Entity had an unaffiliated third party review the evaluation performed under Requirement R8~~7~~ and the security plan(s) developed under Requirement R9~~8~~ and modified or documented the reason for not modifying the security plan(s) as specified in Part ~~9~~10.3, but did so more than 80 calendar days following completion of the third party review. OR The Responsible Entity had an unaffiliated third party review the evaluation performed under Requirement R8~~7~~ and the security plan(s) developed under Requirement R9~~8~~, but	OR The Responsible Entity failed to have an unaffiliated third party review the evaluation performed under Requirement R8~~7~~ and the security plan(s) developed under Requirement R9~~8~~. OR The Responsible Entity had an unaffiliated third party review the evaluation performed under Requirement R8~~7~~ and the security plan(s) developed under Requirement R9~~8~~, but failed to implement procedures for protecting information per Part ~~9~~10.4.

	Violation Severity Levels			
	Lower VSL	Moderate VSL	High VSL	Severe VSL
			did not document the reason for not modifying the security plan(s) as specified in Part ~~9~~10.3.	

D. Regional Variances

None.

E. Interpretations

None.

F. Associated Documents

CIP-014-4 Implementation Plan

CIP-014-4 Technical Rationale Document

Version History

Version	Date	Action	Change Tracking
1	October 1, 2015	Effective Date	New
2	April 16, 2015	Revised to meet FERC Order 802 directive to remove “widespread”.	Revision
2	May 7, 2015	Adopted by the NERC Board of Trustees	
2	July 14, 2015	FERC Letter Order in Docket No. RD15-4-000 approving CIP-014-2	
3	January 19, 2022	Revised to remove Compliance Section 1.4	Revision
3	June 16, 2022	FERC Letter Order in Docket No.RD22-3-000 approving Modifications to CIP-014-3	Revision
3	June 16,2022	Effective Date	Revision
4	TBD	Revisions made by the Project 2023-06 drafting team	Revision

Attachment 1 – Applicability Criteria

Applicable Transmission station(s) or Transmission substation(s) are those that meet any of the following criteria:

1. Transmission Facilities operated at 500 kV or higher. For the purpose of this criterion, the collector bus for a generation plant is not considered a Transmission Facility, but is part of the generation interconnection Facility.

2. Transmission Facilities that are operating between 200 kV and 499 kV at a single station or substation, where the station or substation is connected at 200 kV or higher voltages to three or more other Transmission stations or substations and has an "aggregate weighted value" exceeding 3000 according to the table below. The "aggregate weighted value" for a single station or substation is determined by summing the "weight value per line" shown in the table below for each incoming and each outgoing BES Transmission Line that is connected to another Transmission station or substation. For the purpose of this criterion, the collector bus for a generation plant is not considered a Transmission Facility, but is part of the generation interconnection Facility.

~~**2.1** Transmission station(s) or Transmission substation(s), that individually are not applicable, but are applicable when combined based on physical adjacency per Requirement R2, based on aggregated weighting value criteria from **Table 1** are to be considered as applicable.~~

Voltage Value of a Line	Weight Value per Line
less than 200 kV (not applicable)	(not applicable)
200 kV to 299 kV	700
300 kV to 499 kV	1300
500 kV and above	0

3. Transmission Facilities at a single station or substation location that are identified by its Reliability Coordinator, Planning Coordinator, or Transmission Planner as critical to the derivation of Interconnection Reliability Operating Limits (IROLs) and their associated contingencies.

4. Transmission Facilities identified as essential to meeting Nuclear Plant Interface Requirements.

Standard Development Timeline

This section is maintained by the drafting team during the development of the standard and will be removed when the standard is adopted by the NERC Board of Trustees (Board).

Description of Current Draft

CIP-014-4 is posted for a 45-day formal comment period with additional ballot.

Completed Actions	Date
Standards Committee approved Standard Authorization Request (SAR) for posting	June 21, 2023
SAR posted for comment	July 26, 2023 – August 24, 2023
Accepted Revised SAR	January 17, 2024

Anticipated Actions	Date
45-day formal or informal comment period with ballot	May 20, 2024 – July 3, 2024
45-day formal or informal comment period with additional ballot	September 23, 2024 – November 6, 2024
10-day final ballot	February 3, 2025 – February 12, 2025
Board adoption	April 4, 2025

New or Modified Term(s) Used in NERC Reliability Standards

This section includes all new or modified terms used in the proposed standard that will be included in the *Glossary of Terms Used in NERC Reliability Standards* upon applicable regulatory approval. Terms used in the proposed standard that are already defined and are not being modified can be found in the *Glossary of Terms Used in NERC Reliability Standards*. The new or revised terms listed below will be presented for approval with the proposed standard. Upon Board adoption, this section will be removed.

Term(s):

None.

A. Introduction

1. **Title:** Physical Security

2. **Number:** CIP-014-~~43~~

3. **Purpose:** To identify and protect Transmission stations and Transmission substations, and their associated primary control centers, that if rendered inoperable or damaged as a result of a physical attack could result in instability, uncontrolled separation, or Cascading within an Interconnection.

4. **Applicability:**

   4.1. Functional Entities:

   4.1.1 Transmission Owner that owns a Transmission station(s) or Transmission substation(s) that meet~~s~~ the applicability criteria of Attachment 1. ~~any of the following criteria:~~

   ~~**4.1.1.1** Transmission Facilities operated at 500 kV or higher. For the purpose of this criterion, the collector bus for a generation plant is not considered a Transmission Facility, but is part of the generation interconnection Facility.~~

   ~~**4.1.1.2** Transmission Facilities that are operating between 200 kV and 499 kV at a single station or substation, where the station or substation is connected at 200 kV or higher voltages to three or more other Transmission stations or substations and has an "aggregate weighted value" exceeding 3000 according to the table below. The "aggregate weighted value" for a single station or substation is determined by summing the "weight value per line" shown in the table below for each incoming and each outgoing BES Transmission Line that is connected to another Transmission station or substation. For the purpose of this criterion, the collector bus for a generation plant is not considered a Transmission Facility, but is part of the generation interconnection Facility.~~

~~Voltage Value of a Line~~	~~Weight Value per Line~~
~~less than 200 kV (not applicable)~~	~~(not applicable)~~
~~200 kV to 299 kV~~	~~700~~
~~300 kV to 499 kV~~	~~1300~~
~~500 kV and above~~	~~0~~

~~4.1.1.3 Transmission Facilities at a single station or substation location that are identified by its Reliability Coordinator, Planning Coordinator, or Transmission Planner as critical to the derivation of Interconnection Reliability Operating Limits (IROLs) and their associated contingencies.~~

~~4.1.1.4 Transmission Facilities identified as essential to meeting Nuclear Plant Interface Requirements.~~

4.1.2 Transmission Operator.

Exemption: Facilities in a "protected area," as defined in 10 C.F.R. § 73.2, within the scope of a security plan approved or accepted by the Nuclear Regulatory Commission are not subject to this Standard; or~~,~~ Facilities within the scope of a security plan approved or accepted by the Canadian Nuclear Safety Commission are not subject to this Standard.

5. Effective Dates:

See Implementation Plan for CIP-014-42.

~~**6. Background:**~~

~~This Reliability Standard addresses the directives from the FERC order issued March 7, 2014, *Reliability Standards for Physical Security Measures*, 146 FERC ¶ 61,166 (2014), which required NERC to develop a physical security reliability standard(s) to identify and protect facilities that if rendered inoperable or damaged could result in instability, uncontrolled separation, or Cascading within an Interconnection.~~

B. Requirements and Measures

R1. Each Transmission Owner, at least once every 36 calendar months, shall document a list of applicable Transmission station(s) and Transmission substation(s) meeting any of the criteria in Attachment 1 that are either existing or planned to be in service within 36 calendar months. *[Violation Risk Factor: High; Time-Horizon: Long-term Planning]*

M1. Examples of evidence may include, but are not limited to, dated written or electronic documentation of the Transmission stations and Transmission substations (existing and those planned to be in service within 36 calendar months) that meet any of the criteria in Attachment 1.

R2. Each Transmission Owner shall have documented criteria to determine those Transmission station(s) and Transmission substation(s), irrespective of ownership, within ½ mile of an applicable Transmission station or Transmission substation documented in Requirement R1, that could be impacted by a single physical attack. The criteria shall address at a minimum the following: *[Violation Risk Factor: Medium; Time-Horizon: Long-term Planning]*

2.1. Line of sight between multiple Transmission station(s) or Transmission substation(s) from a single location without obstruction.

2.2. Ease of access from a common roadway that exists between multiple Transmission station(s) or Transmission substation(s).

M2. Examples of evidence may include, but are not limited to, dated written or electronic documentation of the criteria established in Requirement R2.

R3. Each Transmission Owner shall have a documented risk assessment methodology, including criteria for steady-state and dynamic simulations, for evaluating the loss due to a physical attack of each applicable Transmission station(s) and Transmission substation(s) documented in Requirement R1 and Transmission substation(s) or Transmission station(s) determined to be in proximity per Requirement R2. The methodology shall include, at a minimum, the following: *[Violation Risk Factor: High; Time-Horizon: Long-term Planning]*

3.1. Technical supported thresholds and rationale for determining the amount of acceptable load loss, the amount of acceptable generation loss, post-event response, and any additional considerations recognized as resulting in instability, uncontrolled separation, or Cascading within an Interconnection. The technical rationale shall include:

3.1.1. Steady-state and dynamic system response to events that could lead to load loss, generation loss, and other unacceptable post-event response within an Interconnection.

3.2. Steady-state and dynamic simulations shall be performed under System conditions that are more likely to contribute to instability, uncontrolled separation, or Cascading within an Interconnection.

3.2.1. The simulations shall include the removal of all Elements that Protection Systems and other controls are expected to automatically disconnect for each event.

3.2.2. If steady-state and dynamic simulations each show acceptable system response but additional Elements trip during the dynamic simulation of an event, then additional steady-state analysis including any tripped Elements from the dynamic simulations shall be conducted.

3.3. For each applicable Transmission station or Transmission substation listed in accordance with Requirement R1, analysis shall include a Fault at the applicable Transmission station or Transmission substation and each Transmission station or Transmission substation identified in accordance with Requirement R2 as being in proximity to the applicable Transmission station or Transmission substation.

3.4. Fault simulations that assume the loss of communication and Protection System at the Transmission station(s) or Transmission substation(s) studied under Requirement R3, Parts 3.2 and 3.3.

3.4.1. Delayed (remote) clearing times shall be used unless otherwise technically substantiated.
3.4.2. Actual or more conservative estimates of clearing times shall be used unless otherwise technically substantiated.

M3. Each Transmission Owner shall provide dated evidence, such as electronic or hard copies, of risk assessment methodology satisfying Requirement R3.

R4. Each Transmission Owner with applicable Transmission station(s) and Transmission substation(s) per Requirement R1 owned by multiple Transmission Owners shall coordinate with those Transmission Owners to determine and document their individual and joint responsibilities for performing any required risk assessments per Requirement R5. *[VRF: Medium; Time-Horizon: Operations Planning, Long-term Planning]*

M4. Examples of acceptable evidence may include, but are not limited to, dated documentation, such as meeting minutes, agreements, and e-mail correspondence, that identifies that agreement has been reached on individual and joint responsibilities for performing the required risk assessments.

R5. At least once every 36 calendar months, each Transmission Owner shall perform a risk assessment to identify Transmission station(s) and Transmission substation(s) that if rendered inoperable or damaged as a result of a physical attack could result in

instability, uncontrolled separation, or Cascading within an Interconnection, using the methodology established in Requirement R3 including any Transmission station(s) and Transmission substation(s) identified in accordance with documentation established per Requirement R4. *[VRF: High; Time-Horizon: Operations Planning, Long-term Planning]*

5.1. A Transmission station and Transmission substation identified in dynamic or steady-state simulations as causing instability, uncontrolled separation, or Cascading within an Interconnection when rendered inoperable or damaged as a result of a physical attack does not require any additional simulations during the current risk assessment.

5.2. The Transmission Owner shall identify the primary control center that operationally controls each Transmission station or Transmission substation identified in the Requirement R5 risk assessment.

M5. Examples of acceptable evidence may include, but are not limited to, dated written or electronic documentation of the risk assessment satisfying Requirement R5. For Requirement R5, Part 5.2, examples of acceptable evidence may include, but are not limited to, dated written or electronic documentation of the identification of the primary control center that operationally controls each identified Transmission station or Transmission substation.

~~**R1.** Each Transmission Owner shall perform an initial risk assessment and subsequent risk assessments of its Transmission stations and Transmission substations (existing and planned to be in service within 24 months) that meet the criteria specified in Applicability Section 4.1.1. The initial and subsequent risk assessments shall consist of a transmission analysis or transmission analyses designed to identify the Transmission station(s) and Transmission substation(s) that if rendered inoperable or damaged could result in instability, uncontrolled separation, or Cascading within an Interconnection. *[VRF: High; Time-Horizon: Long-term Planning]*~~

~~**1.1.** Subsequent risk assessments shall be performed:~~

- ~~At least once every 30 calendar months for a Transmission Owner that has identified in its previous risk assessment (as verified according to Requirement R2) one or more Transmission stations or Transmission substations that if rendered inoperable or damaged could result in instability, uncontrolled separation, or Cascading within an Interconnection; or~~
- ~~At least once every 60 calendar months for a Transmission Owner that has not identified in its previous risk assessment (as verified according to Requirement R2) any Transmission stations or Transmission substations that if rendered inoperable or damaged could result in instability, uncontrolled separation, or Cascading within an Interconnection.~~

~~1.2. The Transmission Owner shall identify the primary control center that operationally controls each Transmission station or Transmission substation identified in the Requirement R1 risk assessment.~~

~~M1. Examples of acceptable evidence may include, but are not limited to, dated written or electronic documentation of the risk assessment of its Transmission stations and Transmission substations (existing and planned to be in service within 24 months) that meet the criteria in Applicability Section 4.1.1 as specified in Requirement R1. Additionally, examples of acceptable evidence may include, but are not limited to, dated written or electronic documentation of the identification of the primary control center that operationally controls each Transmission station or Transmission substation identified in the Requirement R1 risk assessment as specified in Requirement R1, Part 1.2.~~

~~R2.~~R6. Each Transmission Owner shall have an unaffiliated third party verify the risk assessment performed under Requirement R5~~1~~. The verification may occur concurrent with or after the risk assessment performed under Requirement R5~~1~~. *[VRF: Medium; Time-Horizon: Long-term Planning]*

~~2.1.~~6.1. Each Transmission Owner shall select an unaffiliated verifying entity that is either:

- 6.1.1. A registered Planning Coordinator, Transmission Planner, or Reliability Coordinator; or
- 6.1.2. An entity that has transmission planning or analysis experience.

~~2.2.~~6.2. The unaffiliated third party verification shall verify the Transmission Owner's risk assessment performed under Requirement R1, which may include recommendations for the addition or deletion of a Transmission station(s) or Transmission substation(s). The Transmission Owner shall ensure the verification is completed within 90 calendar days following the completion of the Requirement R5~~1~~ risk assessment.

~~2.3.~~6.3. If the unaffiliated verifying entity recommends that the Transmission Owner add a Transmission station(s) or Transmission substation(s) to, or remove a Transmission station(s) or Transmission substation(s) from, its identification under Requirement R5~~1~~, the Transmission Owner shall either, within 60 calendar days of completion of the verification, for each recommended addition or removal of a Transmission station or Transmission substation:

- 6.3.1. Modify its identification under Requirement R5~~1~~ consistent with the recommendation; or
- 6.3.2. Document the technical basis for not modifying the identification in accordance with the recommendation.

~~2.4.~~6.4. Each Transmission Owner shall implement procedures, such as the use of non-disclosure agreements, for protecting sensitive or confidential information made available to the unaffiliated third party verifier and to protect or exempt sensitive or confidential information developed pursuant to this Reliability Standard from public disclosure.

M6~~2~~. Examples of acceptable evidence may include, but are not limited to, dated written or electronic documentation that the Transmission Owner completed an unaffiliated third party verification of the Requirement R5~~1~~ risk assessment and satisfied all of the applicable provisions of Requirement R6~~2~~, including, if applicable, documenting the technical basis for not modifying the Requirement R1, R2, R3, R4 and R5 identification as specified under Part 6~~2~~.3. Additionally, examples of evidence may include, but are not limited to, written or electronic documentation of procedures to protect information under Part 6~~2~~.4.

~~R3.~~R7. For a primary control center(s) identified by the Transmission Owner according to Requirement R5~~1~~, Part 5~~1~~.2 that a) operationally controls an identified Transmission station or Transmission substation verified according to Requirement R5~~2~~, and b) is not under the operational control of the Transmission Owner: the Transmission Owner shall, within seven calendar days following completion of Requirement R5~~2~~, notify the Transmission Operator that has operational control of the primary control center of such identification and the date of completion of Requirement R5~~2~~. *[VRF: Lower; Time-Horizon: Long-term Planning]*

~~3.1.~~7.1. If a Transmission station or Transmission substation previously identified under Requirement R1, R2, R3, R4, and R5 and verified according to Requirement R6~~2~~ is removed from the identification during a subsequent risk assessment performed according to Requirement ~~R1~~ R5 or a verification according to Requirement R6~~2~~, then the Transmission Owner shall, within seven calendar days following the verification or the subsequent risk assessment, notify the Transmission Operator that has operational control of the primary control center of the removal.

M7~~3~~. Examples of acceptable evidence may include, but are not limited to, dated written or electronic notifications or communications that the Transmission Owner notified each Transmission Operator, as applicable, according to Requirement R7~~3~~.

~~R4.~~R8. Each Transmission Owner that identified a Transmission station, Transmission substation, or a primary control center in Requirement R5~~1~~ and verified according to Requirement R6~~2~~, and each Transmission Operator notified by a Transmission Owner according to Requirement R7~~3~~, shall conduct an evaluation of the potential threats and vulnerabilities of a physical attack to each of their respective Transmission station(s), Transmission substation(s), and primary control center(s) identified in Requirement R5~~1~~ and verified according to Requirement R6~~2~~. The evaluation shall consider the following: *[VRF: Medium; Time-Horizon: Operations Planning, Long-term Planning]*

~~4.1.~~8.1. Unique characteristics of the identified and verified Transmission station(s), Transmission substation(s), and primary control center(s);

~~4.2.~~8.2. Prior history of attack on similar facilities taking into account the frequency, geographic proximity, and severity of past physical security related events; and

~~4.3.~~8.3. Intelligence or threat warnings received from sources such as law enforcement, the Electric Reliability Organization (ERO), the Electricity Sector Information Sharing and Analysis Center (ES-ISAC), U.S. federal and/or Canadian governmental agencies, or their successors.

M8~~4~~. Examples of evidence may include, but are not limited to, dated written or electronic documentation that the Transmission Owner or Transmission Operator conducted an evaluation of the potential threats and vulnerabilities of a physical attack to their respective Transmission station(s), Transmission substation(s) and primary control center(s) as specified in Requirement R8~~4~~.

~~R5.~~R9. Each Transmission Owner that identified a Transmission station, Transmission substation, or primary control center in Requirement R5~~1~~ and verified according to Requirement R6~~2~~, and each Transmission Operator notified by a Transmission Owner according to Requirement R7~~3~~, shall develop and implement a documented physical security plan(s) that covers their respective Transmission station(s), Transmission substation(s), and primary control center(s). The physical security plan(s) shall be developed within 120 calendar days following the completion of Requirement R6~~2~~ and executed according to the timeline specified in the physical security plan(s). The physical security plan(s) shall include the following attributes: *[VRF: High; Time-Horizon: Long-term Planning]*

~~5.1.~~9.1. Resiliency or security measures designed collectively to deter, detect, delay, assess, communicate, and respond to potential physical threats and vulnerabilities identified during the evaluation conducted in Requirement ~~R4~~R8.

~~5.2.~~9.2. Law enforcement contact and coordination information.

~~5.3.~~9.3. A timeline for executing the physical security enhancements and modifications specified in the physical security plan.

~~5.4.~~9.4. Provisions to evaluate evolving physical threats, and their corresponding security measures, to the Transmission station(s), Transmission substation(s), or primary control center(s).

M9~~5~~. Examples of evidence may include, but are not limited to, dated written or electronic documentation of its physical security plan(s) that covers their respective identified and verified Transmission station(s), Transmission substation(s), and primary control center(s) as specified in Requirement R6~~5~~, and additional evidence

demonstrating execution of the physical security plan according to the timeline specified in the physical security plan.

~~R6.~~R10. Each Transmission Owner that identified a Transmission station, Transmission substation, or primary control center in Requirement R~~5~~1 and verified according to Requirement R~~6~~2, and each Transmission Operator notified by a Transmission Owner according to Requirement R~~7~~3, shall have an unaffiliated third party review the evaluation performed under Requirement R~~8~~4 and the security plan(s) developed under Requirement R~~9~~5. The review may occur concurrently with or after completion of the evaluation performed under Requirement R~~8~~4 and the security plan development under Requirement R~~9~~5. *[VRF: Medium; Time-Horizon: Long-term Planning]*

~~6.1.~~10.1. Each Transmission Owner and Transmission Operator shall select an unaffiliated third party reviewer from the following:

- An entity or organization with electric industry physical security experience and whose review staff has at least one member who holds either a Certified Protection Professional (CPP) or Physical Security Professional (PSP) certification.
- An entity or organization approved by the ERO.
- A governmental agency with physical security expertise.
- An entity or organization with demonstrated law enforcement, government, or military physical security expertise.

~~6.2.~~10.2. The Transmission Owner or Transmission Operator, respectively, shall ensure that the unaffiliated third party review is completed within 90 calendar days of completing the security plan(s) developed in Requirement R~~9~~5. The unaffiliated third party review may, but is not required to, include recommended changes to the evaluation performed under Requirement R~~8~~4 or the security plan(s) developed under Requirement R~~9~~5.

~~6.3.~~10.3. If the unaffiliated third party reviewer recommends changes to the evaluation performed under Requirement R~~8~~4 or security plan(s) developed under Requirement R~~9~~5, the Transmission Owner or Transmission Operator shall, within 60 calendar days of the completion of the unaffiliated third party review, for each recommendation:

- Modify its evaluation or security plan(s) consistent with the recommendation; or
- Document the reason(s) for not modifying the evaluation or security plan(s) consistent with the recommendation.

~~6.4.~~10.4. Each Transmission Owner and Transmission Operator shall implement procedures, such as the use of non-disclosure agreements, for protecting sensitive or confidential information made available to the unaffiliated third party reviewer and to protect or exempt sensitive or confidential information developed pursuant to this Reliability Standard from public disclosure.

M10~~6~~. Examples of evidence may include, but are not limited to, written or electronic documentation that the Transmission Owner or Transmission Operator had an unaffiliated third party review the evaluation performed under Requirement R8~~4~~ and the security plan(s) developed under Requirement R9~~5~~ as specified in Requirement R10~~6~~ including, if applicable, documenting the reasons for not modifying the evaluation or security plan(s) in accordance with a recommendation under Part 10~~6~~.3. Additionally, examples of evidence may include, but are not limited to, written or electronic documentation of procedures to protect information under Part 10~~6~~.4.

C. Compliance

1. Compliance Monitoring Process

1.1. Compliance Enforcement Authority: "Compliance Enforcement Authority" means NERC or the Regional Entity, or any entity as otherwise designated by an Applicable Governmental Authority, in their respective roles of monitoring and/or enforcing compliance with mandatory and enforceable Reliability Standards in their respective jurisdictions.

~~As defined in the NERC Rules of Procedure, "Compliance Enforcement Authority" (CEA) means NERC or the Regional Entity in their respective roles of monitoring and enforcing compliance with the NERC Reliability Standards.~~

1.2. Evidence Retention:

The following evidence retention periods identify the period of time an entity is required to retain specific evidence to demonstrate compliance. For instances where the evidence retention period specified below is shorter than the time since the last audit, the CEA may ask an entity to provide other evidence during an on-site visit to show that it was compliant for the full time period since the last audit.

The Transmission Owner and Transmission Operator shall keep data or evidence to show compliance, as identified below, unless directed by its Compliance Enforcement Authority (CEA) to retain specific evidence for a longer period of time as part of an investigation.

The responsible entities shall retain ~~documentation as~~ evidence, as per Requirements R1 through R10, for three years.

If a Responsible Entity is found non-compliant, it shall keep information related to the non-compliance until mitigation is complete and approved, or for the time specified above, whichever is longer.

The Compliance Enforcement Authority shall keep the last audit records and all requested and submitted subsequent audit records.

~~The CEA shall keep the last audit records and all requested and submitted subsequent audit records, subject to the confidentiality provisions of Section 1500 of the Rules of Procedure and the provisions of Section 1.4 below.~~

1.3. Compliance Monitoring and Enforcement Program~~Assessment Processes~~: As defined in the NERC Rules of Procedure, "Compliance Monitoring and Enforcement Program" refers to the identification of the processes that will be used to evaluate data or information for the purpose of assessing performance or outcomes with the associated Reliability Standard.

~~Compliance Audits~~

~~Self-Certifications~~

~~Spot Checking~~

~~Compliance Violation Investigations~~

~~Self-Reporting~~

~~Complaints Text~~

Violation Severity Levels

~~2. Table of Compliance Elements~~

R #	~~Time Horizon~~	~~VRF~~	Violation Severity Levels (CIP-014-~~3~~4)			
			Lower VSL	Moderate VSL	High VSL	Severe VSL
R1	~~Long-term Planning~~	~~High~~	The Transmission Owner documented a list of applicable Transmission station(s) or Transmission substation(s) per Attachment 1 but did so after 36 calendar months but less than or equal to 38 calendar months. OR The Transmission Owner documented a list of applicable Transmission station(s) or Transmission substation(s), but failed to identify less than or equal	The Transmission Owner documented a list of applicable Transmission station(s) or Transmission substation(s) per Attachment 1 but did so after 38 calendar months but less than or equal to 40 calendar months. OR The Transmission Owner documented a list of applicable Transmission station(s) or Transmission substation(s), but failed to identify more than 10% and less than or equal to	The Transmission Owner documented a list of applicable Transmission station(s) or Transmission substation(s) per Attachment 1 but did so after 40 calendar months but less than or equal to 42 calendar months. OR The Transmission Owner documented a list of applicable Transmission station(s) or Transmission substation(s), but failed to identify more than 20% and less than or equal to 30% of the applicable Transmission station(s)	The Transmission Owner failed to document a list of applicable Transmission station(s) or Transmission substation(s) per Attachment 1. OR The Transmission Owner documented a list of applicable Transmission station(s) or Transmission substation(s) per Attachment 1 but did so after more than 42 calendar months. OR

R #	~~Time Horizon~~	~~VRF~~	Violation Severity Levels (CIP-014-~~3~~4)			
			Lower VSL	Moderate VSL	High VSL	Severe VSL
			to 10% of the applicable Transmission station(s) or Transmission substation(s) per Attachment 1.	20% of the applicable Transmission station(s) or Transmission substation(s) per Attachment 1.	or Transmission substation(s) per Attachment 1.	The Transmission Owner identified a list of applicable Transmission station(s) or Transmission substation(s), but failed to identify more than 30% of the applicable Transmission station(s) or Transmission substation(s) per Attachment 1.
R2	~~Long-term Planning~~	~~Medium~~				The Transmission Owner did not have documented criteria to determine when Transmission station(s) or Transmission substation(s) were in proximity for those identified in Requirement R1. OR

R #	~~Time Horizon~~	~~VRF~~	Violation Severity Levels (CIP-014-~~34~~)			
			Lower VSL	Moderate VSL	High VSL	Severe VSL
						The Transmission Owner failed to use the documented criteria to identify which Transmission station(s) or Transmission substation(s) are in proximity to each other.
R3	~~Long-term Planning~~	~~Lower~~	The Transmission Owner has a risk assessment methodology that failed to include one of the requirements listed in Parts 3.1 through 3.4.	The Transmission Owner has a risk assessment methodology that failed to include two of the requirements listed in Parts 3.1 through 3.4.	The Transmission Owner has a risk assessment methodology that failed to include three or more of the requirements listed in Parts 3.1 through 3.4.	The Transmission Owner has a risk assessment methodology that failed to include four of the requirements listed in Parts 3.1 through 3.4. OR The Transmission Owner does not have a risk assessment methodology.
R4	~~Operations Planning, Long-~~	~~Medium~~	The Transmission Owner failed to coordinate less than or equal to 25% of	The Transmission Owner failed to coordinate more than 25% and less than or	The Transmission Owner failed to coordinate more than 50% and less	The Transmission Owner failed to coordinate more than 75% and less

R #	~~Time Horizon~~	~~VRF~~	Violation Severity Levels (CIP-014-~~34~~)			
			Lower VSL	Moderate VSL	High VSL	Severe VSL
	~~term Planning~~		jointly owned applicable Transmission station(s) and Transmission substation(s) with other owner(s).	equal to 50% of jointly owned applicable Transmission station(s) and Transmission substation(s) with other owner(s).	than or equal to 75% of jointly owned applicable Transmission station(s) and Transmission substation(s) with other owner(s).	than or equal to 100% any evidence of jointly owned applicable Transmission station(s) and Transmission substation(s) with other owner(s).
R5	~~Operations Planning, Long-term Planning~~	~~Medium~~	The Transmission Owner performed a risk assessment, but did so after 36 calendar months, but less than or equal to 38 calendar months. OR The Transmission Owner performed a risk assessment inconsistent with one of the methodology requirements listed in Requirement R3,	The Transmission Owner performed a risk assessment, but did so after 38 calendar months, but less than or equal to 40 calendar months. OR The Transmission Owner performed a risk assessment inconsistent with two of the methodology requirements listed in Requirement R3,	The Transmission owner performed a risk assessment, but did so after 40 calendar months, but less than or equal to 42 calendar months. OR The Transmission Owner performed a risk assessment inconsistent with three or more of the methodology requirements listed in Requirement R3, Parts 3.1 through 3.4. OR	The Transmission Owner performed a risk assessment, but did so after more than 42 calendar months. OR The Transmission Owner performed a risk assessment inconsistent with four of the methodology requirements listed in Requirement R3, Parts 3.1 through 3.4.

R #	~~Time Horizon~~	~~VRF~~	Violation Severity Levels (CIP-014-~~34~~)			
			Lower VSL	Moderate VSL	High VSL	Severe VSL
			Parts 3.1 through 3.4.	Parts 3.1 through 3.4.	The Transmission Owner performed a risk assessment, but failed to include the primary control center identified in Part 5.2.	
~~R1~~	~~Long-term Planning~~	~~High~~	~~The Transmission Owner performed an initial risk assessment but did so after the date specified in the implementation plan for performing the initial risk assessment but less than or equal to two calendar months after that date;~~ ~~OR~~ ~~The Transmission Owner that has identified in its previous risk assessment one or more Transmission~~	~~The Transmission Owner performed an initial risk assessment but did so more than two calendar months after the date specified in the implementation plan for performing the initial risk assessment but less than or equal to four calendar months after that date;~~ ~~OR~~ ~~The Transmission Owner that has identified in its previous risk assessment one or~~	~~The Transmission Owner performed an initial risk assessment but did so more than four calendar months after the date specified in the implementation plan for performing the initial risk assessment but less than or equal to six calendar months after that date;~~ ~~OR~~ ~~The Transmission Owner that has identified in its previous risk assessment one or more Transmission~~	~~The Transmission Owner performed an initial risk assessment but did so more than six calendar months after the date specified in the implementation plan for performing the initial risk assessment;~~ ~~OR~~ ~~The Transmission Owner failed to perform an initial risk assessment;~~ ~~OR~~

R #	Time Horizon	VRF	Violation Severity Levels (CIP-014-34)			
			Lower VSL	Moderate VSL	High VSL	Severe VSL
			stations or Transmission substations that if rendered inoperable or damaged could result in instability, uncontrolled separation, or Cascading within an Interconnection performed a subsequent risk assessment but did so after 30 calendar months but less than or equal to 32 calendar months; OR The Transmission Owner that has not identified in its previous risk assessment any Transmission stations or Transmission substations that if rendered inoperable	more Transmission stations or Transmission substations that if rendered inoperable or damaged could result in instability, uncontrolled separation, or Cascading within an Interconnection performed a subsequent risk assessment but did so after 32 calendar months but less than or equal to 34 calendar months; OR The Transmission Owner that has not identified in its previous risk assessment any Transmission stations or Transmission substations that if rendered inoperable	stations or Transmission substations that if rendered inoperable or damaged could result in instability, uncontrolled separation, or Cascading within an Interconnection performed a subsequent risk assessment but did so after 34 calendar months but less than or equal to 36 calendar months; OR The Transmission Owner that has not identified in its previous risk assessment any Transmission stations or Transmission substations that if rendered inoperable or damaged could	The Transmission Owner that has identified in its previous risk assessment one or more Transmission stations or Transmission substations that if rendered inoperable or damaged could result in instability, uncontrolled separation, or Cascading within an Interconnection performed a subsequent risk assessment but did so after more than 36 calendar months; OR The Transmission Owner that has identified in its previous risk assessment one or more Transmission

R #	Time Horizon	VRF	Violation Severity Levels (CIP-014-34)			
			Lower VSL	Moderate VSL	High VSL	Severe VSL
			or damaged could result in instability, uncontrolled separation, or Cascading within an Interconnection performed a subsequent risk assessment but did so after 60 calendar months but less than or equal to 62 calendar months.	or damaged could result in instability, uncontrolled separation, or Cascading within an Interconnection performed a subsequent risk assessment but did so after 62 calendar months but less than or equal to 64 calendar months.	result in instability, uncontrolled separation, or Cascading within an Interconnection performed a subsequent risk assessment but did so after 64 calendar months but less than or equal to 66 calendar months; OR The Transmission Owner performed a risk assessment but failed to include Part 1.2.	stations or Transmission substations that if rendered inoperable or damaged could result in instability, uncontrolled separation, or Cascading within an Interconnection failed to perform a risk assessment; OR The Transmission Owner that has not identified in its previous risk assessment any Transmission stations or Transmission substations that if rendered inoperable or damaged could result in instability, uncontrolled separation, or Cascading within an

R #	~~Time Horizon~~	~~VRF~~	Violation Severity Levels (CIP-014-~~34~~)			
			Lower VSL	Moderate VSL	High VSL	Severe VSL
						~~Interconnection performed a subsequent risk assessment but did so after more than 66 calendar months;~~ ~~OR~~ ~~The Transmission Owner that has not identified in its previous risk assessment any Transmission station and Transmission substations that if rendered inoperable or damaged could result in instability, uncontrolled separation, or Cascading within an Interconnection failed to perform a subsequent risk assessment.~~
R6 ~~2~~	~~Long-term Planning~~	~~Medium~~	The Transmission Owner had an unaffiliated third	The Transmission Owner had an unaffiliated third	The Transmission Owner had an unaffiliated third party	The Transmission Owner had an unaffiliated third

R #	~~Time Horizon~~	~~VRF~~	Violation Severity Levels (CIP-014-~~3~~4)			
			Lower VSL	Moderate VSL	High VSL	Severe VSL
			party verify the risk assessment performed under Requirement ~~R1~~ R5, but did so in more than 90 calendar days but less than or equal to 100 calendar days following completion of Requirement R5~~1~~.; OR The Transmission Owner had an unaffiliated third party verify the risk assessment performed under Requirement R5~~1~~ and modified or documented the technical basis for not modifying its identification under Requirement R5~~1~~ as required by Part 6.3~~2.3~~ but did so more than 60 calendar days and	party verify the risk assessment performed under Requirement ~~R1~~ R5 but did so more than 100 calendar days but less than or equal to 110 calendar days following completion of Requirement R5~~1~~.; OR~~r~~ The Transmission Owner had an unaffiliated third party verify the risk assessment performed under Requirement R5~~1~~ and modified or documented the technical basis for not modifying its identification under Requirement R5~~1~~ as required by Part ~~2.3~~6.3 but did so more than 70 calendar days and	verify the risk assessment performed under Requirement ~~R1~~ R5 but did so more than 110 calendar days but less than or equal to 120 calendar days following completion of Requirement R5~~1~~.; OR The Transmission Owner had an unaffiliated third party verify the risk assessment performed under Requirement R5~~1~~ and modified or documented the technical basis for not modifying its identification under Requirement R1 as required by Part ~~2.3~~ 6.3 but did so more than 80 calendar days from completion of	party verify the risk assessment performed under Requirement ~~R1~~ R5 but did so more than 120 calendar days following completion of Requirement R5~~1~~.; OR The Transmission Owner failed to have an unaffiliated third party verify the risk assessment performed under Requirement R5~~1~~.; OR The Transmission Owner had an unaffiliated third party verify the risk assessment performed under Requirement R5~~1~~ but failed to implement procedures for

R #	Time Horizon	VRF	Violation Severity Levels (CIP-014-34)			
			Lower VSL	Moderate VSL	High VSL	Severe VSL
			less than or equal to 70 calendar days from completion of the third party verification.	less than or equal to 80 calendar days from completion of the third party verification.	the third party verification.; OR The Transmission Owner had an unaffiliated third party verify the risk assessment performed under Requirement R1 but failed to modify or document the technical basis for not modifying its identification under R1 R5 as required by Part 2.36.3.	protecting information per Part 2.46.4.
R7 3	Long-term Planning	Lower	The Transmission Owner notified the Transmission Operator that operates the primary control center as specified in Requirement R73 but did so more than seven calendar days and less than or equal to nine calendar days	The Transmission Owner notified the Transmission Operator that operates the primary control center as specified in Requirement R73 but did so more than nine calendar days and less than or equal to 11 calendar days	The Transmission Owner notified the Transmission Operator that operates the primary control center as specified in Requirement R73 but did so more than 11 calendar days and less than or equal to 13 calendar days following the	The Transmission Owner notified the Transmission Operator that operates the primary control center as specified in Requirement R73 but did so more than 13 calendar days following the

R #	~~Time Horizon~~	~~VRF~~	Violation Severity Levels (CIP-014-~~3~~4)			
			Lower VSL	Moderate VSL	High VSL	Severe VSL
			following the completion of Requirement R6~~2~~.~~;~~ OR The Transmission Owner notified the Transmission Operator that operates the primary control center of the removal from the identification in Requirement R5~~1~~ but did so more than seven calendar days and less than or equal to nine calendar days following the verification or the subsequent risk assessment.	following the completion of Requirement R6~~2~~.~~;~~ OR The Transmission Owner notified the Transmission Operator that operates the primary control center of the removal from the identification in Requirement R5~~1~~ but did so more than nine calendar days and less than or equal to 11 calendar days following the verification or the subsequent risk assessment.	completion of Requirement R6~~2~~.~~;~~ OR The Transmission Owner notified the Transmission Operator that operates the primary control center of the removal from the identification in Requirement R5~~1~~ but did so more than 11 calendar days and less than or equal to 13 calendar days following the verification or the subsequent risk assessment.	completion of Requirement R6~~2~~.~~;~~ OR The Transmission Owner failed to notify the Transmission Operator that it operates a control center identified in Requirement R5~~1~~.~~;~~ OR The Transmission Owner notified the Transmission Operator that operates the primary control center of the removal from the identification in Requirement R5~~1~~ but did so more than 13 calendar days following the verification or the subsequent risk assessment.

R #	Time Horizon	VRF	Violation Severity Levels (CIP-014-34)			
			Lower VSL	Moderate VSL	High VSL	Severe VSL
						OR The Transmission Owner failed to notify the Transmission Operator that operates the primary control center of the removal from the identification in Requirement R51.
R84	Operations Planning, Long-term Planning	Medium	N/A	The Responsible Entity conducted an evaluation of the potential physical threats and vulnerabilities to each of its Transmission station(s), Transmission substation(s), and primary control center(s) identified in Requirement R51 but failed to consider one of Parts 84.1 through	The Responsible Entity conducted an evaluation of the potential physical threats and vulnerabilities to each of its Transmission station(s), Transmission substation(s), and primary control center(s) identified in Requirement R51 but failed to consider two of Parts 84.1 through	The Responsible Entity failed to conduct an evaluation of the potential physical threats and vulnerabilities to each of its Transmission station(s), Transmission substation(s), and primary control center(s) identified in Requirement R51.; OR

R #	Time Horizon	VRF	Violation Severity Levels (CIP-014-34)			
			Lower VSL	Moderate VSL	High VSL	Severe VSL
				84.3 in the evaluation.	84.3 in the evaluation.	The Responsible Entity conducted an evaluation of the potential physical threats and vulnerabilities to each of its Transmission station(s), Transmission substation(s), and primary control center(s) identified in Requirement R51 but failed to consider Parts 84.1 through 84.3.
R95	Long-term Planning	High	The Responsible Entity developed and implemented a documented physical security plan(s) that covers each of its Transmission station(s), Transmission substation(s), and primary control	The Responsible Entity developed and implemented a documented physical security plan(s) that covers each of its Transmission station(s), Transmission substation(s), and primary control	The Responsible Entity developed and implemented a documented physical security plan(s) that covers each of its Transmission station(s), Transmission substation(s), and primary control	The Responsible Entity developed and implemented a documented physical security plan(s) that covers each of its Transmission station(s), Transmission substation(s), and

R #	~~Time Horizon~~	~~VRF~~	Violation Severity Levels (CIP-014-~~3~~4)			
			Lower VSL	Moderate VSL	High VSL	Severe VSL
			center(s) identified in Requirement ~~R1~~ R5 but did so more than 120 calendar days but less than or equal to 130 calendar days after completing Requirement R6~~2~~.; OR The Responsible Entity developed and implemented a documented physical security plan(s) that covers its Transmission station(s), Transmission substation(s), and primary control center(s) identified in Requirement R5~~1~~ and verified according to Requirement R6~~2~~ but failed to include one of Parts 9~~5~~.1 through 9~~5~~.4 in the plan.	center(s) identified in Requirement R5~~1~~ but did so more than 130 calendar days but less than or equal to 140 calendar days after completing Requirement R6~~2~~.; OR The Responsible Entity developed and implemented a documented physical security plan(s) that covers its Transmission station(s), Transmission substation(s), and primary control center(s) identified in Requirement R5~~1~~ and verified according to Requirement R6~~2~~ but failed to include two of Parts 9~~5~~.1 through 9~~5~~.4 in the plan.	center(s) identified in Requirement R5~~1~~ but did so more than 140 calendar days but less than or equal to 150 calendar days after completing Requirement R6~~2~~.; OR The Responsible Entity developed and implemented a documented physical security plan(s) that covers its Transmission station(s), Transmission substation(s), and primary control center(s) identified in Requirement R5~~1~~ and verified according to Requirement R6~~2~~ but failed to include three of Parts 9~~5~~.1 through 9~~5~~.4 in the plan.	primary control center(s) identified in Requirement R5~~1~~ but did so more than 150 calendar days after completing the verification in Requirement R6~~2~~.; OR The Responsible Entity failed to develop and implement a documented physical security plan(s) that covers its Transmission station(s), Transmission substation(s), and primary control center(s) identified in Requirement R5~~1~~ and verified according to Requirement R6~~2~~. OR

R #	~~Time Horizon~~	~~VRF~~	Violation Severity Levels (CIP-014-~~3~~4)			
			Lower VSL	Moderate VSL	High VSL	Severe VSL
						The Responsible Entity developed and implemented a documented physical security plan(s) that covers its Transmission station(s), Transmission substation(s), and primary control center(s) identified in Requirement R5~~1~~ and verified according to Requirement R6~~2~~ but failed to include Parts 9~~5~~.1 through 9~~5~~.4 in the plan.
R1 0 ~~6~~	~~Long-term Planning~~	~~Medium~~	The Responsible Entity had an unaffiliated third party review the evaluation performed under Requirement R8~~4~~ and the security plan(s) developed under Requirement	The Responsible Entity had an unaffiliated third party review the evaluation performed under Requirement R8~~4~~ and the security plan(s) developed under Requirement	The Responsible Entity had an unaffiliated third party review the evaluation performed under Requirement R8~~4~~ and the security plan(s) developed under Requirement R9~~5~~ but did so more	The Responsible Entity failed to have an unaffiliated third party review the evaluation performed under Requirement R8~~4~~ and the security plan(s) developed

R #	Time Horizon	VRF	Violation Severity Levels (CIP-014-34)			
			Lower VSL	Moderate VSL	High VSL	Severe VSL
			R95 but did so in more than 90 calendar days but less than or equal to 100 calendar days.; OR The Responsible Entity had an unaffiliated third party review the evaluation performed under Requirement R84 and the security plan(s) developed under Requirement R95 and modified or documented the reason for not modifying the security plan(s) as specified in Part 106.3 but did so more than 60 calendar days and less than or equal to 70 calendar days following completion	R95 but did so in more than 100 calendar days but less than or equal to 110 calendar days.; OR The Responsible Entity had an unaffiliated third party review the evaluation performed under Requirement R84 and the security plan(s) developed under Requirement R95 and modified or documented the reason for not modifying the security plan(s) as specified in Part 106.3 but did so more than 70 calendar days and less than or equal to 80 calendar days following completion	than 110 calendar days but less than or equal to 120 calendar days.; OR The Responsible Entity had an unaffiliated third party review the evaluation performed under Requirement R84 and the security plan(s) developed under Requirement R95 and modified or documented the reason for not modifying the security plan(s) as specified in Part 106.3 but did so more than 80 calendar days following completion of the third party review.; OR The Responsible Entity had an unaffiliated third party review the evaluation performed	under Requirement R95 in more than 120 calendar days.; OR The Responsible Entity failed to have an unaffiliated third party review the evaluation performed under Requirement R84 and the security plan(s) developed under Requirement R95.; OR The Responsible Entity had an unaffiliated third party review the evaluation performed under Requirement R84 and the security plan(s) developed under Requirement R95 but failed to implement

R #	Time Horizon	VRF	Violation Severity Levels (CIP-014-34)			
			Lower VSL	Moderate VSL	High VSL	Severe VSL
			of the third party review.	of the third party review.	under Requirement R84 and the security plan(s) developed under Requirement R5 R9but did not document the reason for not modifying the security plan(s) as specified in Part 106.3.	procedures for protecting information per Part 106.4.

D. Regional Variances

None.

E. Interpretations

None.

F. Associated Documents

CIP-014-4 Implementation Plan

CIP-014-4 Technical Rationale Document

~~None.~~

Version History

Version	Date	Action	Change Tracking
1	October 1, 2015	Effective Date	New
2	April 16, 2015	Revised to meet FERC Order 802 directive to remove “widespread”.	Revision
2	May 7, 2015	Adopted by the NERC Board of Trustees	
2	July 14, 2015	FERC Letter Order in Docket No. RD15-4-000 approving CIP-014-2	
3	January 19, 2022	Revised to remove Compliance Section 1.4	Revision
3	June 16, 2022	FERC Letter Order in Docket No.RD22-3-000 approving Modifications to CIP-014-3	Revision
3	June 16,2022	Effective Date	Revision
4	TBD	Adopted by NERC Board of Trustees	Revision

~~Guidelines and Technical Basis~~

~~Section 4 Applicability~~

~~The purpose of Reliability Standard CIP-014 is to protect Transmission stations and Transmission substations, and their associated primary control centers that if rendered inoperable or damaged as a result of a physical attack could result in instability, uncontrolled~~

~~separation, or Cascading within an Interconnection. To properly include those entities that own or operate such Facilities, the Reliability Standard CIP-014 first applies to Transmission Owners that own Transmission Facilities that meet the specific criteria in Applicability Section 4.1.1.1 through 4.1.1.4. The Facilities described in Applicability Section 4.1.1.1 through 4.1.1.4 mirror those Transmission Facilities that meet the bright line criteria for "Medium Impact" Transmission Facilities under Attachment 1 of Reliability Standard CIP-002-5.1. Each Transmission Owner that owns Transmission Facilities that meet the criteria in Section 4.1.1.1 through 4.1.1.4 is required to perform a risk assessment as specified in Requirement R1 to identify its Transmission stations and Transmission substations, and their associated primary control centers, that if rendered inoperable or damaged as a result of a physical attack could result in instability, uncontrolled separation, or Cascading within an Interconnection. The Standard Drafting Team (SDT) expects this population will be small and that many Transmission Owners that meet the applicability of this standard will not actually identify any such Facilities. Only those Transmission Owners with Transmission stations or Transmission substations identified in the risk assessment (and verified under Requirement R2) have performance obligations under Requirements R3 through R6.~~

~~This standard also applies to Transmission Operators. A Transmission Operator's obligations under the standard, however, are only triggered if the Transmission Operator is notified by an applicable Transmission Owner under Requirement R3 that the Transmission Operator operates a primary control center that operationally controls a Transmission station(s) or Transmission substation(s) identified in the Requirement R1 risk assessment. A primary control center operationally controls a Transmission station or Transmission substation when the control center's electronic actions can cause direct physical action at the identified Transmission station or Transmission substation, such as opening a breaker, as opposed to a control center that only has information from the Transmission station or Transmission substation and must coordinate direct action through another entity. Only Transmission Operators who are notified that they have primary control centers under this standard have performance obligations under Requirements R4 through R6. In other words, primary control center for purposes of this Standard is the control center that the Transmission Owner or Transmission Operator, respectively, uses as its primary, permanently-manned site to physically operate a Transmission station or Transmission substation that is identified in Requirement R1 and verified in Requirement R2. Control centers that provide back-up capability are not applicable, as they are a form of resiliency and intentionally redundant.~~

~~The SDT considered several options for bright line criteria that could be used to determine applicability and provide an initial threshold that defines the set of Transmission stations and Transmission substations that would meet the directives of the FERC order on physical security (*i.e.*, those that could cause instability, uncontrolled separation, or Cascading within an Interconnection). The SDT determined that using the criteria for Medium Impact Transmission Facilities in Attachment 1 of CIP-002-5.1 would provide a conservative threshold for defining which Transmission stations and Transmission substations must be included in the risk assessment in Requirement R1 of CIP-014. Additionally, the SDT concluded that using the CIP-002-5.1 Medium Impact criteria was appropriate because it has been approved by stakeholders, NERC, and FERC, and its use provides a technically sound basis to determine~~

which Transmission Owners should conduct the risk assessment. As described in CIP-002-5.1, the failure of a Transmission station or Transmission substation that meets the Medium Impact criteria could have the capability to result in exceeding one or more Interconnection Reliability Operating Limits (IROLs). The SDT understands that using this bright line criteria to determine applicability may require some Transmission Owners to perform risk assessments under Requirement R1 that will result in a finding that none of their Transmission stations or Transmission substations would pose a risk of instability, uncontrolled separation, or Cascading within an Interconnection. However, the SDT determined that higher bright lines could not be technically justified to ensure inclusion of all Transmission stations and Transmission substations, and their associated primary control centers that, if rendered inoperable or damaged as a result of a physical attack could result in instability, uncontrolled separation, or Cascading within an Interconnection. Further guidance and technical basis for the bright line criteria for Medium Impact Facilities can be found in the Guidelines and Technical Basis section of CIP-002-5.1.

Additionally, the SDT determined that it was not necessary to include Generator Operators and Generator Owners in the Reliability Standard. First, Transmission stations or Transmission substations interconnecting generation facilities are considered when determining applicability. Transmission Owners will consider those Transmission stations and Transmission substations that include a Transmission station on the high side of the Generator Step-up transformer (GSU) using Applicability Section 4.1.1.1 and 4.1.1.2. As an example, a Transmission station or Transmission substation identified as a Transmission Owner facility that interconnects generation will be subject to the Requirement R1 risk assessment if it operates at 500kV or greater or if it is connected at 200 kV – 499kV to three or more other Transmission stations or Transmission substations and has an "aggregate weighted value" exceeding 3000 according to the table in Applicability Section 4.1.1.2. Second, the Transmission analysis or analyses conducted under Requirement R1 should take into account the impact of the loss of generation connected to applicable Transmission stations or Transmission substations. Additionally, the FERC order does not explicitly mention generation assets and is reasonably understood to focus on the most critical Transmission Facilities. The diagram below shows an example of a station.

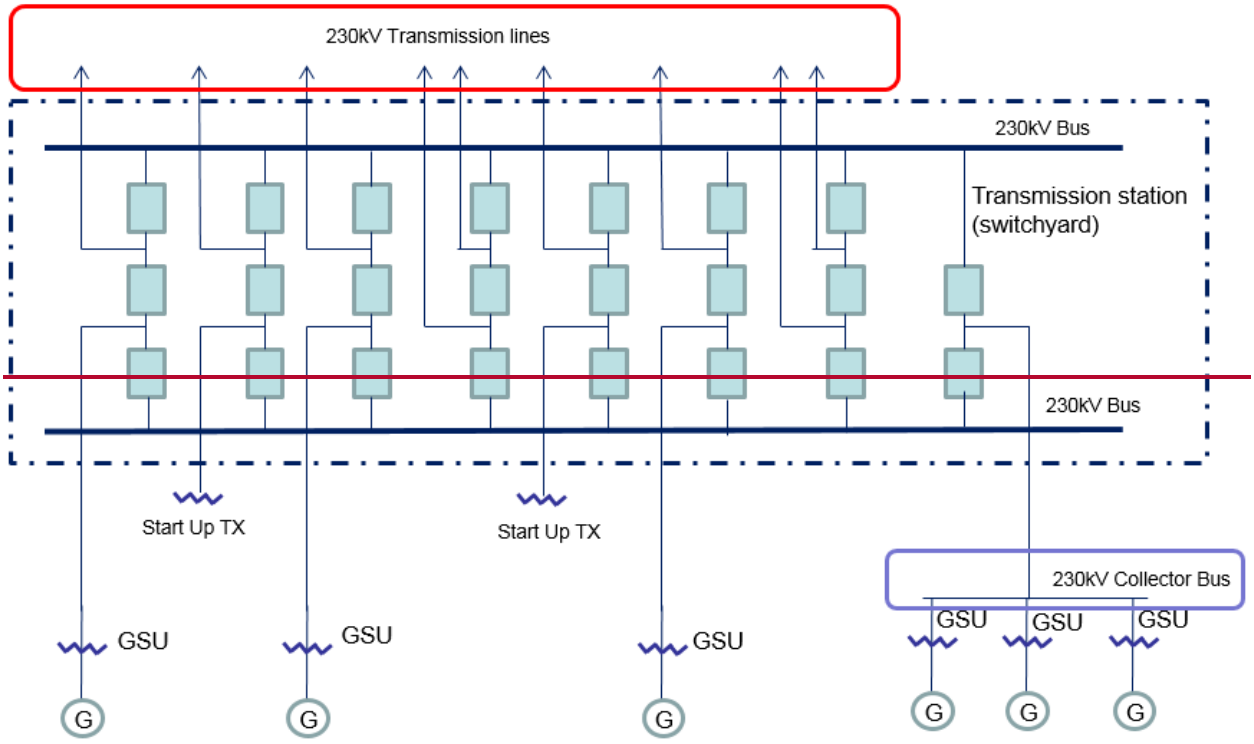

~~Also, the SDT uses the phrase "Transmission stations or Transmission substations" to recognize the existence of both stations and substations. Many entities in industry consider a substation to be a location with physical borders (i.e. fence, wall, etc.) that contains at least an autotransformer. Locations also exist that do not contain autotransformers, and many entities in industry refer to those locations as stations (switching stations or switchyards). Therefore, the SDT chose to use both "station" and "substation" to refer to the locations where groups of Transmission Facilities exist.~~

~~On the issue of joint ownership, the SDT recognizes that this issue is not unique to CIP-014, and expects that the applicable Transmission Owners and Transmission Operators will develop memorandums of understanding, agreements, Coordinated Functional Registrations, or procedures, etc., to designate responsibilities under CIP-014 when joint ownership is at issue, which is similar to what many entities have completed for other Reliability Standards.~~

~~The language contained in the applicability section regarding the collector bus is directly copied from CIP-002-5.1, Attachment 1, and has no additional meaning within the CIP-014 standard.~~

~~Requirement R1~~

~~The initial risk assessment required under Requirement R1 must be completed on or before the effective date of the standard. Subsequent risk assessments are to be performed at least once every 30 or 60 months depending on the results of the previous risk assessment per Requirement R1, Part 1.1. In performing the risk assessment under Requirement R1, the~~

~~Transmission Owner should first identify their population of Transmission stations and Transmission substations that meet the criteria contained in Applicability Section 4.1.1. Requirement R1 then requires the Transmission Owner to perform a risk assessment, consisting of a transmission analysis, to determine which of those Transmission stations and Transmission Substations if rendered inoperable or damaged could result in instability, uncontrolled separation, or Cascading within an Interconnection. The requirement is not to require identification of, and thus, not intended to bring within the scope of the standard a Transmission station or Transmission substation unless the applicable Transmission Owner determines through technical studies and analyses based on objective analysis, technical expertise, operating experience and experienced judgment that the loss of such facility would have a critical impact on the operation of the Interconnection in the event the asset is rendered inoperable or damaged. In the November 20, 2014 Order, FERC reiterated that "only an instability that has a "critical impact on the operation of the interconnection" warrants finding that the facility causing the instability is critical under Requirement R1." The Transmission Owner may determine the criteria for critical impact by considering, among other criteria, any of the following:~~

- ~~Criteria or methodology used by Transmission Planners or Planning Coordinators in TPL-001-4, Requirement R6~~
- ~~NERC EOP-004-2 reporting criteria~~
- ~~Area or magnitude of potential impact~~

~~The standard does not mandate the specific analytical method for performing the risk assessment. The Transmission Owner has the discretion to choose the specific method that best suites its needs. As an example, an entity may perform a Power Flow analysis and stability analysis at a variety of load levels.~~

~~Performing Risk Assessments~~

~~The Transmission Owner has the discretion to select a transmission analysis method that fits its facts and system circumstances. To mandate a specific approach is not technically desirable and may lead to results that fail to adequately consider regional, topological, and system circumstances. The following guidance is only an example on how a Transmission Owner may perform a power flow and/or stability analysis to identify those Transmission stations and Transmission substations that if rendered inoperable or damaged as a result of a physical attack could result in instability, uncontrolled separation, or Cascading within an Interconnection. An entity could remove all lines, without regard to the voltage level, to a single Transmission station or Transmission substation and review the simulation results to assess system behavior to determine if Cascading of Transmission Facilities, uncontrolled separation, or voltage or frequency instability is likely to occur over a significant area of the Interconnection. Using engineering judgment, the Transmission Owner (possibly in consultation with regional planning or operation committees and/or ISO/RTO committee input) should develop criteria (e.g. imposing a fault near the removed Transmission station or Transmission substation) to identify a contingency or parameters that result in potential instability, uncontrolled separation, or Cascading within an Interconnection. Regional consultation on these matters is likely to be~~

~~helpful and informative, given that the inputs for the risk assessment and the attributes of what constitutes instability, uncontrolled separation, or Cascading within an Interconnection will likely vary from region-to-region or from ISO-to-ISO based on topology, system characteristics, and system configurations. Criteria could also include post-contingency facilities loadings above a certain emergency rating or failure of a power flow case to converge. Available special protection systems (SPS), if any, could be applied to determine if the system experiences any additional instability which may result in uncontrolled separation. Example criteria may include:~~

~~(a) Thermal overloads beyond facility emergency ratings;~~

~~(b) Voltage deviation exceeding ± 10%; or~~

~~(c) Cascading outage/voltage collapse; or~~

~~(d) Frequency below under-frequency load shed points~~

~~Periodicity~~

~~A Transmission Owner who identifies one or more Transmission stations or Transmission substations (as verified under Requirement R2) that if rendered inoperable or damaged could result in instability, uncontrolled separation, or Cascading within an Interconnection is required to conduct a risk assessment at least once every 30 months. This period ensures that the risk assessment remains current with projected conditions and configurations in the planned system. This risk assessment, as the initial assessment, must consider applicable planned Transmission stations and Transmission substations to be in service within 24 months. The 30 month timeframe aligns with the 24 month planned to be in service date because the Transmission Owner is provided the flexibility, depending on its planning cycle and the frequency in which it may plan to construct a new Transmission station or Transmission substation to more closely align these dates. The requirement is to conduct the risk assessment at least once every 30 months, so for a Transmission Owner that believes it is better to conduct a risk assessment once every 24 months, because of its planning cycle, it has the flexibility to do so.~~

~~Transmission Owners that have not identified any Transmission stations or Transmission substations (as verified under Requirement R2) that if rendered inoperable or damaged could result in instability, uncontrolled separation, or Cascading within an Interconnection are unlikely to see changes to their risk assessment in the Near-Term Planning Horizon. Consequently, a 60 month periodicity for completing a subsequent risk assessment is specified.~~

~~Identification of Primary Control Centers~~

~~After completing the risk assessment specified in Requirement R1, it is important to additionally identify the primary control center that operationally controls each Transmission station or Transmission substation that if rendered inoperable or damaged could result in instability, uncontrolled separation, or Cascading within an Interconnection. A primary control center~~

"operationally controls" a Transmission station or Transmission substation when the control center's electronic actions can cause direct physical actions at the identified Transmission station and Transmission substation, such as opening a breaker.

Requirement R2

This requirement specifies verification of the risk assessment performed under Requirement R1 by an entity other than the owner or operator of the Requirement R1 risk assessment.

A verification of the risk assessment by an unaffiliated third party, as specified in Requirement R2, could consist of:

1. Certifying that the Requirement R1 risk assessment considers the Transmission stations and Transmission substations identified in Applicability Section 4.1.1.

2. Review of the model used to conduct the risk assessment to ensure it contains sufficient system topology to identify Transmission stations and Transmission substations that if rendered inoperable or damaged could cause instability, uncontrolled separation, or Cascading within an Interconnection.

3. Review of the Requirement R1 risk assessment methodology.

This requirement provides the flexibility for a Transmission Owner to select from unaffiliated registered and non-registered entities with transmission planning or analysis experience to perform the verification of the Requirement R1 risk assessment. The term unaffiliated means that the selected verifying entity cannot be a corporate affiliate (*i.e.*, the verifying or third party reviewer cannot be an entity that corporately controls, is controlled by or is under common control with, the Transmission Owner). The verifying entity also cannot be a division of the Transmission Owner that operates as a functional unit.

The prohibition on registered entities using a corporate affiliate to conduct the verification, however, does not prohibit a governmental entity (e.g., a city, a municipality, a U.S. federal power marketing agency, or any other political subdivision of U.S. or Canadian federal, state, or provincial governments) from selecting as the verifying entity another governmental entity within the same political subdivision. For instance, a U.S. federal power marketing agency may select as its verifier another U.S. federal agency to conduct its verification so long as the selected entity has transmission planning or analysis experience. Similarly, a Transmission Owner owned by a Canadian province can use a separate agency of that province to perform the verification. The verifying entity, however, must still be a third party and cannot be a division of the registered entity that operates as a functional unit.

Requirement R2 also provides that the "verification may occur concurrent with or after the risk assessment performed under Requirement R1." This provision is designed to provide the Transmission Owner the flexibility to work with the verifying entity throughout (*i.e.*, concurrent with) the risk assessment, which for some Transmission Owners may be more efficient and effective. In other words, a Transmission Owner could collaborate with their unaffiliated verifying entity to perform the risk assessment under Requirement R1 such that both Requirement R1 and Requirement R2 are satisfied concurrently. The intent of Requirement R2

~~is to have an entity other than the owner or operator of the facility to be involved in the risk assessment process and have an opportunity to provide input. Accordingly, Requirement R2 is designed to allow entities the discretion to have a two-step process, where the Transmission Owner performs the risk assessment and subsequently has a third-party review that assessment, or a one-step process, where the entity collaborates with a third party to perform the risk assessment.~~

~~Characteristics to consider in selecting a third party reviewer could include:~~

- ~~Registered Entity with applicable planning and reliability functions.~~
- ~~Experience in power system studies and planning.~~
- ~~The entity's understanding of the MOD standards, TPL standards, and facility ratings as they pertain to planning studies.~~
- ~~The entity's familiarity with the Interconnection within which the Transmission Owner is located.~~

~~With respect to the requirement that Transmission owners develop and implement procedures for protecting confidential and sensitive information, the Transmission Owner could have a method for identifying documents that require confidential treatment. One mechanism for protecting confidential or sensitive information is to prohibit removal of sensitive or confidential information from the Transmission Owner's site. Transmission Owners could include such a prohibition in a non-disclosure agreement with the verifying entity.~~

~~A Technical feasibility study is not required in the Requirement R2 documentation of the technical basis for not modifying the identification in accordance with the recommendation.~~

~~On the issue of the difference between a verifier in Requirement R2 and a reviewer in Requirement R6, the SDT indicates that the verifier will confirm that the risk assessment was completed in accordance with Requirement R1, including the number of Transmission stations and substations identified, while the reviewer in Requirement R6 is providing expertise on the manner in which the evaluation of threats was conducted in accordance with Requirement R4, and the physical security plan in accordance with Requirement R5. In the latter situation there is no verification of a technical analysis, rather an application of experience and expertise to provide guidance or recommendations, if needed.~~

~~Parts 2.4 and 6.4 require the entities to have procedures to protect the confidentiality of sensitive or confidential information. Those procedures may include the following elements:~~

1. ~~Control and retention of information on site for third-party verifiers/reviewers.~~
2. ~~Only "need to know" employees, etc., get the information.~~
3. ~~Marking documents as confidential~~
4. ~~Securely storing and destroying information when no longer needed.~~
5. ~~Not releasing information outside the entity without, for example, General Counsel sign-off.~~

Requirement R3

Some Transmission Operators will have obligations under this standard for certain primary control centers. Those obligations, however, are contingent upon a Transmission Owner first completing the risk assessment specified by Requirement R1 and the verification specified by Requirement R2. Requirement R3 is intended to ensure that a Transmission Operator that has operational control of a primary control center identified in Requirement R1 receive notice so that the Transmission Operator may fulfill the rest of the obligations required in Requirements R4 through R6. Since the timing obligations in Requirements R4 through R6 are based upon completion of Requirement R2, the Transmission Owner must also include within the notice the date of completion of Requirement R2. Similarly, the Transmission Owner must notify the Transmission Operator of any removals from identification that result from a subsequent risk assessment under Requirement R1 or as a result of the verification process under Requirement R2.

Requirement R4

This requirement requires owners and operators of facilities identified by the Requirement R1 risk assessment and that are verified under Requirement R2 to conduct an assessment of potential threats and vulnerabilities to those Transmission stations, Transmission substations, and primary control centers using a tailored evaluation process. Threats and vulnerabilities may vary from facility to facility based on any number of factors that include, but are not limited to, location, size, function, existing physical security protections, and attractiveness as a target.

In order to effectively conduct a threat and vulnerability assessment, the asset owner may be the best source to determine specific site vulnerabilities, but current and evolving threats may best be determined by others in the intelligence or law enforcement communities. A number of resources have been identified in the standard, but many others exist and asset owners are not limited to where they may turn for assistance. Additional resources may include state or local fusion centers, U.S. Department of Homeland Security, Federal Bureau of Investigations (FBI), Public Safety Canada, Royal Canadian Mounted Police, and InfraGard chapters coordinated by the FBI.

The Responsible Entity is required to take a number of factors into account in Parts 4.1 to 4.3 in order to make a risk-based evaluation under Requirement R4.

To assist in determining the current threat for a facility, the prior history of attacks on similarly protected facilities should be considered when assessing probability and likelihood of occurrence at the facility in question.

Resources that may be useful in conducting threat and vulnerability assessments include:

- NERC Security Guideline for the Electricity Sector: Physical Security.
- NERC Security Guideline: Physical Security Response.
- ASIS International General Risk Assessment Guidelines.
- ASIS International Facilities Physical Security Measure Guideline.

- ASIS International Security Management Standard: Physical Asset Protection.
- Whole Building Design Guide - Threat/Vulnerability Assessments.

Requirement R5

This requirement specifies development and implementation of a security plan(s) designed to protect against attacks to the facilities identified in Requirement R1 based on the assessment performed under Requirement R4.

Requirement R5 specifies the following attributes for the physical security plan:

- *Resiliency or security measures designed collectively to deter, detect, delay, assess, communicate, and respond to potential physical threats and vulnerabilities identified during the evaluation conducted in Requirement R4.*

Resiliency may include, among other things:

a. System topology changes,

b. Spare equipment,

c. Construction of a new Transmission station or Transmission substation.

While most security measures will work together to collectively harden the entire site, some may be allocated to protect specific critical components. For example, if protection from gunfire is considered necessary, the entity may only install ballistic protection for critical components, not the entire site.

- *Law enforcement contact and coordination information.*

Examples of such information may be posting 9-1-1 for emergency calls and providing substation safety and familiarization training for local and federal law enforcement, fire department, and Emergency Medical Services.

- *A timeline for executing the physical security enhancements and modifications specified in the physical security plan.*

Entities have the flexibility to prioritize the implementation of the various resiliency or security enhancements and modifications in their security plan according to risk, resources, or other factors. The requirement to include a timeline in the physical security plan for executing the actual physical security enhancements and modifications does not also require that the enhancements and modifications be completed within 120 days. The actual timeline may extend beyond the 120 days, depending on the amount of work to be completed.

- *Provisions to evaluate evolving physical threats, and their corresponding security measures, to the Transmission station(s), Transmission substation(s), or primary control center(s).*

A registered entity's physical security plan should include processes and responsibilities for obtaining and handling alerts, intelligence, and threat warnings from various sources. Some of these sources could include the ERO, ES-ISAC, and US and/or Canadian federal agencies. This

information should be used to reevaluate or consider changes in the security plan and corresponding security measures of the security plan found in R5.

Incremental changes made to the physical security plan prior to the next required third party review do not require additional third party reviews.

Requirement R6

This requirement specifies review by an entity other than the Transmission Owner or Transmission Operator with appropriate expertise for the evaluation performed according to Requirement R4 and the security plan(s) developed according to Requirement R5. As with Requirement R2, the term unaffiliated means that the selected third party reviewer cannot be a corporate affiliate (*i.e.,* the third party reviewer cannot be an entity that corporately controls, is controlled by or is under common control with, the Transmission Operator). A third party reviewer also cannot be a division of the Transmission Operator that operates as a functional unit.

As noted in the guidance for Requirement R2, the prohibition on registered entities using a corporate affiliate to conduct the review, however, does not prohibit a governmental entity from selecting as the third party reviewer another governmental entity within the same political subdivision. For instance, a city or municipality may use its local enforcement agency, so long as the local law enforcement agency satisfies the criteria in Requirement R6. The third party reviewer, however, must still be a third party and cannot be a division of the registered entity that operates as a functional unit.

The Responsible Entity can select from several possible entities to perform the review:

- *An entity or organization with electric industry physical security experience and whose review staff has at least one member who holds either a Certified Protection Professional (CPP) or Physical Security Professional (PSP) certification.*

  In selecting CPP and PSP for use in this standard, the SDT believed it was important that if a private entity such as a consulting or security firm was engaged to conduct the third party review, they must tangibly demonstrate competence to conduct the review. This includes electric industry physical security experience and either of the premier security industry certifications sponsored by ASIS International. The ASIS certification program was initiated in 1977, and those that hold the CPP certification are board certified in security management. Those that hold the PSP certification are board certified in physical security.

- *An entity or organization approved by the ERO.*

- *A governmental agency with physical security expertise.*

- *An entity or organization with demonstrated law enforcement, government, or military physical security expertise.*

As with the verification under Requirement R2, Requirement R6 provides that the "review may occur concurrently with or after completion of the evaluation performed under Requirement R4 and the security plan development under Requirement R5." This provision is designed to

~~provide applicable Transmission Owners and Transmission Operators the flexibility to work with the third party reviewer throughout (*i.e.*, concurrent with) the evaluation performed according to Requirement R4 and the security plan(s) developed according to Requirement R5, which for some Responsible Entities may be more efficient and effective. In other words, a Transmission Owner or Transmission Operator could collaborate with their unaffiliated third party reviewer to perform an evaluation of potential threats and vulnerabilities (Requirement R4) and develop a security plan (Requirement R5) to satisfy Requirements R4 through R6 simultaneously. The intent of Requirement R6 is to have an entity other than the owner or operator of the facility to be involved in the Requirement R4 evaluation and the development of the Requirement R5 security plans and have an opportunity to provide input on the evaluation and the security plan. Accordingly, Requirement R6 is designed to allow entities the discretion to have a two-step process, where the Transmission Owner performs the evaluation and develops the security plan itself and then has a third party review that assessment, or a one-step process, where the entity collaborates with a third party to perform the evaluation and develop the security plan.~~

~~Timeline~~

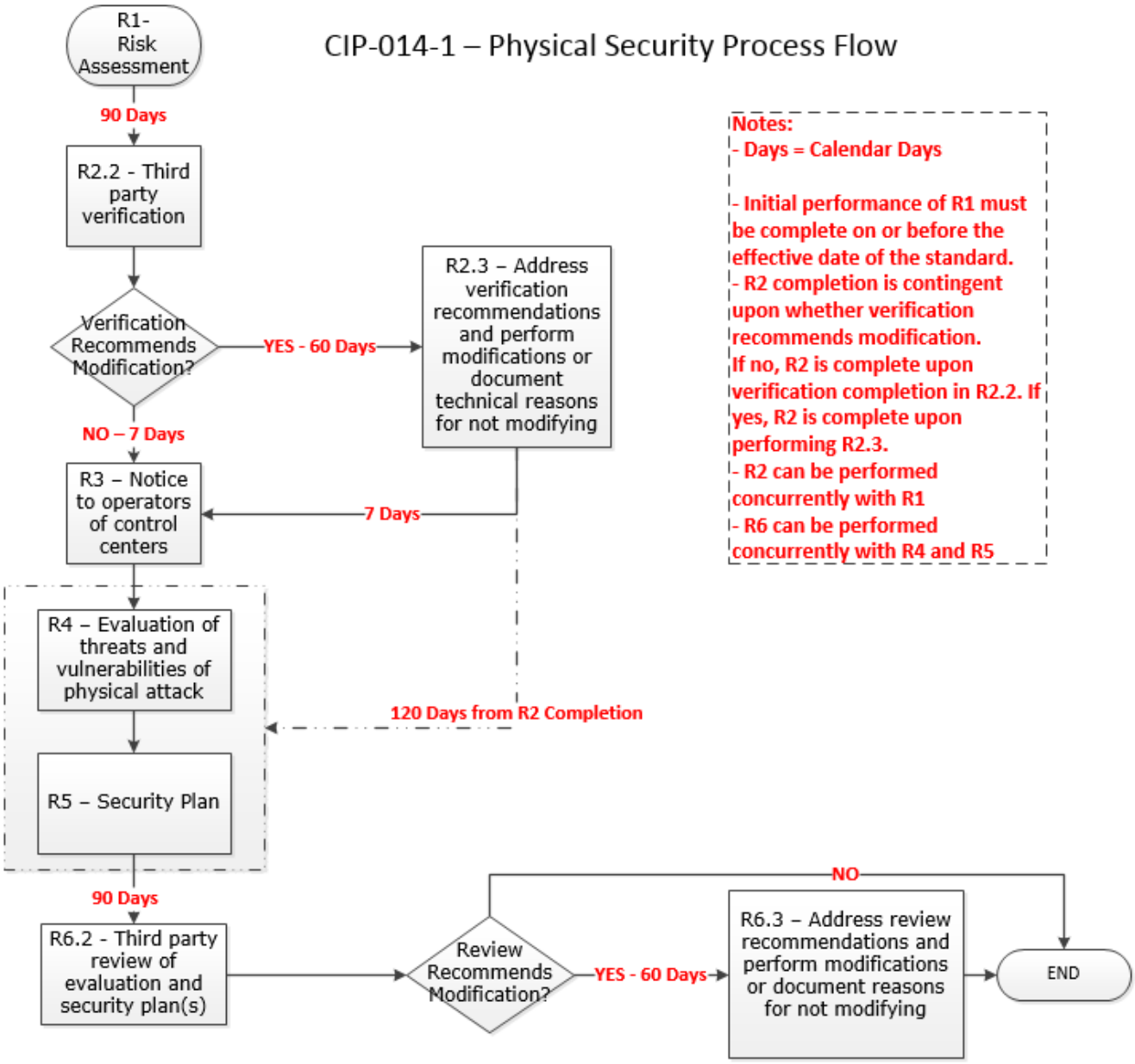
CIP-014-1 – Physical Security Process Flow
R1- Risk Assessment
90 Days
R2.2 - Third party verification
Verification Recommends Modification?
YES - 60 Days
R2.3 – Address verification recommendations and perform modifications or document technical reasons for not modifying
NO – 7 Days
R3 – Notice to operators of control centers
7 Days
R4 – Evaluation of threats and vulnerabilities of physical attack
120 Days from R2 Completion
R5 – Security Plan
90 Days
R6.2 - Third party review of evaluation and security plan(s)
Review Recommends Modification?
YES - 60 Days
NO
R6.3 – Address review recommendations and perform modifications or document reasons for not modifying
END
Notes:
- Days = Calendar Days
- Initial performance of R1 must be complete on or before the effective date of the standard.
- R2 completion is contingent upon whether verification recommends modification. If no, R2 is complete upon verification completion in R2.2. If yes, R2 is complete upon performing R2.3.
- R2 can be performed concurrently with R1
- R6 can be performed concurrently with R4 and R5

Rationale

During development of this standard, text boxes were embedded within the standard to explain the rationale for various parts of the standard. Upon BOT approval, the text from the rationale text boxes was moved to this section.

Rationale for Requirement R1:

This requirement meets the FERC directive from paragraph 6 of its March 7, 2014 order on physical security to perform a risk assessment to identify which facilities if rendered inoperable or damaged could impact an Interconnection through instability, uncontrolled separation, or cascading failures. The requirement is not intended to bring within the scope of the standard a Transmission station or Transmission substation unless the applicable Transmission Owner determines through technical studies and analyses based on objective analysis, technical expertise, operating experience and experienced judgment that the loss of such facility would have a critical impact on the operation of the Interconnection in the event the asset is rendered inoperable or damaged. In the November 20, 2014 Order, FERC reiterated that "only an instability that has a "critical impact on the operation of the interconnection" warrants finding that the facility causing the instability is critical under Requirement R1." The Transmission Owner may determine the criteria for critical impact by considering, among other criteria, any of the following:

- Criteria or methodology used by Transmission Planners or Planning Coordinators in TPL-001-4, Requirement R6
- NERC EOP-004-2 reporting criteria
- Area or magnitude of potential impact

Requirement R1 also meets the FERC directive for periodic reevaluation of the risk assessment by requiring the risk assessment to be performed every 30 months (or 60 months for an entity that has not identified in a previous risk assessment any Transmission stations or Transmission substations that if rendered inoperable or damaged could result in instability, uncontrolled separation, or Cascading within an Interconnection).

After identifying each Transmission station and Transmission substation that meets the criteria in Requirement R1, it is important to additionally identify the primary control center that operationally controls that Transmission station or Transmission substation (*i.e.*, the control center whose electronic actions can cause direct physical actions at the identified Transmission station and Transmission substation, such as opening a breaker, compared to a control center that only has the ability to monitor the Transmission station and Transmission substation and, therefore, must coordinate direct physical action through another entity).

Rationale for Requirement R2:

This requirement meets the FERC directive from paragraph 11 in the order on physical security requiring verification by an entity other than the owner or operator of the risk assessment performed under Requirement R1.

This requirement provides the flexibility for a Transmission Owner to select registered and non-registered entities with transmission planning or analysis experience to perform the verification of the Requirement R1 risk assessment. The term "unaffiliated" means that the selected verifying entity cannot be a corporate affiliate (*i.e.*, the verifying entity cannot be an entity that controls, is controlled by, or is under common control with, the Transmission owner). The verifying entity also cannot be a division of the Transmission Owner that operates as a functional unit. The term "unaffiliated" is not intended to prohibit a governmental entity from using another government entity to be a verifier under Requirement R2.

Requirement R2 also provides the Transmission Owner the flexibility to work with the verifying entity throughout the Requirement R1 risk assessment, which for some Transmission Owners may be more efficient and effective. In other words, a Transmission Owner could coordinate with their unaffiliated verifying entity to perform a Requirement R1 risk assessment to satisfy both Requirement R1 and Requirement R2 concurrently.

Planning Coordinator is a functional entity listed in Part 2.1. The Planning Coordinator and Planning Authority are the same entity as shown in the NERC Glossary of Terms Used in NERC Reliability Standards.

Rationale for Requirement R3:

Some Transmission Operators will have obligations under this standard for certain primary control centers. Those obligations, however, are contingent upon a Transmission Owner first identifying which Transmission stations and Transmission substations meet the criteria specified by Requirement R1, as verified according to Requirement R2. This requirement is intended to ensure that a Transmission Operator that has operational control of a primary control center identified in Requirement R1, Part 1.2 of a Transmission station or Transmission substation verified according to Requirement R2 receives notice of such identification so that the Transmission Operator may timely fulfill its resulting obligations under Requirements R4 through R6. Since the timing obligations in Requirements R4 through R6 are based upon completion of Requirement R2, the Transmission Owner must also include notice of the date of completion of Requirement R2. Similarly, the Transmission Owner must notify the Transmission Operator of any removals from identification that result from a subsequent risk assessment under Requirement R1 or the verification process under Requirement R2.

Rationale for Requirement R4:

This requirement meets the FERC directive from paragraph 8 in the order on physical security that the reliability standard must require tailored evaluation of potential threats and vulnerabilities to facilities identified in Requirement R1 and verified according to Requirement R2. Threats and vulnerabilities may vary from facility to facility based on factors such as the facility's location, size, function, existing protections, and attractiveness of the target. As such, the requirement does not mandate a one-size-fits-all approach but requires entities to account for the unique characteristics of their facilities.

Requirement R4 does not explicitly state when the evaluation of threats and vulnerabilities must occur or be completed. However, Requirement R5 requires that the entity's security plan(s), which is dependent on the Requirement R4 evaluation, must be completed within 120 calendar days following completion of Requirement R2. Thus, an entity has the flexibility when to complete the Requirement R4 evaluation, provided that it is completed in time to comply with the requirement in Requirement R5 to develop a physical security plan 120 calendar days following completion of Requirement R2.

Rationale for Requirement R5:

This requirement meets the FERC directive from paragraph 9 in the order on physical security requiring the development and implementation of a security plan(s) designed to protect against attacks to the facilities identified in Requirement R1 based on the assessment performed under Requirement R4.

Rationale for Requirement R6:

This requirement meets the FERC directive from paragraph 11 in the order on physical security requiring review by an entity other than the owner or operator with appropriate expertise of the evaluation performed according to Requirement R4 and the security plan(s) developed according to Requirement R5.

As with the verification required by Requirement R2, Requirement R6 provides Transmission Owners and Transmission Operators the flexibility to work with the third party reviewer throughout the Requirement R4 evaluation and the development of the Requirement R5 security plan(s). This would allow entities to satisfy their obligations under Requirement R6 concurrent with the satisfaction of their obligations under Requirements R4 and R5.

Attachment 1 – Applicability Criteria

Applicable Transmission station(s) or Transmission substation(s) are those that meet any of the following criteria:

1. Transmission Facilities operated at 500 kV or higher. For the purpose of this criterion, the collector bus for a generation plant is not considered a Transmission Facility, but is part of the generation interconnection Facility.

2. Transmission Facilities that are operating between 200 kV and 499 kV at a single station or substation, where the station or substation is connected at 200 kV or higher voltages to three or more other Transmission stations or substations and has an "aggregate weighted value" exceeding 3000 according to the table below. The "aggregate weighted value" for a single station or substation is determined by summing the "weight value per line" shown in the table below for each incoming and each outgoing BES Transmission Line that is connected to another Transmission station or substation. For the purpose of this criterion, the collector bus for a generation plant is not considered a Transmission Facility, but is part of the generation interconnection Facility.

Voltage Value of a Line	Weight Value per Line
less than 200 kV (not applicable)	(not applicable)
200 kV to 299 kV	700
300 kV to 499 kV	1300
500 kV and above	0

3. Transmission Facilities at a single station or substation location that are identified by its Reliability Coordinator, Planning Coordinator, or Transmission Planner as critical to the derivation of Interconnection Reliability Operating Limits (IROLs) and their associated contingencies.

4. Transmission Facilities identified as essential to meeting Nuclear Plant Interface Requirements.

NERC
NORTH AMERICAN ELECTRIC RELIABILITY CORPORATION

Implementation Plan

Project 2023-06 CIP-014 Risk Assessment Refinement
Reliability Standard CIP-014-4

Applicable Standard(s)

- CIP-014-4 Physical Security

Requested Retirement(s)

- CIP-014-3 Physical Security

Applicable Entities

- Transmission Owner (TO)
- Transmission Operator (TOP)

General Considerations

The Drafting Team has determined that 24 calendar months for the CIP-014-4 implementation plan would allow adequate time for Transmission Owners and Transmission Operators to determine applicability, develop criteria, write or revise methodologies, perform assessments, and procure unaffiliated third parties for risk assessment verification (which some Transmission Owners have performed concurrently with their risk assessment analyses).

Effective Date of CIP-014-4

The initial risk assessment required by CIP-014-4, Requirement R5, must be completed on or before the effective date of the standard. Where approval by an Applicable Governmental Authority is required, Reliability Standard CIP-014-4 shall become effective on the first day of the first calendar quarter 24 calendar months after the effective date of the Applicable Governmental Authority's order approving the standard or as otherwise provided for by the Applicable Governmental Authority.

Where approval by an Applicable Governmental Authority is not required, Reliability Standard CIP-014-4 shall become effective the first day of the first calendar quarter 24 calendar months after the date the standard is adopted by the NERC Board of Trustees or as otherwise provided for in that jurisdiction.

Retirement Date

Reliability Standard CIP-014-3 shall be retired immediately prior to the effective date of Reliability Standard CIP-014 in the particular jurisdiction in which the revised standard is becoming effective.

NERC
NORTH AMERICAN ELECTRIC RELIABILITY CORPORATION

Implementation Plan

Project 2023-06 CIP-014 Risk Assessment Refinement
Reliability Standard CIP-014-4

Applicable Standard(s)

- CIP-014-4 Physical Security

Requested Retirement(s)

- CIP-014-3 Physical Security

Applicable Entities

- Transmission Owner (TO)
- Transmission Operator (TOP)

General Considerations

The Drafting Team has determined that 24 calendar months for the CIP-014-4 implementation plan would allow adequate time for Transmission Owners and Transmission Operators to determine applicability, develop criteria, write or revise methodologies, perform assessments, and procure unaffiliated third parties for risk assessment verification (which some Transmission Owners have performed concurrently with their risk assessment analyses).

Effective Date of CIP-014-4

The initial risk assessment required by CIP-014-4, Requirement R5, must be completed on or before the effective date of the standard. Where approval by an Applicable Governmental Authority is required, Reliability Standard CIP-014-4 shall become effective on the first day of the first calendar quarter 24 calendar months after the effective date of the Applicable Governmental Authority's order approving the standard or as otherwise provided for by the Applicable Governmental Authority.

Where approval by an Applicable Governmental Authority is not required, Reliability Standard CIP-014-4 shall become effective the first day of the first calendar quarter 24 calendar months after the date the standard is adopted by the NERC Board of Trustees or as otherwise provided for in that jurisdiction.

Retirement Date

Reliability Standard CIP-014-3 shall be retired immediately prior to the effective date of Reliability Standard CIP-014 in the particular jurisdiction in which the revised standard is becoming effective.

NERC
NORTH AMERICAN ELECTRIC RELIABILITY CORPORATION

Violation Risk Factor and Violation Severity Level Justifications

Project 2023-06 CIP-014 Risk Assessment Refinement (CIP-014-4)

This document provides the standard drafting team's (SDT's) justification for assignment of violation risk factors (VRFs) and violation severity levels (VSLs) for each requirement in CIP-014-4. Each requirement is assigned a VRF and a VSL. These elements support the determination of an initial value range for the Base Penalty Amount regarding violations of requirements in FERC-approved Reliability Standards, as defined in the Electric Reliability Organizations (ERO) Sanction Guidelines. The SDT applied the following NERC criteria and FERC Guidelines when developing the VRFs and VSLs for the requirements.

NERC Criteria for Violation Risk Factors

High Risk Requirement

A requirement that, if violated, could directly cause or contribute to Bulk Electric System instability, separation, or a cascading sequence of failures, or could place the Bulk Electric System at an unacceptable risk of instability, separation, or cascading failures; or, a requirement in a planning time frame that, if violated, could, under emergency, abnormal, or restorative conditions anticipated by the preparations, directly cause or contribute to Bulk Electric System instability, separation, or a cascading sequence of failures, or could place the Bulk Electric System at an unacceptable risk of instability, separation, or cascading failures, or could hinder restoration to a normal condition.

Medium Risk Requirement

A requirement that, if violated, could directly affect the electrical state or the capability of the Bulk Electric System, or the ability to effectively monitor and control the Bulk Electric System. However, violation of a medium risk requirement is unlikely to lead to Bulk Electric System instability, separation, or cascading failures; or, a requirement in a planning time frame that, if violated, could, under emergency, abnormal, or restorative conditions anticipated by the preparations, directly and adversely affect the electrical state or capability of the Bulk Electric System, or the ability to effectively monitor, control, or restore the Bulk Electric System. However, violation of a medium risk requirement is unlikely, under emergency, abnormal, or restoration conditions anticipated by the preparations, to lead to Bulk Electric System instability, separation, or cascading failures, nor to hinder restoration to a normal condition.

Lower Risk Requirement
A requirement that is administrative in nature and a requirement that, if violated, would not be expected to adversely affect the electrical state or capability of the Bulk Electric System, or the ability to effectively monitor and control the Bulk Electric System; or, a requirement that is administrative in nature and a requirement in a planning time frame that, if violated, would not, under the emergency, abnormal, or restorative conditions anticipated by the preparations, be expected to adversely affect the electrical state or capability of the Bulk Electric System, or the ability to effectively monitor, control, or restore the Bulk Electric System.

FERC Guidelines for Violation Risk Factors

Guideline (1) – Consistency with the Conclusions of the Final Blackout Report

FERC seeks to ensure that VRFs assigned to Requirements of Reliability Standards in these identified areas appropriately reflect their historical critical impact on the reliability of the Bulk-Power System. In the VSL Order, FERC listed critical areas (from the Final Blackout Report) where violations could severely affect the reliability of the Bulk-Power System:

- Emergency operations
- Vegetation management
- Operator personnel training
- Protection systems and their coordination
- Operating tools and backup facilities
- Reactive power and voltage control
- System modeling and data exchange
- Communication protocol and facilities
- Requirements to determine equipment ratings
- Synchronized data recorders
- Clearer criteria for operationally critical facilities
- Appropriate use of transmission loading relief.

Guideline (2) – Consistency within a Reliability Standard
FERC expects a rational connection between the sub-Requirement VRF assignments and the main Requirement VRF assignment.

Guideline (3) – Consistency among Reliability Standards
FERC expects the assignment of VRFs corresponding to Requirements that address similar reliability goals in different Reliability Standards would be treated comparably.

Guideline (4) – Consistency with NERC's Definition of the Violation Risk Factor Level
Guideline (4) was developed to evaluate whether the assignment of a particular VRF level conforms to NERC's definition of that risk level.

Guideline (5) – Treatment of Requirements that Co-mingle More Than One Obligation
Where a single Requirement co-mingles a higher risk reliability objective and a lesser risk reliability objective, the VRF assignment for such Requirements must not be watered down to reflect the lower risk level associated with the less important objective of the Reliability Standard.

NERC Criteria for Violation Severity Levels

VSLs define the degree to which compliance with a requirement was not achieved. Each requirement must have at least one VSL. While it is preferable to have four VSLs for each requirement, some requirements do not have multiple "degrees" of noncompliant performance and may have only one, two, or three VSLs.

VSLs should be based on NERC's overarching criteria shown in the table below:

Lower VSL	Moderate VSL	High VSL	Severe VSL
The performance or product measured almost meets the full intent of the requirement.	The performance or product measured meets the majority of the intent of the requirement.	The performance or product measured does not meet the majority of the intent of the requirement, but does meet some of the intent.	The performance or product measured does not substantively meet the intent of the requirement.

FERC Order of Violation Severity Levels

The FERC VSL guidelines are presented below, followed by an analysis of whether the VSLs proposed for each requirement in the standard meet the FERC Guidelines for assessing VSLs:

Guideline (1) – Violation Severity Level Assignments Should Not Have the Unintended Consequence of Lowering the Current Level of Compliance

Compare the VSLs to any prior levels of non-compliance and avoid significant changes that may encourage a lower level of compliance than was required when levels of non-compliance were used.

Guideline (2) – Violation Severity Level Assignments Should Ensure Uniformity and Consistency in the Determination of Penalties

A violation of a "binary" type requirement must be a "Severe" VSL.
Do not use ambiguous terms such as "minor" and "significant" to describe noncompliant performance.

Guideline (3) – Violation Severity Level Assignment Should Be Consistent with the Corresponding Requirement

VSLs should not expand on what is required in the requirement.

Guideline (4) – Violation Severity Level Assignment Should Be Based on a Single Violation, Not on a Cumulative Number of Violations

Unless otherwise stated in the requirement, each instance of non-compliance with a requirement is a separate violation. Section 4 of the Sanction Guidelines states that assessing penalties on a per violation per day basis is the "default" for penalty calculations.

VRF Justification for CIP-014-4, Requirement R1

The VRF did not change from the previously FERC approved CIP-014-3 Reliability Standard.

VSLs for CIP-014-4, Requirement R1			
Lower	**Moderate**	**High**	**Severe**
The Transmission Owner documented a list of applicable Transmission station(s) or Transmission substation(s) per Attachment 1, but did so after 36 calendar months, but less than or equal to 38 calendar months. OR The Transmission Owner documented a list of applicable Transmission station(s) or Transmission substation(s), but failed to identify less than or equal to 10% of the applicable Transmission station(s) or Transmission substation(s) per Attachment 1.	The Transmission Owner documented a list of applicable Transmission station(s) or Transmission substation(s) per Attachment 1, but did so after 38 calendar months, but less than or equal to 40 calendar months. OR The Transmission Owner documented a list of applicable Transmission station(s) or Transmission substation(s), but failed to identify more than 10% and less than or equal to 20% of the applicable Transmission station(s) or Transmission substation(s) per Attachment 1.	The Transmission Owner documented a list of applicable Transmission station(s) or Transmission substation(s) per Attachment 1, but did so after 40 calendar months, but less than or equal to 42 calendar months. OR The Transmission Owner documented a list of applicable Transmission station(s) or Transmission substation(s), but failed to identify more than 20% and less than or equal to 30% of the applicable Transmission station(s) or Transmission substation(s) per Attachment 1.	The Transmission Owner failed to document a list of applicable Transmission station(s) or Transmission substation(s) per Attachment 1. OR The Transmission Owner documented a list of applicable Transmission station(s) or Transmission substation(s) per Attachment 1, but did so after more than 42 calendar months. OR The Transmission Owner identified a list of applicable Transmission station(s) or Transmission substation(s), but failed to identify more than 30% of the applicable Transmission

			station(s) or Transmission substation(s) per Attachment 1.

VSL Justifications for CIP-014-4, Requirement R1	
FERC VSL G1 Violation Severity Level Assignments Should Not Have the Unintended Consequence of Lowering the Current Level of Compliance	The requirement is a part of CIP-014-3 Requirement R1. Therefore, the proposed VSLs do not have the unintended consequence of lowering the level of compliance.
FERC VSL G2 Violation Severity Level Assignments Should Ensure Uniformity and Consistency in the Determination of Penalties Guideline 2a: The Single Violation Severity Level Assignment Category for "Binary" Requirements Is Not Consistent Guideline 2b: Violation Severity Level Assignments that Contain Ambiguous Language	The proposed VSLs are not binary and do not use any ambiguous terminology, thereby supporting uniformity and consistency in the determination of similar penalties for similar violations.
FERC VSL G3 Violation Severity Level Assignment Should Be Consistent with the Corresponding Requirement	The proposed VSLs use the same terminology as used in the associated requirement and are, therefore, consistent with the requirement.
FERC VSL G4 Violation Severity Level Assignment	Each VSL is based on a single violation and not cumulative violations.

VSL Justifications for CIP-014-4, Requirement R1	
Should Be Based on A Single Violation, Not on A Cumulative Number of Violations	

VRF Justifications for CIP-014-4, Requirement R2	
Proposed VRF	**Medium**
NERC VRF Discussion	This Requirement is a part of CIP-014-3 Requirement R1. After breaking down to five (5) different Requirements, this Requirement is less severe than Requirement R1, it does not serve as High VRF since new Requirement R1 remains as High VRF.
FERC VRF G1 Discussion Guideline 1- Consistency with Blackout Report	This VRF is consistent with the identified areas from the FERC list of critical areas in the Final Blackout Report.
FERC VRF G2 Discussion Guideline 2- Consistency within a Reliability Standard	The VRF for Requirement R2 is consistent with those connections between the sub-Requirement VRF assignments and the main Requirement VRF assignment.
FERC VRF G3 Discussion Guideline 3- Consistency among Reliability Standards	This VRF is consistent with other VRFs that address similar reliability goals in different Reliability Standards.
FERC VRF G4 Discussion Guideline 4- Consistency with NERC Definitions of VRFs	This VRF is consistent with the definition of a lower VRF requirement per the criteria filed with FERC as part of the ERO's Sanctions Guidelines.
FERC VRF G5 Discussion Guideline 5- Treatment of Requirements that Co-mingle More	This requirement does not mingle a higher risk reliability objective and a lesser risk reliability objective. Therefore, the VRF reflects the risk of the whole requirement.

VRF Justifications for CIP-014-4, Requirement R2	
Proposed VRF	**Medium**
than One Obligation	

VSLs for CIP-014-4, Requirement R2			
Lower	**Moderate**	**High**	**Severe**
			The Transmission Owner did not have documented criteria to determine when Transmission station(s) or Transmission substation(s) were in proximity for those identified in Requirement R1. OR The Transmission Owner failed to use the documented criteria to identify which Transmission station(s) or Transmission substation(s) are in proximity to each other.

VSL Justifications for CIP-014-4, Requirement R2	
FERC VSL G1 Violation Severity Level Assignments Should Not Have the Unintended Consequence of Lowering the	This Requirement is a part of CIP-014-3 Requirement R1. After breaking down to five (5) different Requirements, it does not serve as High VSL since new Requirement R1 remains as High VSL.

VSL Justifications for CIP-014-4, Requirement R2	
Current Level of Compliance	
FERC VSL G2 Violation Severity Level Assignments Should Ensure Uniformity and Consistency in the Determination of Penalties Guideline 2a: The Single Violation Severity Level Assignment Category for "Binary" Requirements Is Not Consistent Guideline 2b: Violation Severity Level Assignments that Contain Ambiguous Language	The proposed VSLs are not binary and do not use any ambiguous terminology, thereby supporting uniformity and consistency in the determination of similar penalties for similar violations.
FERC VSL G3 Violation Severity Level Assignment Should Be Consistent with the Corresponding Requirement	The proposed VSLs use the same terminology as used in the associated requirement and are, therefore, consistent with the requirement.
FERC VSL G4 Violation Severity Level Assignment Should Be Based on A Single Violation, Not on A Cumulative Number of Violations	Each VSL is based on a single violation and not cumulative violations.

VRF Justifications for CIP-014-4, Requirement R3	
Proposed VRF	**High**
NERC VRF Discussion	This Requirement is a part of CIP-014-3 Requirement R1. After breaking down to five (5) different Requirements,

VRF Justifications for CIP-014-4, Requirement R3	
Proposed VRF	**High**
	the drafting team believes that it should remain as High VRF since new Requirement R1 remains as High VRF.
FERC VRF G1 Discussion Guideline 1- Consistency with Blackout Report	This VRF is consistent with the identified areas from the FERC list of critical areas in the Final Blackout Report.
FERC VRF G2 Discussion Guideline 2- Consistency within a Reliability Standard	The VRF for Requirement R3 is consistent with those connections between the sub-Requirement VRF assignments and the main Requirement VRF assignment.
FERC VRF G3 Discussion Guideline 3- Consistency among Reliability Standards	This VRF is consistent with other VRFs that address similar reliability goals in different Reliability Standards.
FERC VRF G4 Discussion Guideline 4- Consistency with NERC Definitions of VRFs	This VRF is consistent with the definition of a lower VRF requirement per the criteria filed with FERC as part of the ERO's Sanctions Guidelines.
FERC VRF G5 Discussion Guideline 5- Treatment of Requirements that Co-mingle More than One Obligation	This requirement does mingle a higher risk reliability objective and risk reliability objective. Therefore, the VRF reflects the risk of the whole requirement.

VSLs for CIP-014-4, Requirement R3			
Lower	**Moderate**	**High**	**Severe**
The Transmission Owner has a risk assessment methodology that failed to include one of the	The Transmission Owner has a risk assessment methodology that failed to include two of the	The Transmission Owner has a risk assessment methodology that failed to include three or	The Transmission Owner has a risk assessment methodology that failed to include four of the

requirements listed in Parts 3.1 through 3.4.	requirements listed in Parts 3.1 through 3.4.	more of the requirements listed in Parts 3.1 through 3.4.	requirements listed in Parts 3.1 through 3.4. OR The Transmission Owner does not have a risk assessment methodology.

VSL Justifications for CIP-014-4, Requirement R3	
FERC VSL G1 Violation Severity Level Assignments Should Not Have the Unintended Consequence of Lowering the Current Level of Compliance	This Requirement is a part of CIP-014-3 Requirement R1. After breaking down to five (5) different Requirements, it does not serve as High VSL since new Requirement R1 remains as High VSL.
FERC VSL G2 Violation Severity Level Assignments Should Ensure Uniformity and Consistency in the Determination of Penalties Guideline 2a: The Single Violation Severity Level Assignment Category for "Binary" Requirements Is Not Consistent Guideline 2b: Violation Severity Level Assignments that Contain Ambiguous Language	The proposed VSLs are not binary and do not use any ambiguous terminology, thereby supporting uniformity and consistency in the determination of similar penalties for similar violations.
FERC VSL G3 Violation Severity Level Assignment Should Be Consistent with the	The proposed VSLs use the same terminology as used in the associated requirement and are, therefore, consistent with the requirement.

VSL Justifications for CIP-014-4, Requirement R3	
Corresponding Requirement	
FERC VSL G4 Violation Severity Level Assignment Should Be Based on A Single Violation, Not on A Cumulative Number of Violations	Each VSL is based on a single violation and not cumulative violations.

VRF Justifications for CIP-014-4, Requirement R4	
Proposed VRF	**Medium**
NERC VRF Discussion	This Requirement is a part of CIP-014-3 Requirement R1. After breaking down to five (5) different Requirements, it does not serve as High VRF since new Requirement R1 remains as High VRF.
FERC VRF G1 Discussion Guideline 1- Consistency with Blackout Report	This VRF is consistent with the identified areas from the FERC list of critical areas in the Final Blackout Report.
FERC VRF G2 Discussion Guideline 2- Consistency within a Reliability Standard	The VRF for Requirement R4 is consistent with those connections between the sub-Requirement VRF assignments and the main Requirement VRF assignment.
FERC VRF G3 Discussion Guideline 3- Consistency among Reliability Standards	This VRF is consistent with other VRFs that address similar reliability goals in different Reliability Standards.
FERC VRF G4 Discussion Guideline 4- Consistency with NERC Definitions of VRFs	This VRF is consistent with the definition of a lower VRF requirement per the criteria filed with FERC as part of the ERO's Sanctions Guidelines.

VRF Justifications for CIP-014-4, Requirement R4	
Proposed VRF	**Medium**
FERC VRF G5 Discussion Guideline 5- Treatment of Requirements that Co-mingle More than One Obligation	This requirement does not mingle a higher risk reliability objective and a lesser risk reliability objective. Therefore, the VRF reflects the risk of the whole requirement.

VSLs for CIP-014-4, Requirement R4			
Lower	**Moderate**	**High**	**Severe**
The Transmission Owner failed to coordinate less than or equal to 25% of jointly owned applicable Transmission station(s) and Transmission substation(s) with other owner(s).	The Transmission Owner failed to coordinate more than 25% and less than or equal to 50% of jointly owned applicable Transmission station(s) and Transmission substation(s) with other owner(s).	The Transmission Owner failed to coordinate more than 50% and less than or equal to 75% of jointly owned applicable Transmission station(s) and Transmission substation(s) with other owner(s).	The Transmission Owner failed to coordinate more than 75% and less than or equal to 100% any evidence of jointly owned applicable Transmission station(s) and Transmission substation(s) with other owner(s).

VSL Justifications for CIP-014-4, Requirement R4	
FERC VSL G1 Violation Severity Level Assignments Should Not Have the Unintended Consequence of Lowering the Current Level of Compliance	This Requirement is a part of CIP-014-3 Requirement R1. After breaking down to five (5) different Requirements, it does not serve as High VSL since new Requirement R1 remains as High VSL.
FERC VSL G2 Violation Severity Level Assignments	The proposed VSLs are not binary and do not use any ambiguous terminology, thereby supporting uniformity and consistency in the determination of similar penalties for similar violations.

VSL Justifications for CIP-014-4, Requirement R4	
Should Ensure Uniformity and Consistency in the Determination of Penalties Guideline 2a: The Single Violation Severity Level Assignment Category for "Binary" Requirements Is Not Consistent Guideline 2b: Violation Severity Level Assignments that Contain Ambiguous Language	
FERC VSL G3 Violation Severity Level Assignment Should Be Consistent with the Corresponding Requirement	The proposed VSLs use the same terminology as used in the associated requirement and are, therefore, consistent with the requirement.
FERC VSL G4 Violation Severity Level Assignment Should Be Based on A Single Violation, Not on A Cumulative Number of Violations	Each VSL is based on a single violation and not cumulative violations.

VRF Justifications for CIP-014-4, Requirement R5	
Proposed VRF	**High**
NERC VRF Discussion	This Requirement is a part of CIP-014-3 Requirement R1. After breaking down to five (5) different Requirements, the drafting team believe that Requirement should remain as High VRF as the existing Requirement R1 as High VRF.
FERC VRF G1 Discussion Guideline 1- Consistency with	This VRF is consistent with the identified areas from the FERC list of critical areas in the Final Blackout Report.

VRF Justifications for CIP-014-4, Requirement R5	
Proposed VRF	**High**
Blackout Report	
FERC VRF G2 Discussion Guideline 2- Consistency within a Reliability Standard	The VRF for Requirement R5 is consistent with those connections between the sub-Requirement VRF assignments and the main Requirement VRF assignment.
FERC VRF G3 Discussion Guideline 3- Consistency among Reliability Standards	This VRF is consistent with other VRFs that address similar reliability goals in different Reliability Standards.
FERC VRF G4 Discussion Guideline 4- Consistency with NERC Definitions of VRFs	This VRF is consistent with the definition of a lower VRF requirement per the criteria filed with FERC as part of the ERO's Sanctions Guidelines.
FERC VRF G5 Discussion Guideline 5- Treatment of Requirements that Co-mingle More than One Obligation	This requirement does mingle a higher risk reliability objective and risk reliability objective. Therefore, the VRF reflects the risk of the whole requirement.

VSLs for CIP-014-4, Requirement R5			
Lower	**Moderate**	**High**	**Severe**
The Transmission Owner performed a risk assessment, but did so after 36 calendar months, but less than or equal to 38 calendar months. OR	The Transmission Owner performed a risk assessment, but did so after 38 calendar months, but less than or equal to 40 calendar months. OR	The Transmission owner performed a risk assessment, but did so after 40 calendar months, but less than or equal to 42 calendar months. OR	The Transmission Owner performed a risk assessment, but did so after more than 42 calendar months. OR The Transmission Owner

The Transmission Owner performed a risk assessment inconsistent with one of the methodology requirements listed in Requirement R3, Parts 3.1 through 3.4.	The Transmission Owner performed a risk assessment inconsistent with two of the methodology requirements listed in Requirement R3, Parts 3.1 through 3.4.	The Transmission Owner performed a risk assessment inconsistent with three or more of the methodology requirements listed in Requirement R3, Parts 3.1 through 3.4. OR The Transmission Owner performed a risk assessment, but failed to include the primary control center identified in Part 5.2.	performed a risk assessment inconsistent with four of the methodology requirements listed in Requirement R3, Parts 3.1 through 3.4.

VSL Justifications for CIP-014-4, Requirement R5	
FERC VSL G1 Violation Severity Level Assignments Should Not Have the Unintended Consequence of Lowering the Current Level of Compliance	This Requirement is a part of CIP-014-3 Requirement R1. After breaking down to five (5) different Requirements, it does not serve as High VSL since new Requirement R1 remains as High VSL.
FERC VSL G2 Violation Severity Level Assignments Should Ensure Uniformity and Consistency in the Determination of Penalties Guideline 2a: The Single Violation Severity Level Assignment Category for "Binary" Requirements Is Not	The proposed VSLs are not binary and do not use any ambiguous terminology, thereby supporting uniformity and consistency in the determination of similar penalties for similar violations.

VSL Justifications for CIP-014-4, Requirement R5	
Consistent Guideline 2b: Violation Severity Level Assignments that Contain Ambiguous Language	
FERC VSL G3 Violation Severity Level Assignment Should Be Consistent with the Corresponding Requirement	The proposed VSLs use the same terminology as used in the associated requirement and are, therefore, consistent with the requirement.
FERC VSL G4 Violation Severity Level Assignment Should Be Based on A Single Violation, Not on A Cumulative Number of Violations	Each VSL is based on a single violation and not cumulative violations.

VRF Justification for CIP-014-4, Requirement R6
The VRF did not change from the previously FERC approved CIP-014-3 Reliability Standard.

VSL Justification for CIP-014-4, Requirement R6
The Requirement is the same as Requirement R2 in CIP-014-3. The VSL did not change from the previously FERC approved CIP-014-3 Reliability Standard.

VRF Justification for CIP-014-4, Requirement R7
The VRF did not change from the previously FERC approved CIP-014-3 Reliability Standard.

VSL Justification for CIP-014-4, Requirement R7
The Requirement is the same as Requirement R3 in CIP-014-3. The VSL did not change from the previously FERC approved CIP-014-3 Reliability Standard.

VRF Justification for CIP-014-4, Requirement R8

The Requirement is the same as Requirement R4 in CIP-014-3. The VRF did not change from the previously FERC approved CIP-014-3 Reliability Standard.

VSL Justification for CIP-014-4, Requirement R8

The Requirement is the same as Requirement R4 in CIP-014-3. The VSL did not change from the previously FERC approved CIP-014-3 Reliability Standard.

VRF Justification for CIP-014-4, Requirement R9

The Requirement is the same as Requirement R5 in CIP-014-3. The VRF did not change from the previously FERC approved CIP-014-3 Reliability Standard.

VSL Justification for CIP-014-4, Requirement R9

The Requirement is the same as Requirement R5 in CIP-014-3. The VSL did not change from the previously FERC approved CIP-014-3 Reliability Standard.

VRF Justification for CIP-014-4, Requirement R10

The Requirement is the same as Requirement R6 in CIP-014-3. The VRF did not change from the previously FERC approved CIP-014-3 Reliability Standard.

VSL Justification for CIP-014-4, Requirement R10

The Requirement is the same as Requirement R6 in CIP-014-3. The VSL did not change from the previously FERC approved CIP-014-3 Reliability Standard.

NERC
NORTH AMERICAN ELECTRIC RELIABILITY CORPORATION

Violation Risk Factor and Violation Severity Level Justifications

Project 2023-06 CIP-014 Risk Assessment Refinement (CIP-014-4)

This document provides the standard drafting team's (SDT's) justification for assignment of violation risk factors (VRFs) and violation severity levels (VSLs) for each requirement in CIP-014-4. Each requirement is assigned a VRF and a VSL. These elements support the determination of an initial value range for the Base Penalty Amount regarding violations of requirements in FERC-approved Reliability Standards, as defined in the Electric Reliability Organizations (ERO) Sanction Guidelines. The SDT applied the following NERC criteria and FERC Guidelines when developing the VRFs and VSLs for the requirements.

NERC Criteria for Violation Risk Factors

High Risk Requirement

A requirement that, if violated, could directly cause or contribute to Bulk Electric System instability, separation, or a cascading sequence of failures, or could place the Bulk Electric System at an unacceptable risk of instability, separation, or cascading failures; or, a requirement in a planning time frame that, if violated, could, under emergency, abnormal, or restorative conditions anticipated by the preparations, directly cause or contribute to Bulk Electric System instability, separation, or a cascading sequence of failures, or could place the Bulk Electric System at an unacceptable risk of instability, separation, or cascading failures, or could hinder restoration to a normal condition.

Medium Risk Requirement

A requirement that, if violated, could directly affect the electrical state or the capability of the Bulk Electric System, or the ability to effectively monitor and control the Bulk Electric System. However, violation of a medium risk requirement is unlikely to lead to Bulk Electric System instability, separation, or cascading failures; or, a requirement in a planning time frame that, if violated, could, under emergency, abnormal, or restorative conditions anticipated by the preparations, directly and adversely affect the electrical state or capability of the Bulk Electric System, or the ability to effectively monitor, control, or restore the Bulk Electric System. However, violation of a medium risk requirement is unlikely, under emergency, abnormal, or restoration conditions anticipated by the preparations, to lead to Bulk Electric System instability, separation, or cascading failures, nor to hinder restoration to a normal condition.

Lower Risk Requirement
A requirement that is administrative in nature and a requirement that, if violated, would not be expected to adversely affect the electrical state or capability of the Bulk Electric System, or the ability to effectively monitor and control the Bulk Electric System; or, a requirement that is administrative in nature and a requirement in a planning time frame that, if violated, would not, under the emergency, abnormal, or restorative conditions anticipated by the preparations, be expected to adversely affect the electrical state or capability of the Bulk Electric System, or the ability to effectively monitor, control, or restore the Bulk Electric System.

FERC Guidelines for Violation Risk Factors

Guideline (1) – Consistency with the Conclusions of the Final Blackout Report

FERC seeks to ensure that VRFs assigned to Requirements of Reliability Standards in these identified areas appropriately reflect their historical critical impact on the reliability of the Bulk-Power System. In the VSL Order, FERC listed critical areas (from the Final Blackout Report) where violations could severely affect the reliability of the Bulk-Power System:

- Emergency operations
- Vegetation management
- Operator personnel training
- Protection systems and their coordination
- Operating tools and backup facilities
- Reactive power and voltage control
- System modeling and data exchange
- Communication protocol and facilities
- Requirements to determine equipment ratings
- Synchronized data recorders
- Clearer criteria for operationally critical facilities
- Appropriate use of transmission loading relief.

Guideline (2) – Consistency within a Reliability Standard
FERC expects a rational connection between the sub-Requirement VRF assignments and the main Requirement VRF assignment.

Guideline (3) – Consistency among Reliability Standards
FERC expects the assignment of VRFs corresponding to Requirements that address similar reliability goals in different Reliability Standards would be treated comparably.

Guideline (4) – Consistency with NERC's Definition of the Violation Risk Factor Level
Guideline (4) was developed to evaluate whether the assignment of a particular VRF level conforms to NERC's definition of that risk level.

Guideline (5) – Treatment of Requirements that Co-mingle More Than One Obligation
Where a single Requirement co-mingles a higher risk reliability objective and a lesser risk reliability objective, the VRF assignment for such Requirements must not be watered down to reflect the lower risk level associated with the less important objective of the Reliability Standard.

NERC Criteria for Violation Severity Levels

VSLs define the degree to which compliance with a requirement was not achieved. Each requirement must have at least one VSL. While it is preferable to have four VSLs for each requirement, some requirements do not have multiple "degrees" of noncompliant performance and may have only one, two, or three VSLs.

VSLs should be based on NERC's overarching criteria shown in the table below:

Lower VSL	Moderate VSL	High VSL	Severe VSL
The performance or product measured almost meets the full intent of the requirement.	The performance or product measured meets the majority of the intent of the requirement.	The performance or product measured does not meet the majority of the intent of the requirement, but does meet some of the intent.	The performance or product measured does not substantively meet the intent of the requirement.

FERC Order of Violation Severity Levels

The FERC VSL guidelines are presented below, followed by an analysis of whether the VSLs proposed for each requirement in the standard meet the FERC Guidelines for assessing VSLs:

Guideline (1) – Violation Severity Level Assignments Should Not Have the Unintended Consequence of Lowering the Current Level of Compliance

Compare the VSLs to any prior levels of non-compliance and avoid significant changes that may encourage a lower level of compliance than was required when levels of non-compliance were used.

Guideline (2) – Violation Severity Level Assignments Should Ensure Uniformity and Consistency in the Determination of Penalties

A violation of a "binary" type requirement must be a "Severe" VSL.
Do not use ambiguous terms such as "minor" and "significant" to describe noncompliant performance.

Guideline (3) – Violation Severity Level Assignment Should Be Consistent with the Corresponding Requirement

VSLs should not expand on what is required in the requirement.

Guideline (4) – Violation Severity Level Assignment Should Be Based on a Single Violation, Not on a Cumulative Number of Violations

Unless otherwise stated in the requirement, each instance of non-compliance with a requirement is a separate violation. Section 4 of the Sanction Guidelines states that assessing penalties on a per violation per day basis is the "default" for penalty calculations.

VRF Justification for CIP-014-4, Requirement R1

The VRF did not change from the previously FERC approved CIP-014-3 Reliability Standard.

VSLs for CIP-014-4, Requirement R1			
Lower	**Moderate**	**High**	**Severe**
The Transmission Owner documented ~~identified~~ a list of applicable Transmission station(s) or Transmission substation(s) per Attachment 1, but did so after 36 calendar months, but less than or equal to 38 calendar months. OR The Transmission Owner documented ~~identified~~ a list of applicable Transmission station(s) or Transmission substation(s)~~substations~~, but failed to identify less than or equal to 10% of the applicable Transmission station(s) or Transmission substation(s) per Attachment 1.	The Transmission Owner documented ~~identified~~ a list of applicable Transmission station(s) or Transmission substation(s) per Attachment 1, but did so after 38 calendar months, but less than or equal to 40 calendar months. OR The Transmission Owner documented ~~identified~~ a list of applicable Transmission station(s) or Transmission substation(s)~~substations~~, but failed to identify more than 10% and less than or equal to 20% of the applicable Transmission station(s) or Transmission substation(s) per Attachment 1.	The Transmission Owner documented ~~identified~~ a list of applicable Transmission station(s) or Transmission substation(s) per Attachment 1, but did so after 40 calendar months, but less than or equal to 42 calendar months. OR The Transmission Owner documented ~~identified~~ a list of applicable Transmission station(s) or Transmission substation(s)~~substations~~, but failed to identify more than 20% and less than or equal to 30% of the applicable Transmission station(s) or Transmission substation(s) per Attachment 1.	The Transmission Owner failed to document ~~identify~~ a list of applicable Transmission station(s) or Transmission substation(s) per Attachment 1. OR The Transmission Owner documented ~~identified~~ a list of applicable Transmission station(s) or Transmission substation(s) per Attachment 1, but did so after more than 42 calendar months. OR The Transmission Owner identified a list of applicable Transmission station(s) or Transmission substation(s)~~substations~~, but failed to identify more than 30%

		~~The Transmission Owner had insufficient documented criteria for determining when Transmission station(s) or Transmission substation(s) were in proximity for those identified in Requirement R1.~~ ~~OR~~ ~~The Transmission Owner failed to use the documented criteria to identify all Transmission station(s) or Transmission substation(s) in proximity.~~	of the applicable Transmission station(s) or Transmission substation(s) per Attachment 1. ~~The Transmission Owner did not have documented criteria to determine when Transmission station(s) or Transmission substation(s) were in proximity for those identified in Requirement R1.~~ ~~OR~~ ~~The Transmission Owner failed to use the documented criteria to identify which Transmission station(s) or Transmission substation(s) in proximity.~~

VSL Justifications for CIP-014-4, Requirement R1	
FERC VSL G1 Violation Severity Level Assignments Should Not Have the Unintended Consequence of Lowering the Current Level of Compliance	The requirement is a part of CIP-014-3 Requirement R1. Therefore, the proposed VSLs do not have the unintended consequence of lowering the level of compliance.
FERC VSL G2 Violation Severity Level Assignments Should Ensure Uniformity and Consistency in the Determination of Penalties Guideline 2a: The Single Violation	The proposed VSLs are not binary and do not use any ambiguous terminology, thereby supporting uniformity and consistency in the determination of similar penalties for similar violations.

VSL Justifications for CIP-014-4, Requirement R1	
Severity Level Assignment Category for "Binary" Requirements Is Not Consistent Guideline 2b: Violation Severity Level Assignments that Contain Ambiguous Language	
FERC VSL G3 Violation Severity Level Assignment Should Be Consistent with the Corresponding Requirement	The proposed VSLs use the same terminology as used in the associated requirement and are, therefore, consistent with the requirement.
FERC VSL G4 Violation Severity Level Assignment Should Be Based on A Single Violation, Not on A Cumulative Number of Violations	Each VSL is based on a single violation and not cumulative violations.

VRF Justifications for CIP-014-4, Requirement R2	
Proposed VRF	~~Lower~~Medium
NERC VRF Discussion	This Requirement is a part of CIP-014-3 Requirement R1. After breaking down to five (5) different Requirements, this Requirement is less severe than Requirement R1, it does not serve as High VRF since new Requirement R1 remains as High VRF.
FERC VRF G1 Discussion Guideline 1- Consistency with Blackout Report	This VRF is consistent with the identified areas from the FERC list of critical areas in the Final Blackout Report.
FERC VRF G2 Discussion Guideline 2- Consistency within a	The VRF for Requirement R2 is consistent with those connections between the sub-Requirement VRF assignments and the main Requirement VRF assignment.

VRF Justifications for CIP-014-4, Requirement R2	
Proposed VRF	~~Lower~~Medium
Reliability Standard	
FERC VRF G3 Discussion Guideline 3- Consistency among Reliability Standards	This VRF is consistent with other VRFs that address similar reliability goals in different Reliability Standards.
FERC VRF G4 Discussion Guideline 4- Consistency with NERC Definitions of VRFs	This VRF is consistent with the definition of a lower VRF requirement per the criteria filed with FERC as part of the ERO's Sanctions Guidelines.
FERC VRF G5 Discussion Guideline 5- Treatment of Requirements that Co-mingle More than One Obligation	This requirement does not mingle a higher risk reliability objective and a lesser risk reliability objective. Therefore, the VRF reflects the risk of the whole requirement.

VSLs for CIP-014-4, Requirement R2			
Lower	**Moderate**	**High**	**Severe**
		~~The Transmission Owner had insufficient documented criteria for determining when Transmission station(s) or Transmission substation(s) were in proximity for those identified in Requirement R1.~~ ~~OR~~ ~~The Transmission Owner failed to use the documented criteria~~	The Transmission Owner did not have documented criteria to determine when Transmission station(s) or Transmission substation(s) were in proximity for those identified in Requirement R1. OR The Transmission Owner failed to use the documented criteria to

		~~to identify all Transmission station(s) or Transmission substation(s) in proximity.~~	identify which Transmission station(s) or Transmission substation(s) are in proximity to each other.

VSL Justifications for CIP-014-4, Requirement R2	
FERC VSL G1 Violation Severity Level Assignments Should Not Have the Unintended Consequence of Lowering the Current Level of Compliance	This Requirement is a part of CIP-014-3 Requirement R1. After breaking down to five (5) different Requirements, it does not serve as High VSL since new Requirement R1 remains as High VSL.
FERC VSL G2 Violation Severity Level Assignments Should Ensure Uniformity and Consistency in the Determination of Penalties Guideline 2a: The Single Violation Severity Level Assignment Category for "Binary" Requirements Is Not Consistent Guideline 2b: Violation Severity Level Assignments that Contain Ambiguous Language	The proposed VSLs are not binary and do not use any ambiguous terminology, thereby supporting uniformity and consistency in the determination of similar penalties for similar violations.
FERC VSL G3 Violation Severity Level Assignment Should Be Consistent with the Corresponding Requirement	The proposed VSLs use the same terminology as used in the associated requirement and are, therefore, consistent with the requirement.
FERC VSL G4	Each VSL is based on a single violation and not cumulative violations.

VSL Justifications for CIP-014-4, Requirement R2	
Violation Severity Level Assignment Should Be Based on A Single Violation, Not on A Cumulative Number of Violations	

VRF Justifications for CIP-014-4, Requirement R3	
Proposed VRF	~~Lower~~High
NERC VRF Discussion	This Requirement is a part of CIP-014-3 Requirement R1. After breaking down to five (5) different Requirements, ~~it does not serve~~the drafting team believes that it should remain as High VRF since new Requirement R1 remains as High VRF.
FERC VRF G1 Discussion Guideline 1- Consistency with Blackout Report	This VRF is consistent with the identified areas from the FERC list of critical areas in the Final Blackout Report.
FERC VRF G2 Discussion Guideline 2- Consistency within a Reliability Standard	The VRF for Requirement R3 is consistent with those connections between the sub-Requirement VRF assignments and the main Requirement VRF assignment.
FERC VRF G3 Discussion Guideline 3- Consistency among Reliability Standards	This VRF is consistent with other VRFs that address similar reliability goals in different Reliability Standards.
FERC VRF G4 Discussion Guideline 4- Consistency with NERC Definitions of VRFs	This VRF is consistent with the definition of a lower VRF requirement per the criteria filed with FERC as part of the ERO's Sanctions Guidelines.
FERC VRF G5 Discussion Guideline 5- Treatment of Requirements that Co-mingle More	This requirement does ~~not~~ mingle a higher risk reliability objective and ~~a lesser~~ risk reliability objective. Therefore, the VRF reflects the risk of the whole requirement.

VRF Justifications for CIP-014-4, Requirement R3	
Proposed VRF	~~Lower~~High
than One Obligation	

VSLs for CIP-014-4, Requirement R3			
Lower	**Moderate**	**High**	**Severe**
The Transmission Owner has a risk assessment methodology that failed to include one of the requirements listed in ~~Requirement R3,~~ Parts 3.1 through 3.~~4~~6.	The Transmission Owner has a risk assessment methodology that failed to include two of the requirements listed in ~~Requirement R3,~~ Parts 3.1 through 3.~~4~~6.	The Transmission Owner has a risk assessment methodology that failed to include three or more of the requirements listed in ~~Requirement R3,~~ Parts 3.1 through 3.~~4~~6.	The Transmission Owner has a risk assessment methodology that failed to include four of the requirements listed in Parts 3.1 through 3.4. OR The Transmission Owner does not have a risk assessment methodology.

VSL Justifications for CIP-014-4, Requirement R3	
FERC VSL G1 Violation Severity Level Assignments Should Not Have the Unintended Consequence of Lowering the Current Level of Compliance	This Requirement is a part of CIP-014-3 Requirement R1. After breaking down to five (5) different Requirements, it does not serve as High VSL since new Requirement R1 remains as High VSL.
FERC VSL G2 Violation Severity Level Assignments Should Ensure Uniformity and Consistency in the Determination of	The proposed VSLs are not binary and do not use any ambiguous terminology, thereby supporting uniformity and consistency in the determination of similar penalties for similar violations.

VSL Justifications for CIP-014-4, Requirement R3	
Penalties Guideline 2a: The Single Violation Severity Level Assignment Category for "Binary" Requirements Is Not Consistent Guideline 2b: Violation Severity Level Assignments that Contain Ambiguous Language	
FERC VSL G3 Violation Severity Level Assignment Should Be Consistent with the Corresponding Requirement	The proposed VSLs use the same terminology as used in the associated requirement and are, therefore, consistent with the requirement.
FERC VSL G4 Violation Severity Level Assignment Should Be Based on A Single Violation, Not on A Cumulative Number of Violations	Each VSL is based on a single violation and not cumulative violations.

VRF Justifications for CIP-014-4, Requirement R4	
Proposed VRF	~~Lower~~Medium
NERC VRF Discussion	This Requirement is a part of CIP-014-3 Requirement R1. After breaking down to five (5) different Requirements, it does not serve as High VRF since new Requirement R1 remains as High VRF.
FERC VRF G1 Discussion Guideline 1- Consistency with Blackout Report	This VRF is consistent with the identified areas from the FERC list of critical areas in the Final Blackout Report.

VRF Justifications for CIP-014-4, Requirement R4	
Proposed VRF	~~Lower~~Medium
FERC VRF G2 Discussion Guideline 2- Consistency within a Reliability Standard	The VRF for Requirement R4 is consistent with those connections between the sub-Requirement VRF assignments and the main Requirement VRF assignment.
FERC VRF G3 Discussion Guideline 3- Consistency among Reliability Standards	This VRF is consistent with other VRFs that address similar reliability goals in different Reliability Standards.
FERC VRF G4 Discussion Guideline 4- Consistency with NERC Definitions of VRFs	This VRF is consistent with the definition of a lower VRF requirement per the criteria filed with FERC as part of the ERO's Sanctions Guidelines.
FERC VRF G5 Discussion Guideline 5- Treatment of Requirements that Co-mingle More than One Obligation	This requirement does not mingle a higher risk reliability objective and a lesser risk reliability objective. Therefore, the VRF reflects the risk of the whole requirement.

VSLs for CIP-014-4, Requirement R4			
Lower	**Moderate**	**High**	**Severe**
The Transmission Owner failed to coordinate less than or equal to 25% of jointly owned applicable Transmission station(s) and Transmission substation(s) with other owner(s).~~performed a risk assessment, but did so after 36~~	The Transmission Owner failed to coordinate more than 25% and less than or equal to 50% of jointly owned applicable Transmission station(s) and Transmission substation(s) with other owner(s).~~performed a risk assessment, but did so after 38~~	The Transmission Owner failed to coordinate more than 50% and less than or equal to 75% of jointly owned applicable Transmission station(s) and Transmission substation(s) with other owner(s).~~performed a risk assessment inconsistent with~~	The Transmission Owner failed to coordinate more than 75% and less than or equal to 100% any evidence of jointly owned applicable Transmission station(s) and Transmission substation(s) with other owner(s).~~performed a risk assessment, but did so after~~

~~calendar months, but less than or equal to 38 calendar months.~~ ~~OR~~ ~~The Transmission Owner performed a risk assessment inconsistent with one of the methodology requirements listed in Requirement R3, Parts 3.1 through 3.6~~	~~calendar months, but less than or equal to 40 calendar months.~~ ~~OR~~ ~~The Transmission Owner performed a risk assessment inconsistent with two of the methodology requirements listed in Requirement R3, Parts 3.1 through 3.6.~~ ~~OR~~ ~~The Transmission Owner performed a risk assessment that was insufficient with respect to Requirement R4, Part 4.2.~~	~~three or more of the methodology requirements listed in Requirement R3, Parts 3.1 through 3.6.~~ ~~OR~~ ~~The Transmission Owner performed a risk assessment, but failed to include the primary control center identified in Requirement R4, Part 4.3.~~	~~more than 42 calendar months.~~

VSL Justifications for CIP-014-4, Requirement R4	
FERC VSL G1 Violation Severity Level Assignments Should Not Have the Unintended Consequence of Lowering the Current Level of Compliance	This Requirement is a part of CIP-014-3 Requirement R1. After breaking down to five (5) different Requirements, it does not serve as High VSL since new Requirement R1 remains as High VSL.
FERC VSL G2 Violation Severity Level Assignments Should Ensure Uniformity and Consistency in the Determination of Penalties Guideline 2a: The Single Violation	The proposed VSLs are not binary and do not use any ambiguous terminology, thereby supporting uniformity and consistency in the determination of similar penalties for similar violations.

VSL Justifications for CIP-014-4, Requirement R4	
Severity Level Assignment Category for "Binary" Requirements Is Not Consistent Guideline 2b: Violation Severity Level Assignments that Contain Ambiguous Language	
FERC VSL G3 Violation Severity Level Assignment Should Be Consistent with the Corresponding Requirement	The proposed VSLs use the same terminology as used in the associated requirement and are, therefore, consistent with the requirement.
FERC VSL G4 Violation Severity Level Assignment Should Be Based on A Single Violation, Not on A Cumulative Number of Violations	Each VSL is based on a single violation and not cumulative violations.

VRF Justifications for CIP-014-4, Requirement R5	
Proposed VRF	~~Lower~~High
NERC VRF Discussion	This Requirement is a part of CIP-014-3 Requirement R1. After breaking down to five (5) different Requirements, ~~it does not serve~~the drafting team believe that Requirement should remain as High VRF ~~since new~~as the existing Requirement R1 ~~remains~~ as High VRF.
FERC VRF G1 Discussion Guideline 1- Consistency with Blackout Report	This VRF is consistent with the identified areas from the FERC list of critical areas in the Final Blackout Report.
FERC VRF G2 Discussion Guideline 2- Consistency within a	The VRF for Requirement R5 is consistent with those connections between the sub-Requirement VRF assignments and the main Requirement VRF assignment.

VRF Justifications for CIP-014-4, Requirement R5	
Proposed VRF	~~Lower~~High
Reliability Standard	
FERC VRF G3 Discussion Guideline 3- Consistency among Reliability Standards	This VRF is consistent with other VRFs that address similar reliability goals in different Reliability Standards.
FERC VRF G4 Discussion Guideline 4- Consistency with NERC Definitions of VRFs	This VRF is consistent with the definition of a lower VRF requirement per the criteria filed with FERC as part of the ERO's Sanctions Guidelines.
FERC VRF G5 Discussion Guideline 5- Treatment of Requirements that Co-mingle More than One Obligation	This requirement does ~~not~~ mingle a higher risk reliability objective and ~~a lesser~~ risk reliability objective. Therefore, the VRF reflects the risk of the whole requirement.

VSLs for CIP-014-4, Requirement R5			
Lower	**Moderate**	**High**	**Severe**
The Transmission Owner performed a risk assessment, but did so after 36 calendar months, but less than or equal to 38 calendar months. OR The Transmission Owner performed a risk assessment inconsistent with one of the methodology requirements	The Transmission Owner performed a risk assessment, but did so after 38 calendar months, but less than or equal to 40 calendar months. OR The Transmission Owner performed a risk assessment inconsistent with two of the methodology requirements	The Transmission owner performed a risk assessment, but did so after 40 calendar months, but less than or equal to 42 calendar months. OR The Transmission Owner performed a risk assessment inconsistent with three or more of the methodology	The Transmission Owner performed a risk assessment, but did so after more than 42 calendar months. OR The Transmission Owner performed a risk assessment inconsistent with four of the methodology requirements listed in Requirement R3, Parts

listed in Requirement R3, Parts 3.1 through 3.4.~~6~~	listed in Requirement R3, Parts 3.1 through 3.~~4~~6. ~~OR~~ ~~The Transmission Owner performed a risk assessment that was insufficient with respect to Requirement R4, Part 4.2.~~	requirements listed in Requirement R3, Parts 3.1 through 3.~~4~~6. OR The Transmission Owner performed a risk assessment, but failed to include the primary control center identified in ~~Requirement R4,~~ Part ~~4.3~~5.2.	3.1 through 3.4.

VSL Justifications for CIP-014-4, Requirement R5	
FERC VSL G1 Violation Severity Level Assignments Should Not Have the Unintended Consequence of Lowering the Current Level of Compliance	This Requirement is a part of CIP-014-3 Requirement R1. After breaking down to five (5) different Requirements, it does not serve as High VSL since new Requirement R1 remains as High VSL.
FERC VSL G2 Violation Severity Level Assignments Should Ensure Uniformity and Consistency in the Determination of Penalties Guideline 2a: The Single Violation Severity Level Assignment Category for "Binary" Requirements Is Not Consistent Guideline 2b: Violation Severity Level Assignments that Contain Ambiguous Language	The proposed VSLs are not binary and do not use any ambiguous terminology, thereby supporting uniformity and consistency in the determination of similar penalties for similar violations.

VSL Justifications for CIP-014-4, Requirement R5	
FERC VSL G3 Violation Severity Level Assignment Should Be Consistent with the Corresponding Requirement	The proposed VSLs use the same terminology as used in the associated requirement and are, therefore, consistent with the requirement.
FERC VSL G4 Violation Severity Level Assignment Should Be Based on A Single Violation, Not on A Cumulative Number of Violations	Each VSL is based on a single violation and not cumulative violations.

~~VRF Justifications for CIP-014-4, Requirement R6~~	
~~Proposed VRF~~	~~Lower~~
~~NERC VRF Discussion~~	~~This Requirement is Requirement R2 in CIP-014-3. The drafting team believes the VRF should be the same as Requirement R1 in CIP-014-3.~~
~~**FERC VRF G1 Discussion**~~ ~~Guideline 1- Consistency with Blackout Report~~	~~This VRF is consistent with the identified areas from the FERC list of critical areas in the Final Blackout Report.~~
~~**FERC VRF G2 Discussion**~~ ~~Guideline 2- Consistency within a Reliability Standard~~	~~The VRF for Requirement R6 is consistent with those connections between the sub-Requirement VRF assignments and the main Requirement VRF assignment.~~
~~**FERC VRF G3 Discussion**~~ ~~Guideline 3- Consistency among Reliability Standards~~	~~This VRF is consistent with other VRFs that address similar reliability goals in different Reliability Standards.~~
~~**FERC VRF G4 Discussion**~~	~~This VRF is consistent with the definition of a lower VRF requirement per the criteria filed with FERC as part of the ERO's Sanctions Guidelines.~~

~~VRF Justifications for CIP-014-4, Requirement R6~~	
~~Proposed VRF~~	~~Lower~~
~~Guideline 4- Consistency with NERC Definitions of VRFs~~	
~~**FERC VRF G5 Discussion**~~ ~~Guideline 5- Treatment of Requirements that Co-mingle More than One Obligation~~	~~This requirement does not mingle a higher risk reliability objective and a lesser risk reliability objective. Therefore, the VRF reflects the risk of the whole requirement.~~

VRF Justification for CIP-014-4, Requirement R6

The VRF did not change from the previously FERC approved CIP-014-3 Reliability Standard.

VSL Justification for CIP-014-4, Requirement R6

The Requirement is the same as Requirement R2 in CIP-014-3. The VSL did not change from the previously FERC approved CIP-014-3 Reliability Standard.

~~VRF Justifications for CIP-014-4, Requirement R7~~	
~~Proposed VRF~~	~~Lower~~
~~NERC VRF Discussion~~	~~This Requirement is Requirement R3 in CIP-014-3. The drafting team believes the VRF should be higher, from Low to Medium.~~
~~**FERC VRF G1 Discussion**~~ ~~Guideline 1- Consistency with Blackout Report~~	~~This VRF is consistent with the identified areas from the FERC list of critical areas in the Final Blackout Report.~~
~~**FERC VRF G2 Discussion**~~ ~~Guideline 2- Consistency within a Reliability Standard~~	~~The VRF for Requirement R7 is consistent with those connections between the sub-Requirement VRF assignments and the main Requirement VRF assignment.~~

~~VRF Justifications for CIP-014-4, Requirement R7~~	
~~Proposed VRF~~	~~Lower~~
~~FERC VRF G3 Discussion~~ ~~Guideline 3- Consistency among Reliability Standards~~	~~This VRF is consistent with other VRFs that address similar reliability goals in different Reliability Standards.~~
~~FERC VRF G4 Discussion~~ ~~Guideline 4- Consistency with NERC Definitions of VRFs~~	~~This VRF is consistent with the definition of a lower VRF requirement per the criteria filed with FERC as part of the ERO's Sanctions Guidelines.~~
~~FERC VRF G5 Discussion~~ ~~Guideline 5- Treatment of Requirements that Co-mingle More than One Obligation~~	~~This requirement does not mingle a higher risk reliability objective and a lesser risk reliability objective. Therefore, the VRF reflects the risk of the whole requirement.~~

VRF Justification for CIP-014-4, Requirement R7

The VRF did not change from the previously FERC approved CIP-014-3 Reliability Standard.

VSL Justification for CIP-014-4, Requirement R7

The Requirement is the same as Requirement R3 in CIP-014-3. The VSL did not change from the previously FERC approved CIP-014-3 Reliability Standard.

VRF Justification for CIP-014-4, Requirement R8

The Requirement is the same as Requirement R4 in CIP-014-3. The VRF did not change from the previously FERC approved CIP-014-3 Reliability Standard.

VSL Justification for CIP-014-4, Requirement R8

The Requirement is the same as Requirement R4 in CIP-014-3. The VSL did not change from the previously FERC approved CIP-014-3 Reliability Standard.

VRF Justification for CIP-014-4, Requirement R9

The Requirement is the same as Requirement R5 in CIP-014-3. The VRF did not change from the previously FERC approved CIP-014-3 Reliability Standard.

VSL Justification for CIP-014-4, Requirement R9

The Requirement is the same as Requirement R5 in CIP-014-3. The VSL did not change from the previously FERC approved CIP-014-3 Reliability Standard.

VRF Justification for CIP-014-4, Requirement R10

The Requirement is the same as Requirement R6 in CIP-014-3. The VRF did not change from the previously FERC approved CIP-014-3 Reliability Standard.

VSL Justification for CIP-014-4, Requirement R10

The Requirement is the same as Requirement R6 in CIP-014-3. The VSL did not change from the previously FERC approved CIP-014-3 Reliability Standard.

NERC
NORTH AMERICAN ELECTRIC RELIABILITY CORPORATION

Technical Rationale

Project 2023-06 CIP-014 Risk Assessment Refinement
Reliability Standard CIP-014-4 | September 2024

CIP-014-4 – Physical Security

In performing the risk assessment, the Transmission Owner should first identify their population of Transmission stations and Transmission substations that meet the criteria contained in Attachment 1. The Standard requires the Transmission Owner to perform a risk assessment, consisting of a transmission analysis, to determine which of those Transmission stations and Transmission Substations, if rendered inoperable or damaged, could result in instability, uncontrolled separation, or Cascading within an Interconnection.

The purpose of Reliability Standard CIP-014 is to protect Transmission stations and Transmission substations, and their associated primary control centers, that if rendered inoperable or damaged as a result of a physical attack could result in instability, uncontrolled separation, or Cascading within an Interconnection. To properly identify candidates for such Transmission station(s) and Transmission substation(s), the Transmission Owner shall evaluate the criteria listed in Attachment 1.

Rationale for Requirement R1

Performing Risk Assessments

Requirement R1 is developed to ensure that each Transmission Owner establishes a list of applicable Transmission station(s) or Transmission substation(s) in accordance with Attachment 1. Aligning the 36 months look ahead in Requirement R1 with the 36 month risk assessment cycle ensures that system topology of the cases used to assess applicability is consistent with the system topology in the risk assessment models.

Rationale for Requirement R2

Each Transmission Owner shall, at a minimum, consider the specifications in Requirement R2 for general applicability to their systems, and whether specifications and thresholds need to be stipulated for each Parts 2.1 and 2.2 in their documented criteria.

A certain amount of discretion and flexibility is intended to be allowable for each Transmission Owner in their respective proximity criteria to document, establish, and demonstrate from a technical basis that various aspects of proximity for their Transmission station(s) or Transmission substation(s) either are or are not appropriate to consider in their risk assessments.

Rationale for Requirement R3

Per Requirement R3, each Transmission Owner is required to have a risk assessment methodology, but the SDT intends for each TO to have flexibility to define its own methodology, including the criteria by which analytical results will be examined to identify Transmission station(s) or Transmission substation(s)

that if rendered inoperable or damaged as a result of a physical attack could result in instability, uncontrolled separation, or Cascading within an Interconnection. The TO is not required to develop its own methodology and is free to use a methodology developed elsewhere, such as in coordination with neighboring TOs or ISOs.

Rationale for Requirement R3, Part 3.1
TOs should have the flexibility to determine the amount of acceptable load loss, acceptable generation loss, or other measurements of system response when determining the impact of an event to the Transmission system. Criteria for measures such as load loss or generation loss should consider the impact to the Interconnection instead of local impacts.

Large loss of generation or load due to the evaluated disturbance, as well as consequences of isolating faulted equipment, could result in severe System impacts. The documented risk assessment methodology shall include the amount of acceptable load loss, the amount of acceptable generation loss, and post-event response resulting in instability, uncontrolled separation, or Cascading within an Interconnection. Conditions and thresholds used for determining critical Transmission station(s) or Transmission substation(s), i.e., those that if rendered inoperable or damaged as a result of a physical attack could result in instability, uncontrolled separation, or Cascading within an Interconnection, should be part of the documented risk assessment methodology.

It is up to the TO to identify post-event measures that can be used to assess the criticality of a Transmission substation or Transmission substation. Suggested measures are listed below. A TO can decide that one or more of the items are not applicable to their location within the interconnection and if any additional items should be included

These thresholds can be treated as proxies for other conditions such as excessive frequency deviation.

- Steady state voltages
- Transient voltage response
- Thermal loading of Facilities
- Relay loadability
- Rotor angle stability
- Frequency exceeding generator limits
- Frequency stability
- Acceptable damping of oscillations
- Cascading line tripping
- Steady-state voltage stability

Rationale for Requirement R3, Part 3.2

The performance of both steady state and dynamics simulations is required for all applicable Transmission station(s) and substation(s). Dynamic simulations are required by the SAR after NERC and FERC determined that steady-state simulations alone are insufficient for determining whether the loss of a Transmission station or Transmission substation could result in instability, uncontrolled separation, or Cascading within an Interconnection.

Transmission Owners shall develop documented criteria for the conditions listed in Requirement R3, Part 3.1.1, which includes branch thermal exceedance thresholds, bus voltage exceedance thresholds, load loss thresholds, generation loss thresholds, etc.

Rationale for Requirement R3, Part 3.3
The DT believes that simulation of a fault is a reasonable assumption for possible events that could impact a single Transmission station or Transmission substation, and for events that could simultaneously impact multiple Transmission stations or Transmission substations.

Rationale for Requirement R3, Part 3.4
The requirement that simulations shall assume the loss of communications and system protection is consistent with the SAR. It is also consistent with the use of "inoperable" in the standard.

Rationale for Requirement R3, Part 3.4.1
The DT believes that the use of delayed or remote clearing times is consistent with the description of a Transmission station or Transmission substation being rendered inoperable by an event that disabled local protection systems.

Rationale for Requirement R3, Part 3.4.2
While there are commonly used generic clearing times for remote clearing that are consistent across the industry, actual clearing times can be shorter or longer depending on conditions and design considerations at an individual TO. The difference of a few cycles can have a significant impact on the transient behavior of generating units, therefore, it is required that the risk analysis use actual clearing times or more conservative values.

Rationale for Requirement R4
Joint ownership of Transmission substations and Transmission stations was discussed in the Guidelines and Technical Basis of previous versions of the CIP-014-3 standard. Because the CIP-014-4 Risk Assessment Refinement SAR calls for clarification regarding Transmission substations and Transmission stations of differing ownership, this section was moved to its own requirement within R4.

Rationale for Requirement R5

Rationale for Requirement R5, Part 5.2
Identification of Primary Control Centers

After completing the risk assessment under Requirement R5 and verified under Requirement R6, it is important to additionally identify the primary control center that operationally controls each Transmission station or Transmission substation, that if rendered inoperable or damaged could result in instability, uncontrolled separation, or Cascading within an Interconnection. A primary control center "operationally controls" a Transmission station or Transmission substation when the control center's electronic actions can cause direct physical actions at the identified Transmission station and Transmission substation, such as opening a breaker.

Requirement R6 through Requirement R10 are Requirement R2 through Requirement R6 in CIP-014-3. The Drafting Team did not make any changes to these Requirements. Therefore, the technical rationales are not provided here.

Rationale for Attachment 1

The purpose of Reliability Standard CIP-014-4 is to protect Transmission stations and Transmission substations, and their associated primary control centers, that if rendered inoperable or damaged as a result of a physical attack, could result in instability, uncontrolled separation, or Cascading within an Interconnection. To properly include those entities that own or operate such Facilities, the Reliability Standard CIP-014-4 primarily applies to Transmission Owners that own Transmission Facilities that meet the specific applicability criteria in Attachment 1. The Facilities described in Attachment 1 mirror those Transmission Facilities that meet bright line criteria for "Medium Impact" Transmission Facilities under Attachment 1 of Reliability Standard CIP-002-5.1a. Each Transmission Owner that owns Transmission Facilities that meet the criteria in Attachment 1 is required to perform a risk assessment to identify its Transmission stations and Transmission substations, and their associated primary control centers, that if rendered inoperable or damaged as a result of a physical attack could result in instability, uncontrolled separation, or Cascading within an Interconnection.

This standard also applies to Transmission Operators. A Transmission Operator's obligations under the standard, however, are only triggered if the Transmission Operator is notified by an applicable Transmission Owner under Requirement R7 that the Transmission Operator operates a primary control center that operationally controls a Transmission station(s) or Transmission substation(s) identified in the Requirement R5 risk assessment. A primary control center operationally controls a Transmission station or Transmission substation when the control center's electronic actions can cause direct physical action at the identified Transmission station or Transmission substation, such as opening a breaker, as opposed to a control center that only has information from the Transmission station or Transmission substation and must coordinate direct action through another entity. Only Transmission Operators who are notified that they have primary control centers under this standard have performance obligations under Requirements R8 through R10. Primary control center, for purposes of this Standard, is the control center that the Transmission Owner or Transmission Operator, respectively, uses as its primary, permanently-manned site to physically operate a Transmission station or Transmission substation that is identified in Requirement R5 and verified in Requirement R6. Control centers that provide back-up capability are not applicable, as they are a form of resiliency and intentionally redundant.

The DT determined that continuing to use criteria for Medium Impact Transmission Facilities in Attachment 1 of CIP-002-5.1a would provide a conservative threshold for defining which Transmission stations and Transmission substations that must be included in the risk assessment in Requirement R5 of CIP-014-4. Additionally, the DT concluded that using CIP002-5.1a Medium Impact criteria was appropriate because it has been approved by stakeholders, NERC, and FERC, and its use provides a technically sound basis to determine which Transmission Owners should conduct the risk assessment. As described in CIP-002-5.1a, the failure of a Transmission station or Transmission substation that meets the Medium Impact criteria could have the capability to result in exceeding one or more Interconnection Reliability Operating Limits (IROLs).

Additionally, the DT determined that it was not necessary to include Generator Operators and Generator Owners in the Reliability Standard. First, Transmission stations or Transmission substations interconnecting generation facilities are considered when determining applicability. Transmission Owners will consider those Transmission stations and Transmission substations that include a Transmission station on the high side of the Generator Step-up transformer (GSU) using Attachment 1, criteria 1 and 2. As an example, a Transmission station or Transmission substation identified as a Transmission Owner facility that interconnects generation will be subject to the Requirement R5 risk assessment if it operates at 500kV or greater or if it is connected at 200 kV – 499kV to three or more other Transmission stations or Transmission substations and has an "aggregate weighted value" exceeding 3000 according to the table in Attachment 1, criteria 2. Second, the Transmission analysis or analyses conducted under Requirement R5 should take into account the impact of the loss of generation connected to applicable Transmission stations or Transmission substations. Additionally, the FERC order does not explicitly mention generation assets and is reasonably understood to focus on the most critical Transmission Facilities. The diagram below shows an example of a station.

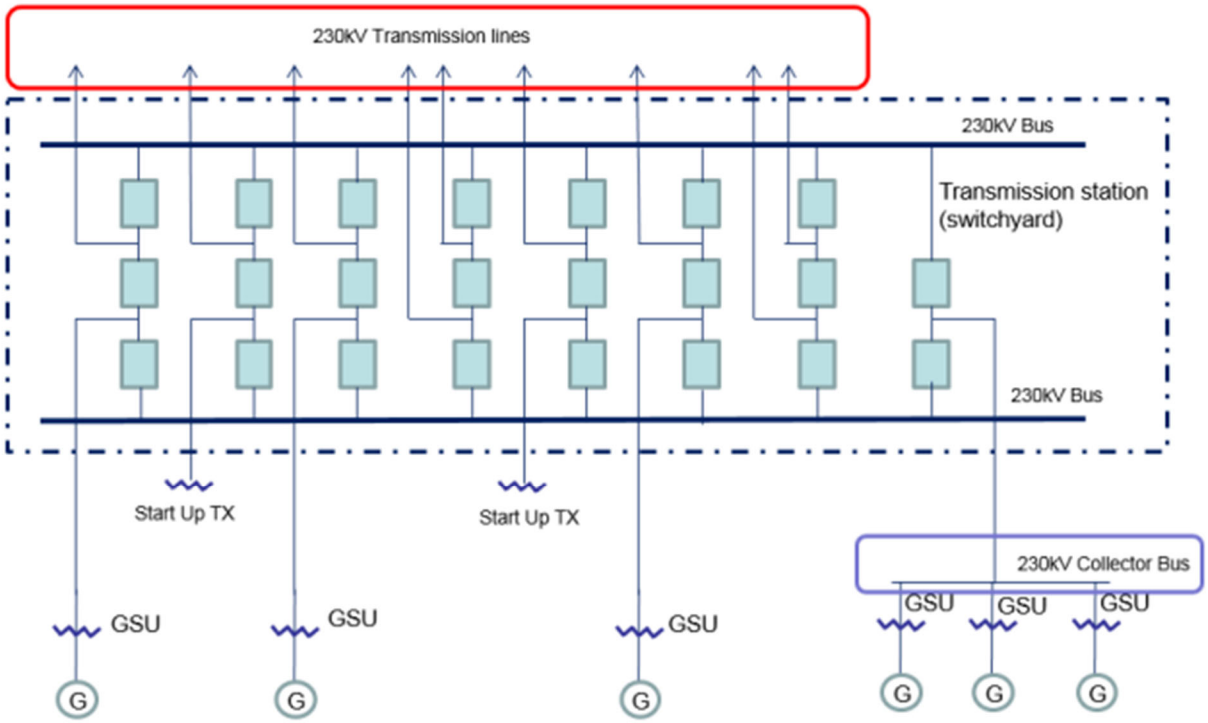

Figure from CIP-014-3 Guidelines and Technical Basis

Also, the DT uses the phrase “Transmission station(s) or Transmission substation(s)” to recognize the existence of both stations and substations. Many entities in industry consider a substation to be a location with physical borders (i.e., fence, wall, etc.) that contains at least an autotransformer. Locations also exist that do not contain autotransformers, and many entities in industry refer to those locations as stations (switching stations or switchyards). Therefore, the DT chose to use both “station” and “substation” to refer to the locations where groups of Transmission Facilities exist.

NERC
NORTH AMERICAN ELECTRIC RELIABILITY CORPORATION

Technical Rationale

Project 2023-06 CIP-014 Risk Assessment Refinement
Reliability Standard CIP-014-4 | ~~May~~ September 2024

CIP-014-4 – Physical Security

In performing the risk assessment, the Transmission Owner should first identify their population of Transmission stations and Transmission substations that meet the criteria contained in Attachment 1. The Standard requires the Transmission Owner to perform a risk assessment, consisting of a transmission analysis, to determine which of those Transmission stations and Transmission Substations, if rendered inoperable or damaged, could result in instability, uncontrolled separation, or Cascading within an Interconnection.

The purpose of Reliability Standard CIP-014 is to protect Transmission stations and Transmission substations, and their associated primary control centers, that if rendered inoperable or damaged as a result of a physical attack could result in instability, uncontrolled separation, or Cascading within an Interconnection. To properly identify candidates for such Transmission station(s) and Transmission substation(s), the Transmission Owner shall evaluate the criteria listed in Attachment 1.

Rationale for Requirement R1

Performing Risk Assessments

Requirement R1 is developed to ensure that each Transmission Owner establishes a list of applicable Transmission station(s) or Transmission substation(s) in accordance with Attachment 1. Aligning the 36 months look ahead in Requirement R1 with the 36 month risk assessment cycle ensures that system topology of the cases used to assess applicability is consistent with the system topology in the risk assessment models. ~~that aligns with the periodicity of the risk assessment outlined in Requirement R5. Aligning the 36 months look ahead in Requirement R1 with the 36 month cycle for conducting risk assessment in accordance with Requirement R5 ensures that system topology of the cases used to assess applicability is consistent with the system topology in the Requirement R5 risk assessment models. . Making the applicability section a separate requirement allows Transmission Owners the option to bypass the remaining requirements in the standard if they do not have any applicable Transmission station(s) or Transmission substation(s).~~

~~**Rationale for Requirement R1 1.1**~~

~~In performing the risk assessment, the Transmission Owner should first identify their population of Transmission stations and Transmission substations that meet the criteria contained in Attachment 1. The Standard requires the Transmission Owner to perform a risk assessment, consisting of a transmission analysis, to determine which of those Transmission stations and Transmission Substations, if rendered inoperable or damaged, could result in instability, uncontrolled separation, or Cascading within an Interconnection.~~

~~The purpose of Reliability Standard CIP-014 is to protect Transmission stations and Transmission substations, and their associated primary control centers, that if rendered inoperable or damaged as a result of a physical attack could result in instability, uncontrolled separation, or Cascading within an Interconnection. To properly identify candidates for such Transmission station(s) and Transmission substation(s), the Transmission Owner shall evaluate the criteria listed in Attachment 1.~~

~~**Rationale for Requirement R1 1.2**~~
~~Transmission Owners shall review and, if necessary, update the list of applicable Transmission station(s) or Transmission substation(s) per Attachment 1 every 36 months. The list of applicable Transmission station(s) or Transmission substation(s) shall include existing or planned to be in service within 36 months Transmission station(s) and Transmission substation(s). The 36-month cycle for updating the list of applicable Transmission station(s) or Transmission substation(s) per Attachment 1 aligns with the annual cycle for performing Planning Assessments per NERC Standard TPL-001. The 36-month risk assessment study cycle aligns with the 36-month planned-to-be-in-service date.~~

~~**Rationale for Requirement R1 1.3**~~
~~Requirements R2 through R9~~4 ~~define requirements that are only relevant when a TO has applicable Transmission substations or Transmission stations. The remaining requirements are therefore, unnecessary if the TO does not have any applicable Transmission substations or Transmission substations.~~

Rationale for Requirement R2
Each Transmission Owner shall, at a minimum, consider ~~, at a minimum,~~ the specifications in Requirement R2~~, parts 2.1.1, 2.1.2, and 2.1.3~~ for general applicability to their systems, and whether specifications and thresholds need to be stipulated for each ~~of these parts~~ Parts 2.1 and 2.2 in their documented criteria.

A certain amount of discretion and flexibility is intended to be allowable for each Transmission Owner in their respective proximity c~~C~~riteria to document, establish, and demonstrate from a technical basis that various aspects of proximity for their Transmission station(s) or Transmission substation(s) either are or are not appropriate to consider in their risk assessments.

~~The DT has determined that protecting the applicable Transmission station(s) or Transmission substation(s) in a proximity group will render a physical attack on that proximity group to be ineffective. The DT has also determined that if the applicable Transmission station(s) or Transmission substation(s) in consideration is added to the Transmission Owner's critical list for physical protection, the risk analysis for that Transmission station or Transmission substation, including any analysis that would be performed based on Requirement R2, can be foregone and considered to be complete.~~

~~The DT has determined that if a proximity group has been identified, that analysis of the proximity groups should be required in each Transmission Owner's documented criteria. This includes proximity groups comprising of Transmission station(s) or Transmission substation(s) that are owned by two or more~~

~~entities. For those scenarios, it is the responsibility of any and all~~all ~~applicable Transmission Owners to ensure that this determination is properly addressed, and appropriate action taken pursuant to analysis.~~

Rationale for Requirement R3

Per Requirement R3, each Transmission Owner is required to have a risk assessment methodology, but the SDT intends for each TO to have flexibility to define its own methodology, including the criteria by which analytical results will be examined to identify Transmission station(s) or Transmission substation(s) that if rendered inoperable or damaged as a result of a physical attack could result in instability, uncontrolled separation, or Cascading within an Interconnection. ~~Per requirement R3, each Transmission Owner is required to have a risk assessment methodology, but the SDT intends for each TO to have flexibility to define its own methodology, including the criteria by which analytical results will be examined to determine if a Transmission station or Transmission substation can be considered critical for the interconnection.~~ The TO is not required to develop its own methodology and is free to use a methodology developed elsewhere, such as in coordination with neighboring TOs or ISOs.

Rationale for Requirement R3, Part 3.1

TOs should have the flexibility to determine the amount of acceptable load loss, acceptable generation loss, or other measurements of system response when determining the impact of an event to the T~~t~~ransmission system. Criteria for measures such as load loss or generation loss should consider the impact to the I~~i~~nterconnection instead of local impacts. ~~For that reason, the loss of load over multiple Transmission stations or Transmission substations should have a higher criticality than losing the same amount of load at a single Transmission substation or Transmission substation.~~

Large loss of generation or ~~large~~ load due to the evaluated disturbance, as well as consequences of isolating faulted equipment, could result in severe System impacts. The documented risk assessment methodology shall include the amount of acceptable load loss, the amount of acceptable generation loss, and post-event response resulting in instability, uncontrolled separation, or Cascading within an Interconnection. Conditions and thresholds ~~for these~~ used for determining critical Transmission station(s) or Transmission substation(s), i.e., those that if rendered inoperable or damaged as a result of a physical attack could result in instability, uncontrolled separation, or Cascading within an Interconnection, should be part of the documented risk assessment methodology.

~~**Rationale for Requirement R3, Part 3.1.1**~~

~~The items listed in Parts 3.1.1.1 through 3.1.1.2 are all~~It is up to the TO to identify~~alit i~~ post-event measures that can be used to assess the criticality of a Transmission substation or Transmission substation. Suggested measures are listed below. ~~While all of these items shall be considered, a~~ A TO can decide that one or more of the items are not applicable to their location within the interconnection and if any additional items should be included~~.~~

These thresholds can be treated as proxies for other conditions such as excessive frequency deviation. ~~Transmission Owners shall develop documented criteria for the conditions listed in Requirement R3, Part 3.1.1, which includes branch thermal exceedance thresholds, bus voltage exceedance thresholds, load loss thresholds, generation loss thresholds, etc.~~

- Steady state voltages
- Transient voltage response
- Thermal loading of Facilities
- Relay loadability
- Rotor angle stability
- Frequency exceeding generator limits
- Frequency stability
- Acceptable damping of oscillations
- Cascading line tripping
- Steady-state voltage stability

Rationale for Requirement R3, Part 3.2

The performance of both steady state and dynamics simulations is required for all applicable Transmission station(s) and substation(s). Dynamic simulations are required by the SAR after NERC and FERC determined that steady-state simulations alone are insufficient for determining ~~whether or not~~whether the loss of a Transmission station or Transmission ~~a~~ substation ~~is critical~~ could result in instability, uncontrolled separation, or Cascading within an Interconnection~~leads to~~. ~~Analyses must be performed at system conditions that demonstrate criticality. Part 3.2.1 states that dynamic simulations are not required when a TO has determined that a Transmission station or Transmission substation is critical via steady-state analysis. Dynamic can still be performed if desired by the TO.~~

Transmission Owners shall develop documented criteria for the conditions listed in Requirement R3, Part 3.1.1, which includes branch thermal exceedance thresholds, bus voltage exceedance thresholds, load loss thresholds, generation loss thresholds, etc.

Rationale for Requirement R3, Part 3.3

The DT believes that simulation of a fault is a reasonable assumption for possible events that could impact a single ~~a single~~ Transmission station~~(s)~~ or Transmission substation~~(s)~~, and for events that could simultaneously impact multiple ~~multiple~~ Transmission station~~(s)~~ or Transmission substation~~(s)~~.
~~Steady-state simulations can account for criteria such as relay loadability and cascading line tripping in ways that are difficult for dynamic simulations. For that reason, steady-state simulations must be performed for any Transmission stations or Transmission substations that were not determined to be critical in the dynamic simulations. Analyses must be performed at system conditions that demonstrate criticality. Part 3.3.1 states that dynamic simulations are not required when a TO has determined that a Transmission station or Transmission substation is critical via steady-state analysis. Dynamic can still be performed if desired by the TO.~~

~~Since physical attacksches can take place during different times and seasons, Requirement R3, Part 3.3, requires the Transmission Owner to perform risk assessments based on steady state studies for System peak, Off-Peak Load, and other System conditions.~~

~~Rationale for Requirement R3, Part 3.4~~
~~The DT believes that a three-phase fault at the highest voltage bus is a reasonable assumption for possible events that could impact a single Transmission station or Transmission substations.~~

~~Rationale for Requirement R3, Part 3.5~~
~~The DT believes that simultaneous single-phase faults are a reasonable assumption for events that could simultaneously impact multiple Transmission stations or Transmission substations.~~

Rationale for Requirement R3, Part 3.~~46~~
The requirement that simulations shall assume the loss of communications and system protection is consistent with the SAR. It is also consistent with the use of "inoperable" in the standard.

Rationale for Requirement R3, Part 3.~~46~~.1
The DT believes that the use of delayed or remote clearing times is consistent with the description of a Transmission station or Transmission substation being rendered inoperable by an event that disabled local protection systems.

Rationale for Requirement R3, Part 3.~~46~~.2
While there are commonly used generic clearing times for remote clearing that are consistent across the industry, actual clearing times can be shorter or longer depending on conditions and design considerations at an individual TO. The difference of a few cycles can have a significant impact on the transient behavior of generating units, therefore, it is required that the risk analysis use actual clearing times or more conservative values~~that are accurate or more conservative as accurate as possible or~~.

Rationale for Requirement R4
~~The SAR directed the DT to address joint ownership as part of the risk assessment. The periodicity of the coordination and risk assessment were aligned.~~

Joint ownership of Transmission substations and Transmission stations was discussed in the Guidelines and Technical Basis of previous versions of the CIP-014-3 standard. Because the CIP-014-4~~3~~ Risk Assessment Refinement SAR calls for clarification regarding Transmission substations and Transmission stations of differing ownership, this section was moved to its own requirement within R4.

Rationale for Requirement R5
~~Per the CIP-014-4 Refinement SAR, the SDT An objective of the CIP-014-43 Risk Assessment Refinement SAR was to align study periods, frequency of studies and the powerflow models used for the studies. A 36-month periodicity was chosen for the R54 risk assessment to reduce the periodicity options from previous versions of the standard. Additionally, a single study periodicity is more easily aligned with~~

~~project in-service date considerations and model choices. As called for in Project Scope item 3 of the CIP-014-3 Risk Assessment Refinement SAR, the risk assessment must comply with the methodology developed in R3, so this language was explicitly added to R5.~~

~~Joint ownership of Transmission substations and Transmission stations was discussed in the Guidelines and Technical Basis of previous versions of the CIP-014 standard. Because the CIP-014-3 Risk Assessment Refinement SAR calls for clarification regarding Transmission substations and Transmission stations of differing ownership, this section was moved to its own requirement within R4~~5~~.~~

~~Transmission Owners shall review and, if necessary, update the list of applicable Transmission station(s) or Transmission substation(s) per Attachment 1 every 36 months. The list of applicable Transmission station(s) or Transmission substation(s) shall include existing or planned to be in service within 36 months Transmission station(s) and Transmission substation(s). The 36-month cycle for updating the list of applicable Transmission station(s) or Transmission substation(s) per Attachment 1 aligns with the annual cycle for performing Planning Assessments per NERC Standard TPL-001-5. The 36-month risk assessment study cycle aligns with the 36-month planned-to-be-in-service date.~~

Rationale for Requirement R5, Part 5.2

Identification of Primary Control Centers

~~Previous R1.3~~

After completing the risk assessment under Requirement R5~~4~~ and verified under Requirement R6~~5~~, it is important to additionally identify the primary control center that operationally controls each Transmission station or Transmission substation, that if rendered inoperable or damaged could result in instability, uncontrolled separation, or Cascading within an Interconnection. A primary control center "operationally controls" a Transmission station or Transmission substation when the control center's electronic actions can cause direct physical actions at the identified Transmission station and Transmission substation, such as opening a breaker.

Requirement R6 through Requirement R10 are Requirement R2 through Requirement R6 in CIP-014-3. The Drafting Team did not make any changes to these Requirements. Therefore, the technical rationales are not provided here.

Rationale for Attachment 1

The purpose of Reliability Standard CIP-014-4 is to protect Transmission stations and Transmission substations, and their associated primary control centers, that if rendered inoperable or damaged as a result of a physical attack, could result in instability, uncontrolled separation, or Cascading within an Interconnection. To properly include those entities that own or operate such Facilities, the Reliability Standard CIP-014-4 primarily applies to Transmission Owners that own Transmission Facilities that meet the specific applicability criteria in Attachment 1. The Facilities described in Attachment 1 mirror those Transmission Facilities that meet bright line criteria for "Medium Impact" Transmission Facilities under Attachment 1 of Reliability Standard CIP-002-5.1a. Each Transmission Owner that owns Transmission Facilities that meet the criteria in Attachment 1 is required to perform a risk assessment to identify its Transmission stations and Transmission substations, and their associated primary control centers, that if

rendered inoperable or damaged as a result of a physical attack could result in instability, uncontrolled separation, or Cascading within an Interconnection.

This standard also applies to Transmission Operators. A Transmission Operator's obligations under the standard, however, are only triggered if the Transmission Operator is notified by an applicable Transmission Owner under Requirement R7~~6~~ that the Transmission Operator operates a primary control center that operationally controls a Transmission station(s) or Transmission substation(s) identified in the Requirement R5~~4~~ risk assessment. A primary control center operationally controls a Transmission station or Transmission substation when the control center's electronic actions can cause direct physical action at the identified Transmission station or Transmission substation, such as opening a breaker, as opposed to a control center that only has information from the Transmission station or Transmission substation and must coordinate direct action through another entity. Only Transmission Operators who are notified that they have primary control centers under this standard have performance obligations under Requirements R8~~7~~ through R10~~9~~. Primary control center, for purposes of this Standard, is the control center that the Transmission Owner or Transmission Operator, respectively, uses as its primary, permanently-manned site to physically operate a Transmission station or Transmission substation that is identified in Requirement R5~~4~~ and verified in Requirement R6~~5~~. Control centers that provide back-up capability are not applicable, as they are a form of resiliency and intentionally redundant.

The DT determined that continuing to use criteria for Medium Impact Transmission Facilities in Attachment 1 of CIP-002-5.1a would provide a conservative threshold for defining which Transmission stations and Transmission substations that must be included in the risk assessment in Requirement R5~~R4~~ of CIP-014-4. Additionally, the DT concluded that using CIP002-5.1a Medium Impact criteria was appropriate because it has been approved by stakeholders, NERC, and FERC, and its use provides a technically sound basis to determine which Transmission Owners should conduct the risk assessment. As described in CIP-002-5.1a, the failure of a Transmission station or Transmission substation that meets the Medium Impact criteria could have the capability to result in exceeding one or more Interconnection Reliability Operating Limits (IROLs).

Additionally, the DT determined that it was not necessary to include Generator Operators and Generator Owners in the Reliability Standard. First, Transmission stations or Transmission substations interconnecting generation facilities are considered when determining applicability. Transmission Owners will consider those Transmission stations and Transmission substations that include a Transmission station on the high side of the Generator Step-up transformer (GSU) using ~~Applicability Section 4.1.1.~~Attachment 1, criteria~~section~~ 1 and 2~~ and 4.1.1.2~~. As an example, a Transmission station or Transmission substation identified as a Transmission Owner facility that interconnects generation will be subject to the Requirement R5~~1~~ risk assessment if it operates at 500kV or greater or if it is connected at 200 kV – 499kV to three or more other Transmission stations or Transmission substations and has an "aggregate weighted value" exceeding 3000 according to the table in ~~Applicability Section 4.1.1.~~Attachment 1, criteria~~section~~ 2. Second, the Transmission analysis or analyses conducted under Requirement R5~~1~~ should take into account the impact of the loss of generation connected to applicable Transmission stations or Transmission substations. Additionally, the FERC order does not explicitly mention generation assets and

is reasonably understood to focus on the most critical Transmission Facilities. The diagram below shows an example of a station.

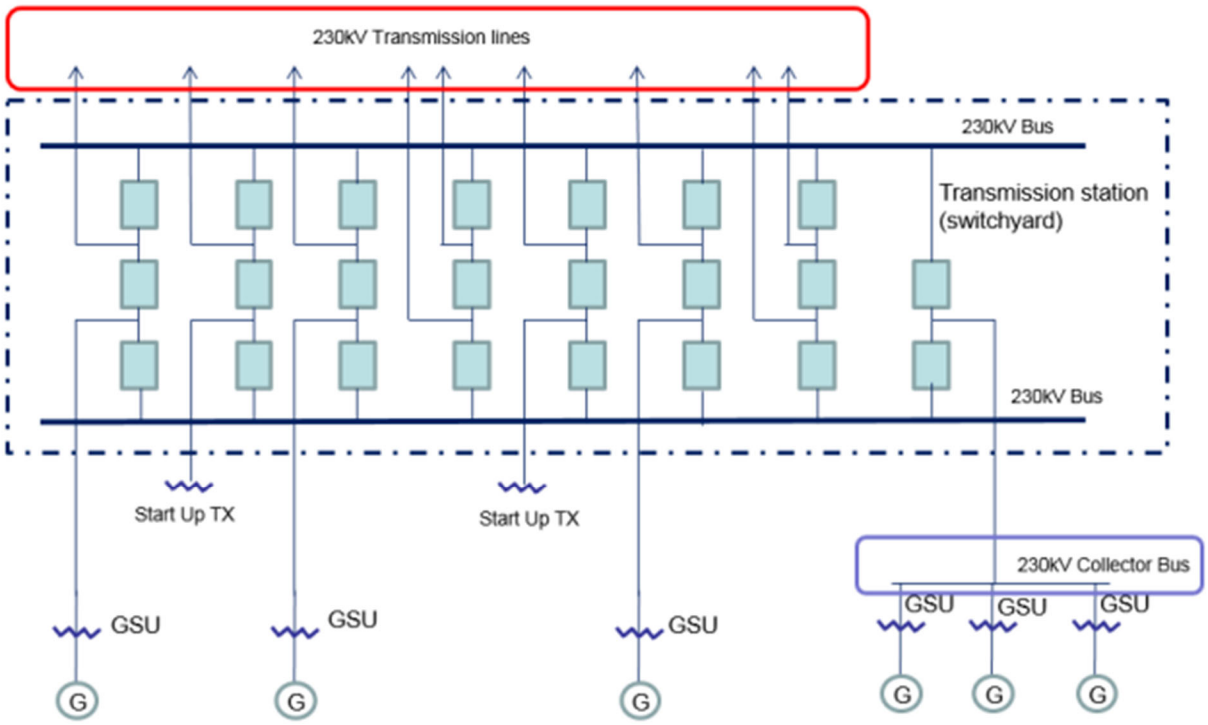

Figure from CIP-014-3 Guidelines and Technical Basis

Also, the DT uses the phrase “Transmission station(s) or Transmission substation(s)” to recognize the existence of both stations and substations. Many entities in industry consider a substation to be a location with physical borders (i.e., fence, wall, etc.) that contains at least an autotransformer. Locations also exist that do not contain autotransformers, and many entities in industry refer to those locations as stations (switching stations or switchyards). Therefore, the DT chose to use both “station” and “substation” to refer to the locations where groups of Transmission Facilities exist.

NERC
NORTH AMERICAN ELECTRIC RELIABILITY CORPORATION

Reminder
Standards Announcement
Project 2023-06 CIP-014 Risk Assessment Refinement

Be aware that this is a public proceeding, and comments are publicly available upon submission. DO NOT include any CEII or otherwise sensitive information in your comments.

Additional Ballots and Non-binding Poll Open through November 6, 2024

Now Available

Additional ballots for **Project 2023-06 CIP-014 Risk Assessment Refinement** and non-binding poll of the associated Violation Risk Factors and Violation Severity Levels are open through **8 p.m. Eastern, Wednesday, November 6, 2024** for the following standard and implementation plan:

- CIP-014-4 – Physical Security
- Implementation Plan

The standard drafting team's considerations of the responses received from the last comment period are reflected in this draft of the standard.

Reminder Regarding Corporate RBB Memberships
Under the NERC Rules of Procedure, each entity and its affiliates is collectively permitted one voting membership per Registered Ballot Body Segment. Each entity that undergoes a change in corporate structure (such as a merger or acquisition) that results in the entity or affiliated entities having more than the one permitted representative in a particular Segment must withdraw the duplicate membership(s) prior to joining new ballot pools or voting on anything as part of an existing ballot pool. Contact ballotadmin@nerc.net to assist with the removal of any duplicate registrations.

Balloting
Members of the ballot pools associated with this project can log in and submit their votes by accessing the Standards Balloting and Commenting System (SBS) here.

Note: Votes cast in previous ballots, will not carry over to additional ballots. It is the responsibility of the registered voter in the ballot pools to place votes again. To ensure a quorum is reached, if you do not want to vote affirmative or negative, cast an abstention.

- *Contact NERC IT support directly at https://support.nerc.net/ (Monday – Friday, 8 a.m. - 5 p.m. Eastern) for problems regarding accessing the SBS due to a forgotten password, incorrect credential error messages, or system lock-out.*
- *Passwords expire every **6 months** and must be reset.*

- *The SBS **is not** supported for use on mobile devices.*
- *Please be mindful of ballot and comment period closing dates. We ask to **allow at least 48 hours** for NERC support staff to assist with inquiries. Therefore, it is recommended that users try logging into their SBS accounts **prior to the last day** of a comment/ballot period.*

Next Steps

The ballot results will be announced and posted on the project page. The drafting team will review all responses received during the comment period and determine the next steps of the project.

For information on the Standards Development Process, refer to the Standard Processes Manual.

For more information or assistance, contact Senior Standards Developer, Ben Wu (via email) or at 470-542-6882. Subscribe to this project's observer mailing list by selecting "NERC Email Distribution Lists" from the "Service" drop-down menu and specify “Project 2023-06 CIP-014 Risk Assessment Refinement observer list” in the Description Box.

North American Electric Reliability Corporation
3353 Peachtree Rd, NE
Suite 600, North Tower
Atlanta, GA 30326
404-446-2560 | www.nerc.com

NERC
NORTH AMERICAN ELECTRIC RELIABILITY CORPORATION

Standards Announcement

Project 2023-06 CIP-014 Risk Assessment Refinement

Be aware that this is a public proceeding, and comments are publicly available upon submission. DO NOT include any CEII or otherwise sensitive information in your comments.

Formal Comment Period Open through November 6, 2024

Now Available

A 45-day formal comment period for **Project 2023-06 CIP-014 Risk Assessment Refinement** is open through **8 p.m. Eastern, Wednesday, November 6, 2024** for the following standard and implementation plan:

- CIP-014-4 – Physical Security
- Implementation Plan

The standard drafting team's considerations of the responses received from the previous comment period are reflected in this draft of the standard.

Reminder Regarding Corporate RBB Memberships

Under the NERC Rules of Procedure, each entity and its affiliates is collectively permitted one voting membership per Registered Ballot Body Segment. Each entity that undergoes a change in corporate structure (such as a merger or acquisition) that results in the entity or affiliated entities having more than the one permitted representative in a particular Segment must withdraw the duplicate membership(s) prior to joining new ballot pools or voting on anything as part of an existing ballot pool. Contact ballotadmin@nerc.net to assist with the removal of any duplicate registrations.

Commenting

Use the Standards Balloting and Commenting System (SBS) to submit comments. An unofficial Word version of the comment form is posted on the project page.

- *Contact NERC IT support directly at https://support.nerc.net/ (Monday – Friday, 8 a.m. - 5 p.m. Eastern) for problems regarding accessing the SBS due to a forgotten password, incorrect credential error messages, or system lock-out.*
- *Passwords expire every **6 months** and must be reset.*
- *The SBS **is not** supported for use on mobile devices.*
- *Please be mindful of ballot and comment period closing dates. We ask to **allow at least 48 hours** for NERC support staff to assist with inquiries. Therefore, it is recommended that users try logging into their SBS accounts **prior to the last day** of a comment/ballot period.*

Next Steps

Additional ballots for the standard and implementation plan, as well as the non-binding poll of the associated Violation Risk Factors and Violation Severity Levels will be conducted **October 28 – November 6, 2024**.

For information on the Standards Development Process, refer to the Standard Processes Manual.

For more information or assistance, contact Senior Standards Developer**,** Ben Wu (via email) or at 470-542-6882. Subscribe to this project's observer mailing list by selecting "NERC Email Distribution Lists" from the "Service" drop-down menu and specify “Project 2023-06 CIP-014 Risk Assessment Refinement observer list” in the Description Box.



North American Electric Reliability Corporation
3353 Peachtree Rd, NE
Suite 600, North Tower
Atlanta, GA 30326
404-446-2560 | www.nerc.com

BALLOT RESULTS

Comment: View Comment Results (/CommentResults/Index/352)
Ballot Name: Project 2023-06 CIP-014 Risk Assessment Refinement CIP-014-4 AB 2 ST
Voting Start Date: 10/28/2024 12:01:00 AM
Voting End Date: 11/6/2024 8:00:00 PM
Ballot Type: ST
Ballot Activity: AB
Ballot Series: 2
Total # Votes: 263
Total Ballot Pool: 295
Quorum: 89.15
Quorum Established Date: 11/6/2024 3:37:22 PM
Weighted Segment Value: 47.34

Segment	Ballot Pool	Segment Weight	Affirmative Votes	Affirmative Fraction	Negative Votes w/ Comment	Negative Fraction w/ Comment	Negative Votes w/o Comment	Abstain	No Vote
Segment: 1	86	1	33	0.478	36	0.522	0	11	6
Segment: 2	7	0.1	0	0	1	0.1	0	5	1
Segment: 3	68	1	26	0.481	28	0.519	0	6	8
Segment: 4	15	0.8	5	0.5	3	0.3	0	5	2
Segment: 5	66	1	21	0.438	27	0.563	0	10	8
Segment: 6	46	1	14	0.412	20	0.588	0	5	7
Segment: 7	0	0	0	0	0	0	0	0	0
Segment: 8	0	0	0	0	0	0	0	0	0

© 2026 - NERC Ver 4.2.1.0 Machine Name: ATLVPEROWEB01

Segment	Ballot Pool	Segment Weight	Affirmative Votes	Affirmative Fraction	Negative Votes w/ Comment	Negative Fraction w/ Comment	Negative Votes w/o Comment	Abstain	No Vote
Segment: 9	0	0	0	0	0	0	0	0	0
Segment: 10	7	0.4	2	0.2	2	0.2	0	3	0
Totals:	295	5.3	101	2.509	117	2.791	0	45	32

BALLOT POOL MEMBERS

Show All entries Search: Search

Segment	Organization	Voter	Designated Proxy	Ballot	NERC Memo
1	AEP - AEP Service Corporation	Dennis Sauriol		Negative	Comments Submitted
1	Allete - Minnesota Power, Inc.	Hillary Creurer		None	N/A
1	Ameren - Ameren Services	Tamara Evey		Affirmative	N/A
1	American Transmission Company, LLC	Amy Wilke		Negative	Comments Submitted
1	APS - Arizona Public Service Co.	Daniela Atanasovski		Negative	Comments Submitted
1	Arkansas Electric Cooperative Corporation	Emily Corley		None	N/A
1	Associated Electric Cooperative, Inc.	Mark Riley		Affirmative	N/A
1	Austin Energy	Thomas Standiful		Affirmative	N/A

© 2026 - NERC Ver 4.2.1.0 Machine Name: ATLVPEROWEB01

Segment	Organization	Voter	Designated Proxy	Ballot	NERC Memo
1	Balancing Authority of Northern California	Kevin Smith	Tim Kelley	Affirmative	N/A
1	BC Hydro and Power Authority	Adrian Andreoiu		Abstain	N/A
1	Berkshire Hathaway Energy - MidAmerican Energy Co.	Terry Harbour		Affirmative	N/A
1	Black Hills Corporation	Travis Grablander		Affirmative	N/A
1	Bonneville Power Administration	Kamala Rogers-Holliday		Negative	Comments Submitted
1	CenterPoint Energy Houston Electric, LLC	Daniela Hammons		Negative	Comments Submitted
1	Central Iowa Power Cooperative	Kevin Lyons		Affirmative	N/A
1	City Utilities of Springfield, Missouri	Michael Buyce		Negative	Third-Party Comments
1	Colorado Springs Utilities	Corey Walker		Affirmative	N/A
1	Con Ed - Consolidated Edison Co. of New York	Dermot Smyth		Negative	Third-Party Comments
1	Dairyland Power Cooperative	Karrie Schuldt		None	N/A
1	Dominion - Dominion Virginia Power	Steven Belle		Negative	Comments Submitted
1	Duke Energy	Katherine Street	Ellese Murphy	Negative	Comments Submitted
1	Edison International - Southern California Edison Company	Robert Blackney		Negative	Comments Submitted
1	Entergy	Brian Lindsey		Negative	Comments Submitted
1	Evergy	Kevin Frick	Alan Kloster	Negative	Comments Submitted

© 2026 - NERC Ver 4.2.1.0 Machine Name: ATLVPEROWEB01

Segment	Organization	Voter	Designated Proxy	Ballot	NERC Memo
1	Eversource Energy	Joshua London		Negative	Comments Submitted
1	Exelon	Daniel Gacek		Affirmative	N/A
1	FirstEnergy - FirstEnergy Corporation	John Martinez		Affirmative	N/A
1	Georgia Transmission Corporation	Greg Davis	Stephen Stafford	Negative	Comments Submitted
1	Glencoe Light and Power Commission	Terry Volkmann		Negative	Third-Party Comments
1	Great River Energy	Gordon Pietsch		Affirmative	N/A
1	Hydro One Networks, Inc.	Emma Halilovic	Lidija Efremova	Negative	Comments Submitted
1	Hydro-Quebec (HQ)	Nicolas Turcotte	Chantal Mazza	Negative	Comments Submitted
1	IDACORP - Idaho Power Company	Sean Steffensen		Affirmative	N/A
1	Imperial Irrigation District	Jesus Sammy Alcaraz	Denise Sanchez	Affirmative	N/A
1	International Transmission Company Holdings Corporation	Michael Moltane	Gail Elliott	Negative	Comments Submitted
1	Lakeland Electric	Larry Watt		Affirmative	N/A
1	Lincoln Electric System	Josh Johnson		Abstain	N/A
1	Long Island Power Authority	Isidoro Behar		Abstain	N/A
1	Los Angeles Department of Water and Power	faranak sarbaz		Abstain	N/A
1	Lower Colorado River Authority	Matt Lewis	James Baldwin	Affirmative	N/A
1	M and A Electric Power Cooperative	William Price		Affirmative	N/A
1	Manitoba Hydro	Nazra Gladu		Affirmative	N/A

© 2026 - NERC Ver 4.2.1.0 Machine Name: ATLVPEROWEB01

Segment	Organization	Voter	Designated Proxy	Ballot	NERC Memo
1	Minnkota Power Cooperative Inc.	Theresa Allard	Nikki Carson-Marquis	Negative	Comments Submitted
1	Muscatine Power and Water	Andrew Kurriger		Abstain	N/A
1	N.W. Electric Power Cooperative, Inc.	Mark Ramsey		Affirmative	N/A
1	National Grid USA	Michael Jones		Negative	Third-Party Comments
1	NB Power Corporation	Jeffrey Streifling		Negative	Comments Submitted
1	Nebraska Public Power District	Jamison Cawley		Negative	Comments Submitted
1	Network and Security Technologies	Nick Lauriat	Roger Fradenburgh	Abstain	N/A
1	New York Power Authority	Daniel Valle		Negative	Third-Party Comments
1	NextEra Energy - Florida Power and Light Co.	Silvia Mitchell		Negative	Comments Submitted
1	NiSource - Northern Indiana Public Service Co.	Alison Nickells		Negative	Comments Submitted
1	Northeast Missouri Electric Power Cooperative	Brett Douglas		Affirmative	N/A
1	OGE Energy - Oklahoma Gas and Electric Co.	Terri Pyle		Affirmative	N/A
1	Oncor Electric Delivery	Byron Booker	Lucinda Bradshaw	Abstain	N/A
1	OTP - Otter Tail Power Company	Charles Wicklund		Affirmative	N/A
1	Pacific Gas and Electric Company	Marco Rios	Bob Cardle	Negative	Comments Submitted
1	Pedernales Electric Cooperative, Inc.	Bradley Collard		None	N/A

© 2026 - NERC Ver 4.2.1.0 Machine Name: ATLVPEROWEB01

Segment	Organization	Voter	Designated Proxy	Ballot	NERC Memo
1	Platte River Power Authority	Marissa Archie		Affirmative	N/A
1	PNM Resources - Public Service Company of New Mexico	Lynn Goldstein		Negative	Comments Submitted
1	Portland General Electric Co.	Brooke Jockin		Negative	Comments Submitted
1	PPL Electric Utilities Corporation	Michelle McCartney Longo		Negative	Comments Submitted
1	PSEG - Public Service Electric and Gas Co.	Karen Arnold		None	N/A
1	Public Utility District No. 1 of Chelan County	Diane E Landry		Negative	Comments Submitted
1	Public Utility District No. 1 of Snohomish County	Alyssia Rhoads		Affirmative	N/A
1	Public Utility District No. 2 of Grant County, Washington	Joanne Anderson		Abstain	N/A
1	Sacramento Municipal Utility District	Wei Shao	Tim Kelley	Affirmative	N/A
1	Salt River Project	Laura Somak		Negative	Comments Submitted
1	Santee Cooper	Chris Wagner		Affirmative	N/A
1	SaskPower	Wayne Guttormson		Abstain	N/A
1	Seattle City Light	Michael Jang		Affirmative	N/A
1	Seminole Electric Cooperative, Inc.	Kristine Ward		None	N/A
1	Sempra - San Diego Gas and Electric	Mo Derbas		Negative	Third-Party Comments
1	Sho-Me Power Electric Cooperative	Olivia Olson		Affirmative	N/A

© 2026 - NERC Ver 4.2.1.0 Machine Name: ATLVPEROWEB01

Segment	Organization	Voter	Designated Proxy	Ballot	NERC Memo
1	Southern Company - Southern Company Services, Inc.	Matt Carden		Negative	Comments Submitted
1	Southwestern Power Administration	Angela Wheat		Abstain	N/A
1	Sunflower Electric Power Corporation	Paul Mehlhaff		Affirmative	N/A
1	Tacoma Public Utilities (Tacoma, WA)	John Merrell	Jennie Wike	Affirmative	N/A
1	Tallahassee Electric (City of Tallahassee, FL)	Scott Langston		Negative	Comments Submitted
1	Tennessee Valley Authority	David Plumb		Affirmative	N/A
1	Tri-State G and T Association, Inc.	Donna Wood		Affirmative	N/A
1	U.S. Bureau of Reclamation	Richard Jackson		Affirmative	N/A
1	Unisource - Tucson Electric Power Co.	Jessica Cordero		Negative	Comments Submitted
1	VELCO -Vermont Electric Power Company, Inc.	Randall Buswell		Abstain	N/A
1	Western Area Power Administration	Ben Hammer		Affirmative	N/A
1	Xcel Energy, Inc.	Eric Barry		Negative	Third-Party Comments
2	California ISO	Darcy O'Connell		Abstain	N/A
2	Electric Reliability Council of Texas, Inc.	Kennedy Meier		Abstain	N/A
2	ISO New England, Inc.	John Pearson		Negative	Comments Submitted
2	Midcontinent ISO, Inc.	Kirsten Rowley		Abstain	N/A
2	New York Independent System Operator	Gregory Campoli		None	N/A

© 2026 - NERC Ver 4.2.1.0 Machine Name: ATLVPEROWEB01

Segment	Organization	Voter	Designated Proxy	Ballot	NERC Memo
2	PJM Interconnection, L.L.C.	Thomas Foster	Elizabeth Davis	Abstain	N/A
2	Southwest Power Pool, Inc. (RTO)	Joshua Phillips		Abstain	N/A
3	AEP	Leshel Hutchings		Negative	Comments Submitted
3	Ameren - Ameren Services	David Jendras Sr	Nick Leathers	Affirmative	N/A
3	APS - Arizona Public Service Co.	Jessica Lopez		Negative	Comments Submitted
3	Arkansas Electric Cooperative Corporation	Ayslynn Mcavoy		None	N/A
3	Associated Electric Cooperative, Inc.	Todd Bennett		Affirmative	N/A
3	Austin Energy	Lovita Griffin		Affirmative	N/A
3	Avista - Avista Corporation	Robert Follini		Affirmative	N/A
3	BC Hydro and Power Authority	Ming Jiang		Abstain	N/A
3	Berkshire Hathaway Energy - MidAmerican Energy Co.	Joseph Amato		Affirmative	N/A
3	Black Hills Corporation	Josh Combs	Carly Miller	Affirmative	N/A
3	Bonneville Power Administration	Ron Sporseen		Negative	Comments Submitted
3	Buckeye Power, Inc.	Tom Schmidt	Ryan Strom	Abstain	N/A
3	Central Electric Power Cooperative (Missouri)	Adam Weber		Affirmative	N/A
3	City Utilities of Springfield, Missouri	Jessica Morrissey		Negative	Third-Party Comments
3	Colorado Springs Utilities	Hillary Dobson		Affirmative	N/A
3	Con Ed - Consolidated Edison Co. of New York	Lincoln Burton		Negative	Third-Party Comments

© 2026 - NERC Ver 4.2.1.0 Machine Name: ATLVPEROWEB01

Segment	Organization	Voter	Designated Proxy	Ballot	NERC Memo
3	Dominion - Dominion Virginia Power	Victoria Crider		Negative	Comments Submitted
3	Duke Energy - Florida Power Corporation	Marcelo Pesantez		Negative	Third-Party Comments
3	Edison International - Southern California Edison Company	Romel Aquino		Negative	Comments Submitted
3	Entergy	James Keele		Negative	Comments Submitted
3	Evergy	Marcus Moor	Alan Kloster	Negative	Comments Submitted
3	Eversource Energy	Vicki O'Leary		Negative	Comments Submitted
3	Exelon	Kinte Whitehead		Affirmative	N/A
3	FirstEnergy - FirstEnergy Corporation	Aaron Ghodooshim		Affirmative	N/A
3	Georgia System Operations Corporation	Scott McGough		None	N/A
3	Great River Energy	Michael Brytowski		Affirmative	N/A
3	Imperial Irrigation District	George Kirschner	Denise Sanchez	Affirmative	N/A
3	KAMO Electric Cooperative	Tony Gott		Affirmative	N/A
3	Lincoln Electric System	Sam Christensen		Abstain	N/A
3	Los Angeles Department of Water and Power	Fausto Serratos		Abstain	N/A
3	M and A Electric Power Cooperative	Gary Dollins		Affirmative	N/A
3	MEAG Power	Roger Brand	Rebika Yitna	Negative	Comments Submitted
3	MGE Energy - Madison Gas and Electric Co.	Benjamin Widder		Abstain	N/A
3	Muscatine Power and Water	Seth Shoemaker		Abstain	N/A

© 2026 - NERC Ver 4.2.1.0 Machine Name: ATLVPEROWEB01

Segment	Organization	Voter	Designated Proxy	Ballot	NERC Memo
3	National Grid USA	Brian Shanahan		Negative	Third-Party Comments
3	Nebraska Public Power District	Tony Eddleman		Negative	Comments Submitted
3	New York Power Authority	Richard Machado		Negative	Third-Party Comments
3	NextEra Energy - Florida Power and Light Co.	Karen Demos		Negative	Comments Submitted
3	NiSource - Northern Indiana Public Service Co.	Steven Taddeucci		Negative	Comments Submitted
3	Northeast Missouri Electric Power Cooperative	Skyler Wiegmann		Affirmative	N/A
3	Northern California Power Agency	Michael Whitney	Chris Carnesi	None	N/A
3	NW Electric Power Cooperative, Inc.	Heath Henry		Affirmative	N/A
3	OGE Energy - Oklahoma Gas and Electric Co.	Donald Hargrove		Affirmative	N/A
3	Omaha Public Power District	David Heins		Negative	Third-Party Comments
3	Orlando Utilities Commission	Ballard Mutters		None	N/A
3	OTP - Otter Tail Power Company	Wendi Olson		Affirmative	N/A
3	Pacific Gas and Electric Company	Sandra Ellis	Bob Cardle	Negative	Comments Submitted
3	Platte River Power Authority	Richard Kiess		Affirmative	N/A
3	PNM Resources - Public Service Company of New Mexico	Amy Wesselkamper		Negative	Comments Submitted
3	Portland General Electric Co.	Mayra Franco		Negative	Comments Submitted

© 2026 - NERC Ver 4.2.1.0 Machine Name: ATLVPEROWEB01

Segment	Organization	Voter	Designated Proxy	Ballot	NERC Memo
3	PPL - Louisville Gas and Electric Co.	James Frank		Negative	Comments Submitted
3	PSEG - Public Service Electric and Gas Co.	Christopher Murphy		None	N/A
3	Public Utility District No. 1 of Chelan County	Joyce Gundry		Negative	Comments Submitted
3	Puget Sound Energy, Inc.	Kelley Sargent		Negative	Comments Submitted
3	Sacramento Municipal Utility District	Nicole Looney	Tim Kelley	Affirmative	N/A
3	Salt River Project	Mathew Weber		Negative	Comments Submitted
3	Santee Cooper	Vicky Budreau		Affirmative	N/A
3	Seattle City Light	Zenon O'young-Chu		Affirmative	N/A
3	Seminole Electric Cooperative, Inc.	Usama Tahir		None	N/A
3	Sempra - San Diego Gas and Electric	Bryan Bennett		Negative	Third-Party Comments
3	Sho-Me Power Electric Cooperative	Jarrod Murdaugh		Affirmative	N/A
3	Snohomish County PUD No. 1	Holly Chaney		Affirmative	N/A
3	Southern Company - Alabama Power Company	Joel Dembowski		Negative	Comments Submitted
3	Southern Indiana Gas and Electric Co.	Ryan Snyder		Negative	Comments Submitted
3	Tennessee Valley Authority	Ian Grant		Affirmative	N/A
3	Tri-State G and T Association, Inc.	Ryan Walter		Affirmative	N/A
3	TXNM Energy	Scott Thompson		None	N/A
3	Xcel Energy, Inc.	Nicholas Friebel		None	N/A

© 2026 - NERC Ver 4.2.1.0 Machine Name: ATLVPEROWEB01

Segment	Organization	Voter	Designated Proxy	Ballot	NERC Memo
4	Alliant Energy Corporation Services, Inc.	Larry Heckert		Negative	Third-Party Comments
4	Arkansas Electric Cooperative Corporation	Jenni Sudduth		Abstain	N/A
4	Buckeye Power, Inc.	Jason Procuniar	Ryan Strom	Abstain	N/A
4	City Utilities of Springfield, Missouri	Jerry Bradshaw		Negative	Third-Party Comments
4	FirstEnergy - FirstEnergy Corporation	Mark Garza		Affirmative	N/A
4	Georgia System Operations Corporation	Katrina Lyons		Negative	Third-Party Comments
4	Northern California Power Agency	Marty Hostler		None	N/A
4	Oklahoma Municipal Power Authority	Michael Watt		Abstain	N/A
4	Public Utility District No. 1 of Snohomish County	John D. Martinsen		Affirmative	N/A
4	Public Utility District No. 2 of Grant County, Washington	Karla Weaver		Abstain	N/A
4	Sacramento Municipal Utility District	Foung Mua	Tim Kelley	Affirmative	N/A
4	Seattle City Light	Robert Jones		Affirmative	N/A
4	Utility Services, Inc.	Carver Powers		Affirmative	N/A
4	WEC Energy Group, Inc.	Candace Morakinyo		None	N/A
4	Western Power Pool	Kevin Conway		Abstain	N/A
5	AEP	Thomas Foltz		Negative	Comments Submitted
5	Ameren - Ameren Missouri	Sam Dwyer		Affirmative	N/A
5	APS - Arizona Public Service Co.	Andrew Smith		Negative	Comments Submitted

© 2026 - NERC Ver 4.2.1.0 Machine Name: ATLVPEROWEB01

Segment	Organization	Voter	Designated Proxy	Ballot	NERC Memo
5	Associated Electric Cooperative, Inc.	Chuck Booth		Affirmative	N/A
5	Austin Energy	Michael Dillard		Affirmative	N/A
5	Avista - Avista Corporation	Glen Farmer		Affirmative	N/A
5	BC Hydro and Power Authority	Quincy Wang		Abstain	N/A
5	Berkshire Hathaway - NV Energy	Dwanique Spiller		Affirmative	N/A
5	Black Hills Corporation	Sheila Suurmeier	Carly Miller	Affirmative	N/A
5	Buckeye Power, Inc.	Kevin Zemanek	Ryan Strom	Abstain	N/A
5	California Department of Water Resources	ASM Mostafa		None	N/A
5	CMS Energy - Consumers Energy Company	David Greyerbiehl		None	N/A
5	Colorado Springs Utilities	Jeffrey Icke		Affirmative	N/A
5	Con Ed - Consolidated Edison Co. of New York	Michelle Pagano		Negative	Third-Party Comments
5	Constellation	Alison MacKellar		Abstain	N/A
5	Cowlitz County PUD	Deanna Carlson		Abstain	N/A
5	Dairyland Power Cooperative	Tommy Drea		Negative	Third-Party Comments
5	Dominion - Dominion Resources, Inc.	Barbara Marion		Negative	Comments Submitted
5	DTE Energy - Detroit Edison Company	Mohamad Elhusseini		Abstain	N/A
5	Duke Energy	Dale Goodwine		Negative	Third-Party Comments
5	Edison International - Southern California Edison Company	Selene Willis		Negative	Comments Submitted
5	Electric Power Supply Association	Bill Zuretti		None	N/A

© 2026 - NERC Ver 4.2.1.0 Machine Name: ATLVPEROWEB01

Segment	Organization	Voter	Designated Proxy	Ballot	NERC Memo
5	Entergy - Entergy Services, Inc.	Gail Golden		Negative	Comments Submitted
5	Evergy	Jeremy Harris	Alan Kloster	Negative	Comments Submitted
5	FirstEnergy - FirstEnergy Corporation	Matthew Augustin		Affirmative	N/A
5	Great River Energy	Jacalynn Bentz		Affirmative	N/A
5	Greybeard Compliance Services, LLC	Mike Gabriel		Abstain	N/A
5	Hydro-Quebec (HQ)	Junji Yamaguchi	Chantal Mazza	Negative	Comments Submitted
5	Imperial Irrigation District	Tino Zaragoza	Denise Sanchez	Affirmative	N/A
5	JEA	John Babik		None	N/A
5	Lincoln Electric System	Brittany Millard		Abstain	N/A
5	Los Angeles Department of Water and Power	Robert Kerrigan		Abstain	N/A
5	Lower Colorado River Authority	Teresa Krabe		Affirmative	N/A
5	National Grid USA	Robin Berry		Negative	Third-Party Comments
5	NB Power Corporation - New Brunswick Power Transmission Corporation	Erin Wilson		Negative	Comments Submitted
5	Nebraska Public Power District	Ronald Bender		Negative	Comments Submitted
5	New York Power Authority	Zahid Qayyum		Negative	Third-Party Comments
5	NextEra Energy	Richard Vendetti		Negative	Comments Submitted
5	NiSource - Northern Indiana Public Service Co.	Kathryn Tackett		Negative	Comments Submitted
5	Northern California Power Agency	Jeremy Lawson	Chris Carnesi	None	N/A

© 2026 - NERC Ver 4.2.1.0 Machine Name: ATLVPEROWEB01

Segment	Organization	Voter	Designated Proxy	Ballot	NERC Memo
5	NRG - NRG Energy, Inc.	Patricia Lynch		Abstain	N/A
5	OGE Energy - Oklahoma Gas and Electric Co.	Patrick Wells		Affirmative	N/A
5	Oglethorpe Power Corporation	Donna Johnson		Negative	Third-Party Comments
5	Oklahoma Municipal Power Authority	Patrick Tuttle		Abstain	N/A
5	Omaha Public Power District	Kayleigh Wilkerson		Negative	Third-Party Comments
5	OTP - Otter Tail Power Company	Stacy Wahlund		Affirmative	N/A
5	Pacific Gas and Electric Company	Tyler Brun	Bob Cardle	Negative	Comments Submitted
5	Platte River Power Authority	Jon Osell		Affirmative	N/A
5	Portland General Electric Co.	Ryan Olson		Negative	Comments Submitted
5	PPL - Louisville Gas and Electric Co.	Julie Hostrander		Negative	Comments Submitted
5	PSEG Nuclear LLC	Tim Kucey		None	N/A
5	Public Utility District No. 1 of Chelan County	Rebecca Wickel		Negative	Comments Submitted
5	Public Utility District No. 1 of Snohomish County	Becky Burden		Affirmative	N/A
5	Sacramento Municipal Utility District	Ryder Couch	Tim Kelley	Affirmative	N/A
5	Salt River Project	Thomas Johnson		Negative	Comments Submitted
5	Santee Cooper	Carey Salisbury		Affirmative	N/A
5	Seattle City Light	Chris Shultz		Affirmative	N/A
5	Seminole Electric Cooperative, Inc.	Melanie Wong		None	N/A

© 2026 - NERC Ver 4.2.1.0 Machine Name: ATLVPEROWEB01

Segment	Organization	Voter	Designated Proxy	Ballot	NERC Memo
5	Sempra - San Diego Gas and Electric	Jennifer Wright		Negative	Third-Party Comments
5	Southern Company - Southern Company Generation	Leslie Burke		Negative	Comments Submitted
5	Southern Indiana Gas and Electric Co.	Larry Rogers		Negative	Comments Submitted
5	Talen Generation, LLC	Donald Lock		None	N/A
5	Tennessee Valley Authority	Darren Boehm		Affirmative	N/A
5	Tri-State G and T Association, Inc.	Sergio Banuelos		Affirmative	N/A
5	U.S. Bureau of Reclamation	Wendy Kalidass		Affirmative	N/A
5	Xcel Energy, Inc.	Gerry Huitt		Negative	Third-Party Comments
6	AEP	Mathew Miller		Negative	Comments Submitted
6	Ameren - Ameren Services	Robert Quinlivan		Affirmative	N/A
6	APS - Arizona Public Service Co.	Marcus Bortman		Negative	Comments Submitted
6	Arkansas Electric Cooperative Corporation	Bruce Walkup		Abstain	N/A
6	Associated Electric Cooperative, Inc.	Brian Ackermann		Affirmative	N/A
6	Austin Energy	Imane Mrini		Affirmative	N/A
6	Berkshire Hathaway - PacifiCorp	Lindsay Wickizer		None	N/A
6	Black Hills Corporation	Rachel Schuldt		Affirmative	N/A
6	Bonneville Power Administration	Tanner Brier		Negative	Comments Submitted
6	Cleco Corporation	Robert Hirchak	Clay Walker	Negative	Comments Submitted

© 2026 - NERC Ver 4.2.1.0 Machine Name: ATLVPEROWEB01

Segment	Organization	Voter	Designated Proxy	Ballot	NERC Memo
6	Con Ed - Consolidated Edison Co. of New York	Jason Chandler		Negative	Third-Party Comments
6	Constellation	Kimberly Turco		Abstain	N/A
6	Dominion - Dominion Resources, Inc.	Sean Bodkin		Negative	Comments Submitted
6	Duke Energy	John Sturgeon		Negative	Third-Party Comments
6	Edison International - Southern California Edison Company	Stephanie Kenny		Negative	Comments Submitted
6	Entergy	Julie Hall		Negative	Comments Submitted
6	Evergy	Tiffany Lake	Alan Kloster	Negative	Comments Submitted
6	FirstEnergy - FirstEnergy Corporation	Stacey Sheehan		Affirmative	N/A
6	Great River Energy	Brian Meloy		None	N/A
6	Imperial Irrigation District	Diana Torres	Denise Sanchez	Affirmative	N/A
6	Lincoln Electric System	Eric Ruskamp		Abstain	N/A
6	Los Angeles Department of Water and Power	Anton Vu		Abstain	N/A
6	Muscatine Power and Water	Nicholas Burns		None	N/A
6	New York Power Authority	Shelly Dineen		Negative	Third-Party Comments
6	NextEra Energy - Florida Power and Light Co.	Justin Welty		Negative	Comments Submitted
6	NiSource - Northern Indiana Public Service Co.	Rebecca Blair		Negative	Comments Submitted
6	Northern California Power Agency	Dennis Sismaet	Chris Carnesi	None	N/A
6	OGE Energy - Oklahoma Gas and Electric Co.	Ashley F Stringer		Affirmative	N/A

© 2026 - NERC Ver 4.2.1.0 Machine Name: ATLVPEROWEB01

Segment	Organization	Voter	Designated Proxy	Ballot	NERC Memo
6	Omaha Public Power District	Shonda Markus		Negative	Third-Party Comments
6	Platte River Power Authority	Sabrina Martz		Affirmative	N/A
6	Portland General Electric Co.	Stefanie Burke		Negative	Comments Submitted
6	Powerex Corporation	Raj Hundal		Abstain	N/A
6	PPL - Louisville Gas and Electric Co.	Linn Oelker		Negative	Comments Submitted
6	PSEG - PSEG Energy Resources and Trade LLC	Laura Wu		None	N/A
6	Public Utility District No. 1 of Chelan County	Tamarra Hardie		Negative	Comments Submitted
6	Sacramento Municipal Utility District	Charles Norton	Tim Kelley	Affirmative	N/A
6	Salt River Project	Timothy Singh		Negative	Comments Submitted
6	Santee Cooper	Marty Watson		Affirmative	N/A
6	Seattle City Light	Daren Brubaker		Affirmative	N/A
6	Seminole Electric Cooperative, Inc.	Bret Galbraith		None	N/A
6	Snohomish County PUD No. 1	John Liang		Affirmative	N/A
6	Southern Company - Southern Company Generation and Energy Marketing	Matthew O'neal		Negative	Comments Submitted
6	Southern Indiana Gas and Electric Co.	Kati Barr		Negative	Comments Submitted
6	Tennessee Valley Authority	Jeffrey Powell		Affirmative	N/A
6	Western Area Power Administration	Jennifer Neville		Affirmative	N/A
6	Xcel Energy, Inc.	Steve Szablya		None	N/A

© 2026 - NERC Ver 4.2.1.0 Machine Name: ATLVPEROWEB01

Segment	Organization	Voter	Designated Proxy	Ballot	NERC Memo
10	Midwest Reliability Organization	Mark Flanary		Negative	Comments Submitted
10	New York State Reliability Council	Wesley Yeomans		Affirmative	N/A
10	Northeast Power Coordinating Council	Gerry Dunbar		Abstain	N/A
10	ReliabilityFirst	Tremayne Brown		Negative	Comments Submitted
10	SERC Reliability Corporation	Dave Krueger		Abstain	N/A
10	Texas Reliability Entity, Inc.	Rachel Coyne		Abstain	N/A
10	Western Electricity Coordinating Council	Steven Rueckert		Affirmative	N/A

Previous 1 Next

Showing 1 to 295 of 295 entries

© 2026 - NERC Ver 4.2.1.0 Machine Name: ATLVPEROWEB01

BALLOT RESULTS

Ballot Name: Project 2023-06 CIP-014 Risk Assessment Refinement CIP-014-4 | Non-Binding Poll AB 2 NB
Voting Start Date: 10/28/2024 12:01:00 AM
Voting End Date: 11/6/2024 8:00:00 PM
Ballot Type: NB
Ballot Activity: AB
Ballot Series: 2
Total # Votes: 247
Total Ballot Pool: 283
Quorum: 87.28
Quorum Established Date: 11/6/2024 4:00:57 PM
Weighted Segment Value: 43.01

Segment	Ballot Pool	Segment Weight	Affirmative Votes	Affirmative Fraction	Negative Votes	Negative Fraction	Abstain	No Vote
Segment: 1	82	1	26	0.456	31	0.544	17	8
Segment: 2	7	0.1	0	0	1	0.1	5	1
Segment: 3	65	1	22	0.458	26	0.542	9	8
Segment: 4	14	0.8	4	0.4	4	0.4	4	2
Segment: 5	64	1	16	0.39	25	0.61	14	9
Segment: 6	44	1	10	0.357	18	0.643	8	8
Segment: 7	0	0	0	0	0	0	0	0
Segment: 8	0	0	0	0	0	0	0	0
Segment: 9	0	0	0	0	0	0	0	0

© 2026 - NERC Ver 4.2.1.0 Machine Name: ATLVPEROWEB01

Segment	Ballot Pool	Segment Weight	Affirmative Votes	Affirmative Fraction	Negative Votes	Negative Fraction	Abstain	No Vote
Segment: 10	7	0.3	2	0.2	1	0.1	4	0
Totals:	283	5.2	80	2.262	106	2.938	61	36

BALLOT POOL MEMBERS

Show All entries Search: Search

Segment	Organization	Voter	Designated Proxy	Ballot	NERC Memo
1	AEP - AEP Service Corporation	Dennis Sauriol		Negative	No Comment Submitted
1	Allete - Minnesota Power, Inc.	Hillary Creurer		None	N/A
1	Ameren - Ameren Services	Tamara Evey		Abstain	N/A
1	American Transmission Company, LLC	Amy Wilke		Negative	No Comment Submitted
1	APS - Arizona Public Service Co.	Daniela Atanasovski		Negative	No Comment Submitted
1	Arkansas Electric Cooperative Corporation	Emily Corley		None	N/A
1	Associated Electric Cooperative, Inc.	Mark Riley		Affirmative	N/A
1	Austin Energy	Thomas Standifur		Affirmative	N/A

© 2026 - NERC Ver 4.2.1.0 Machine Name: ATLVPEROWEB01

Segment	Organization	Voter	Designated Proxy	Ballot	NERC Memo
1	Balancing Authority of Northern California	Kevin Smith	Tim Kelley	Affirmative	N/A
1	BC Hydro and Power Authority	Adrian Andreoiu		Abstain	N/A
1	Berkshire Hathaway Energy - MidAmerican Energy Co.	Terry Harbour		Affirmative	N/A
1	Black Hills Corporation	Travis Grablander		Abstain	N/A
1	Bonneville Power Administration	Kamala Rogers-Holliday		Negative	No Comment Submitted
1	CenterPoint Energy Houston Electric, LLC	Daniela Hammons		Negative	No Comment Submitted
1	Central Iowa Power Cooperative	Kevin Lyons		Affirmative	N/A
1	City Utilities of Springfield, Missouri	Michael Buyce		Negative	No Comment Submitted
1	Colorado Springs Utilities	Corey Walker		Affirmative	N/A
1	Con Ed - Consolidated Edison Co. of New York	Dermot Smyth		Negative	No Comment Submitted
1	Dairyland Power Cooperative	Karrie Schuldt		None	N/A
1	Dominion - Dominion Virginia Power	Steven Belle		Negative	No Comment Submitted
1	Duke Energy	Katherine Street	Ellese Murphy	Negative	No Comment Submitted
1	Edison International - Southern California Edison Company	Robert Blackney		Negative	No Comment Submitted

© 2026 - NERC Ver 4.2.1.0 Machine Name: ATLVPEROWEB01

Segment	Organization	Voter	Designated Proxy	Ballot	NERC Memo
1	Entergy	Brian Lindsey		Negative	No Comment Submitted
1	Evergy	Kevin Frick	Alan Kloster	Negative	No Comment Submitted
1	Eversource Energy	Joshua London		Affirmative	N/A
1	Exelon	Daniel Gacek		Affirmative	N/A
1	FirstEnergy - FirstEnergy Corporation	John Martinez		Affirmative	N/A
1	Georgia Transmission Corporation	Greg Davis	Stephen Stafford	Negative	No Comment Submitted
1	Glencoe Light and Power Commission	Terry Volkmann		Negative	No Comment Submitted
1	Great River Energy	Gordon Pietsch		Affirmative	N/A
1	Hydro One Networks, Inc.	Emma Halilovic	Lidija Efremova	Abstain	N/A
1	Hydro-Quebec (HQ)	Nicolas Turcotte	Chantal Mazza	Negative	No Comment Submitted
1	IDACORP - Idaho Power Company	Sean Steffensen		Affirmative	N/A
1	Imperial Irrigation District	Jesus Sammy Alcaraz	Denise Sanchez	Affirmative	N/A
1	International Transmission Company Holdings Corporation	Michael Moltane	Gail Elliott	Negative	No Comment Submitted
1	Lakeland Electric	Larry Watt		Affirmative	N/A
1	Lincoln Electric System	Josh Johnson		Abstain	N/A
1	Long Island Power Authority	Isidoro Behar		Abstain	N/A
1	Los Angeles Department of Water and Power	faranak sarbaz		Abstain	N/A

© 2026 - NERC Ver 4.2.1.0 Machine Name: ATLVPEROWEB01

Segment	Organization	Voter	Designated Proxy	Ballot	NERC Memo
1	Lower Colorado River Authority	Matt Lewis	James Baldwin	Affirmative	N/A
1	M and A Electric Power Cooperative	William Price		Affirmative	N/A
1	Minnkota Power Cooperative Inc.	Theresa Allard	Nikki Carson-Marquis	Negative	No Comment Submitted
1	Muscatine Power and Water	Andrew Kurriger		Abstain	N/A
1	N.W. Electric Power Cooperative, Inc.	Mark Ramsey		Affirmative	N/A
1	National Grid USA	Michael Jones		Negative	No Comment Submitted
1	NB Power Corporation	Jeffrey Streifling		Negative	No Comment Submitted
1	Nebraska Public Power District	Jamison Cawley		Negative	No Comment Submitted
1	Network and Security Technologies	Nick Lauriat	Roger Fradenburgh	Abstain	N/A
1	New York Power Authority	Daniel Valle		Negative	No Comment Submitted
1	NextEra Energy - Florida Power and Light Co.	Silvia Mitchell		Abstain	N/A
1	NiSource - Northern Indiana Public Service Co.	Alison Nickells		Negative	No Comment Submitted
1	Northeast Missouri Electric Power Cooperative	Brett Douglas		Affirmative	N/A
1	OGE Energy - Oklahoma Gas and Electric Co.	Terri Pyle		Affirmative	N/A

© 2026 - NERC Ver 4.2.1.0 Machine Name: ATLVPEROWEB01

Segment	Organization	Voter	Designated Proxy	Ballot	NERC Memo
1	Oncor Electric Delivery	Byron Booker	Lucinda Bradshaw	None	N/A
1	Pacific Gas and Electric Company	Marco Rios	Bob Cardle	Negative	No Comment Submitted
1	Pedernales Electric Cooperative, Inc.	Bradley Collard		None	N/A
1	Platte River Power Authority	Marissa Archie		Abstain	N/A
1	PNM Resources - Public Service Company of New Mexico	Lynn Goldstein		Negative	No Comment Submitted
1	Portland General Electric Co.	Brooke Jockin		Negative	No Comment Submitted
1	PPL Electric Utilities Corporation	Michelle McCartney Longo		None	N/A
1	PSEG - Public Service Electric and Gas Co.	Karen Arnold		None	N/A
1	Public Utility District No. 1 of Chelan County	Diane E Landry		Negative	No Comment Submitted
1	Public Utility District No. 1 of Snohomish County	Alyssia Rhoads		Affirmative	N/A
1	Public Utility District No. 2 of Grant County, Washington	Joanne Anderson		Abstain	N/A
1	Sacramento Municipal Utility District	Wei Shao	Tim Kelley	Affirmative	N/A
1	Salt River Project	Laura Somak		Negative	No Comment Submitted
1	Santee Cooper	Chris Wagner		Abstain	N/A
1	SaskPower	Wayne Guttormson		Abstain	N/A

© 2026 - NERC Ver 4.2.1.0 Machine Name: ATLVPEROWEB01

Segment	Organization	Voter	Designated Proxy	Ballot	NERC Memo
1	Seminole Electric Cooperative, Inc.	Kristine Ward		None	N/A
1	Sempra - San Diego Gas and Electric	Mo Derbas		Negative	No Comment Submitted
1	Sho-Me Power Electric Cooperative	Olivia Olson		Affirmative	N/A
1	Southern Company - Southern Company Services, Inc.	Matt Carden		Negative	No Comment Submitted
1	Southwestern Power Administration	Angela Wheat		Abstain	N/A
1	Sunflower Electric Power Corporation	Paul Mehlhaff		Affirmative	N/A
1	Tacoma Public Utilities (Tacoma, WA)	John Merrell	Jennie Wike	Affirmative	N/A
1	Tallahassee Electric (City of Tallahassee, FL)	Scott Langston		Negative	No Comment Submitted
1	Tennessee Valley Authority	David Plumb		Abstain	N/A
1	Tri-State G and T Association, Inc.	Donna Wood		Affirmative	N/A
1	U.S. Bureau of Reclamation	Richard Jackson		Affirmative	N/A
1	Unisource - Tucson Electric Power Co.	Jessica Cordero		Negative	No Comment Submitted
1	VELCO -Vermont Electric Power Company, Inc.	Randall Buswell		Abstain	N/A
1	Western Area Power Administration	Ben Hammer		Affirmative	N/A
2	California ISO	Darcy O'Connell		Abstain	N/A
2	Electric Reliability Council of Texas, Inc.	Kennedy Meier		Abstain	N/A

© 2026 - NERC Ver 4.2.1.0 Machine Name: ATLVPEROWEB01

Segment	Organization	Voter	Designated Proxy	Ballot	NERC Memo
2	ISO New England, Inc.	John Pearson		Negative	No Comment Submitted
2	Midcontinent ISO, Inc.	Kirsten Rowley		Abstain	N/A
2	New York Independent System Operator	Gregory Campoli		None	N/A
2	PJM Interconnection, L.L.C.	Thomas Foster	Elizabeth Davis	Abstain	N/A
2	Southwest Power Pool, Inc. (RTO)	Joshua Phillips		Abstain	N/A
3	AEP	Leshel Hutchings		Negative	No Comment Submitted
3	Ameren - Ameren Services	David Jendras Sr	Nick Leathers	Abstain	N/A
3	APS - Arizona Public Service Co.	Jessica Lopez		Negative	No Comment Submitted
3	Arkansas Electric Cooperative Corporation	Ayslynn Mcavoy		None	N/A
3	Associated Electric Cooperative, Inc.	Todd Bennett		Affirmative	N/A
3	Austin Energy	Lovita Griffin		Affirmative	N/A
3	Avista - Avista Corporation	Robert Follini		Affirmative	N/A
3	BC Hydro and Power Authority	Ming Jiang		Abstain	N/A
3	Berkshire Hathaway Energy - MidAmerican Energy Co.	Joseph Amato		Affirmative	N/A
3	Black Hills Corporation	Josh Combs	Carly Miller	Abstain	N/A
3	Bonneville Power Administration	Ron Sporseen		Negative	No Comment Submitted
3	Buckeye Power, Inc.	Tom Schmidt	Ryan Strom	Abstain	N/A

© 2026 - NERC Ver 4.2.1.0 Machine Name: ATLVPEROWEB01

Segment	Organization	Voter	Designated Proxy	Ballot	NERC Memo
3	Central Electric Power Cooperative (Missouri)	Adam Weber		Affirmative	N/A
3	City Utilities of Springfield, Missouri	Jessica Morrissey		Negative	No Comment Submitted
3	Colorado Springs Utilities	Hillary Dobson		Affirmative	N/A
3	Con Ed - Consolidated Edison Co. of New York	Lincoln Burton		Negative	No Comment Submitted
3	Dominion - Dominion Virginia Power	Victoria Crider		Negative	No Comment Submitted
3	Duke Energy - Florida Power Corporation	Marcelo Pesantez		Negative	No Comment Submitted
3	Edison International - Southern California Edison Company	Romel Aquino		Negative	No Comment Submitted
3	Entergy	James Keele		Negative	No Comment Submitted
3	Evergy	Marcus Moor	Alan Kloster	Negative	No Comment Submitted
3	Eversource Energy	Vicki O'Leary		Affirmative	N/A
3	Exelon	Kinte Whitehead		Affirmative	N/A
3	FirstEnergy - FirstEnergy Corporation	Aaron Ghodooshim		Affirmative	N/A
3	Georgia System Operations Corporation	Scott McGough		None	N/A
3	Great River Energy	Michael Brytowski		Affirmative	N/A
3	Imperial Irrigation District	George Kirschner	Denise Sanchez	Affirmative	N/A
3	KAMO Electric Cooperative	Tony Gott		Affirmative	N/A

© 2026 - NERC Ver 4.2.0.0 Machine Name: ATLVPEROWEB01

Segment	Organization	Voter	Designated Proxy	Ballot	NERC Memo
3	Lincoln Electric System	Sam Christensen		Abstain	N/A
3	Los Angeles Department of Water and Power	Fausto Serratos		Abstain	N/A
3	M and A Electric Power Cooperative	Gary Dollins		Affirmative	N/A
3	MEAG Power	Roger Brand	Rebika Yitna	Negative	No Comment Submitted
3	MGE Energy - Madison Gas and Electric Co.	Benjamin Widder		Affirmative	N/A
3	Muscatine Power and Water	Seth Shoemaker		Abstain	N/A
3	National Grid USA	Brian Shanahan		Negative	No Comment Submitted
3	Nebraska Public Power District	Tony Eddleman		Negative	No Comment Submitted
3	New York Power Authority	Richard Machado		Negative	No Comment Submitted
3	NextEra Energy - Florida Power and Light Co.	Karen Demos		Negative	No Comment Submitted
3	NiSource - Northern Indiana Public Service Co.	Steven Taddeucci		Negative	No Comment Submitted
3	Northeast Missouri Electric Power Cooperative	Skyler Wiegmann		Affirmative	N/A
3	Northern California Power Agency	Michael Whitney	Chris Carnesi	None	N/A
3	NW Electric Power Cooperative, Inc.	Heath Henry		Affirmative	N/A
3	OGE Energy - Oklahoma Gas and Electric Co.	Donald Hargrove		Affirmative	N/A

© 2026 - NERC Ver 4.2.1.0 Machine Name: ATLVPEROWEB01

Segment	Organization	Voter	Designated Proxy	Ballot	NERC Memo
3	Omaha Public Power District	David Heins		Negative	No Comment Submitted
3	Orlando Utilities Commission	Ballard Mutters		None	N/A
3	Pacific Gas and Electric Company	Sandra Ellis	Bob Cardle	Negative	No Comment Submitted
3	Platte River Power Authority	Richard Kiess		Affirmative	N/A
3	PNM Resources - Public Service Company of New Mexico	Amy Wesselkamper		Negative	No Comment Submitted
3	Portland General Electric Co.	Mayra Franco		Negative	No Comment Submitted
3	PPL - Louisville Gas and Electric Co.	James Frank		None	N/A
3	PSEG - Public Service Electric and Gas Co.	Christopher Murphy		None	N/A
3	Public Utility District No. 1 of Chelan County	Joyce Gundry		Negative	No Comment Submitted
3	Puget Sound Energy, Inc.	Kelley Sargent		Negative	No Comment Submitted
3	Sacramento Municipal Utility District	Nicole Looney	Tim Kelley	Affirmative	N/A
3	Salt River Project	Mathew Weber		Negative	No Comment Submitted
3	Santee Cooper	Vicky Budreau		Abstain	N/A
3	Seminole Electric Cooperative, Inc.	Usama Tahir		None	N/A

© 2026 - NERC Ver 4.2.1.0 Machine Name: ATLVPEROWEB01

Segment	Organization	Voter	Designated Proxy	Ballot	NERC Memo
3	Sempra - San Diego Gas and Electric	Bryan Bennett		Negative	No Comment Submitted
3	Sho-Me Power Electric Cooperative	Jarrod Murdaugh		Affirmative	N/A
3	Snohomish County PUD No. 1	Holly Chaney		Affirmative	N/A
3	Southern Company - Alabama Power Company	Joel Dembowski		Negative	No Comment Submitted
3	Southern Indiana Gas and Electric Co.	Ryan Snyder		Negative	No Comment Submitted
3	Tennessee Valley Authority	Ian Grant		Abstain	N/A
3	Tri-State G and T Association, Inc.	Ryan Walter		Affirmative	N/A
3	TXNM Energy	Scott Thompson		None	N/A
4	Alliant Energy Corporation Services, Inc.	Larry Heckert		Negative	No Comment Submitted
4	Arkansas Electric Cooperative Corporation	Jenni Sudduth		Abstain	N/A
4	Buckeye Power, Inc.	Jason Procuniar	Ryan Strom	Abstain	N/A
4	City Utilities of Springfield, Missouri	Jerry Bradshaw		Negative	No Comment Submitted
4	FirstEnergy - FirstEnergy Corporation	Mark Garza		Affirmative	N/A
4	Georgia System Operations Corporation	Katrina Lyons		Negative	No Comment Submitted
4	Northern California Power Agency	Marty Hostler		None	N/A

© 2026 - NERC Ver 4.2.1.0 Machine Name: ATLVPEROWEB01

Segment	Organization	Voter	Designated Proxy	Ballot	NERC Memo
4	Oklahoma Municipal Power Authority	Michael Watt		Abstain	N/A
4	Public Utility District No. 1 of Snohomish County	John D. Martinsen		Affirmative	N/A
4	Public Utility District No. 2 of Grant County, Washington	Karla Weaver		Abstain	N/A
4	Sacramento Municipal Utility District	Foung Mua	Tim Kelley	Affirmative	N/A
4	Utility Services, Inc.	Carver Powers		Affirmative	N/A
4	WEC Energy Group, Inc.	Candace Morakinyo		None	N/A
4	Western Power Pool	Kevin Conway		Negative	No Comment Submitted
5	AEP	Thomas Foltz		Negative	No Comment Submitted
5	Ameren - Ameren Missouri	Sam Dwyer		Abstain	N/A
5	APS - Arizona Public Service Co.	Andrew Smith		Negative	No Comment Submitted
5	Associated Electric Cooperative, Inc.	Chuck Booth		Affirmative	N/A
5	Austin Energy	Michael Dillard		Affirmative	N/A
5	Avista - Avista Corporation	Glen Farmer		Affirmative	N/A
5	BC Hydro and Power Authority	Quincy Wang		Abstain	N/A
5	Berkshire Hathaway - NV Energy	Dwanique Spiller		Affirmative	N/A
5	Black Hills Corporation	Sheila Suurmeier	Carly Miller	Abstain	N/A
5	Buckeye Power, Inc.	Kevin Zemanek	Ryan Strom	Abstain	N/A
5	California Department of Water Resources	ASM Mostafa		None	N/A

© 2026 - NERC Ver 4.2.1.0 Machine Name: ATLVPEROWEB01

Segment	Organization	Voter	Designated Proxy	Ballot	NERC Memo
5	CMS Energy - Consumers Energy Company	David Greyerbiehl		None	N/A
5	Colorado Springs Utilities	Jeffrey Icke		Affirmative	N/A
5	Con Ed - Consolidated Edison Co. of New York	Michelle Pagano		Negative	No Comment Submitted
5	Constellation	Alison MacKellar		Abstain	N/A
5	Cowlitz County PUD	Deanna Carlson		Abstain	N/A
5	Dairyland Power Cooperative	Tommy Drea		Negative	No Comment Submitted
5	Dominion - Dominion Resources, Inc.	Barbara Marion		Negative	No Comment Submitted
5	DTE Energy - Detroit Edison Company	Mohamad Elhusseini		Abstain	N/A
5	Duke Energy	Dale Goodwine		Negative	No Comment Submitted
5	Edison International - Southern California Edison Company	Selene Willis		Negative	No Comment Submitted
5	Electric Power Supply Association	Bill Zuretti		None	N/A
5	Entergy - Entergy Services, Inc.	Gail Golden		Negative	No Comment Submitted
5	Evergy	Jeremy Harris	Alan Kloster	Negative	No Comment Submitted
5	FirstEnergy - FirstEnergy Corporation	Matthew Augustin		Affirmative	N/A
5	Great River Energy	Jacalynn Bentz		Affirmative	N/A
5	Greybeard Compliance Services, LLC	Mike Gabriel		Abstain	N/A

Segment	Organization	Voter	Designated Proxy	Ballot	NERC Memo
5	Hydro-Quebec (HQ)	Junji Yamaguchi	Chantal Mazza	Negative	No Comment Submitted
5	Imperial Irrigation District	Tino Zaragoza	Denise Sanchez	Affirmative	N/A
5	JEA	John Babik		None	N/A
5	Lincoln Electric System	Brittany Millard		Abstain	N/A
5	Los Angeles Department of Water and Power	Robert Kerrigan		Abstain	N/A
5	Lower Colorado River Authority	Teresa Krabe		Affirmative	N/A
5	National Grid USA	Robin Berry		Negative	No Comment Submitted
5	NB Power Corporation - New Brunswick Power Transmission Corporation	Erin Wilson		Negative	No Comment Submitted
5	Nebraska Public Power District	Ronald Bender		Negative	No Comment Submitted
5	New York Power Authority	Zahid Qayyum		Negative	No Comment Submitted
5	NextEra Energy	Richard Vendetti		Negative	No Comment Submitted
5	NiSource - Northern Indiana Public Service Co.	Kathryn Tackett		Negative	No Comment Submitted
5	Northern California Power Agency	Jeremy Lawson	Chris Carnesi	None	N/A
5	NRG - NRG Energy, Inc.	Patricia Lynch		Abstain	N/A
5	OGE Energy - Oklahoma Gas and Electric Co.	Patrick Wells		Affirmative	N/A

© 2026 - NERC Ver 4.2.1.0 Machine Name: ATLVPEROWEB01

Segment	Organization	Voter	Designated Proxy	Ballot	NERC Memo
5	Oglethorpe Power Corporation	Donna Johnson		Negative	No Comment Submitted
5	Oklahoma Municipal Power Authority	Patrick Tuttle		Abstain	N/A
5	Omaha Public Power District	Kayleigh Wilkerson		Negative	No Comment Submitted
5	OTP - Otter Tail Power Company	Stacy Wahlund		Affirmative	N/A
5	Pacific Gas and Electric Company	Tyler Brun	Bob Cardle	Negative	No Comment Submitted
5	Platte River Power Authority	Jon Osell		Affirmative	N/A
5	Portland General Electric Co.	Ryan Olson		Negative	No Comment Submitted
5	PPL - Louisville Gas and Electric Co.	Julie Hostrander		None	N/A
5	PSEG Nuclear LLC	Tim Kucey		None	N/A
5	Public Utility District No. 1 of Chelan County	Rebecca Wickel		Negative	No Comment Submitted
5	Public Utility District No. 1 of Snohomish County	Becky Burden		Affirmative	N/A
5	Sacramento Municipal Utility District	Ryder Couch	Tim Kelley	Affirmative	N/A
5	Salt River Project	Thomas Johnson		Negative	No Comment Submitted
5	Santee Cooper	Carey Salisbury		Abstain	N/A
5	Seminole Electric Cooperative, Inc.	Melanie Wong		None	N/A

© 2026 - NERC Ver 4.2.1.0 Machine Name: ATLVPEROWEB01

Segment	Organization	Voter	Designated Proxy	Ballot	NERC Memo
5	Sempra - San Diego Gas and Electric	Jennifer Wright		Negative	No Comment Submitted
5	Southern Company - Southern Company Generation	Leslie Burke		Negative	No Comment Submitted
5	Southern Indiana Gas and Electric Co.	Larry Rogers		Negative	No Comment Submitted
5	Tennessee Valley Authority	Darren Boehm		None	N/A
5	Tri-State G and T Association, Inc.	Sergio Banuelos		Affirmative	N/A
5	U.S. Bureau of Reclamation	Wendy Kalidass		Affirmative	N/A
5	Xcel Energy, Inc.	Gerry Huitt		Abstain	N/A
6	AEP	Mathew Miller		Negative	No Comment Submitted
6	Ameren - Ameren Services	Robert Quinlivan		Abstain	N/A
6	APS - Arizona Public Service Co.	Marcus Bortman		Negative	No Comment Submitted
6	Arkansas Electric Cooperative Corporation	Bruce Walkup		Abstain	N/A
6	Associated Electric Cooperative, Inc.	Brian Ackermann		Affirmative	N/A
6	Austin Energy	Imane Mrini		Affirmative	N/A
6	Berkshire Hathaway - PacifiCorp	Lindsay Wickizer		None	N/A
6	Black Hills Corporation	Rachel Schuldt		Abstain	N/A
6	Bonneville Power Administration	Tanner Brier		Negative	No Comment Submitted

© 2026 - NERC Ver 4.2.1.0 Machine Name: ATLVPEROWEB01

Segment	Organization	Voter	Designated Proxy	Ballot	NERC Memo
6	Con Ed - Consolidated Edison Co. of New York	Jason Chandler		Negative	No Comment Submitted
6	Constellation	Kimberly Turco		Abstain	N/A
6	Dominion - Dominion Resources, Inc.	Sean Bodkin		Negative	No Comment Submitted
6	Duke Energy	John Sturgeon		Negative	No Comment Submitted
6	Edison International - Southern California Edison Company	Stephanie Kenny		Negative	No Comment Submitted
6	Entergy	Julie Hall		Negative	No Comment Submitted
6	Evergy	Tiffany Lake	Alan Kloster	Negative	No Comment Submitted
6	FirstEnergy - FirstEnergy Corporation	Stacey Sheehan		Affirmative	N/A
6	Great River Energy	Brian Meloy		None	N/A
6	Imperial Irrigation District	Diana Torres	Denise Sanchez	Affirmative	N/A
6	Lincoln Electric System	Eric Ruskamp		Abstain	N/A
6	Los Angeles Department of Water and Power	Anton Vu		Abstain	N/A
6	Muscatine Power and Water	Nicholas Burns		None	N/A
6	New York Power Authority	Shelly Dineen		Negative	No Comment Submitted
6	NextEra Energy - Florida Power and Light Co.	Justin Welty		Negative	No Comment Submitted

© 2026 - NERC Ver 4.2.1.0 Machine Name: ATLVPEROWEB01

Segment	Organization	Voter	Designated Proxy	Ballot	NERC Memo
6	NiSource - Northern Indiana Public Service Co.	Rebecca Blair		Negative	No Comment Submitted
6	Northern California Power Agency	Dennis Sismaet	Chris Carnesi	None	N/A
6	OGE Energy - Oklahoma Gas and Electric Co.	Ashley F Stringer		Affirmative	N/A
6	Omaha Public Power District	Shonda Markus		Negative	No Comment Submitted
6	Platte River Power Authority	Sabrina Martz		Affirmative	N/A
6	Portland General Electric Co.	Stefanie Burke		Negative	No Comment Submitted
6	Powerex Corporation	Raj Hundal		Abstain	N/A
6	PPL - Louisville Gas and Electric Co.	Linn Oelker		None	N/A
6	PSEG - PSEG Energy Resources and Trade LLC	Laura Wu		None	N/A
6	Public Utility District No. 1 of Chelan County	Tamarra Hardie		Negative	No Comment Submitted
6	Sacramento Municipal Utility District	Charles Norton	Tim Kelley	Affirmative	N/A
6	Salt River Project	Timothy Singh		Negative	No Comment Submitted
6	Santee Cooper	Marty Watson		Abstain	N/A
6	Seattle City Light	Daren Brubaker		None	N/A
6	Seminole Electric Cooperative, Inc.	Bret Galbraith		None	N/A
6	Snohomish County PUD No. 1	John Liang		Affirmative	N/A

© 2026 - NERC Ver 4.2.1.0 Machine Name: ATLVPEROWEB01

Segment	Organization	Voter	Designated Proxy	Ballot	NERC Memo
6	Southern Company - Southern Company Generation and Energy Marketing	Matthew O'neal		Negative	No Comment Submitted
6	Southern Indiana Gas and Electric Co.	Kati Barr		Negative	No Comment Submitted
6	Tennessee Valley Authority	Jeffrey Powell		Affirmative	N/A
6	Western Area Power Administration	Jennifer Neville		Affirmative	N/A
10	Midwest Reliability Organization	Mark Flanary		Affirmative	N/A
10	New York State Reliability Council	Wesley Yeomans		Affirmative	N/A
10	Northeast Power Coordinating Council	Gerry Dunbar		Abstain	N/A
10	ReliabilityFirst	Tremayne Brown		Negative	No Comment Submitted
10	SERC Reliability Corporation	Dave Krueger		Abstain	N/A
10	Texas Reliability Entity, Inc.	Rachel Coyne		Abstain	N/A
10	Western Electricity Coordinating Council	Steven Rueckert		Abstain	N/A

Previous 1 Next

Showing 1 to 283 of 283 entries

© 2026 - NERC Ver 4.2.1.0 Machine Name: ATLVPEROWEB01

BALLOT RESULTS

Comment: View Comment Results (/CommentResults/Index/352)
Ballot Name: Project 2023-06 CIP-014 Risk Assessment Refinement Implementation Plan AB 2 OT
Voting Start Date: 10/28/2024 12:01:00 AM
Voting End Date: 11/6/2024 8:00:00 PM
Ballot Type: OT
Ballot Activity: AB
Ballot Series: 2
Total # Votes: 256
Total Ballot Pool: 289
Quorum: 88.58
Quorum Established Date: 11/6/2024 3:38:52 PM
Weighted Segment Value: 56.18

Segment	Ballot Pool	Segment Weight	Affirmative Votes	Affirmative Fraction	Negative Votes w/ Comment	Negative Fraction w/ Comment	Negative Votes w/o Comment	Abstain	No Vote
Segment: 1	85	1	39	0.574	29	0.426	0	10	7
Segment: 2	7	0	0	0	0	0	0	6	1
Segment: 3	67	1	30	0.566	23	0.434	0	6	8
Segment: 4	14	0.7	3	0.3	4	0.4	0	4	3
Segment: 5	64	1	24	0.511	23	0.489	0	10	7
Segment: 6	45	1	17	0.515	16	0.485	0	5	7
Segment: 7	0	0	0	0	0	0	0	0	0
Segment: 8	0	0	0	0	0	0	0	0	0

© 2026 - NERC Ver 4.2.1.0 Machine Name: ATLVPEROWEB01

Segment	Ballot Pool	Segment Weight	Affirmative Votes	Affirmative Fraction	Negative Votes w/ Comment	Negative Fraction w/ Comment	Negative Votes w/o Comment	Abstain	No Vote
Segment: 9	0	0	0	0	0	0	0	0	0
Segment: 10	7	0.4	4	0.4	0	0	0	3	0
Totals:	289	5.1	117	2.865	95	2.235	0	44	33

BALLOT POOL MEMBERS

Show All entries Search: Search

Segment	Organization	Voter	Designated Proxy	Ballot	NERC Memo
1	AEP - AEP Service Corporation	Dennis Sauriol		Negative	Comments Submitted
1	Allete - Minnesota Power, Inc.	Hillary Creurer		None	N/A
1	Ameren - Ameren Services	Tamara Evey		Affirmative	N/A
1	American Transmission Company, LLC	Amy Wilke		Affirmative	N/A
1	APS - Arizona Public Service Co.	Daniela Atanasovski		Affirmative	N/A
1	Arkansas Electric Cooperative Corporation	Emily Corley		None	N/A
1	Associated Electric Cooperative, Inc.	Mark Riley		Affirmative	N/A
1	Austin Energy	Thomas Standiful		Affirmative	N/A

© 2026 - NERC Ver 4.2.1.0 Machine Name: ATLVPEROWEB01

Segment	Organization	Voter	Designated Proxy	Ballot	NERC Memo
1	Balancing Authority of Northern California	Kevin Smith	Tim Kelley	Affirmative	N/A
1	BC Hydro and Power Authority	Adrian Andreoiu		Abstain	N/A
1	Berkshire Hathaway Energy - MidAmerican Energy Co.	Terry Harbour		Affirmative	N/A
1	Black Hills Corporation	Travis Grablander		Affirmative	N/A
1	Bonneville Power Administration	Kamala Rogers-Holliday		Negative	Comments Submitted
1	CenterPoint Energy Houston Electric, LLC	Daniela Hammons		Negative	Comments Submitted
1	Central Iowa Power Cooperative	Kevin Lyons		Affirmative	N/A
1	City Utilities of Springfield, Missouri	Michael Buyce		Negative	Third-Party Comments
1	Colorado Springs Utilities	Corey Walker		Affirmative	N/A
1	Con Ed - Consolidated Edison Co. of New York	Dermot Smyth		Negative	Third-Party Comments
1	Dairyland Power Cooperative	Karrie Schuldt		None	N/A
1	Dominion - Dominion Virginia Power	Steven Belle		Negative	Comments Submitted
1	Duke Energy	Katherine Street	Ellese Murphy	Affirmative	N/A
1	Edison International - Southern California Edison Company	Robert Blackney		Negative	Comments Submitted
1	Entergy	Brian Lindsey		Negative	Comments Submitted
1	Evergy	Kevin Frick	Alan Kloster	Affirmative	N/A
1	Eversource Energy	Joshua London		Affirmative	N/A
1	Exelon	Daniel Gacek		Affirmative	N/A

© 2026 - NERC Ver 4.2.1.0 Machine Name: ATLVPEROWEB01

Segment	Organization	Voter	Designated Proxy	Ballot	NERC Memo
1	FirstEnergy - FirstEnergy Corporation	John Martinez		Negative	Comments Submitted
1	Georgia Transmission Corporation	Greg Davis	Stephen Stafford	Negative	Comments Submitted
1	Glencoe Light and Power Commission	Terry Volkmann		Negative	Third-Party Comments
1	Great River Energy	Gordon Pietsch		Affirmative	N/A
1	Hydro One Networks, Inc.	Emma Halilovic	Lidija Efremova	Negative	Comments Submitted
1	Hydro-Quebec (HQ)	Nicolas Turcotte	Chantal Mazza	Affirmative	N/A
1	IDACORP - Idaho Power Company	Sean Steffensen		Affirmative	N/A
1	Imperial Irrigation District	Jesus Sammy Alcaraz	Denise Sanchez	Affirmative	N/A
1	International Transmission Company Holdings Corporation	Michael Moltane	Gail Elliott	Negative	Comments Submitted
1	Lakeland Electric	Larry Watt		Affirmative	N/A
1	Lincoln Electric System	Josh Johnson		Abstain	N/A
1	Long Island Power Authority	Isidoro Behar		Abstain	N/A
1	Los Angeles Department of Water and Power	faranak sarbaz		Abstain	N/A
1	Lower Colorado River Authority	Matt Lewis	James Baldwin	Affirmative	N/A
1	M and A Electric Power Cooperative	William Price		Affirmative	N/A
1	Manitoba Hydro	Nazra Gladu		Affirmative	N/A
1	Minnkota Power Cooperative Inc.	Theresa Allard	Nikki Carson-Marquis	Negative	Comments Submitted
1	Muscatine Power and Water	Andrew Kurriger		Abstain	N/A

© 2026 - NERC Ver 4.2.1.0 Machine Name: ATLVPEROWEB01

Segment	Organization	Voter	Designated Proxy	Ballot	NERC Memo
1	N.W. Electric Power Cooperative, Inc.	Mark Ramsey		Affirmative	N/A
1	National Grid USA	Michael Jones		Negative	Third-Party Comments
1	NB Power Corporation	Jeffrey Streifling		Negative	Comments Submitted
1	Nebraska Public Power District	Jamison Cawley		Negative	Comments Submitted
1	Network and Security Technologies	Nick Lauriat	Roger Fradenburgh	Abstain	N/A
1	New York Power Authority	Daniel Valle		Negative	Third-Party Comments
1	NextEra Energy - Florida Power and Light Co.	Silvia Mitchell		Negative	Comments Submitted
1	NiSource - Northern Indiana Public Service Co.	Alison Nickells		Negative	Comments Submitted
1	Northeast Missouri Electric Power Cooperative	Brett Douglas		Affirmative	N/A
1	OGE Energy - Oklahoma Gas and Electric Co.	Terri Pyle		Affirmative	N/A
1	Oncor Electric Delivery	Byron Booker	Lucinda Bradshaw	None	N/A
1	OTP - Otter Tail Power Company	Charles Wicklund		Affirmative	N/A
1	Pacific Gas and Electric Company	Marco Rios	Bob Cardle	Negative	Comments Submitted
1	Pedernales Electric Cooperative, Inc.	Bradley Collard		None	N/A
1	Platte River Power Authority	Marissa Archie		Affirmative	N/A
1	PNM Resources - Public Service Company of New Mexico	Lynn Goldstein		Negative	Comments Submitted

© 2026 - NERC Ver 4.2.1.0 Machine Name: ATLVPEROWEB01

Segment	Organization	Voter	Designated Proxy	Ballot	NERC Memo
1	Portland General Electric Co.	Brooke Jockin		Negative	Comments Submitted
1	PPL Electric Utilities Corporation	Michelle McCartney Longo		Negative	Comments Submitted
1	PSEG - Public Service Electric and Gas Co.	Karen Arnold		None	N/A
1	Public Utility District No. 1 of Chelan County	Diane E Landry		Affirmative	N/A
1	Public Utility District No. 1 of Snohomish County	Alyssia Rhoads		Affirmative	N/A
1	Public Utility District No. 2 of Grant County, Washington	Joanne Anderson		Abstain	N/A
1	Sacramento Municipal Utility District	Wei Shao	Tim Kelley	Affirmative	N/A
1	Salt River Project	Laura Somak		Negative	Comments Submitted
1	Santee Cooper	Chris Wagner		Affirmative	N/A
1	SaskPower	Wayne Guttormson		Abstain	N/A
1	Seminole Electric Cooperative, Inc.	Kristine Ward		None	N/A
1	Sempra - San Diego Gas and Electric	Mo Derbas		Negative	Third-Party Comments
1	Sho-Me Power Electric Cooperative	Olivia Olson		Affirmative	N/A
1	Southern Company - Southern Company Services, Inc.	Matt Carden		Negative	Comments Submitted
1	Southwestern Power Administration	Angela Wheat		Abstain	N/A
1	Sunflower Electric Power Corporation	Paul Mehlhaff		Affirmative	N/A

© 2026 - NERC Ver 4.2.1.0 Machine Name: ATLVPEROWEB01

Segment	Organization	Voter	Designated Proxy	Ballot	NERC Memo
1	Tacoma Public Utilities (Tacoma, WA)	John Merrell	Jennie Wike	Affirmative	N/A
1	Tallahassee Electric (City of Tallahassee, FL)	Scott Langston		Affirmative	N/A
1	Tennessee Valley Authority	David Plumb		Affirmative	N/A
1	Tri-State G and T Association, Inc.	Donna Wood		Affirmative	N/A
1	U.S. Bureau of Reclamation	Richard Jackson		Affirmative	N/A
1	Unisource - Tucson Electric Power Co.	Jessica Cordero		Negative	Comments Submitted
1	VELCO -Vermont Electric Power Company, Inc.	Randall Buswell		Abstain	N/A
1	Western Area Power Administration	Ben Hammer		Affirmative	N/A
1	Xcel Energy, Inc.	Eric Barry		Negative	Third-Party Comments
2	California ISO	Darcy O'Connell		Abstain	N/A
2	Electric Reliability Council of Texas, Inc.	Kennedy Meier		Abstain	N/A
2	ISO New England, Inc.	John Pearson		Abstain	N/A
2	Midcontinent ISO, Inc.	Kirsten Rowley		Abstain	N/A
2	New York Independent System Operator	Gregory Campoli		None	N/A
2	PJM Interconnection, L.L.C.	Thomas Foster	Elizabeth Davis	Abstain	N/A
2	Southwest Power Pool, Inc. (RTO)	Joshua Phillips		Abstain	N/A
3	AEP	Leshel Hutchings		Negative	Comments Submitted
3	Ameren - Ameren Services	David Jendras Sr	Nick Leathers	Affirmative	N/A

© 2026 - NERC Ver 4.2.1.0 Machine Name: ATLVPEROWEB01

Segment	Organization	Voter	Designated Proxy	Ballot	NERC Memo
3	APS - Arizona Public Service Co.	Jessica Lopez		Affirmative	N/A
3	Arkansas Electric Cooperative Corporation	Ayslynn Mcavoy		None	N/A
3	Associated Electric Cooperative, Inc.	Todd Bennett		Affirmative	N/A
3	Austin Energy	Lovita Griffin		Affirmative	N/A
3	Avista - Avista Corporation	Robert Follini		Affirmative	N/A
3	BC Hydro and Power Authority	Ming Jiang		Abstain	N/A
3	Berkshire Hathaway Energy - MidAmerican Energy Co.	Joseph Amato		Affirmative	N/A
3	Black Hills Corporation	Josh Combs	Carly Miller	Affirmative	N/A
3	Bonneville Power Administration	Ron Sporseen		Negative	Comments Submitted
3	Buckeye Power, Inc.	Tom Schmidt	Ryan Strom	Abstain	N/A
3	Central Electric Power Cooperative (Missouri)	Adam Weber		Affirmative	N/A
3	City Utilities of Springfield, Missouri	Jessica Morrissey		Negative	Third-Party Comments
3	Colorado Springs Utilities	Hillary Dobson		Affirmative	N/A
3	Con Ed - Consolidated Edison Co. of New York	Lincoln Burton		Negative	Third-Party Comments
3	Dominion - Dominion Virginia Power	Victoria Crider		Negative	Comments Submitted
3	Duke Energy - Florida Power Corporation	Marcelo Pesantez		Affirmative	N/A
3	Edison International - Southern California Edison Company	Romel Aquino		Negative	Comments Submitted
3	Entergy	James Keele		Negative	Comments Submitted

© 2026 - NERC Ver 4.2.1.0 Machine Name: ATLVPEROWEB01

Segment	Organization	Voter	Designated Proxy	Ballot	NERC Memo
3	Evergy	Marcus Moor	Alan Kloster	Affirmative	N/A
3	Eversource Energy	Vicki O'Leary		Affirmative	N/A
3	Exelon	Kinte Whitehead		Affirmative	N/A
3	FirstEnergy - FirstEnergy Corporation	Aaron Ghodooshim		Negative	Comments Submitted
3	Georgia System Operations Corporation	Scott McGough		None	N/A
3	Great River Energy	Michael Brytowski		Affirmative	N/A
3	Imperial Irrigation District	George Kirschner	Denise Sanchez	Affirmative	N/A
3	KAMO Electric Cooperative	Tony Gott		Affirmative	N/A
3	Lincoln Electric System	Sam Christensen		Abstain	N/A
3	Los Angeles Department of Water and Power	Fausto Serratos		Abstain	N/A
3	M and A Electric Power Cooperative	Gary Dollins		Affirmative	N/A
3	MEAG Power	Roger Brand	Rebika Yitna	Negative	Comments Submitted
3	MGE Energy - Madison Gas and Electric Co.	Benjamin Widder		Abstain	N/A
3	Muscatine Power and Water	Seth Shoemaker		Abstain	N/A
3	National Grid USA	Brian Shanahan		Negative	Third-Party Comments
3	Nebraska Public Power District	Tony Eddleman		Negative	Comments Submitted
3	New York Power Authority	Richard Machado		Negative	Third-Party Comments
3	NextEra Energy - Florida Power and Light Co.	Karen Demos		Negative	Comments Submitted
3	NiSource - Northern Indiana Public Service Co.	Steven Taddeucci		Negative	Comments Submitted

© 2026 - NERC Ver 4.2.1.0 Machine Name: ATLVPEROWEB01

Segment	Organization	Voter	Designated Proxy	Ballot	NERC Memo
3	Northeast Missouri Electric Power Cooperative	Skyler Wiegmann		Affirmative	N/A
3	Northern California Power Agency	Michael Whitney	Chris Carnesi	None	N/A
3	NW Electric Power Cooperative, Inc.	Heath Henry		Affirmative	N/A
3	OGE Energy - Oklahoma Gas and Electric Co.	Donald Hargrove		Affirmative	N/A
3	Omaha Public Power District	David Heins		Negative	Third-Party Comments
3	Orlando Utilities Commission	Ballard Mutters		None	N/A
3	OTP - Otter Tail Power Company	Wendi Olson		Affirmative	N/A
3	Pacific Gas and Electric Company	Sandra Ellis	Bob Cardle	Negative	Comments Submitted
3	Platte River Power Authority	Richard Kiess		Affirmative	N/A
3	PNM Resources - Public Service Company of New Mexico	Amy Wesselkamper		Negative	Comments Submitted
3	Portland General Electric Co.	Mayra Franco		Negative	Comments Submitted
3	PPL - Louisville Gas and Electric Co.	James Frank		Negative	Comments Submitted
3	PSEG - Public Service Electric and Gas Co.	Christopher Murphy		None	N/A
3	Public Utility District No. 1 of Chelan County	Joyce Gundry		Affirmative	N/A
3	Puget Sound Energy, Inc.	Kelley Sargent		Affirmative	N/A
3	Sacramento Municipal Utility District	Nicole Looney	Tim Kelley	Affirmative	N/A

© 2026 - NERC Ver 4.2.1.0 Machine Name: ATLVPEROWEB01

Segment	Organization	Voter	Designated Proxy	Ballot	NERC Memo
3	Salt River Project	Mathew Weber		Negative	Comments Submitted
3	Santee Cooper	Vicky Budreau		Affirmative	N/A
3	Seminole Electric Cooperative, Inc.	Usama Tahir		None	N/A
3	Sempra - San Diego Gas and Electric	Bryan Bennett		Negative	Third-Party Comments
3	Sho-Me Power Electric Cooperative	Jarrod Murdaugh		Affirmative	N/A
3	Snohomish County PUD No. 1	Holly Chaney		Affirmative	N/A
3	Southern Company - Alabama Power Company	Joel Dembowski		Negative	Comments Submitted
3	Southern Indiana Gas and Electric Co.	Ryan Snyder		Negative	Comments Submitted
3	Tennessee Valley Authority	Ian Grant		Affirmative	N/A
3	Tri-State G and T Association, Inc.	Ryan Walter		Affirmative	N/A
3	TXNM Energy	Scott Thompson		None	N/A
3	Xcel Energy, Inc.	Nicholas Friebel		None	N/A
4	Alliant Energy Corporation Services, Inc.	Larry Heckert		Negative	Third-Party Comments
4	Arkansas Electric Cooperative Corporation	Jenni Sudduth		None	N/A
4	Buckeye Power, Inc.	Jason Procuniar	Ryan Strom	Abstain	N/A
4	City Utilities of Springfield, Missouri	Jerry Bradshaw		Negative	Third-Party Comments
4	FirstEnergy - FirstEnergy Corporation	Mark Garza		Negative	Comments Submitted
4	Georgia System Operations Corporation	Katrina Lyons		Negative	Third-Party Comments

© 2026 - NERC Ver 4.2.1.0 Machine Name: ATLVPEROWEB01

Segment	Organization	Voter	Designated Proxy	Ballot	NERC Memo
4	Northern California Power Agency	Marty Hostler		None	N/A
4	Oklahoma Municipal Power Authority	Michael Watt		Abstain	N/A
4	Public Utility District No. 1 of Snohomish County	John D. Martinsen		Affirmative	N/A
4	Public Utility District No. 2 of Grant County, Washington	Karla Weaver		Abstain	N/A
4	Sacramento Municipal Utility District	Foung Mua	Tim Kelley	Affirmative	N/A
4	Utility Services, Inc.	Carver Powers		Affirmative	N/A
4	WEC Energy Group, Inc.	Candace Morakinyo		None	N/A
4	Western Power Pool	Kevin Conway		Abstain	N/A
5	AEP	Thomas Foltz		Negative	Comments Submitted
5	Ameren - Ameren Missouri	Sam Dwyer		Affirmative	N/A
5	APS - Arizona Public Service Co.	Andrew Smith		Affirmative	N/A
5	Associated Electric Cooperative, Inc.	Chuck Booth		Affirmative	N/A
5	Austin Energy	Michael Dillard		Affirmative	N/A
5	Avista - Avista Corporation	Glen Farmer		Affirmative	N/A
5	BC Hydro and Power Authority	Quincy Wang		Abstain	N/A
5	Berkshire Hathaway - NV Energy	Dwanique Spiller		Affirmative	N/A
5	Black Hills Corporation	Sheila Suurmeier	Carly Miller	Affirmative	N/A
5	Buckeye Power, Inc.	Kevin Zemanek	Ryan Strom	Abstain	N/A

© 2026 - NERC Ver 4.2.1.0 Machine Name: ATLVPEROWEB01

Segment	Organization	Voter	Designated Proxy	Ballot	NERC Memo
5	California Department of Water Resources	ASM Mostafa		None	N/A
5	CMS Energy - Consumers Energy Company	David Greyerbiehl		None	N/A
5	Colorado Springs Utilities	Jeffrey Icke		Affirmative	N/A
5	Con Ed - Consolidated Edison Co. of New York	Michelle Pagano		Negative	Third-Party Comments
5	Constellation	Alison MacKellar		Abstain	N/A
5	Cowlitz County PUD	Deanna Carlson		Abstain	N/A
5	Dairyland Power Cooperative	Tommy Drea		Negative	Third-Party Comments
5	Dominion - Dominion Resources, Inc.	Barbara Marion		Negative	Comments Submitted
5	DTE Energy - Detroit Edison Company	Mohamad Elhusseini		Abstain	N/A
5	Duke Energy	Dale Goodwine		Affirmative	N/A
5	Edison International - Southern California Edison Company	Selene Willis		Negative	Comments Submitted
5	Electric Power Supply Association	Bill Zuretti		None	N/A
5	Entergy - Entergy Services, Inc.	Gail Golden		Negative	Comments Submitted
5	Evergy	Jeremy Harris	Alan Kloster	Affirmative	N/A
5	FirstEnergy - FirstEnergy Corporation	Matthew Augustin		Negative	Comments Submitted
5	Great River Energy	Jacalynn Bentz		Affirmative	N/A
5	Greybeard Compliance Services, LLC	Mike Gabriel		Abstain	N/A
5	Hydro-Quebec (HQ)	Junji Yamaguchi	Chantal Mazza	Affirmative	N/A
5	Imperial Irrigation District	Tino Zaragoza	Denise Sanchez	Affirmative	N/A
5	JEA	John Babik		None	N/A

© 2026 - NERC Ver 4.2.1.0 Machine Name: ATLVPEROWEB01

Segment	Organization	Voter	Designated Proxy	Ballot	NERC Memo
5	Lincoln Electric System	Brittany Millard		Abstain	N/A
5	Los Angeles Department of Water and Power	Robert Kerrigan		Abstain	N/A
5	Lower Colorado River Authority	Teresa Krabe		Affirmative	N/A
5	National Grid USA	Robin Berry		Negative	Third-Party Comments
5	NB Power Corporation - New Brunswick Power Transmission Corporation	Erin Wilson		Negative	Comments Submitted
5	Nebraska Public Power District	Ronald Bender		Negative	Comments Submitted
5	New York Power Authority	Zahid Qayyum		Negative	Third-Party Comments
5	NextEra Energy	Richard Vendetti		Negative	Comments Submitted
5	NiSource - Northern Indiana Public Service Co.	Kathryn Tackett		Negative	Comments Submitted
5	Northern California Power Agency	Jeremy Lawson	Chris Carnesi	None	N/A
5	NRG - NRG Energy, Inc.	Patricia Lynch		Abstain	N/A
5	OGE Energy - Oklahoma Gas and Electric Co.	Patrick Wells		Affirmative	N/A
5	Oglethorpe Power Corporation	Donna Johnson		Negative	Third-Party Comments
5	Oklahoma Municipal Power Authority	Patrick Tuttle		Abstain	N/A
5	Omaha Public Power District	Kayleigh Wilkerson		Negative	Third-Party Comments
5	OTP - Otter Tail Power Company	Stacy Wahlund		Affirmative	N/A
5	Pacific Gas and Electric Company	Tyler Brun	Bob Cardle	Negative	Comments Submitted

© 2026 - NERC Ver 4.2.1.0 Machine Name: ATLVPEROWEB01

Segment	Organization	Voter	Designated Proxy	Ballot	NERC Memo
5	Platte River Power Authority	Jon Osell		Affirmative	N/A
5	Portland General Electric Co.	Ryan Olson		Negative	Comments Submitted
5	PPL - Louisville Gas and Electric Co.	Julie Hostrander		Negative	Comments Submitted
5	PSEG Nuclear LLC	Tim Kucey		None	N/A
5	Public Utility District No. 1 of Chelan County	Rebecca Wickel		Affirmative	N/A
5	Public Utility District No. 1 of Snohomish County	Becky Burden		Affirmative	N/A
5	Sacramento Municipal Utility District	Ryder Couch	Tim Kelley	Affirmative	N/A
5	Salt River Project	Thomas Johnson		Negative	Comments Submitted
5	Santee Cooper	Carey Salisbury		Affirmative	N/A
5	Seminole Electric Cooperative, Inc.	Melanie Wong		None	N/A
5	Sempra - San Diego Gas and Electric	Jennifer Wright		Negative	Third-Party Comments
5	Southern Company - Southern Company Generation	Leslie Burke		Negative	Comments Submitted
5	Southern Indiana Gas and Electric Co.	Larry Rogers		Negative	Comments Submitted
5	Tennessee Valley Authority	Darren Boehm		Affirmative	N/A
5	Tri-State G and T Association, Inc.	Sergio Banuelos		Affirmative	N/A
5	U.S. Bureau of Reclamation	Wendy Kalidass		Affirmative	N/A
5	Xcel Energy, Inc.	Gerry Huitt		Negative	Third-Party Comments

© 2026 - NERC Ver 4.2.1.0 Machine Name: ATLVPEROWEB01

Segment	Organization	Voter	Designated Proxy	Ballot	NERC Memo
6	AEP	Mathew Miller		Negative	Comments Submitted
6	Ameren - Ameren Services	Robert Quinlivan		Affirmative	N/A
6	APS - Arizona Public Service Co.	Marcus Bortman		Affirmative	N/A
6	Arkansas Electric Cooperative Corporation	Bruce Walkup		Abstain	N/A
6	Associated Electric Cooperative, Inc.	Brian Ackermann		Affirmative	N/A
6	Austin Energy	Imane Mrini		Affirmative	N/A
6	Berkshire Hathaway - PacifiCorp	Lindsay Wickizer		None	N/A
6	Black Hills Corporation	Rachel Schuldt		Affirmative	N/A
6	Bonneville Power Administration	Tanner Brier		Negative	Comments Submitted
6	Cleco Corporation	Robert Hirchak	Clay Walker	Affirmative	N/A
6	Con Ed - Consolidated Edison Co. of New York	Jason Chandler		Negative	Third-Party Comments
6	Constellation	Kimberly Turco		Abstain	N/A
6	Dominion - Dominion Resources, Inc.	Sean Bodkin		Negative	Comments Submitted
6	Duke Energy	John Sturgeon		Affirmative	N/A
6	Edison International - Southern California Edison Company	Stephanie Kenny		Negative	Comments Submitted
6	Entergy	Julie Hall		Negative	Comments Submitted
6	Evergy	Tiffany Lake	Alan Kloster	Affirmative	N/A
6	FirstEnergy - FirstEnergy Corporation	Stacey Sheehan		Negative	Comments Submitted
6	Great River Energy	Brian Meloy		None	N/A

© 2026 - NERC Ver 4.2.1.0 Machine Name: ATLVPEROWEB01

Segment	Organization	Voter	Designated Proxy	Ballot	NERC Memo
6	Imperial Irrigation District	Diana Torres	Denise Sanchez	Affirmative	N/A
6	Lincoln Electric System	Eric Ruskamp		Abstain	N/A
6	Los Angeles Department of Water and Power	Anton Vu		Abstain	N/A
6	Muscatine Power and Water	Nicholas Burns		None	N/A
6	New York Power Authority	Shelly Dineen		Negative	Third-Party Comments
6	NextEra Energy - Florida Power and Light Co.	Justin Welty		Negative	Comments Submitted
6	NiSource - Northern Indiana Public Service Co.	Rebecca Blair		Negative	Comments Submitted
6	Northern California Power Agency	Dennis Sismaet	Chris Carnesi	None	N/A
6	OGE Energy - Oklahoma Gas and Electric Co.	Ashley F Stringer		Affirmative	N/A
6	Omaha Public Power District	Shonda Markus		Negative	Third-Party Comments
6	Platte River Power Authority	Sabrina Martz		Affirmative	N/A
6	Portland General Electric Co.	Stefanie Burke		Negative	Comments Submitted
6	Powerex Corporation	Raj Hundal		Abstain	N/A
6	PPL - Louisville Gas and Electric Co.	Linn Oelker		Negative	Comments Submitted
6	PSEG - PSEG Energy Resources and Trade LLC	Laura Wu		None	N/A
6	Public Utility District No. 1 of Chelan County	Tamarra Hardie		Affirmative	N/A
6	Sacramento Municipal Utility District	Charles Norton	Tim Kelley	Affirmative	N/A
6	Salt River Project	Timothy Singh		Negative	Comments Submitted

© 2026 - NERC Ver 4.2.1.0 Machine Name: ATLVPEROWEB01

Segment	Organization	Voter	Designated Proxy	Ballot	NERC Memo
6	Santee Cooper	Marty Watson		Affirmative	N/A
6	Seminole Electric Cooperative, Inc.	Bret Galbraith		None	N/A
6	Snohomish County PUD No. 1	John Liang		Affirmative	N/A
6	Southern Company - Southern Company Generation and Energy Marketing	Matthew O'neal		Negative	Comments Submitted
6	Southern Indiana Gas and Electric Co.	Kati Barr		Negative	Comments Submitted
6	Tennessee Valley Authority	Jeffrey Powell		Affirmative	N/A
6	Western Area Power Administration	Jennifer Neville		Affirmative	N/A
6	Xcel Energy, Inc.	Steve Szablya		None	N/A
10	Midwest Reliability Organization	Mark Flanary		Affirmative	N/A
10	New York State Reliability Council	Wesley Yeomans		Affirmative	N/A
10	Northeast Power Coordinating Council	Gerry Dunbar		Abstain	N/A
10	ReliabilityFirst	Tremayne Brown		Affirmative	N/A
10	SERC Reliability Corporation	Dave Krueger		Affirmative	N/A
10	Texas Reliability Entity, Inc.	Rachel Coyne		Abstain	N/A
10	Western Electricity Coordinating Council	Steven Rueckert		Abstain	N/A

Previous 1 Next

Showing 1 to 289 of 289 entries

© 2026 - NERC Ver 4.2.1.0 Machine Name: ATLVPEROWEB01

© 2026 - NERC Ver 4.2.1.0 Machine Name: ATLVPEROWEB01

NERC
NORTH AMERICAN ELECTRIC RELIABILITY CORPORATION

Unofficial Comment Form

Project 2023-06 CIP-014 Risk Assessment Refinement

Be aware that this is a public proceeding, and comments are publicly available upon submission. DO NOT include any CEII or otherwise sensitive information in your comments.

Do not use this form for submitting comments. Use the Standards Balloting and Commenting System (SBS) to submit comments on **Project 2023-06 Risk Assessment Refinement** by **8 p.m. Eastern, Wednesday, November 6, 2024.**

Additional information is available on the project page. If you have questions, contact Senior Standards Developer, Ben Wu (via email), or at 470-542-6882.

Background Information

Due to an increase in reports of physical attacks on electric substations, the Federal Energy Regulatory Commission (FERC) issued the December 2022 Order in Docket No. RD23-2-000 directing NERC to evaluate the effectiveness of the Physical Security Reliability Standard CIP-014-3 in mitigating the risks to the Bulk-Power System (BPS) associated with physical attacks. In the report filed in response to a FERC directive, NERC staff identified continuing inconsistency in registered entity CIP-014-3 risk assessments to most appropriately identify critical infrastructure. FERC directed NERC to evaluate whether the physical security protection requirements in NERC's Reliability Standards are adequate to address the risks associated with physical attacks on BPS Facilities, including the adequacy of the required risk assessment in CIP-014-3 Requirement R1. In the report, NERC found that CIP-014-3 required revision to assure adequate and consistent approach in evaluating instability as well as the identification of infrastructure critical to the operation of the BPS.

Questions

1. Do you agree with the modifications made in CIP-014-4 with modified Requirement R1 to address the issues identified in the SAR?

   ☐ Yes
   ☐ No

   Comments:

2. Do you agree with the modifications made in CIP-014-4 with new Requirement R2 to address the issues identified in the SAR?

   ☐ Yes
   ☐ No

   Comments:

3. Do you agree with the modifications made in CIP-014-4 with new Requirement R3 to address the issues identified in the SAR?

   ☐ Yes
   ☐ No

   Comments:

4. Do you agree with the modifications made in CIP-014-4 with new Requirement R4 to address the issues identified in the SAR?

   ☐ Yes
   ☐ No

   Comments:

5. Do you agree with the modifications made in CIP-014-4 with adding Requirement R5 to address the issues identified in the SAR?

   ☐ Yes
   ☐ No

   Comments:

6. Do you agree with the Implementation Plan for CIP-014-4?

   ☐ Yes
   ☐ No

   Comments:

7. Do you agree that CIP-014-4 is cost effective to address the reliability issue of physical security? If no, why not?

   ☐ Yes
   ☐ No

   Comments:

8. Provide any additional comments for the standard drafting team to consider, if desired.

   Comments:

NERC
NORTH AMERICAN ELECTRIC RELIABILITY CORPORATION

Standards Announcement

Project 2023-06 CIP-014 Risk Assessment Refinement

Be aware that this is a public proceeding, and comments are publicly available upon submission. DO NOT include any CEII or otherwise sensitive information in your comments.

Formal Comment Period Open through November 6, 2024

Now Available

A 45-day formal comment period for **Project 2023-06 CIP-014 Risk Assessment Refinement** is open through **8 p.m. Eastern, Wednesday, November 6, 2024** for the following standard and implementation plan:

- CIP-014-4 – Physical Security
- Implementation Plan

The standard drafting team's considerations of the responses received from the previous comment period are reflected in this draft of the standard.

Reminder Regarding Corporate RBB Memberships

Under the NERC Rules of Procedure, each entity and its affiliates is collectively permitted one voting membership per Registered Ballot Body Segment. Each entity that undergoes a change in corporate structure (such as a merger or acquisition) that results in the entity or affiliated entities having more than the one permitted representative in a particular Segment must withdraw the duplicate membership(s) prior to joining new ballot pools or voting on anything as part of an existing ballot pool. Contact ballotadmin@nerc.net to assist with the removal of any duplicate registrations.

Commenting

Use the Standards Balloting and Commenting System (SBS) to submit comments. An unofficial Word version of the comment form is posted on the project page.

- *Contact NERC IT support directly at https://support.nerc.net/ (Monday – Friday, 8 a.m. - 5 p.m. Eastern) for problems regarding accessing the SBS due to a forgotten password, incorrect credential error messages, or system lock-out.*
- *Passwords expire every **6 months** and must be reset.*
- *The SBS **is not** supported for use on mobile devices.*
- *Please be mindful of ballot and comment period closing dates. We ask to **allow at least 48 hours** for NERC support staff to assist with inquiries. Therefore, it is recommended that users try logging into their SBS accounts **prior to the last day** of a comment/ballot period.*

Next Steps

Additional ballots for the standard and implementation plan, as well as the non-binding poll of the associated Violation Risk Factors and Violation Severity Levels will be conducted **October 28 – November 6, 2024**.

For information on the Standards Development Process, refer to the Standard Processes Manual.

For more information or assistance, contact Senior Standards Developer**,** Ben Wu (via email) or at 470-542-6882. Subscribe to this project's observer mailing list by selecting "NERC Email Distribution Lists" from the "Service" drop-down menu and specify “Project 2023-06 CIP-014 Risk Assessment Refinement observer list” in the Description Box.



North American Electric Reliability Corporation
3353 Peachtree Rd, NE
Suite 600, North Tower
Atlanta, GA 30326
404-446-2560 | www.nerc.com

Comment Report

Project Name:	2023-06 CIP-014 Risk Assessment Refinement | Draft 2
Comment Period Start Date:	9/23/2024
Comment Period End Date:	11/6/2024
Associated Ballots:	Project 2023-06 CIP-014 Risk Assessment Refinement CIP-014-4 AB 2 ST Project 2023-06 CIP-014 Risk Assessment Refinement Implementation Plan AB 2 OT

There were 64 sets of responses, including comments from approximately 135 different people from approximately 80 companies representing 10 of the Industry Segments as shown in the table on the following pages.

Questions

1. Do you agree with the modifications made in CIP-014-4 with modified Requirement R1 to address the issues identified in the SAR?

2. Do you agree with the modifications made in CIP-014-4 with new Requirement R2 to address the issues identified in the SAR?

3. Do you agree with the modifications made in CIP-014-4 with new Requirement R3 to address the issues identified in the SAR?

4. Do you agree with the modifications made in CIP-014-4 with new Requirement R4 to address the issues identified in the SAR?

5. Do you agree with the modifications made in CIP-014-4 with adding Requirement R5 to address the issues identified in the SAR?

6. Do you agree with the Implementation Plan for CIP-014-4?

7. Do you agree that CIP-014-4 is cost effective to address the reliability issue of physical security? If no, why not?

8. Provide any additional comments for the standard drafting team to consider, if desired.

Organization Name	Name	Segment(s)	Region	Group Name	Group Member Name	Group Member Organization	Group Member Segment(s)	Group Member Region
Tennessee Valley Authority	Brian Millard	1,3,5,6	SERC	TVA RBB	Ian Grant	Tennessee Valley Authority	3	SERC
					David Plumb	Tennessee Valley Authority	1	SERC
					Armando Rodriguez	Tennessee Valley Authority	6	SERC
					Nehtisha Rollis	Tennessee Valley Authority	5	SERC
Jennie Wike	Jennie Wike		WECC	Tacoma Power	Jennie Wike	Tacoma Public Utilities	1,3,4,5,6	WECC
					John Merrell	Tacoma Public Utilities (Tacoma, WA)	1	WECC
					John Nierenberg	Tacoma Public Utilities (Tacoma, WA)	3	WECC
					Hien Ho	Tacoma Public Utilities (Tacoma, WA)	4	WECC
					Terry Gifford	Tacoma Public Utilities (Tacoma, WA)	6	WECC
					Ozan Ferrin	Tacoma Public Utilities (Tacoma, WA)	5	WECC
ACES Power Marketing	Jodirah Green	1,3,4,5,6	MRO,NPCC,RF,SERC,Texas RE,WECC	ACES Collaborators	Bob Soloman	Hoosier Energy Electric Cooperative	1	RF
					Kevin Lyons	Central Iowa Power Cooperative	1	MRO

					Kylee Kropp	Sunflower Electric Power Corporation	1	MRO
					Nick Fogleman	Prairie Power, Inc.	1,3	SERC
Eversource Energy	Joshua London	1		Eversource	Joshua London	Eversource Energy	1	NPCC
					Vicki O'Leary	Eversource Energy	3	NPCC
FirstEnergy - FirstEnergy Corporation	Mark Garza	4		FE Voter	Julie Severino	FirstEnergy - FirstEnergy Corporation	1	RF
					Aaron Ghodooshim	FirstEnergy - FirstEnergy Corporation	3	RF
					Robert Loy	FirstEnergy - FirstEnergy Solutions	5	RF
					Mark Garza	FirstEnergy- FirstEnergy	1,3,4,5,6	RF
					Stacey Sheehan	FirstEnergy - FirstEnergy Corporation	6	RF
Black Hills Corporation	Rachel Schuldt	6		Black Hills Corporation - All Segments	Travis Grablander	Black Hills Corporation	1	WECC
					Josh Combs	Black Hills Corporation	3	WECC
					Rachel Schuldt	Black Hills Corporation	6	WECC
					Carly Miller	Black Hills Corporation	5	WECC
					Sheila Suurmeier	Black Hills Corporation	5	WECC
Northeast Power Coordinating Council	Ruida Shu	1,2,3,4,5,6,7,8,9,10	NPCC	NPCC RSC	Gerry Dunbar	Northeast Power Coordinating Council	10	NPCC
					Deidre Altobell	Con Edison	1	NPCC
					Michele Tondalo	United Illuminating Co.	1	NPCC
					Stephanie Ullah-Mazzuca	Orange and Rockland	1	NPCC

Michael Ridolfino	Central Hudson Gas & Electric Corp.	1	NPCC
Randy Buswell	Vermont Electric Power Company	1	NPCC
James Grant	NYISO	2	NPCC
Dermot Smyth	Con Ed - Consolidated Edison Co. of New York	1	NPCC
David Burke	Orange and Rockland	3	NPCC
Peter Yost	Con Ed - Consolidated Edison Co. of New York	3	NPCC
Salvatore Spagnolo	New York Power Authority	1	NPCC
Sean Bodkin	Dominion - Dominion Resources, Inc.	6	NPCC
David Kwan	Ontario Power Generation	4	NPCC
Silvia Mitchell	NextEra Energy - Florida Power and Light Co.	1	NPCC
Sean Cavote	PSEG	4	NPCC
Jason Chandler	Con Edison	5	NPCC
Tracy MacNicoll	Utility Services	5	NPCC
Shivaz Chopra	New York Power Authority	6	NPCC
Vijay Puran	New York State Department of Public Service	6	NPCC

					David Kiguel	Independent	7	NPCC
					Joel Charlebois	AESI	7	NPCC
					Joshua London	Eversource Energy	1	NPCC
					Jeffrey Streifling	NB Power Corporation	1,4,10	NPCC
					Joel Charlebois	AESI	7	NPCC
					John Hastings	National Grid	1	NPCC
					Erin Wilson	NB Power	1	NPCC
					James Grant	NYISO	2	NPCC
					Michael Couchesne	ISO-NE	2	NPCC
					Kurtis Chong	IESO	2	NPCC
					Michele Pagano	Con Edison	4	NPCC
					Bendong Sun	Bruce Power	4	NPCC
					Carvers Powers	Utility Services	5	NPCC
					Wes Yeomans	NYSRC	7	NPCC
					Chantal Mazza	Hydro Quebec	1	NPCC
					Nicolas Turcotte	Hydro Quebec	2	NPCC
Dominion - Dominion Resources, Inc.	Sean Bodkin	6		Dominion	Victoria Crider	Dominion Energy	3	NA - Not Applicable
					Sean Bodkin	Dominion Energy	6	NA - Not Applicable
					Steven Belle	Dominion Energy	1	NA - Not Applicable
					Barbara Marion	Dominion Energy	5	NA - Not Applicable
Public Utility District No. 1 of Chelan County	Tamarra Hardie	6		CHPD	Joyce Gundry	Public Utility District No. 1 of Chelan County	3	WECC
					Rebecca Zahler	Public Utility District No. 1 of Chelan County	5	WECC

					Diane Landry	Public Utility District No. 1 of Chelan County	1	WECC
Tim Kelley	Tim Kelley		WECC	SMUD and BANC	Nicole Looney	Sacramento Municipal Utility District	3	WECC
					Charles Norton	Sacramento Municipal Utility District	6	WECC
					Wei Shao	Sacramento Municipal Utility District	1	WECC
					Foung Mua	Sacramento Municipal Utility District	4	WECC
					Nicole Goi	Sacramento Municipal Utility District	5	WECC
					Kevin Smith	Balancing Authority of Northern California	1	WECC

1. Do you agree with the modifications made in CIP-014-4 with modified Requirement R1 to address the issues identified in the SAR?

Kevin Conway - Western Power Pool - 4

Answer	No
Document Name	

Comment

There is a disconnect between the listed responsibility in the Applicability Section 4.1 and R1. Does the Drafting team expect ALL TOPs to comply to R1, or ONLY those who have facilities that meet the criteria of Attachment 1? There is a high likelihood that auditors will interpret that ALL TOPs will have to complete R1 and show that they scored their facilities to determine applicability under Attachment 1.

We suggest that the applicability section include ALL TOPs, and the requirements be modified to have all TOPs complete R1, then if they have not met the criteria of Attachment 1, they stop and have no additional compliance obligation. This would more clearly identify who is applicable to the Standard and eliminate a lot of ambiguity of what the auditors will need to verify that an entity is not applicable to the standard.

Likes 0	
Dislikes 0	

Response

Tamarra Hardie - Tamarra Hardie On Behalf of: Diane E Landry, Public Utility District No. 1 of Chelan County, 3, 5, 1, 6; - Public Utility District No. 1 of Chelan County - 6, Group Name CHPD

Answer	No
Document Name	Near-Term vs Long-Term - Glossary of Terms.docx

Comment

It appears that the Draft 2 changes to R1 clarified that the list is to be documented once every 36 months for all applicable stations “that are existing or planned to be in service within 36 months”, which is an improvement from the previous draft version. This improves clarity but the R1 VRF Time Horizon still states that R1 applies to ‘Long-term Planning Horizon’, whereas the NERC Glossary of Terms defines the ‘Near-Term Planning Horizon’ as the window covering year 1 through 5. This requirement references ‘within 36 months’, so it is recommended that the R1 VRF Time Horizon language is updated to reference the ‘Near-Term Transmission Planning Horizon’. Please see attached document “Near-Term vs Long-Term - Glossary of Terms”.

Likes 0	
Dislikes 0	

Response

Joshua London - Eversource Energy - 1, Group Name Eversource

Answer	No
Document Name	

Comment
Eversource is looking for clarity on what is meant by the phrase “Planned to be in service.” Eversource suggests either providing more prescriptive language around at what point in the process a project is considered “planned,” or make the following change: Each Transmission Owner, at least once every 36 calendar months, shall document a list of applicable Transmission station(s) and Transmission substation(s) meeting any of the criteria in Attachment 1 that are either existing or planned, **as defined by the Transmission Owner,** to be in service within 36 calendar months**.**

Likes 0	
Dislikes 0	

Response

Ronald Hoover - Bonneville Power Administration - 1,3,5,6 - WECC	
Answer	No
Document Name	

Comment
BPA believes the current language of R1 seems to be intended to create auditable documentation of the same outcome that is already achieved when a Registered Entity evaluates the current Applicability section. BPA suggests restoring applicability content to the Applicability section and changing R1 language for applicable Registered Entities to maintain the list of applicable stations or substations obtained through evaluation of the Applicability section.

Likes 0	
Dislikes 0	

Response

Nikki Carson-Marquis - Nikki Carson-Marquis On Behalf of: Theresa Allard, Minnkota Power Cooperative Inc., 1; - Nikki Carson-Marquis	
Answer	No
Document Name	

Comment
MPC strongly disagrees with the use of a 36-month timeframe for utilities who have not previously identified stations or substations as critical for the same reasons specified in our comments for Question 5.

Likes 0	
Dislikes 0	

Response

Chantal Mazza - Chantal Mazza On Behalf of: Junji Yamaguchi, Hydro-Quebec (HQ), 1, 5; Nicolas Turcotte, Hydro-Quebec (HQ), 1, 5; - Chantal Mazza	
Answer	No
Document Name	
Comment	

The NPCC RSC is looking for clarity on what is meant by the phrase “Planned to be in service.”

The NPCC RSC suggests either providing more prescriptive language around how a project is considered “planned,” or make the following change:

Each Transmission Owner, at least once every 36 calendar months, shall document a list of applicable Transmission station(s) and Transmission substation(s) meeting any of the criteria in Attachment 1 that are either existing or planned, **as defined by the Transmission Owner,** to be in service within 36 calendar months.

Likes 0	
Dislikes 0	
Response	
Lucinda Bradshaw - Lucinda Bradshaw On Behalf of: Byron Booker, Oncor Electric Delivery, 1; - Lucinda Bradshaw	
Answer	No
Document Name	
Comment	

Oncor does not agree with the provision requiring consideration of Transmission station(s) and Transmission substation(s) that are planned to be in service within 36 calendar months because that time frame is beyond Oncor’s accurate planning time frame, particularly given the large amount of growth currently being experienced in Oncor’s service area. Instead, Oncor recommends that the provision be revised to require consideration of Transmission station(s) and Transmission substation(s) that are planned to be in service within 24 months.

Likes 0	
Dislikes 0	
Response	
Jamison Cawley - Nebraska Public Power District - 1	
Answer	No
Document Name	
Comment	

Please see the comments in our responses to Questions 2 through 8 of this questionnaire.

Likes 0	
Dislikes 0	

Response

Jennifer Mcnally - Duke Energy - 1,3,5,6 - Texas RE,SERC,RF

Answer	No
Document Name	

Comment

Duke Energy still has concerns that the timeline for the performance of R1 is not clear. We recommend that the assessment be performed within 36 months of *the completion* of the previous R1 assessment. We also recommend the end of R1 specify “planned to be in service in the model year three years out from the year in which the assessment is performed”. Years capture more accurately how planning is conducted. As written in draft 2, if the assessment is performed in October 2024, will using a planning model from Summer 2027 be acceptable? With the current language using 36 months, we have concerns that it would not be.

If the drafting team is not willing to consider referencing years for modeling, we recommend that they consider clarifying with a footnote that for planning purposes, the model year should be at least three years out from the start of the assessment.

Likes 0	
Dislikes 0	

Response

Ellese Murphy - Ellese Murphy On Behalf of: Katherine Street, Duke Energy , 5, 6, 1, 1; - Ellese Murphy

Answer	No
Document Name	

Comment

Duke Energy still has concerns that the timeline for the performance of R1 is not clear. We recommend that the assessment be performed within 36 months of *the completion* of the previous R1 assessment. We also recommend the end of R1 specify “planned to be in service in the model year three years out from the year in which the assessment is performed”. Years capture more accurately how planning is conducted. As written in draft 2, if the assessment is performed in October 2024, will using a planning model from Summer 2027 be acceptable? With the current language using 36 months, we have concerns that it would not be.

If the drafting team is not willing to consider referencing years for modeling, we recommend that they consider clarifying with a footnote that for planning purposes, the model year should be at least three years out from the start of the assessment.

Likes 0	
Dislikes 0	

Response

Kelley Sargent - Puget Sound Energy, Inc. - 3

Answer	No
Document Name	

Comment

We agree with the intent of CIP-014-4 to address issues identified in the SAR, however we would like to suggest changes to improve readability.

There is some interplay between R1 and R2 through Attachment 1 that makes identification of “applicable” stations confusing. R1 refers to Attachment 1 to identify “applicable” stations based on the weighting criteria in Table 1. Attachment 1 section 2.1 requires user to refer to R2 and apply proximity criteria to stations that were not applicable in R1.

To meet the intent of SAR to identify station “groups” that meet applicability criteria of Attachment 1, it may be best to identify station groups separately under R2 as a sub-requirement (i.e. move Section 2.1 from Attachment 1 to sub-requirement R2.2) and make Attachment 1 agnostic of stations or station groups. This separates intent of R1 and R2 and allows both requirements to reference Attachment 1 applicability criteria. R1 will identify individual stations that meet Attachment 1 applicability criteria. R2 will identify station groups with stations that were individually non-applicable under R1, but when combined with other non-applicable station(s) - based on proximity criteria of R2, may be applicable per Attachment 1 Table 1.

Likes 0	
Dislikes 0	

Response

Israel Perez - Israel Perez On Behalf of: Laura Somak, Salt River Project, 3, 6, 5, 1; Mathew Weber, Salt River Project, 3, 6, 5, 1; Thomas Johnson, Salt River Project, 3, 6, 5, 1; Timothy Singh, Salt River Project, 3, 6, 5, 1; - Israel Perez

Answer	No
Document Name	

Comment

Salt River Project (SRP) agrees with EEI’s suggestion to remove the word “proximity” from R3 to avoid using a term that is undefined in R2 and the comment that R3 Part 3.1.1 duplicates the concepts in R3 Part 3.1.

Likes 0	
Dislikes 0	

Response

Bob Cardle - Bob Cardle On Behalf of: Marco Rios, Pacific Gas and Electric Company, 3, 1, 5; Sandra Ellis, Pacific Gas and Electric Company, 3, 1, 5; Tyler Brun, Pacific Gas and Electric Company, 3, 1, 5; - Bob Cardle

Answer	No
Document Name	

Comment

The CIP-014-4 standard introduces a significant change by requiring the inclusion of stations within a 1/2-mile line of sight or easily accessible from a common roadway. However, the standard lacks clear guidelines for selecting stations. This could lead to inconsistencies and challenges in implementation, as different Transmission Owners and Transmission Operators may interpret and apply the criteria differently.

To improve clarity and ensure consistent implementation, the standard should provide more detailed guidance on the selection of stations, including specific criteria for evaluating lines of sight and ease of access from common roadways. This would help Transmission Owners and Transmission Operators to better understand the requirements and apply them consistently, ensuring the reliability and security of the electrical grid.

Likes 0	
Dislikes 0	

Response

Sean Bodkin - Dominion - Dominion Resources, Inc. - 6, Group Name Dominion

Answer	No
Document Name	

Comment

The proposed 36 months for the period is not realistic as it is beyond a planning timeframe that would produce meaningful results. Limiting the period to 24 months accounts for issues such as supply chain, construction constraints, and outage planning to maintain a reliable system.

Likes 0	
Dislikes 0	

Response

Leshel Hutchings - AEP - 3

Answer	Yes
Document Name	

Comment

None

Likes 0	
Dislikes 0	

Response

Mark Garza - FirstEnergy - FirstEnergy Corporation - 4, Group Name FE Voter

Answer	Yes
Document Name	

Comment

FirstEnergy has no concerns with the proposed R1 for CIP-014-4.

Likes 0	
Dislikes 0	

Response

Gary Trezza - Long Island Power Authority - 1 - NPCC

Answer	Yes
Document Name	

Comment

a) From a compliance perspective, it is recommended to provide more prescriptive language in the standard or within the technical rationale, to help entities in identifying planned projects around how a project is considered “planned,” or make the following change:

Each Transmission Owner, at least once every 36 calendar months, shall document a list of applicable Transmission station(s) and Transmission substation(s) meeting any of the criteria in Attachment 1 that are either existing or planned, **as defined by the Transmission Owner**, to be in service within 36 calendar months

b) With respect to the scoring in Attachment one, it’s unclear if transmission lines in series with a stepdown transformer would be included if the secondary voltage was 138 kV (as one example). Could the SDT identify if the scoring is based on the high side voltage or low side voltage? LIPA suggests a footnote identifying the voltage class used to determine qualification should be added below the scoring table.

c) In addition, since 500 kV facilities meet the Attachment 1 criteria 1, it seems as though the line item in the table for 500 kV and above may be removed as to avoid confusion.

Likes 0	
Dislikes 0	

Response

Ruida Shu - Northeast Power Coordinating Council - 1,2,3,4,5,6,7,8,9,10 - NPCC, Group Name NPCC RSC

Answer	Yes
Document Name	
Comment	

The NPCC RSC is looking for clarity on what is meant by the phrase “Planned to be in service.”

The NPCC RSC suggests either providing more prescriptive language around how a project is considered “planned,” or make the following change:

Each Transmission Owner, at least once every 36 calendar months, shall document a list of applicable Transmission station(s) and Transmission substation(s) meeting any of the criteria in Attachment 1 that are either existing or planned, **as defined by the Transmission Owner,** to be in service within 36 calendar months.

Likes 0	
Dislikes 0	
Response	

Clay Walker - Clay Walker On Behalf of: Robert Hirchak, Cleco Corporation, 6, 5, 1, 3; - Clay Walker

Answer	Yes
Document Name	
Comment	

Cleco agrees with EEI comments.

Likes 0	
Dislikes 0	
Response	

Daniel Gacek - Exelon - 1

Answer	Yes
Document Name	
Comment	

Submitted on behalf of Exelon - Segments 1 & 3

Likes 0	
Dislikes 0	
Response	

Kristine Martz - Edison Electric Institute - NA - Not Applicable - NA - Not Applicable	
Answer	Yes
Document Name	
Comment	
EEI agrees with the modifications made in CIP-014-4 R1.	
Likes 0	
Dislikes 0	
Response	

Dwanique Spiller - Berkshire Hathaway - NV Energy - 5	
Answer	Yes
Document Name	
Comment	
NV Energy appreciates this revision from the previous draft which maintains overall continuity with previous versions of the standard.	
Likes 0	
Dislikes 0	
Response	

TRACEY JOHNSON - Southern Indiana Gas and Electric Co. - 3,5,6 - RF	
Answer	Yes
Document Name	
Comment	
Southern Indiana Gas and Electric Company d/b/a CenterPoint Energy Indiana South (SIGE) supports the comments as submitted by Edison Electric Institute (EEI).	
Likes 0	
Dislikes 0	
Response	

Robert Blackney - Edison International - Southern California Edison Company - 1	
Answer	Yes

Document Name	
Comment	
See comments submitted by EEI.	
Likes 0	
Dislikes 0	
Response	
Selene Willis - Edison International - Southern California Edison Company - 5	
Answer	Yes
Document Name	
Comment	
See EEI Comments	
Likes 0	
Dislikes 0	
Response	
Brian Millard - Tennessee Valley Authority - 1,3,5,6 - SERC, Group Name TVA RBB	
Answer	Yes
Document Name	
Comment	
Likes 0	
Dislikes 0	
Response	
Erin Wilson - NB Power Corporation - New Brunswick Power Transmission Corporation - 5	
Answer	Yes
Document Name	
Comment	

Likes 0	
Dislikes 0	
Response	
Jeffrey Streifling - NB Power Corporation - 1	
Answer	Yes
Document Name	
Comment	
Likes 0	
Dislikes 0	
Response	
Mark Flanary - Midwest Reliability Organization - 10	
Answer	Yes
Document Name	
Comment	
Likes 0	
Dislikes 0	
Response	
Matthew Nicklin - Southern Illinois Power Cooperative - 1,3,5 - SERC	
Answer	Yes
Document Name	
Comment	
Likes 0	
Dislikes 0	
Response	
James Keele - Entergy - 3	

Answer	Yes
Document Name	
Comment	
Likes 0	
Dislikes 0	
Response	
Ben Hammer - Western Area Power Administration - 1	
Answer	Yes
Document Name	
Comment	
Likes 0	
Dislikes 0	
Response	
Rebika Yitna - Rebika Yitna On Behalf of: Roger Brand, MEAG Power, 3, 1; - Rebika Yitna	
Answer	Yes
Document Name	
Comment	
Likes 0	
Dislikes 0	
Response	
Donna Wood - Tri-State G and T Association, Inc. - 1	
Answer	Yes
Document Name	
Comment	
Likes 0	

Dislikes 0	
Response	
Devin Shines - PPL - Louisville Gas and Electric Co. - 1,3,5,6 - SERC,RF	
Answer	Yes
Document Name	
Comment	
Likes 0	
Dislikes 0	
Response	
Sean Steffensen - IDACORP - Idaho Power Company - 1	
Answer	Yes
Document Name	
Comment	
Likes 0	
Dislikes 0	
Response	
Richard Jackson - U.S. Bureau of Reclamation - 1	
Answer	Yes
Document Name	
Comment	
Likes 0	
Dislikes 0	
Response	
Matt Carden - Southern Company - Southern Company Services, Inc. - 1	
Answer	Yes

Document Name	
Comment	
Likes 0	
Dislikes 0	
Response	
Amy Wesselkamper - PNM Resources - Public Service Company of New Mexico - 3	
Answer	Yes
Document Name	
Comment	
Likes 0	
Dislikes 0	
Response	
Jessica Cordero - Unisource - Tucson Electric Power Co. - 1	
Answer	Yes
Document Name	
Comment	
Likes 0	
Dislikes 0	
Response	
Carver Powers - Utility Services, Inc. - 4	
Answer	Yes
Document Name	
Comment	
Likes 0	
Dislikes 0	

Response	
Stephen Stafford - Stephen Stafford On Behalf of: Greg Davis, Georgia Transmission Corporation, 1; - Stephen Stafford	
Answer	Yes
Document Name	
Comment	
Likes 0	
Dislikes 0	
Response	
Tim Kelley - Tim Kelley On Behalf of: Charles Norton, Sacramento Municipal Utility District, 3, 6, 4, 1, 5; Foung Mua, Sacramento Municipal Utility District, 3, 6, 4, 1, 5; Kevin Smith, Balancing Authority of Northern California, 1; Nicole Looney, Sacramento Municipal Utility District, 3, 6, 4, 1, 5; Ryder Couch, Sacramento Municipal Utility District, 3, 6, 4, 1, 5; Wei Shao, Sacramento Municipal Utility District, 3, 6, 4, 1, 5; - Tim Kelley, Group Name SMUD and BANC	
Answer	Yes
Document Name	
Comment	
Likes 0	
Dislikes 0	
Response	
Diana Aguas - CenterPoint Energy Houston Electric, LLC - 1 - Texas RE	
Answer	Yes
Document Name	
Comment	
Likes 0	
Dislikes 0	
Response	
Andrew Smith - APS - Arizona Public Service Co. - 5	

Answer	Yes
Document Name	
Comment	
Likes 0	
Dislikes 0	
Response	
Robert Jones - Seattle City Light - 4	
Answer	Yes
Document Name	
Comment	
Likes 0	
Dislikes 0	
Response	
Jennie Wike - Jennie Wike On Behalf of: John Merrell, Tacoma Public Utilities (Tacoma, WA), 1, 4, 5, 6, 3; - Jennie Wike, Group Name Tacoma Power	
Answer	Yes
Document Name	
Comment	
Likes 0	
Dislikes 0	
Response	
Dave Krueger - SERC Reliability Corporation - 10	
Answer	Yes
Document Name	
Comment	

Likes 0	
Dislikes 0	
Response	
Alan Kloster - Alan Kloster On Behalf of: Jeremy Harris, Evergy, 3, 5, 1, 6; Kevin Frick, Evergy, 3, 5, 1, 6; Marcus Moor, Evergy, 3, 5, 1, 6; Tiffany Lake, Evergy, 3, 5, 1, 6; - Alan Kloster	
Answer	Yes
Document Name	
Comment	
Likes 0	
Dislikes 0	
Response	
Richard Vendetti - NextEra Energy - 5	
Answer	Yes
Document Name	
Comment	
Likes 0	
Dislikes 0	
Response	
Teresa Krabe - Lower Colorado River Authority - 5	
Answer	Yes
Document Name	
Comment	
Likes 0	
Dislikes 0	
Response	

James Baldwin - James Baldwin On Behalf of: Matt Lewis, Lower Colorado River Authority, 5, 1; - James Baldwin	
Answer	Yes
Document Name	
Comment	
Likes 0	
Dislikes 0	
Response	
Lidija Efremova - Lidija Efremova On Behalf of: Emma Halilovic, Hydro One Networks, Inc., 1; - Lidija Efremova	
Answer	Yes
Document Name	
Comment	
Likes 0	
Dislikes 0	
Response	
Nick Leathers - Nick Leathers On Behalf of: David Jendras Sr, Ameren - Ameren Services, 3, 6, 1; - Nick Leathers	
Answer	Yes
Document Name	
Comment	
Likes 0	
Dislikes 0	
Response	
Rachel Schuldt - Black Hills Corporation - 6, Group Name Black Hills Corporation - All Segments	
Answer	Yes
Document Name	
Comment	

Likes 0	
Dislikes 0	
Response	
Scott Langston - Tallahassee Electric (City of Tallahassee, FL) - 1	
Answer	Yes
Document Name	
Comment	
Likes 0	
Dislikes 0	
Response	
John Pearson - ISO New England, Inc. - 2	
Answer	Yes
Document Name	
Comment	
Likes 0	
Dislikes 0	
Response	
Gail Elliott - Gail Elliott On Behalf of: Michael Moltane, International Transmission Company Holdings Corporation, 1; - Gail Elliott	
Answer	Yes
Document Name	
Comment	
Likes 0	
Dislikes 0	
Response	
Alison Nickells - NiSource - Northern Indiana Public Service Co. - 1	

Answer	Yes
Document Name	
Comment	
Likes 0	
Dislikes 0	
Response	
Amy Wilke - American Transmission Company, LLC - 1	
Answer	Yes
Document Name	
Comment	
Likes 0	
Dislikes 0	
Response	
Stefanie Burke - Portland General Electric Co. - 6	
Answer	Yes
Document Name	
Comment	
Likes 0	
Dislikes 0	
Response	
Rachel Coyne - Texas Reliability Entity, Inc. - 10	
Answer	
Document Name	
Comment	

Texas RE recommends updating the Applicability, 4.1 Functional Entities – 4.1.1 language to include solely and jointly owned facilities. Texas RE recommends the following revision (in bold):

4.1.1 Transmission Owner that owns **or jointly owns** a Transmission station(s) or Transmission substation(s) that meets the applicability criteria of Attachment 1.

Likes 0	
Dislikes 0	

Response

2. Do you agree with the modifications made in CIP-014-4 with new Requirement R2 to address the issues identified in the SAR?

Sean Bodkin - Dominion - Dominion Resources, Inc. - 6, Group Name Dominion

Answer	No
Document Name	

Comment

Dominion Energy in general supports the EEI comments and specifically has concerns with both line of sight and comon roadways being vague and subjective..

Likes 0	
Dislikes 0	

Response

Stefanie Burke - Portland General Electric Co. - 6

Answer	No
Document Name	

Comment

PGE supports the comments of EEI.

Likes 0	
Dislikes 0	

Response

Amy Wilke - American Transmission Company, LLC - 1

Answer	No
Document Name	

Comment

There needs to be more explanation on how the ½ mile criteria works with 2.1 and 2.2. As is written, the language in this section is confusing.

Is the ½ mile the maximum distance to consider, but you need to consider the line of sight too criteria too?
If two stations are within ½ mile of each other, but not in a direct line of sight, how does that impact the qualifications?

ATC recommends eliminating 2.1 and 2.2 to remove the confusion or to have some clarifying examples or sentences in the standard to explain how these sections work together.

Also, the inclusion of non-owned substations (i.e., the “irrespective of ownership” language) may also introduce further complications for TOs in their study analysis and should be further clarified what steps need to be taken to account for these non-owned stations.	
Likes 0	
Dislikes 0	
Response	
Bob Cardle - Bob Cardle On Behalf of: Marco Rios, Pacific Gas and Electric Company, 3, 1, 5; Sandra Ellis, Pacific Gas and Electric Company, 3, 1, 5; Tyler Brun, Pacific Gas and Electric Company, 3, 1, 5; - Bob Cardle	
Answer	No
Document Name	
Comment	
The CIP-014-4 standard introduces a significant change by requiring the inclusion of stations within a 1/2-mile line of sight or easily accessible from a common roadway. However, the standard lacks clear guidelines for selecting stations. This could lead to inconsistencies and challenges in implementation, as different Transmission Owners and Transmission Operators may interpret and apply the criteria differently. To improve clarity and ensure consistent implementation, the standard should provide more detailed guidance on the selection of stations, including specific criteria for evaluating lines of sight and ease of access from common roadways. This would help Transmission Owners and Transmission Operators to better understand the requirements and apply them consistently, ensuring the reliability and security of the electrical grid.	
Likes 0	
Dislikes 0	
Response	
Israel Perez - Israel Perez On Behalf of: Laura Somak, Salt River Project, 3, 6, 5, 1; Mathew Weber, Salt River Project, 3, 6, 5, 1; Thomas Johnson, Salt River Project, 3, 6, 5, 1; Timothy Singh, Salt River Project, 3, 6, 5, 1; - Israel Perez	
Answer	No
Document Name	
Comment	
Salt River Project (SRP) supports the EEI comments and shares the concern with both line of sight and common roadways being vague and subjective.	
Likes 0	
Dislikes 0	
Response	
Selene Willis - Edison International - Southern California Edison Company - 5	
Answer	No

Document Name	
Comment	
See EEI Comments	
Likes 0	
Dislikes 0	
Response	
Robert Blackney - Edison International - Southern California Edison Company - 1	
Answer	No
Document Name	
Comment	
See comments submitted by EEI.	
Likes 0	
Dislikes 0	
Response	
Kelley Sargent - Puget Sound Energy, Inc. - 3	
Answer	No
Document Name	
Comment	
½ mile is a very wide separation criterion for adjacency. A reasonable separation within 200 feet or so seems a more practical consideration for adjacent substations that may be impacted by a single physical event. An event simultaneously impacting 2 stations with ½ mile separation will be difficult to protect from physical security standpoint and cost prohibitive. This aligns with PSE past comments (in June 2024): *It is not clear the type of events CIP-014-4 intends to address that can simultaneously impact 2 or more stations. The standard depends on physical security measures to mitigate such events, however mitigation to the extent may not be feasible nor cost effective.*	
Likes 0	
Dislikes 0	
Response	
Alison Nickells - NiSource - Northern Indiana Public Service Co. - 1	

Answer	No
Document Name	

Comment

NIPSCO agrees with CenterPoint Energy Houston Electric, LLC (CEHE). *"Line of sight" or "ease of access" in Requirement R2 are arbitrary values and should not be used to comply with NERC requirements*

NIPSCO also agrees with AEP. *The intent is to identify close physical proximity such that a singular event could impact both stations; other ranges are irrelevant.* ***Emphasize explicitly in the standard language or Guidelines and Technical Basis that this considers only a single, simultaneous attack****. Considering non-simultaneous attacks makes the number of scenarios infinite and is not feasible to analyze or protect against.*

NIPSCO also agrees with Georgia Transmission Corp: *The intent of the requirement is understood and appreciated. However, the nature of the "single physical attack" needs clarification. Interpretations of this attack can range from events where elements are lost with some time delay between failures (gun shots for example) to a simultaneous loss of all elements (large explosion?). Clarity on the nature of the physical attack or parameters that can be applied to define the attack are needed to avoid differing interpretations of what event is to be studied and how this requirement is to be audited.*

Additionally, this guidance is appropriately located in the TPL space to clarify to planning entities what type of extreme event needs to be evaluated and subsequently communicated to the Transmission

Likes 0	
Dislikes 0	

Response

Ellese Murphy - Ellese Murphy On Behalf of: Katherine Street, Duke Energy , 5, 6, 1, 1; - Ellese Murphy

Answer	No
Document Name	

Comment

Duke Energy does not support the language proposed for R2. The fundamental issue still exists that R2 is not tied to likely threat vectors identified within an entity's security program. We understand that due to the sequencing of the requirements that linking to R8 is not feasible but do think that more general reference to likely threat vectors identified by the entity would create a more meaningful requirement. If the Drafting Team prefers to create R2 in a way that has a uniform distance requirement for proximity sites, we believe that the distance should be based on ballistic threats and a more reasonable distance would be 1000ft. We do not find the ½ mile radius to be technically justified. Duke Energy supports prescribing that line of sight be addressed in documented criteria but does not support prescribing ease of access from a common roadway and supports EEI's comments on this. Ease of access from a common roadway is far more subjective than line of sight and less immediately relevant for a coordinated attack.

It is also still unclear how the criteria can use sites in proximity irrespective of ownership and Duke Energy supports EEI membership's concern on this issue. The requirement to study sites identified in R2 that are not owned by your company creates an unclear path forward for conducting the studies. It is likely that many of these proximity sites will not even be part of the BES and could be owned by entities that do not have any BES assets. There is no mechanism to force these entities to provide the data that would be needed to perform the R3 analysis and comply with CIP-014. We encourage the Drafting Team to consider whether it makes more sense to account for sites of differing ownership when they are determined to be applicable in accordance with Requirement R1 by a different registered entity. Duke Energy recommends the following language for R2:

Each Transmission Owner shall have documented criteria to determine their Transmission station(s) or Transmission substation(s), that are adjacent, adjacent meaning having a perimeter fence within 1000 ft of the perimeter fence of an applicable Transmission station or Transmission substation documented in Requirement R1, that could be impacted by a single physical attack that from likely threats vectors. The Transmission Owner must also include in their criteria identification of adjacent transmission station(s) or substation(s) that are owned and determined to be applicable in accordance with Requirement R1 by a different registered entity. From the adjacent Transmission station(s) or Transmission substation(s), the criteria shall also identify Transmission station(s) or Transmission substation(s) within line of sight from a single location without obstruction of an applicable Transmission station or Transmission substation documented in Requirement R1.

Likes 0	
Dislikes 0	

Response

Gail Elliott - Gail Elliott On Behalf of: Michael Moltane, International Transmission Company Holdings Corporation, 1; - Gail Elliott

Answer	No
Document Name	

Comment

Comments: {C}{C}{C} {C}{C}ITC does not support the changes identified in R2. ITC recommends R2 and all its subparts be revised. The proposed R2 language by the drafting team provides concerns due to the high probability of missing a substation located within the 0.5 mile radius as the TO would not have the required information of all existing nearby facilities nor have the information necessary to identify that the electric facility is a transmission station. Furthermore, a TO is to identify any future transmission stations that could be constructed within 3 years which would be even more difficult to locate. ITC proposes the following for R2 and its sub-parts.

If the TO has identified that it has multiple fenced areas on a site that it considers as one station, there is not clarity if R2 would be applicable. Would these instead just apply to R1?

R2. Each Transmission Owner shall have documented criteria to determine those of its Transmission station(s) and Transmission substation(s) within ½ mile of an applicable Transmission station or Transmission substation documented in Requirement R1 that could be impacted by a single physical attack. The criteria shall address at a minimum the following:

{C}2.1 Line of sight between multiple Transmission station(s) or Transmission substation(s) from a single location without obstruction.

If an entity has multiple fenced areas on a property site but they consider these all one station would they be non-compliant if the loss of all sites was not studied.

Finally, the identification of a physically adjacent site to an applicable station as being critical has issues if the site is not owned by the same entity as the applicable site. If mitigation measures are needed, which entity shall determine the scope of these mitigations and who should pay for them.

Likes 0	
Dislikes 0	

Response

Jennifer Mcnally - Duke Energy - 1,3,5,6 - Texas RE,SERC,RF	
Answer	No
Document Name	

Comment

Duke Energy does not support the language proposed for R2. The fundamental issue still exists that R2 is not tied to likely threat vectors identified within an entity's security program. We understand that due to the sequencing of the requirements that linking to R8 is not feasible but do think that more general reference to likely threat vectors identified by the entity would create a more meaningful requirement. If the Drafting Team prefers to create R2 in a way that has a uniform distance requirement for proximity sites, we believe that the distance should be based on ballistic threats and a more reasonable distance would be 1000ft. We do not find the ½ mile radius to be technically justified. Duke Energy supports prescribing that line of sight be addressed in documented criteria but does not support prescribing ease of access from a common roadway and supports EEI's comments on this. Ease of access from a common roadway is far more subjective than line of sight and less immediately relevant for a coordinated attack.

It is also still unclear how the criteria can use sites in proximity irrespective of ownership and Duke Energy supports EEI membership's concern on this issue. The requirement to study sites identified in R2 that are not owned by your company creates an unclear path forward for conducting the studies. It is likely that many of these proximity sites will not even be part of the BES and could be owned by entities that do not have any BES assets. There is no mechanism to force these entities to provide the data that would be needed to perform the R3 analysis and comply with CIP-014. We encourage the Drafting Team to consider whether it makes more sense to account for sites of differing ownership when they are determined to be applicable in accordance with Requirement R1 by a different registered entity. Duke Energy recommends the following language for R2:

Each Transmission Owner shall have documented criteria to determine their Transmission station(s) or Transmission substation(s), that are adjacent, adjacent meaning having a perimeter fence within 1000 ft of the perimeter fence of an applicable Transmission station or Transmission substation documented in Requirement R1, that could be impacted by a single physical attack that from likely threats vectors. The Transmission Owner must also include in their criteria identification of adjacent transmission station(s) or substation(s) that are owned and determined to be applicable in accordance with Requirement R1 by a different registered entity. From the adjacent Transmission station(s) or Transmission substation(s), the criteria shall also identify Transmission station(s) or Transmission substation(s) within line of sight from a single location without obstruction of an applicable Transmission station or Transmission substation documented in Requirement R1.

Likes 0	
Dislikes 0	

Response

John Pearson - ISO New England, Inc. - 2	
Answer	No
Document Name	

Comment

R2, when combined with other requirements such as R3.3, can lead to an overly conservative outcome. In R2, stations can be grouped together due to being in close proximity to each other. Then testing is done to understand the impact of the loss of the proximity group under R3.3. By way of example, assume that there are two stations near each other, one being a very large station with numerous transmission lines connecting to it, where if tested individually, would result in significant concerns on the remaining system. The second station is a very small station, that if tested individually would

have no meaningful impact on the remaining system. When they are grouped together, the results would not be meaningfully worse than the event occurring at the large, well-interconnected station, yet the second station would get swept into needing CIP-014 upgrades simply because of its proximity, rather than the results of the test being worse. This would require customers to pay for unnecessary physical protection measures to be installed at the smaller station.

Likes 0	
Dislikes 0	

Response

Scott Langston - Tallahassee Electric (City of Tallahassee, FL) - 1

Answer	No
Document Name	

Comment

TAL does not agree with a Transmission Owner making a determination on a Transmission station or Transmission substation that they do not have ownership. This should be the responsibility of the station or substation owner to make those determinations.

Likes 0	
Dislikes 0	

Response

Rachel Schuldt - Black Hills Corporation - 6, Group Name Black Hills Corporation - All Segments

Answer	No
Document Name	

Comment

Black Hills Corporation agrees with EEI's suggestion to strike R2, Part 2.2. R2, Part 2.2 is not needed to meet the primary objectives in the SAR.

Black Hills Corporation also agrees with EEI's suggestion to add examples to the technical rationale describing how to apply the ½ mile distance criteria and line of sight criteria.

Likes 0	
Dislikes 0	

Response

Nick Leathers - Nick Leathers On Behalf of: David Jendras Sr, Ameren - Ameren Services, 3, 6, 1; - Nick Leathers

Answer	No
Document Name	

Comment
Ameren would like more clarification around what to do when there are multiple substations close to each other. We would also like more clarification around why surrounding substations are being included. More definition is needed around what conditions are assumed at the remote site, such as the disabling of protection at both ends.

Likes 0	
Dislikes 0	

Response

Lidija Efremova - Lidija Efremova On Behalf of: Emma Halilovic, Hydro One Networks, Inc., 1; - Lidija Efremova	
Answer	No
Document Name	

Comment
Further clarification required to stations in proximity. Understandably the standard is trying to not be too prescriptive. Is the expectation that the TO use their own discretion to determine which stations are impacted by proximity stations? And then take actions accordingly? Could the wording in the standard result in entities all performing their own methodology (from very limited to thorough) which will result in a request to form another SDT to review and be more prescriptive because they are inconsistent. Clarification is required on what is the expectation and responsibility of a TO inform a neighboring entity they station needs to be reviewed to comply with CIP-014, if it is in proximity. How much can this be enforced by one entity to another. What do we do if its not a transmitter, but a GO.

Likes 0	
Dislikes 0	

Response

James Baldwin - James Baldwin On Behalf of: Matt Lewis, Lower Colorado River Authority, 5, 1; - James Baldwin	
Answer	No
Document Name	

Comment
Complying with this requirement may present several challenges. (R2) We believe having a clearly defined proximity criteria of ½ mile is acceptable. It should be made clear that both sub-requirements (R2.1 and R2.2) are required to be applicable with an “and”.

(R2.1) It may be challenging to establish, document and audit what constitutes as “line of sight”. Factors such as terrain, vegetation, and existing infrastructure can obscure the view. Additionally, these factors may be point-in-time and line of sight could be obscured during initial risk assessment but visible during an Audit site visit.

(R2.2) Assessing the ease of access from roadways requires a thorough understanding of public access. Identifying all routes to a facility, especially in rural or less developed areas, can be challenging.

Also, this requirement may bring new Registered Entities that do not meet R1 into scope. Following the identification of an applicable substation per R2 owned by another Registered Entity, how will a TO ensure that necessary security measures are put in place by the adjacent TO that does not own CIP-014 R1 applicable substations?

Likes 0	
Dislikes 0	

Response

Teresa Krabe - Lower Colorado River Authority - 5

Answer	No
Document Name	

Comment

Complying with this requirement may present several challenges.

(R2) We believe having a clearly defined proximity criteria of ½ mile is acceptable.

It should be made clear that both sub-requirements (R2.1 and R2.2) are required to be applicable with an “and”.

(R2.1) It may be challenging to establish, document and audit what constitutes as “line of sight”. Factors such as terrain, vegetation, and existing infrastructure can obscure the view. Additionally, these factors may be point-in-time and line of sight could be obscured during initial risk assessment but visible during an Audit site visit.

(R2.2) Assessing the ease of access from roadways requires a thorough understanding of public access. Identifying all routes to a facility, especially in rural or less developed areas, can be challenging.

Also, this requirement may bring new Registered Entities that do not meet R1 into scope. Following the identification of an applicable substation per R2 owned by another Registered Entity, how will a TO ensure that necessary security measures are put in place by the adjacent TO that does not own CIP-014 R1 applicable substations?

Likes 0	
Dislikes 0	

Response

Jamison Cawley - Nebraska Public Power District - 1

Answer	No
Document Name	

Comment
We request clarification of the proximity requirement to be physical distance of ½ mile, not electrical distance. We request clarification of acceptable proximity obstruction exclusions such as trees, buildings, highway, etc. Clarify that if an adjacent substation is radial from the substation under study, it is not applicable.

Likes 0	
Dislikes 0	

Response

Richard Vendetti - NextEra Energy - 5	
Answer	No
Document Name	

Comment
NextEra supports the comments provided by EEI below: EEI provides the following revisions for consideration: EEI suggests striking Requirement R2, Part 2.2. The Project Scope described in the SAR for Project 2023-06 does not include ease of access as a needed revision to CIP-014-3 but does explicitly include line-of-sight. Ease of access from a common public roadway may be an appropriate consideration in some scenarios, but it is not appropriate in all cases such as rural scenarios where a common public roadway or common roadway does not exist between stations or where an alternative such as the transmission right of way are more likely access paths. The inclusion of the ½ mile distance and line-of-sight requirement address the primary objectives in the SAR, and the “shall address at a minimum” language provides flexibility to consider additional criteria. Additionally, EEI is concerned with the inclusion of the “irrespective of ownership” language in Requirement R2 because it is not possible to compel non-registered entities, or registered entities that are not subject to CIP-014 to share the information required by the proposed Standard. While we do not have revised language to recommend, we ask the drafting team to consider ways to manage differing ownership that are scoped to registered entities who must comply with CIP-014, or to make revisions that provide flexibility by allowing the Transmission Owner to determine how to manage differing ownership as part of their criteria or methodology. EEI asks the drafting team to consider adding examples or explanations to the technical rationale describing: a. ½ mile distance – Please add a justification for selecting ½ mile as the appropriate distance. Clarify if the drafting team intended for the distance to be based on driving distance, or as the crow flies. b. Line of sight – Please clarify by adding examples of how to apply this. For example, if an entity performed site visits during the summer, line of sight could be impacted by trees/vegetation during the summer that would not impact line of sight during the winter.

Likes 0	
Dislikes 0	

Response

Alan Kloster - Alan Kloster On Behalf of: Jeremy Harris, Evergy, 3, 5, 1, 6; Kevin Frick, Evergy, 3, 5, 1, 6; Marcus Moor, Evergy, 3, 5, 1, 6; Tiffany Lake, Evergy, 3, 5, 1, 6; - Alan Kloster	
Answer	No
Document Name	
Comment	
Evergy supports and incorporates by reference the comments of the Edison Electric Institute for question #2.	
Likes 0	
Dislikes 0	

Response

Dave Krueger - SERC Reliability Corporation - 10	
Answer	No
Document Name	
Comment	
SERC appreciates the ongoing efforts to refine the CIP-014 Risk Assessment portion of the standard. As commented in previous ballots, SERC believes the removal of subrequirement 2.1 would provide additional clarity as those elements are difficult to measure and may change seasonally and over time, and create an uncertain mix of objective and subjective criteria. SERC also believes that further clarity could be added to the ½ mile threshold in R2, to clarify that ½ mile is the distance between closest substation fencelines or Elements – as some large EHV substations may have nearly ¼ mile or more of fenceline among one side.	
Likes 0	
Dislikes 0	

Response

TRACEY JOHNSON - Southern Indiana Gas and Electric Co. - 3,5,6 - RF	
Answer	No
Document Name	
Comment	
Southern Indiana Gas and Electric Company d/b/a CenterPoint Energy Indiana South (SIGE) supports the comments as submitted by Edison Electric Institute (EEI).	
Likes 0	

Dislikes 0	

Response

Kristine Martz - Edison Electric Institute - NA - Not Applicable - NA - Not Applicable	
Answer	No
Document Name	

Comment

EEI provides the following revisions for consideration:

EEI suggests striking Requirement R2, Part 2.2. The Project Scope described in the SAR for Project 2023-06 does not include ease of access as a needed revision to CIP-014-3 but does explicitly include line-of-sight. Ease of access from a common public roadway may be an appropriate consideration in some scenarios, but it is not appropriate in all cases such as rural scenarios where a common public roadway or common roadway does not exist between stations or where an alternative such as the transmission right of way are more likely access paths. The inclusion of the ½ mile distance and line-of-sight requirement address the primary objectives in the SAR, and the “shall address at a minimum” language provides flexibility to consider additional criteria.

Additionally, EEI is concerned with the inclusion of the “irrespective of ownership” language in Requirement R2 because it is not possible to compel non-registered entities, or registered entities that are not subject to CIP-014 to share the information required by the proposed Standard. While we do not have revised language to recommend, we ask the drafting team to consider ways to manage differing ownership that are scoped to registered entities who must comply with CIP-014, or to make revisions that provide flexibility by allowing the Transmission Owner to determine how to manage differing ownership as part of their criteria or methodology.

EEI asks the drafting team to consider adding examples or explanations to the technical rationale describing:

a. ½ mile distance – Please add a justification for selecting ½ mile as the appropriate distance. Clarify if the drafting team intended for the distance to be based on driving distance, or as the crow flies.

b. Line of sight – Please clarify by adding examples of how to apply this. For example, if an entity performed site visits during the summer, line of sight could be impacted by trees/vegetation during the summer that would not impact line of sight during the winter.

Likes 0	
Dislikes 0	

Response

Lucinda Bradshaw - Lucinda Bradshaw On Behalf of: Byron Booker, Oncor Electric Delivery, 1; - Lucinda Bradshaw	
Answer	No
Document Name	

Comment

Oncor does not agree that the modifications made in CIP-014-4 Requirement R2 to address the issues identified in the SAR because the proposed sub-requirements in R2 are still ambiguous and fail to create the consistent approach in the identification of infrastructure critical to the operation of the BPS as sought with the SAR. Due to varying geographical locations of facilities and the overall flexibility to document the criteria used to determine

proximity, inconsistencies in approaches to perform risk assessments will remain. We recommend that R2.1 and R2.2 be replaced with specific and measurable criteria. For example, the Director of National Intelligence Joint Counterterrorism Assessment Team (JCAT) has published bomb threat standoff distances in which the mandatory evacuation distances for an SUV/VAN explosive threat is 400 feet. Guidelines such as these are used by Physical Security Professionals when performing the evaluation required by CIP-014-3 R6. For consistency, we recommend that a distance between 400 feet to 1000 feet be specified in CIP-014-4 R2.

Additionally, we request clarification of the proposed R2 language concerning voltage classes applicable to stations in proximity. While the proposed R2 language points to R1 stations concerning proximity, and R1 points to Attachment 1, in which lines less than 200 kV are not applicable, it is unclear that the same "less than 200 kV" exclusion applies to those facilities that are in physical proximity to facilities to which R1 is applicable. We request that R2 be clarified to state that only facilities above 200 kV and in proximity to applicable facilities under R1 are to be considered.

As revised, R2 now places the burden on a Transmission Owner ("TO") to track those Transmission stations and Transmission substations that are within ½ mile of that TO's own Transmission station or Transmission substation even if they are *owned by other parties*. Not all TOs willingly disclose the exact location of their stations or substations, and some consider the geographic locations of their stations and substations to constitute CEII. Both of these scenarios will impede a TO's ability to obtain the necessary location information. In addition, this proposed approach could present significant issues for entities that are in competition with one another, which is the case in certain areas of Texas in which multiple entities are certificated to provide service in the same geographic area or in areas containing numerous Transmission stations or Transmission substations owned by various entities in close proximity.

We also point out that the language in R2 "that could be impacted by a single physical attack" is too vague and could create significant disparities in how threat assessments are performed in accordance with R2. Under CIP-014-4 R2, each TO would be responsible for determining what an "impact" is and when it could occur. As a result, this vague requirement may create challenges when stations or substations are within the same line of sight from a single location or share access from a common roadway, but are owned by different entities. If those different TO are not aligned in how "impact" is determined and the procedures and processes implemented to ensure compliance with CIP-014-4 R2, then disagreements between those entities on whether their stations or substations could have been impacted by a single physical attack could arise. Such disagreements could make determining compliance with CIP-014-4 R2 for each of the disagreeing entities particularly difficult.

Likes 0	
Dislikes 0	

Response

Chantal Mazza - Chantal Mazza On Behalf of: Junji Yamaguchi, Hydro-Quebec (HQ), 1, 5; Nicolas Turcotte, Hydro-Quebec (HQ), 1, 5; - Chantal Mazza

Answer	No
Document Name	

Comment

The NPCC RSC has a concern in the event of two entities disagreeing with a line of sight risk assessment. We suggest adding a common form and/or process to reconcile CIP-014 line of sight assessments disagreements so to avert non-compliance by either entity.

We would recommend issuing formal guidance on a "line of sight" and "common roadway" and how to assess those two terms.

Likes 0	
Dislikes 0	

Response	
Diana Aguas - CenterPoint Energy Houston Electric, LLC - 1 - Texas RE	
Answer	No
Document Name	
Comment	
CenterPoint Energy Houston Electric, LLC (CEHE) believes “line of sight” or “ease of access” in Requirement R2 are arbitrary values and should not be used to comply with NERC requirements. CEHE in general supports the EEI comments and specifically has concerns about the inclusion of the “irrespective of ownership” language in Requirement R2 because it is not possible to compel non-registered entities, or registered entities that are not subject to CIP-014 to share the information required by the proposed Standard. While we do not have revised language to recommend, we ask the drafting team to consider ways to manage differing ownership that are scoped to registered entities who must comply with CIP-014, or to make revisions that provide flexibility by allowing the Transmission Owner to determine how to manage differing ownership as part of their criteria or methodology.	
Likes 0	
Dislikes 0	
Response	
Clay Walker - Clay Walker On Behalf of: Robert Hirchak, Cleco Corporation, 6, 5, 1, 3; - Clay Walker	
Answer	No
Document Name	
Comment	
Cleco agrees with EEI comments.	
Likes 0	
Dislikes 0	
Response	
Stephen Stafford - Stephen Stafford On Behalf of: Greg Davis, Georgia Transmission Corporation, 1; - Stephen Stafford	
Answer	No
Document Name	
Comment	
The intent of the requirement is understood and appreciated. However, the nature of the “single physical attack” needs clarification. Interpretations of this attack can range from events where elements are lost with some time delay between failures (gun shots for example) to a simultaneous loss of all	

elements (large explosion?). Clarity on the nature of the physical attack or parameters that can be applied to define the attack are needed to avoid differing interpretations of what event is to be studied and how this requirement is to be audited.

Additionally, this guidance is appropriately located in the TPL space to clarify to planning entities what type of extreme event needs to be evaluated and subsequently communicated to the Transmission Owner.

Likes 0	
Dislikes 0	

Response

Ruida Shu - Northeast Power Coordinating Council - 1,2,3,4,5,6,7,8,9,10 - NPCC, Group Name NPCC RSC

Answer	No
Document Name	

Comment

The NPCC RSC has a concern in the event of two entities disagreeing with a line of sight risk assessment. We suggest adding a common form and/or process to reconcile CIP-014 line of sight assessments disagreements so to avert non-compliance by either entity.

We would recommend issuing formal guidance on a “line of sight” and “common roadway” and how to assess those two terms.

Likes 0	
Dislikes 0	

Response

Amy Wesselkamper - PNM Resources - Public Service Company of New Mexico - 3

Answer	No
Document Name	

Comment

PNM and TNMP support EEI comments

Likes 0	
Dislikes 0	

Response

Devin Shines - PPL - Louisville Gas and Electric Co. - 1,3,5,6 - SERC,RF

Answer	No
Document Name	

Comment
LG&E/KU supports most of the modifications in Requirement R2. The 1/2 mile radius provides a clear boundary to the area considered proximate. However, we also support the additional feedback and asks for clarification submitted in EEI's comments.

Likes 0	
Dislikes 0	

Response

Gary Trezza - Long Island Power Authority - 1 - NPCC	
Answer	No
Document Name	

Comment
This particular requirement does not identify a need for a TO with facilities that meet the requirement to inform an adjacent TO (i.e., a TO that is a different owner) who's facilities fall under the distance identified under R2. It seems unreasonable for a TO to have to assess another TO's facilities or know if their future plans would create an impact to them due to proximity of where the facility is installed. LIPA would suggest adding language requiring TO's who identify facilities under R2 to coordinate and notify adjacent TO's in support of their own assessment. There is also a concern in the event two different entities disagree with a line of sight risk assessment. We suggest adding a common form and/or process to reconcile CIP-014 line of sight assessments / disagreements so to avert non-compliance by either entity. We would recommend issuing formal guidance on a "line of sight" and "common roadway" and how to assess those two terms.

Likes 0	
Dislikes 0	

Response

Leshel Hutchings - AEP - 3	
Answer	No
Document Name	

Comment
The intent is to identify close physical proximity such that a singular event could impact both stations; other ranges are irrelevant. **Emphasize explicitly in the standard language or Guidelines and Technical Basis that this considers only a single, simultaneous attack**. Considering non-simultaneous attacks makes the number of scenarios infinite and is not feasible to analyze or protect against.

Likes 0	
Dislikes 0	

Response

Nikki Carson-Marquis - Nikki Carson-Marquis On Behalf of: Theresa Allard, Minnkota Power Cooperative Inc., 1; - Nikki Carson-Marquis	
Answer	No
Document Name	
Comment	
MPC concurs with the MRO NSRF's request for clarification.	
Likes 0	
Dislikes 0	
Response	
Ronald Hoover - Bonneville Power Administration - 1,3,5,6 - WECC	
Answer	No
Document Name	
Comment	
BPA recognizes a significant improvement in the language of R2, however BPA finds the proximity text is still highly subjective. BPA asks "What does the process look like when one Registered Entity brings in owners of other facilities?" BPA sees a potentially dramatic increase in modeling concerns considering multiple Facilities owned by multiple entities. BPA believes there is insufficient detail about expected actions when new Facilities are added due to proximity and recommends adding clarity to the expected actions. As an example, when a new facility is added, a study should be conducted with the option of ruling out the criticality of the new facility. Finally, BPA believes the intent of CIP-014 is changing from identifying a very small number of absolutely critical substations to requiring Registered Entities to expand their lists due to proximity.	
Likes 0	
Dislikes 0	
Response	
Tamarra Hardie - Tamarra Hardie On Behalf of: Diane E Landry, Public Utility District No. 1 of Chelan County, 3, 5, 1, 6; - Public Utility District No. 1 of Chelan County - 6, Group Name CHPD	
Answer	No
Document Name	
Comment	
The 'line of sight' and 'ease of access' ambiguous term usage concerns remain from the previous draft. However, the removal of the 'close enough proximity' language and the addition of the 'within ½ mile of an applicable Transmission station(s)' was an improvement for R2. This change adds some clarity and removes some ambiguity from this requirement that was present in previous draft versions.	

Likes 0	
Dislikes 0	
Response	
Jeffrey Streifling - NB Power Corporation - 1	
Answer	No
Document Name	
Comment	
The NPCC RSC has a concern in the event of two entities disagreeing with a line of sight risk assessment. We suggest adding a common form and/or process to reconcile CIP-014 line of sight assessments disagreements so to avert non-compliance by either entity. We would recommend issuing formal guidance on a “line of sight” and “common roadway” and how to assess those two terms.	
Likes 0	
Dislikes 0	
Response	
Erin Wilson - NB Power Corporation - New Brunswick Power Transmission Corporation - 5	
Answer	No
Document Name	
Comment	
The NPCC RSC has a concern in the event of two entities disagreeing with a line of sight risk assessment. We suggest adding a common form and/or process to reconcile CIP-014 line of sight assessments disagreements so to avert non-compliance by either entity. We would recommend issuing formal guidance on a “line of sight” and “common roadway” and how to assess those two terms.	
Likes 0	
Dislikes 0	
Response	
Kevin Conway - Western Power Pool - 4	
Answer	No
Document Name	
Comment	

The 1/2-mile radius is arbitrary and has no technical justification. This part of the requirement should be removed, and the documented criteria required by R2 should require where substations are within line-of-site and how the threat of a single attack is mitigated through distance or other mitigation.

Likes 0	
Dislikes 0	

Response

Dwanique Spiller - Berkshire Hathaway - NV Energy - 5

Answer	Yes
Document Name	

Comment

NV Energy appreciates the addition of the ½ mile bright line criteria to remove ambiguity and subjectivity.

NV Energy requests that the SDT provide clarity on the following items:

Clarify in the rationale that the Transmission stations within a ½ mile of an applicable Transmission station is based on distance “as the crow flies” and not electrical distance.

Clarify using examples of what are acceptable proximity exclusion obstructions such as trees, buildings, highway, etc. or is this up to each individual assessment criteria?

Clarify in the rationale if an adjacent substation is radial from the substation under study, then it is not applicable. Add examples to the rationale to address the various scenarios involving a substation under study and any adjacent substations meeting the ½ mile proximity. For example: Are they faulted simultaneously or individually with or without the same damage or inoperability? Are these questions up to each individual assessment methodology?

Likes 0	
Dislikes 0	

Response

Daniel Gacek - Exelon - 1

Answer	Yes
Document Name	

Comment

Exelon does not object to the current language of R2. The inclusion of the ½ mile threshold provides beneficial specificity to the requirement. To strengthen the durability of this ½ mile threshold we request the drafting team to add the technical basis for this threshold into the standard.

Submitted on behalf of Exelon - Segments 1 & 3

Likes 0	
Dislikes 0	

Response

Carver Powers - Utility Services, Inc. - 4

Answer	Yes
Document Name	

Comment

For section 2.2, request clarification on “ease of access”. Does a fence, gate, or a speedbump limit the ease of access concern? Recommend providing guidance in either the standard or technical rationale.

Likes 0	
Dislikes 0	

Response

Donna Wood - Tri-State G and T Association, Inc. - 1

Answer	Yes
Document Name	

Comment

Tri-State supports MRO NSRF comments regarding the need for clarity.

Likes 0	
Dislikes 0	

Response

Ben Hammer - Western Area Power Administration - 1

Answer	Yes
Document Name	

Comment

Please provide R2.1 rationale for line of sight distance as this is likely different than other distances (such as the conductor distance) and could require additional analysis to determine. Also, please identify acceptable obstructions.	
Likes 0	
Dislikes 0	
Response	
Mark Garza - FirstEnergy - FirstEnergy Corporation - 4, Group Name FE Voter	
Answer	Yes
Document Name	
Comment	
FirstEnergy has no concerns with the proposed R2 for CIP-014-4.	
Likes 0	
Dislikes 0	
Response	
Brian Millard - Tennessee Valley Authority - 1,3,5,6 - SERC, Group Name TVA RBB	
Answer	Yes
Document Name	
Comment	
The addition of 1/2 mile of applicable Transmission station(s) and Transmission substation(s) provides enough guidance to adhere to 2.1 and 2.2.	
Likes 0	
Dislikes 0	
Response	
Jodirah Green - ACES Power Marketing - 1,3,4,5,6 - MRO,WECC,Texas RE,SERC,RF, Group Name ACES Collaborators	
Answer	Yes
Document Name	
Comment	
Likes 0	

Dislikes 0	
Response	
Jennie Wike - Jennie Wike On Behalf of: John Merrell, Tacoma Public Utilities (Tacoma, WA), 1, 4, 5, 6, 3; - Jennie Wike, Group Name Tacoma Power	
Answer	Yes
Document Name	
Comment	
Likes 0	
Dislikes 0	
Response	
Robert Jones - Seattle City Light - 4	
Answer	Yes
Document Name	
Comment	
Likes 0	
Dislikes 0	
Response	
Andrew Smith - APS - Arizona Public Service Co. - 5	
Answer	Yes
Document Name	
Comment	
Likes 0	
Dislikes 0	
Response	
Tim Kelley - Tim Kelley On Behalf of: Charles Norton, Sacramento Municipal Utility District, 3, 6, 4, 1, 5; Foung Mua, Sacramento Municipal Utility District, 3, 6, 4, 1, 5; Kevin Smith, Balancing Authority of Northern California, 1; Nicole Looney, Sacramento Municipal Utility District, 3,	

6, 4, 1, 5; Ryder Couch, Sacramento Municipal Utility District, 3, 6, 4, 1, 5; Wei Shao, Sacramento Municipal Utility District, 3, 6, 4, 1, 5; - Tim Kelley, Group Name SMUD and BANC	
Answer	Yes
Document Name	
Comment	
Likes 0	
Dislikes 0	
Response	
Jessica Cordero - Unisource - Tucson Electric Power Co. - 1	
Answer	Yes
Document Name	
Comment	
Likes 0	
Dislikes 0	
Response	
Matt Carden - Southern Company - Southern Company Services, Inc. - 1	
Answer	Yes
Document Name	
Comment	
Likes 0	
Dislikes 0	
Response	
Richard Jackson - U.S. Bureau of Reclamation - 1	
Answer	Yes
Document Name	
Comment	

Likes 0	
Dislikes 0	
Response	
Sean Steffensen - IDACORP - Idaho Power Company - 1	
Answer	Yes
Document Name	
Comment	
Likes 0	
Dislikes 0	
Response	
Rebika Yitna - Rebika Yitna On Behalf of: Roger Brand, MEAG Power, 3, 1; - Rebika Yitna	
Answer	Yes
Document Name	
Comment	
Likes 0	
Dislikes 0	
Response	
Joshua London - Eversource Energy - 1, Group Name Eversource	
Answer	Yes
Document Name	
Comment	
Likes 0	
Dislikes 0	
Response	

James Keele - Entergy - 3	
Answer	Yes
Document Name	
Comment	
Likes 0	
Dislikes 0	
Response	
Matthew Nicklin - Southern Illinois Power Cooperative - 1,3,5 - SERC	
Answer	Yes
Document Name	
Comment	
Likes 0	
Dislikes 0	
Response	
Mark Flanary - Midwest Reliability Organization - 10	
Answer	Yes
Document Name	
Comment	
Likes 0	
Dislikes 0	
Response	
Rachel Coyne - Texas Reliability Entity, Inc. - 10	
Answer	
Document Name	
Comment	

Texas RE recommends R2 be clarified to state “within ½ mile of **straight areal distance from** an applicable transmission station or transmission substation documented in Requirement R1.	
Likes 0	
Dislikes 0	
Response	

3. Do you agree with the modifications made in CIP-014-4 with new Requirement R3 to address the issues identified in the SAR?

Kevin Conway - Western Power Pool - 4

Answer	No
Document Name	

Comment

The loss of any single substation under R3 is essentially studied as part of the TPL standards yearly. The R3 requirement should be limited to those facilities identified in R2. This avoids duplication of other standards and work, especially for smaller organizations that do not have dedicated planning staff.

Transmission Owners do not have planning staff to do steady-state and dynamic studies, that is a Transmission Planner function. Transmission Owners are responsible to build and maintain transmission assets. R3 should be focused on Transmission Planners to complete these studies and distribute them to the TO entities to implement action plans when there are negative findings. TOs should be required to provide information needed to the Transmission Planners so the studies can be relevant and accurate.

Likes 0	
Dislikes 0	

Response

Erin Wilson - NB Power Corporation - New Brunswick Power Transmission Corporation - 5

Answer	No
Document Name	

Comment

We recommend removing the word “proximity” and making it consistent with R2 wording.

We recommend the SDT to consider that planning and simulation studies (Part 3.1) are not solely be located in a physical security standard regardless of how load is lost (hurricane, fire, earthquake, physical attack, etc.)

We also recommend removing “proximity” from 3.3 and make it consistent with the rest of the standard.

Likes 0	
Dislikes 0	

Response

Jeffrey Streifling - NB Power Corporation - 1

Answer	No
Document Name	

Comment
We recommend removing the word “proximity” and making it consistent with R2 wording. We recommend the SDT to consider that planning and simulation studies (Part 3.1) are not solely be located in a physical security standard regardless of how load is lost (hurricane, fire, earthquake, physical attack, etc.) We also recommend removing “proximity” from 3.3 and make it consistent with the rest of the standard.

Likes 0	
Dislikes 0	

Response

Mark Flanary - Midwest Reliability Organization - 10	
Answer	No
Document Name	

Comment
A suggestion for R3.1: As currently written the terms "instability, uncontrolled separation, or Cascading within an Interconnection" are unclear within the context of a given Entity and do not provide a solid basis for the Entity to implement their program or for oversight to compare. MRO recommends that the Entity be required to define these terms in the context of the studies within their system and to identify criteria when "instability, uncontrolled separation, or Cascading within an Interconnection" occur. A suggestion for R3.2: MRO finds the term "more likely to contribute" to be vague and subjective. Consider enhancing by adding the requirement to document the rationale for the condition selections; for example justification based on historical events, and conditions identified in other studies. The proposed language for R3.3 motivates MRO's negative vote on this draft. Specifically, the use of the term "fault" opens the door to the usage of less severe faults. We recommend changing "fault" to "a fault that will cause the most severe consequences at that substation" to ensure the most serious scenario is studied. We believe the currently drafted language will reduce the effectiveness of the standard.

Likes 0	
Dislikes 0	

Response

Tamarra Hardie - Tamarra Hardie On Behalf of: Diane E Landry, Public Utility District No. 1 of Chelan County, 3, 5, 1, 6; - Public Utility District No. 1 of Chelan County - 6, Group Name CHPD	
Answer	No
Document Name	

Comment

The ‘line-of-sight’ and ‘ease of access’ term usage concerns mentioned in comment section 2 above also applies to R3 since R3.3 refers to R2 station applicability. However, edits to R3.4.2 appear to provide more flexibility to entities and are an improvement from the previous draft version.

Likes 0	
Dislikes 0	

Response

James Keele - Entergy - 3

Answer	No
Document Name	

Comment

[R3.3] states the analysis should include a fault at the R1 applicable station and a fault at any proximate R2 station. [R3.4] states the fault simulation should assume loss of communication and protection system at the station being studied. Existing language is not clear whether one is to assume loss of protection system on only the proximate facility or both the applicable and proximate facility at the same time.

Adrian Lazo:

[R3.4.2.] Consider removal of the word “more” in requirement. “More conservative” implies the actual clearing times are known and you then assume a more conservative value. However, you would use a conservative estimate when the actual clearing times are not known.

3.4.2. Actual or more conservative estimates of clearing times shall be used unless otherwise technically substantiated.

Adrian Lazo:

[R3.2.2.] Adding unstable generators tripped from the dynamic stability study to the steady-state contingency definition would create overly conservative results. Historically, both studies have been done in parallel and not directly informed each other.

Steady-state studies typically assume constant power loads where power does not vary with changes in voltage magnitude. This is a valid assumption for steady state studies but in reality, loads do not behave this way and differs greatly from how loads are represented in dynamic studies.

For dynamic studies the composite load model (CMLD) has seen increased adoption among utilities and more accurately reflects the aggregate behavior of motors. The model includes parameters which dictate fractions of the motor load components that do not restart, even if voltage recovers above the undervoltage trip thresholds. There is currently no industry consensus on whether this fraction of non-restart able motor loss is consequential or non-consequential load loss. Entergy’s stance is that this is consequential load loss as it’s impossible to prevent and would occur even for normally cleared faults due to typical undervoltage time delays of 2-3 cycles. Consequential load loss is commonly excluded from steady-state load loss criteria.

In summary, reflecting tripped generators from the stability study to the steady-state study would only make sense if loads were also reduced by the fraction of non-restart able motor loss. This would be extremely tedious as there is currently no practical way to achieve this with the tools available to Transmission Planners. There may be other issues that may need to be considered. Removal of the “including any tripped elements from dynamic simulations” language or a written exclusion for unstable generators should be considered.

Likes 0	
Dislikes 0	
Response	
Joshua London - Eversource Energy - 1, Group Name Eversource	
Answer	No
Document Name	
Comment	
Eversource has concerns with the phrase “other unacceptable post-event response within an Interconnection” in R3.1.1. A Transmission Planner may not know what is considered acceptable post-event response for an entire Interconnection. Direction on how to coordinate with the entire Interconnection or a minimum expectation should be provided. For example, Eversource is located in ISO New England; ISO New England may have certain acceptable frequency of 58 Hz but Pennsylvania may have a stricter 59 Hz limit, unbeknownst to the Transmission Planner. Another example would be power flow, where an acceptable amount of generation loss would not be known for an entire Interconnection, as impacts could occur outside the TP’s immediate area.	
Likes 0	
Dislikes 0	
Response	
Ronald Hoover - Bonneville Power Administration - 1,3,5,6 - WECC	
Answer	No
Document Name	
Comment	
BPA believes section 3.2.2 will significantly increase the steady state processes and consequently increase overall costs. BPA finds the wording of 3.2.2 is too prescriptive, therefore the language should be removed.	
Likes 0	
Dislikes 0	
Response	
Nikki Carson-Marquis - Nikki Carson-Marquis On Behalf of: Theresa Allard, Minnkota Power Cooperative Inc., 1; - Nikki Carson-Marquis	
Answer	No
Document Name	

Comment
MPC concurs with the MRO NSRF's request for clarification.

Likes 0	
Dislikes 0	

Response

Leshel Hutchings - AEP - 3	
Answer	No
Document Name	

Comment
1. Please either remove 3.1.1 or merge it into 3.1. 2. The phrase "other unacceptable post-event response within an interconnection" in 3.1.1 should be limited to instability, uncontrolled separation, or Cascading. This phrase is too open ended and ill-defined. It is enough to now be adding generation loss and load loss to the instability, uncontrolled separation, and Cascading of the approved version. The SDT now has five measures of station criticality; there is no need to open the door for more. Therefore, please replace this phrase with "instability, uncontrolled separation, or cascading" or remove it entirely. 3. For clarity, we suggest expanding 3.1 to a numbered list as follows: "Technically supported thresholds and rationale for determining: 3.1.1 the amount of acceptable load loss, 3.1.2 the amount of acceptable generation loss, 3.1.3 post-event response resulting in instability having a critical impact on the operation of the interconnection, 3.1.4 uncontrolled separation, and 3.1.5 Cascading" 4. The phrase "System conditions that are more likely to contribute" in 3.2 is too open ended and ill-defined. Please replace this with "one System peak load case or System off-peak load case, whichever may be more likely to contribute..." 5. 3.2.2. Feeding dynamic outages into steady state cases will lead to significant nonconvergence issues in steady state if applied in the contingency or even if a base case is created with these outages because the appropriate timing delay cannot be reflected. If outages are applied individually and manually post-contingency this will be a significant increase in the burden of the steady state analysis.

Likes 0	
Dislikes 0	

Response

Ben Hammer - Western Area Power Administration - 1	
Answer	No
Document Name	

Comment
Please consider language that is clear/specific regarding what is required, at a minimum, to meet the requirements of the standard. Having language in a requirement saying "and any additional considerations recognized as" and "that are more likely to" are too general and broad. This introduces challenges, inconsistencies, and confusion regarding what specifically must be considered in order to meet compliance with the requirement. Suggested language is provided below. Reordering of the subparts of Requirement R3 should be considered depending on the language that is ultimately chosen.

R3. Each Transmission Owner shall have a documented risk assessment methodology for evaluating the loss due to a physical attack of each applicable Transmission station(s) and Transmission substation(s) documented in Requirement R1 and Transmission substation(s) or Transmission station(s) determined to be in proximity per Requirement R2. The methodology shall include, at a minimum, the following:

3.1. Technical rationale for determining the amount of acceptable post-event load loss and generation loss.

3.2. The criteria or methodology used to identify instability, uncontrolled separation, or Cascading within an Interconnection.

3.3 Rationale for the System conditions selected for performing the studies.

3.4 For each applicable Transmission station or Transmission substation listed in accordance with Requirement R1, analysis shall include the following:

3.4.1. A Fault at the applicable Transmission station or Transmission substation and each Transmission station or Transmission substation identified in accordance with Requirement R2 as being in proximity to the applicable Transmission station or Transmission substation.

3.4.2. The removal of all Elements that the Protection System and other automatic controls are expected to disconnect for each event.

3.4.3. Steady-state simulations shall include any additional tripped Elements identified from the dynamic simulation of an event.

3.4.4. Dynamic simulations that assume the loss of communication and the Protection System at the Transmission station(s) or Transmission substation(s) shall use the following:

3.4.4.1 Delayed (remote-end) clearing times unless otherwise technically substantiated.

3.4.4.2 Actual or more conservative estimates of clearing times unless otherwise technically substantiated.

Likes 0	
Dislikes 0	

Response

Gary Trezza - Long Island Power Authority - 1 - NPCC

Answer	No
Document Name	

Comment

a) We recommend removing the word “proximity” from R2 and R 3.3 and making the wording consistent with the R2 wording.

b) The wording for R3.2, R3.3 and R3.4 is written a little out of context with the intent of R3, which is to develop a documented risk assessment methodology. It is recommended to consider moving R3.2, R3.3 and R3.4 to be sub-requirements of R5.

Likes 0	
Dislikes 0	

Response

Rebika Yitna - Rebika Yitna On Behalf of: Roger Brand, MEAG Power, 3, 1; - Rebika Yitna	
Answer	No
Document Name	
Comment	
Additional clarity (explanation) is requested for R3, 3.3 regarding the intent of the language for analysis that includes a Fault ("…analysis shall include a Fault at the applicable Transmission station…") since there could be different interpretations within the industry.	
Likes 0	
Dislikes 0	
Response	

Matt Carden - Southern Company - Southern Company Services, Inc. - 1	
Answer	No
Document Name	
Comment	
Southern Company appreciates the efforts the drafting team made to add flexibility to the simulation of a physical attack as it pertains to Requirement R3.3. However, the SAR differentiates the CIP-014 assessment from other planning assessments in that “the risk assessment requires the entire transmission station to be considered as rendered inoperable or damaged as the result of physical attack rather than just particular elements electrically connected to a single electrical disturbance.” Southern Company requests the SDT add more clarity to Requirement R3.3 to address this portion of the SAR while still maintaining some flexibility that was evident in this draft. Otherwise, we are concerned the industry will have vastly different interpretations of this requirement that lead to inconsistency in analysis and verification.	
Likes 0	
Dislikes 0	
Response	

Amy Wesselkamper - PNM Resources - Public Service Company of New Mexico - 3	
Answer	No
Document Name	
Comment	
PNM and TNMP support EEI comments. Additionally, language in 3.2 seems quite vague. What are “conditions that are more likely to contribute to”? Please consider adding technical rationale/guidance.	
Likes 0	

Dislikes 0	
Response	
Jessica Cordero - Unisource - Tucson Electric Power Co. - 1	
Answer	No
Document Name	
Comment	
If an identified site is found to cause instability, uncontrolled separation, or Cascading within an Interconnection when rendered inoperable or damaged as a result of a physical attack during steady state analysis, then there should be no reason to perform dynamic analysis on that site.	
Likes 0	
Dislikes 0	
Response	
Ruida Shu - Northeast Power Coordinating Council - 1,2,3,4,5,6,7,8,9,10 - NPCC, Group Name NPCC RSC	
Answer	No
Document Name	
Comment	
We recommend removing the word “proximity” and making it consistent with R2 wording. We recommend the SDT to consider that planning and simulation studies (Part 3.1) are not solely be located in a physical security standard regardless of how load is lost (hurricane, fire, earthquake, physical attack, etc.) We also recommend removing “proximity” from 3.3 and make it consistent with the rest of the standard. The NPCC RSC has concerns with the phrase “other unacceptable post-event response within an Interconnection” in R3.1.1. A Transmission Planner may not know what is considered acceptable post-event response for an entire Interconnection. Direction on how to coordinate with the entire Interconnection or a minimum expectation should be provided. For example, a company is located in ISO New England; ISO New England may have certain acceptable frequency of 58 Hz, but Pennsylvania may have a stricter 59 Hz limit, unbeknownst to the Transmission Planner. Another example would be power flow, where an acceptable amount of generation loss would not be known for an entire Interconnection, as impacts could occur outside the TP’s immediate area.	
Likes 0	
Dislikes 0	
Response	
Stephen Stafford - Stephen Stafford On Behalf of: Greg Davis, Georgia Transmission Corporation, 1; - Stephen Stafford	

Answer	No
Document Name	
Comment	
Developing steady-state and dynamic simulation criteria is a planning function and should not be required of a Transmission Owner. The sub-requirements go further into addressing what a transmission planning study should include but applies this requirement incorrectly to the Transmission owner. The intent of R3 is more appropriately applicable to the TPL body of standards. CIP-014 should reference output from a study performed in accordance with a clearly defined TPL requirement for an extreme event involving the loss of an applicable Transmission station(s) or substation(s).	
Likes 0	
Dislikes 0	
Response	
Clay Walker - Clay Walker On Behalf of: Robert Hirchak, Cleco Corporation, 6, 5, 1, 3; - Clay Walker	
Answer	No
Document Name	
Comment	
Cleco agrees with EEI comments.	
Likes 0	
Dislikes 0	
Response	
Diana Aguas - CenterPoint Energy Houston Electric, LLC - 1 - Texas RE	
Answer	No
Document Name	
Comment	
CEHE supports EEI's comments for requirements 3.1 and 3.3. In addition, CEHE has concerns with planning assessments to simulate "the loss of communications and system protection" as listed in Requirement 3, part R3.4. CEHE believes it is an unnecessary burden on TPs, where now TPs are required to perform steady state assessments but also stability simulations. The loss of any single substation under R3 is already studied annually as part of TPL standards. Requirement R3, Part 3.2.2 goes beyond the scope of what is documented in the SAR by requiring additional steady-state analysis after the steady-state and dynamic simulations show acceptable system response. The SAR specifically states that "[t]o ensure that a station is effectively identified as non-critical, registered entities need to have performed both steady-state and dynamic studies" but does not go into further detail about performing another steady-state analysis that includes any tripped Elements from the dynamic simulations. We suggest striking Requirement R3, Part 3.2.2.	
Likes 0	

Dislikes 0	

Response

Chantal Mazza - Chantal Mazza On Behalf of: Junji Yamaguchi, Hydro-Quebec (HQ), 1, 5; Nicolas Turcotte, Hydro-Quebec (HQ), 1, 5; - Chantal Mazza

Answer	No
Document Name	

Comment

We recommend removing the word “proximity” and making it consistent with R2 wording.

We recommend the SDT to consider that planning and simulation studies (Part 3.1) are not solely be located in a physical security standard regardless of how load is lost (hurricane, fire, earthquake, physical attack, etc.)

We also recommend removing “proximity” from 3.3 and make it consistent with the rest of the standard.

The NPCC RSC has concerns with the phrase “other unacceptable post-event response within an Interconnection” in R3.1.1. A Transmission Planner may not know what is considered acceptable post-event response for an entire Interconnection. Direction on how to coordinate with the entire Interconnection or a minimum expectation should be provided. For example, a company is located in ISO New England; ISO New England may have certain acceptable frequency of 58 Hz, but Pennsylvania may have a stricter 59 Hz limit, unbeknownst to the Transmission Planner. Another example would be power flow, where an acceptable amount of generation loss would not be known for an entire Interconnection, as impacts could occur outside the TP’s immediate area.

Likes 0	
Dislikes 0	

Response

Lucinda Bradshaw - Lucinda Bradshaw On Behalf of: Byron Booker, Oncor Electric Delivery, 1; - Lucinda Bradshaw

Answer	No
Document Name	

Comment

The referenced “System conditions that are more likely to contribute to instability, uncontrolled separation, or Cascading within an Interconnection” mentioned in R3.2 need to be clarified. In ERCOT, a TO can explain why it selected the study cases it did, but each utility can only select those cases based on its experience with its own system. If there are specific “System conditions” that need to be studied, those “System conditions” should be specified and explained in R3.2.

Likes 0	
Dislikes 0	

Response

Andrew Smith - APS - Arizona Public Service Co. - 5	
Answer	No
Document Name	
Comment	
AZPS agrees with EEI's comments regarding the inclusion of load loss and generation loss within Part 3.1 which is not required by the SAR. Additionally, AZPS supports EEI's proposed language to resolve this issue.	
Likes 0	
Dislikes 0	
Response	
Kristine Martz - Edison Electric Institute - NA - Not Applicable - NA - Not Applicable	
Answer	No
Document Name	
Comment	

EEI proposes the following revisions for consideration:

The term "proximity" is not used in Requirement R2. EEI suggests removing it from Requirement R3 and its sub parts.

R3. Each Transmission Owner shall have a documented risk assessment methodology, including criteria for steady-state and dynamic simulations, for evaluating the loss due to a physical attack of each applicable Transmission station(s) and Transmission substation(s) documented in Requirement R1 and Transmission substation(s) or Transmission station(s) determined per Requirement R2. The methodology shall include, at a minimum, the following:

Requirement R3, Parts 3.1 and 3.1.1 include duplicative concepts that could lead to confusion implementing and/or documenting the requirement parts. As an example, Requirement R3 requires the Transmission Owner to have a documented risk assessment methodology, including criteria for steady-state and dynamic simulations. Requirement R3, Part 3.1 requires the methodology to include technically supported thresholds and rationale, and Part 3.1.1 restates the requirement for the technical rationale to include steady-state and dynamic system response to events. EEI suggests consolidating the requirement parts as written below:

3.1 Technically supported thresholds and rationale for determining the amount of acceptable load loss, the amount of acceptable generation loss post-event response, and any additional considerations recognized as resulting in instability, uncontrolled separation, or Cascading within an Interconnection.

Requirement R3, Part 3.2.2 goes beyond the scope of what is documented in the SAR by requiring additional steady-state analysis after the steady-state and dynamic simulations show acceptable system response. The SAR specifically states that "[t]o ensure that a station is effectively identified as non-critical, registered entities need to have performed both steady-state and dynamic studies" but does not go into further detail about performing another steady-state analysis that includes any tripped Elements from the dynamic simulations. We suggest striking Requirement R3, Part 3.2.2.

Requirement R3, Part 3.3 could be further clarified and reference to proximity should be removed in favor the reference to R2, we suggest the following language:

3.3 For each applicable Transmission station or Transmission substation listed in accordance with Requirement R1, analysis shall include a Fault **in the simulation** at the applicable Transmission station or Transmission substation and **then at** each Transmission station or Transmission substation identified in accordance with Requirement R2.

Requirement R3, Part 3.4 is not clear as written. If the intention of the drafting team is for 3.4 to require fault simulations that assume the loss of communication and Protection System at all of the Transmission station(s) or Transmission substation(s) studied under Requirements R3, Parts 3.2 and 3.3 simultaneously, we suggest the following revision:

3.4. Fault simulations that assume the loss of communication and Protection System at **all of** the Transmission station(s) or Transmission substation(s) studied under Requirement R3, Parts 3.2 and 3.3.

EEI appreciates that drafting team's revision to Requirement R3, Part 3.4.2 to provide flexibility in the clearing times used, however, by stating "Actual or more conservative" entities will still need to calculate the actual clearing times in order to validate that the estimates are more conservative. We suggest:

3.4.2. Actual or conservative estimates of clearing times shall be used unless otherwise technically substantiated.

Likes 0	
Dislikes 0	

Response

TRACEY JOHNSON - Southern Indiana Gas and Electric Co. - 3,5,6 - RF

Answer	No
Document Name	

Comment

Southern Indiana Gas and Electric Company d/b/a CenterPoint Energy Indiana South (SIGE) supports the comments as submitted by Edison Electric Institute (EEI).

Likes 0	
Dislikes 0	

Response

Jennie Wike - Jennie Wike On Behalf of: John Merrell, Tacoma Public Utilities (Tacoma, WA), 1, 4, 5, 6, 3; - Jennie Wike, Group Name Tacoma Power

Answer	No
Document Name	

Comment

Tacoma Power supports the changes. However, there does not appear to be an existing requirement within TPL-008, TPL-001, or MOD-032 for a TO with a non-applicable substation to provide sufficient detail about backup relaying schemes to an adjacent TO in order to fulfill R3.2.1. We recommend the standard drafting team ensure there is adequate access to relaying information via a request chain from the TO to PC to adjacent PC to TO.

Likes 0	
Dislikes 0	
Response	
Dave Krueger - SERC Reliability Corporation - 10	
Answer	No
Document Name	
Comment	
SERC appreciates the ongoing efforts to refine the CIP-014 Risk Assessment portion of the standard. SERC believes the elimination of the specific details in previous requirements 3.4 and 3.5 and the use of the single word 'fault', that the standard has drifted from having clarity and consistency in the requirements of how such extreme events are simulated across different utilities, contrary to the specificity mentioned in SAR Scope item 3 and without explanation in the Technical Rationale for the change. There is also no visible consideration or measurement of the reliability risks of excluding certain fault types from these forward-looking studies, nor an ongoing mechanism in R3.3 for historic analysis of faults as proposed by some other commenters.	
Likes 0	
Dislikes 0	
Response	
Alan Kloster - Alan Kloster On Behalf of: Jeremy Harris, Evergy, 3, 5, 1, 6; Kevin Frick, Evergy, 3, 5, 1, 6; Marcus Moor, Evergy, 3, 5, 1, 6; Tiffany Lake, Evergy, 3, 5, 1, 6; - Alan Kloster	
Answer	No
Document Name	
Comment	
Evergy supports and incorporates by reference the comments of the Edison Electric Institute for question #3.	
Likes 0	
Dislikes 0	
Response	
Richard Vendetti - NextEra Energy - 5	
Answer	No
Document Name	
Comment	

NextEra supports the comments provided by EEI below:

EEI proposes the following revisions for consideration:

The term “proximity” is not used in Requirement R2. EEI suggests removing it from Requirement R3 and its sub parts.

R3. Each Transmission Owner shall have a documented risk assessment methodology, including criteria for steady-state and dynamic simulations, for evaluating the loss due to a physical attack of each applicable Transmission station(s) and Transmission substation(s) documented in Requirement R1 and Transmission substation(s) or Transmission station(s) determined to be in proximity per Requirement R2. The methodology shall include, at a minimum, the following:

Requirement R3, Parts 3.1 and 3.1.1 include duplicative concepts that could lead to confusion implementing and/or documenting the requirement parts. As an example, Requirement R3 requires the Transmission Owner to have a documented risk assessment methodology, including criteria for steady-state and dynamic simulations. Requirement R3, Part 3.1 requires the methodology to include technically supported thresholds and rationale, and Part 3.1.1 restates the requirement for the technical rationale to include steady-state and dynamic system response to events. EEI suggests consolidating the requirement parts as written below:

1.1 Technically supported thresholds and rationale for determining the amount of acceptable load loss, the amount of acceptable generation loss post-event response, and any additional considerations recognized as resulting in instability, uncontrolled separation, or Cascading within an Interconnection. The technical rationale shall include:

1.1.1 Steady-state and dynamic system response to events that could lead to load loss, generation loss, and other unacceptable post-event response

Requirement R3, Part 3.2.2 goes beyond the scope of what is documented in the SAR by requiring additional steady-state analysis after the steady-state and dynamic simulations show acceptable system response. The SAR specifically states that “[t]o ensure that a station is effectively identified as non-critical, registered entities need to have performed both steady-state and dynamic studies” but does not go into further detail about performing another steady-state analysis that includes any tripped Elements from the dynamic simulations. We suggest striking Requirement R3, Part 3.2.2.

Requirement R3, Part 3.3 could be further clarified and reference to proximity should be removed in favor the reference to R2, we suggest the following language:

3.3 For each applicable Transmission station or Transmission substation listed in accordance with Requirement R1, analysis shall include a Fault **in the simulation** at the applicable Transmission station or Transmission substation and **then at** each Transmission station or Transmission substation identified in accordance with Requirement R2 as being in proximity to the applicable Transmission station or Transmission substation.

Requirement R3, Part 3.4 is not clear as written. If the intention of the drafting team is for 3.4 to require fault simulations that assume the loss of communication and Protection System at all of the Transmission station(s) or Transmission substation(s) studied under Requirements R3, Parts 3.2 and 3.3 simultaneously, we suggest the following revision:

3.4. Fault simulations that assume the loss of communication and Protection System at **all of** the Transmission station(s) or Transmission substation(s) studied under Requirement R3, Parts 3.2 and 3.3.

EEI appreciates that drafting team’s revision to Requirement R3, Part 3.4.2 to provide flexibility in the clearing times used, however, by stating “Actual or more conservative” entities will still need to calculate the actual clearing times in order to validate that the estimates are more conservative. We suggest:

3.4.2. Actual or more conservative estimates of clearing times shall be used unless otherwise technically substantiated.

Likes 0	

Dislikes 0	

Response

Jamison Cawley - Nebraska Public Power District - 1	
Answer	No
Document Name	

Comment
Please provide more specificity around the clearing times referenced in R3.4. The phrase “more conservative estimates” is vague as it opens the door to different interpretations by various entities. A specific timeframe should be specified in cycles to clarify the intent of the Standard. There are two issues to consider, both being identified during a compliance audit. One issue considers loss of communications at the primary substation, and the other considers any adjacent or proximate substations. First, is the simulation intended to have a communication outage prior to a fault or simultaneous with the fault, and if not simultaneous how far in advance of the fault is the communications outage expected to occur (this issue was a point of contention during an audit)? Please clarify the language of the Standard regarding loss of communications for protection schemes and the timing of loss of communications between multiple substations. Second, regarding timing of loss of communications at adjacent substations, if an assessment methodology allows for pilot schemes to trip high speed without communications such as DCB lack of blocking signal or DCUB unblocking schemes when the guard signal is lost during the trip window allowing a highspeed trip this is technically substantiated. Additionally, the assumption of a simultaneous fault and/or loss of communications on each element of two adjacent substations, potentially up to ½ mile apart, seems impossible to technically justify and should not be required for the risk assessment. Please reconcile the phrase “more likely to contribute” in Requirement 3.2 with the phrase in 3.4, “technically substantiated”. Using the terminology “more likely” seems to invalidate any conditions that are “technically substantiated”, allowing nothing less than the instantaneous complete destruction of multiple substations. This is impractical. The NERC report on CIP-014 noted that NERC finds that the inconsistent approach to performing the risk assessment is largely due to a lack of specificity in the requirement language as to the nature and parameters of the risk assessment. Is it more likely all systems are inoperable or more likely just a few systems are inoperable? Several scenarios could exist which seems subjective and will still result in inconsistent approaches. Please add examples of various scenarios to address these issues.

Likes 0	
Dislikes 0	

Response

Lidija Efremova - Lidija Efremova On Behalf of: Emma Halilovic, Hydro One Networks, Inc., 1; - Lidija Efremova	
Answer	No
Document Name	

Comment

A 36month frequency of this standard has a shorter time cycle than some entities broader system studies which determine cascading, uncontrolled separations etc… in many regions the RC or ISOs perform these studies and provide results to the TO for use in CIP-014. These entities must also have to adjust their study cycle (which is very onerous) OR suggestion is to add a statement in the standard that allows the TO use their discretion with RC to use the most recent studies available.

Likes 0	
Dislikes 0	

Response

Rachel Schuldt - Black Hills Corporation - 6, Group Name Black Hills Corporation - All Segments

Answer	No
Document Name	

Comment

Black Hills Corporation agrees with EEI's suggestion to remove the word "proximity" from R3 to avoid using a term that is undefined in R2.

Black Hills Corporation also agrees with EEI's comment that R3 Part 3.1.1 duplicates the concepts in R3 Part 3.1. Therefore, R3 Part 3.1.1 is not needed.

Likes 0	
Dislikes 0	

Response

John Pearson - ISO New England, Inc. - 2

Answer	No
Document Name	

Comment

R3.3 should specify a three phase Fault to ensure consistency in performing studies. Also, see response to Question 2.

Likes 0	
Dislikes 0	

Response

Gail Elliott - Gail Elliott On Behalf of: Michael Moltane, International Transmission Company Holdings Corporation, 1; - Gail Elliott

Answer	No
Document Name	

Comment

ITC proposes the following revisions for consideration:

The term “proximity” is not used in Requirement R2. ITC suggests removing it from Requirement R3 and its sub parts.

R3. Each Transmission Owner shall have a documented risk assessment methodology, including criteria for steady-state and dynamic simulations, for evaluating the loss due to a physical attack of each applicable Transmission station(s) and Transmission substation(s) documented in Requirement R1 and Transmission substation(s) or Transmission station(s) determined to be in proximity per Requirement R2. The methodology shall include, at a minimum, the following:

Requirement R3, Parts 3.1 and 3.1.1 include duplicative concepts that could lead to confusion implementing and/or documenting the requirement parts. As an example, Requirement R3 requires the Transmission Owner to have a documented risk assessment methodology, including criteria for steady-state and dynamic simulations. Requirement R3, Part 3.1 requires the methodology to include technically supported thresholds and rationale, and Part 3.1.1 restates the requirement for the technical rationale to include steady-state and dynamic system response to events. ITC suggests consolidating the requirement parts as written below:

{C}a. {C}Thresholds for determining the amount of acceptable load loss, the amount of acceptable generation loss, and post-event response recognized as resulting in instability, uncontrolled separation, or Cascading within an Interconnection. The technical rationale shall include:

{C} i. Steady-state and dynamic system response to events that could lead to load loss, generation loss, and other unacceptable post-event response

Requirement R3.2 ITC recommends that the phrase (that are more likely to contribute to) be deleted from the requirement. This is subjective and could lead to violations if your ERO disagreed with what you determined was not a more likely scenario as appropriate for your studies.

Requirement R3, Part 3.2.2 goes beyond the scope of what is documented in the SAR by requiring additional steady-state analysis after the steady-state and dynamic simulations show acceptable system response. The SAR specifically states that “[t]o ensure that a station is effectively identified as non-critical, registered entities need to have performed both steady-state and dynamic studies” but does not go into further detail about performing another steady-state analysis that includes any tripped Elements from the dynamic simulations. We recommend striking Requirement R3, Part 3.2.2.

Requirement R3, Part 3.3 could be further clarified and reference to proximity should be removed in favor the reference to R2, we suggest the following language:

3.3 For each applicable Transmission station or Transmission substation listed in accordance with Requirement R1, analysis shall include a Fault **in the simulation** at both the applicable Transmission station or Transmission substation and **at** each associated Transmission station or Transmission substation identified in accordance with Requirement R2 as being in proximity to the applicable Transmission station or Transmission substation.

Requirement R3, Part 3.4 is not clear as written. If the intention of the drafting team is for 3.4 to require fault simulations that assume the loss of communication and Protection System at all of the Transmission station(s) or Transmission substation(s) studied under Requirements R3, Parts 3.2 and 3.3 simultaneously, we suggest the following revision:

3.4. Fault simulations that assume the loss of communication and Protection System at **all of** the Transmission station(s) or Transmission substation(s) studied under Requirement R3, Parts 3.2 and 3.3. The TO shall identify the clearing times utilized for the required studies.

ITC recommends that both 3.4.1 and 3.4.2 are too prescriptive. An estimate of clearing times is typically used for dynamics studies to alleviate the administrative burden of identifying the expected clearing times for each specific scenario being analyzed.

ITC appreciates that drafting team’s revision to Requirement R3, Part 3.4.2 to provide flexibility in the clearing times used, however, by stating “Actual or more conservative” entities will still need to calculate the actual clearing times in order to validate that the estimates used were more conservative. We suggest the following if the DT believes this is essential:

3.4.2. Actual or more conservative estimates of clearing times shall be used.

Likes 0	
Dislikes 0	

Response

Alison Nickells - NiSource - Northern Indiana Public Service Co. - 1	
Answer	No
Document Name	

Comment

NIPSCO agrees with EEI comments:

"The term "proximity" is not used in Requirement R2. EEI suggests removing it from Requirement R3 and its sub parts.

R3. Each Transmission Owner shall have a documented risk assessment methodology, including criteria for steady-state and dynamic simulations, for evaluating the loss due to a physical attack of each

applicable Transmission station(s) and Transmission substation(s) documented in Requirement R1 and Transmission substation(s) or Transmission station(s) determined per Requirement R2. The methodology shall include, at a minimum, the following:

Requirement R3, Parts 3.1 and 3.1.1 include duplicative concepts that could lead to confusion implementing and/or documenting the requirement parts. As an example, Requirement R3 requires the Transmission Owner to have a documented risk assessment methodology, including criteria for steady-state and dynamic simulations. Requirement R3, Part 3.1 requires the methodology to include technically supported thresholds and rationale, and Part 3.1.1 restates the requirement for the technical rationale to include steady-state and dynamic system response to events. EEI suggests consolidating the requirement parts as written below:

3.1 Technically supported thresholds and rationale for determining the amount of acceptable load loss, the amount of acceptable generation loss post-event response, and any additional considerations recognized as resulting in instability, uncontrolled separation, or Cascading within an Interconnection.

Requirement R3, Part 3.2.2 goes beyond the scope of what is documented in the SAR by requiring additional steady-state analysis after the steady-state and dynamic simulations show acceptable system response. The SAR specifically states that "[t]o ensure that a station is effectively identified as non-critical, registered entities need to have performed both steady-state and dynamic studies" but does not go into further detail about performing another steady-state analysis that includes any tripped Elements from the dynamic simulations. We suggest striking Requirement R3, Part 3.2.2.

Requirement R3, Part 3.3 could be further clarified and reference to proximity should be removed in favor the reference to R2, we suggest the following language:

*3.3 For each applicable Transmission station or Transmission substation listed in accordance with Requirement R1, analysis shall include a Fault **in the simulation** at the applicable Transmission station or Transmission substation and **then at** each Transmission station or Transmission substation identified in accordance with Requirement R2.*

Requirement R3, Part 3.4 is not clear as written. If the intention of the drafting team is for 3.4 to require fault simulations that assume the loss of communication and Protection System at all of the Transmission station(s) or Transmission substation(s) studied under Requirements R3, Parts 3.2 and 3.3 simultaneously, we suggest the following revision:

*3.4. Fault simulations that assume the loss of communication and Protection System at **all of** the Transmission station(s) or Transmission substation(s) studied under Requirement R3, Parts 3.2 and 3.3.*

EEI appreciates that drafting team's revision to Requirement R3, Part 3.4.2 to provide flexibility in the clearing times used, however, by stating "Actual or more conservative" entities will still need to calculate the actual clearing times in order to validate that the estimates are more conservative. We suggest:

3.4.2. Actual or conservative estimates of clearing times shall be used unless otherwise technically substantiated."

NIPSCO agrees with NV Energy comments:

The open-ended nature of "physical attack" results in very different interpretations of severity and subsequent protection system fault modeling results. This could be especially true depending on substation locations and inherent risk differences throughout the country. Clarify if the decisions to the questions above are left up to each company and their own assessment methodology?

Add examples to the rationale to address the various scenarios involving a substation under study and any adjacent substations meeting the ½ mile proximity. For example: Are they faulted simultaneously or individually with or without the same damage or inoperability? Are these questions up to each individual assessment methodology?

Likes 0	
Dislikes 0	

Response

Kelley Sargent - Puget Sound Energy, Inc. - 3

Answer	No
Document Name	

Comment

The standard needs to be prescriptive on amount of load loss/generation loss that may impact an Interconnection (i.e. result in instability, uncontrolled separation or Cascading within an Interconnection). Sometimes loss of large spot loads (data centers etc.) may not represent a general wide area outage in an interconnection; and number of customers or area distribution substations may provide better representation of a wide area outage/blackout.

Likes 0	
Dislikes 0	

Response

Robert Blackney - Edison International - Southern California Edison Company - 1

Answer	No
Document Name	

Comment

See comments submitted by EEI.

Likes 0	

Dislikes 0	
Response	
Selene Willis - Edison International - Southern California Edison Company - 5	
Answer	No
Document Name	
Comment	
See EEI Comments	
Likes 0	
Dislikes 0	
Response	
Israel Perez - Israel Perez On Behalf of: Laura Somak, Salt River Project, 3, 6, 5, 1; Mathew Weber, Salt River Project, 3, 6, 5, 1; Thomas Johnson, Salt River Project, 3, 6, 5, 1; Timothy Singh, Salt River Project, 3, 6, 5, 1; - Israel Perez	
Answer	No
Document Name	
Comment	
Salt River Project (SRP) agrees with EEI's suggestion to remove the word "proximity" from R3 to avoid using a term that is undefined in R2, and that R3 Part 3.1.1 duplicates the concepts in R3 Part 3.1.	
Likes 0	
Dislikes 0	
Response	
Stefanie Burke - Portland General Electric Co. - 6	
Answer	No
Document Name	
Comment	
PGE supports the comments of EEI.	
Likes 0	
Dislikes 0	

Response	
Brian Millard - Tennessee Valley Authority - 1,3,5,6 - SERC, Group Name TVA RBB	
Answer	Yes
Document Name	
Comment	
The standard clearly defines the expectation of what events to perform for steady state and dynamic simulations.	
Likes 0	
Dislikes 0	

Response	
Mark Garza - FirstEnergy - FirstEnergy Corporation - 4, Group Name FE Voter	
Answer	Yes
Document Name	
Comment	
FirstEnergy has no concerns with the proposed R3 for CIP-014-4.	
Likes 0	
Dislikes 0	

Response	
Devin Shines - PPL - Louisville Gas and Electric Co. - 1,3,5,6 - SERC,RF	
Answer	Yes
Document Name	
Comment	
LG&E/KU supports the modifications in Requirement R3, but notes three non-substantive corrections. First, Requirement R3 Part 3.1.1 is redundant with Part 3.1 and could be removed. Second, “Protection System” in Requirement R3 Part 3.4 should be “Protection Systems”. Third, Requirement R3 Part 3.4 incorrectly states “… studied under Requirement R3, Parts 3.2 and 3.3.” It should only reference Part 3.3 since all Faults are now described in the same Part.	
Likes 0	
Dislikes 0	

Response	
Carver Powers - Utility Services, Inc. - 4	
Answer	Yes
Document Name	
Comment	
Was the intent to have the responsible entity establish their own “acceptable load loss.” In other cases, it is up to the BA, RC, or RP to determine the Facility’s acceptable load loss.	
Likes 0	
Dislikes 0	
Response	
Daniel Gacek - Exelon - 1	
Answer	Yes
Document Name	
Comment	
Exelon agrees R3 addresses issues identified in the SAR, however, the term “Fault” is overly broad in the Draft 2 revision and does not provide the clarity directed by the SAR. Exelon prefers the Draft 1 version of R3 with the faults specified as at the highest voltage level, and with the fault magnitudes provided as specific fault types. The Draft 1 version of R3 provided criteria that created the “consistency of approach” the SAR is intended to achieve. Submitted on behalf of Exelon - Segments 1 & 3	
Likes 0	
Dislikes 0	
Response	
Dwanique Spiller - Berkshire Hathaway - NV Energy - 5	
Answer	Yes
Document Name	
Comment	

NV Energy appreciates moving most of the granular specifications of R3.1 to the Technical Rationale. NV Energy would prefer that these were also removed from the Technical Rationale due to concern that an auditor may solely rely upon the Technical Rationale in interpreting R3.1 That could lead to circumstances in which an entity is held to compliance with the Technical Rationale rather than the actual language the of requirement."

Requirement R3.2 states "Steady-state and dynamic simulations shall be performed under System conditions that are **more likely** to contribute to instability, uncontrolled separation, or Cascading within an Interconnection". Please reconcile the statement in 3.2 how "more likely to contribute to instability, uncontrolled separation, or Cascading" clarifies "technically substantiated" in requirement 3.4. Using terminology such as "more likely" seems to remove the possibility to technically substantiate anything less than complete destruction of multiple substations. This seems impractical.

The NERC report on CIP-014 noted that NERC finds that the inconsistent approach to performing the risk assessment is largely due to a lack of specificity in the requirement language as to the nature and parameters of the risk assessment. For example, is the protection system "rendered inoperable" where no substation protection system would operate or instead just damaged where the secondary protection is inoperable but the primary still operates for the substation? Is it more likely all systems are inoperable or more likely just a few systems are inoperable? A huge number of scenarios could exist which seems very subjective and will still result in inconsistent approaches. Clarify if the decisions to these questions are left up to each company and their own assessment methodology?

Note: remove or damaged due to being redundant due to "rendered inoperable"

If an assessment methodology allows for pilot schemes to trip high speed without communications such as DCB lack of blocking signal or DCUB unblocking schemes when the guard signal is lost during the trip window allowing a highspeed trip, is this technically substantiated? Add some discussion in the technical rationale regarding loss of communications for protection schemes.

Likes 0	
Dislikes 0	

Response

Robert Jones - Seattle City Light - 4

Answer	Yes
Document Name	

Comment

The new R3 is acceptable, but we have a couple remaining concerns:

I'm still not sure how to determine "technically supported thresholds" for gen and load loss, outside of what results in " instability, uncontrolled separation, or Cascading." Are these intended to be seperate determinations?

In reference to 3.4 specifically, I appreciate the requirement being less prescriptive about how we run the study, but we have experienced disagreement with regulators about what type of physical attack we are supposed to simulating (i.e. "smoking crater" vs something more realistic). It would be nice to have some guidance here to help clear up the ambiguity so that we can choose the appropriate contingencies to run.

Likes 0	

Dislikes 0	

Response

Jennifer Mcnally - Duke Energy - 1,3,5,6 - Texas RE,SERC,RF	
Answer	Yes
Document Name	

Comment
Duke Energy supports the revisions to R3 from Draft 1. For additional clarity, we suggest the following language for R3.3 “For each applicable Transmission station or Transmission substation listed in accordance with Requirement R1, analysis shall include a Fault **in the simulation** at the applicable Transmission station or Transmission substation and **then at** each Transmission station or Transmission substation identified in accordance with Requirement R2 as being in proximity to the applicable Transmission station or Transmission substation.

Likes 0	
Dislikes 0	

Response

Ellese Murphy - Ellese Murphy On Behalf of: Katherine Street, Duke Energy , 5, 6, 1, 1; - Ellese Murphy	
Answer	Yes
Document Name	

Comment
Duke Energy supports the revisions to R3 from Draft 1. For additional clarity, we suggest the following language for R3.3 “For each applicable Transmission station or Transmission substation listed in accordance with Requirement R1, analysis shall include a Fault **in the simulation** at the applicable Transmission station or Transmission substation and **then at** each Transmission station or Transmission substation identified in accordance with Requirement R2 as being in proximity to the applicable Transmission station or Transmission substation.

Likes 0	
Dislikes 0	

Response

Matthew Nicklin - Southern Illinois Power Cooperative - 1,3,5 - SERC	
Answer	Yes
Document Name	

Comment

Likes 0	
Dislikes 0	
Response	
Donna Wood - Tri-State G and T Association, Inc. - 1	
Answer	Yes
Document Name	
Comment	
Likes 0	
Dislikes 0	
Response	
Sean Steffensen - IDACORP - Idaho Power Company - 1	
Answer	Yes
Document Name	
Comment	
Likes 0	
Dislikes 0	
Response	
Richard Jackson - U.S. Bureau of Reclamation - 1	
Answer	Yes
Document Name	
Comment	
Likes 0	
Dislikes 0	
Response	

Tim Kelley - Tim Kelley On Behalf of: Charles Norton, Sacramento Municipal Utility District, 3, 6, 4, 1, 5; Foung Mua, Sacramento Municipal Utility District, 3, 6, 4, 1, 5; Kevin Smith, Balancing Authority of Northern California, 1; Nicole Looney, Sacramento Municipal Utility District, 3, 6, 4, 1, 5; Ryder Couch, Sacramento Municipal Utility District, 3, 6, 4, 1, 5; Wei Shao, Sacramento Municipal Utility District, 3, 6, 4, 1, 5; - Tim Kelley, Group Name SMUD and BANC	
Answer	Yes
Document Name	
Comment	
Likes 0	
Dislikes 0	
Response	
Teresa Krabe - Lower Colorado River Authority - 5	
Answer	Yes
Document Name	
Comment	
Likes 0	
Dislikes 0	
Response	
James Baldwin - James Baldwin On Behalf of: Matt Lewis, Lower Colorado River Authority, 5, 1; - James Baldwin	
Answer	Yes
Document Name	
Comment	
Likes 0	
Dislikes 0	
Response	
Nick Leathers - Nick Leathers On Behalf of: David Jendras Sr, Ameren - Ameren Services, 3, 6, 1; - Nick Leathers	
Answer	Yes
Document Name	

Comment	
Likes 0	
Dislikes 0	
Response	
Scott Langston - Tallahassee Electric (City of Tallahassee, FL) - 1	
Answer	Yes
Document Name	
Comment	
Likes 0	
Dislikes 0	
Response	
Jodirah Green - ACES Power Marketing - 1,3,4,5,6 - MRO,WECC,Texas RE,SERC,RF, Group Name ACES Collaborators	
Answer	Yes
Document Name	
Comment	
Likes 0	
Dislikes 0	
Response	
Bob Cardle - Bob Cardle On Behalf of: Marco Rios, Pacific Gas and Electric Company, 3, 1, 5; Sandra Ellis, Pacific Gas and Electric Company, 3, 1, 5; Tyler Brun, Pacific Gas and Electric Company, 3, 1, 5; - Bob Cardle	
Answer	Yes
Document Name	
Comment	
Likes 0	
Dislikes 0	

Response	
Amy Wilke - American Transmission Company, LLC - 1	
Answer	Yes
Document Name	
Comment	
Likes 0	
Dislikes 0	
Response	
Rachel Coyne - Texas Reliability Entity, Inc. - 10	
Answer	
Document Name	
Comment	
Texas RE is concerned the proposed Requirement Part 3.3 language does not specify the type of fault conditions (line-to-ground fault or three-phase fault) criteria that needs to be studied. Texas RE is also concerned with the use of the NERC Glossary definition of Fault, as it does not include line-to-ground faults or three-phase faults. Not defining the type of fault leaves it open for inconsistent applicability by the Transmission Owners. The drafting team should consider specifying the fault type to be used in the simulations to capture the highest risk conditions. At minimum, 'Fault' should not be capitalized, but a clear definition of the required "fault" conditions to be studied should be developed in the standard itself to avoid inconsistency in the compliance and subsequent auditing process.	
Likes 0	
Dislikes 0	
Response	

4. Do you agree with the modifications made in CIP-014-4 with new Requirement R4 to address the issues identified in the SAR?

Israel Perez - Israel Perez On Behalf of: Laura Somak, Salt River Project, 3, 6, 5, 1; Mathew Weber, Salt River Project, 3, 6, 5, 1; Thomas Johnson, Salt River Project, 3, 6, 5, 1; Timothy Singh, Salt River Project, 3, 6, 5, 1; - Israel Perez

Answer	No
Document Name	

Comment

Salt River Project (SRP) supports Duke Energy's comment to clarify “owned by multiple Transmission Owners” and clarification on having elements at a station or substation with differing ownership and whether that would make or not make a station or substation jointly owned.

Likes 0	
Dislikes 0	

Response

Ellese Murphy - Ellese Murphy On Behalf of: Katherine Street, Duke Energy , 5, 6, 1, 1; - Ellese Murphy

Answer	No
Document Name	

Comment

Duke Energy requests additional clarification on “owned by multiple Transmission Owners” and requests that the team clarify that merely having elements at a station or substation with differing ownership would not make a station or substation jointly owned. If the Drafting team does intend thatelements from another Transmission Owner could classify a station or substation as “owned by multiple Transmission Owners”, what is the mechanism to ensure coordination occurs? Particularly if the visiting Transmission Owner does not have compliance in scope for CIP-014.

Likes 0	
Dislikes 0	

Response

Gail Elliott - Gail Elliott On Behalf of: Michael Moltane, International Transmission Company Holdings Corporation, 1; - Gail Elliott

Answer	No
Document Name	

Comment

The inclusion of R4 is not identified as needed in the NERC CIP-014 Report nor in the SAR for the project. The inclusion of this requirement leads to a number of questions that have not been clarified. If For an entity that has a station with multiple voltage areas including some that are not applicable to CIP-014, how would an entity determine if this would be considered a joint station. If the second TO only has facilities that would not be applicable to CIP-014 within the substation, would they have to identify joint responsibilities for these sites.

If this requirement is retained, ITC believes it would be prudent to only consider the CIP-014 applicable voltages in the station to determine if it would be a joint station.	
Likes 0	
Dislikes 0	
Response	
Jennifer Mcnally - Duke Energy - 1,3,5,6 - Texas RE,SERC,RF	
Answer	No
Document Name	
Comment	
Duke Energy requests additional clarification on “owned by multiple Transmission Owners” and requests that the team clarify that merely having elements at a station or substation with differing ownership would not make a station or substation jointly owned. If the Drafting team does intend that elements from another Transmission Owner could classify a station or substation as “owned by multiple Transmission Owners”, what is the mechanism to ensure coordination occurs? Particularly if the visiting Transmission Owner does not have compliance in scope for CIP-014.	
Likes 0	
Dislikes 0	
Response	
John Pearson - ISO New England, Inc. - 2	
Answer	No
Document Name	
Comment	
R4 should reference both R1 and R2. The modifed language is shown below: Each Transmission Owner with applicable Transmission station(s) and Transmission substation(s) per Requirement R1 and R2 owned by multiple Transmission Owners shall coordinate with those Transmission Owners to determine and document their individual and joint responsibilities for performing any required risk assessments per Requirement R5. *[VRF: Medium; Time-Horizon: Operations Planning, Long-term Planning]*	
Likes 0	
Dislikes 0	
Response	
Lidija Efremova - Lidija Efremova On Behalf of: Emma Halilovic, Hydro One Networks, Inc., 1; - Lidija Efremova	
Answer	No

Document Name	
Comment	
This section refers to Transmission owners coordinating with other transmission owners. Further clarification is needed to address how TO should coordinate activities with a GO which are both in 'proximity' to each other. Which standards does a GO need to follow and how can this be enforced by a TO.	
Likes 0	
Dislikes 0	
Response	
Jamison Cawley - Nebraska Public Power District - 1	
Answer	No
Document Name	
Comment	
Please provide additional details on the expected outcome of joint risk assessments. Is agreement of the results of the risk assessments between the entities required?	
Likes 0	
Dislikes 0	
Response	
Dave Krueger - SERC Reliability Corporation - 10	
Answer	No
Document Name	
Comment	
SERC appreciates the ongoing efforts to refine the CIP-014 Risk Assessment portion of the standard. SERC believes the coordination efforts in R4 should include R3 as well as R5, so that consistency and clarity in study results between multiple entity owners is maintained. In the case where all owners share the same R3 and R4 thresholds (such as in an RTO/ISO), only an acknowledgement of such would be needed to affirm consistency.	
Likes 0	
Dislikes 0	
Response	
Lucinda Bradshaw - Lucinda Bradshaw On Behalf of: Byron Booker, Oncor Electric Delivery, 1; - Lucinda Bradshaw	

Answer	No
Document Name	

Comment

As written, the revised R4 appears to indicate that each TO that owns a part of a Transmission station or a Transmission substation identified pursuant to the assessment required in R1 should coordinate with those other TOs to determine their “individual and joint responsibilities” for performing any required risk assessments. It appears that the subject TOs could agree that each TO can prepare its own risk assessment of the subject station. If that is not what the SDT intended, then R4 needs to be clarified to affirmatively state more clearly what is intended.

It also appears that R4 does not require that each of the TOs that owns a part of a Transmission station or a Transmission substation must use the same methodology in preparing its required risk assessment. Again, if that is not what the SDT intended, then R4 needs to be clarified to make any methodological requirements clear.

Fundamentally, there are two inherent assumptions in the revised R4: (1) that it will always be possible for a TO to coordinate with all other TOs owning a Transmission station or a Transmission substation; and (2) that those TOs will always be able to agree on the responsibilities for preparing any required risk assessments. Unfortunately, that will likely not always be the case. To address this possibility, R4 should be revised to allow a TO to perform its own required risk assessment if the TOs cannot agree on the responsibilities for performing the required risk assessments.

Likes 0	
Dislikes 0	

Response

Chantal Mazza - Chantal Mazza On Behalf of: Junji Yamaguchi, Hydro-Quebec (HQ), 1, 5; Nicolas Turcotte, Hydro-Quebec (HQ), 1, 5; - Chantal Mazza

Answer	No
Document Name	

Comment

Is the 36-month periodicity with regard to the coordination, the risk assessment, or both? We suggest adding that only changes in responsibilities of Joint substation or stations should be documented once every 36 months or attestation that no changes occurred in responsibilities during the 36-month period. At scale, these substation and stations can be an administrative burden due to the number of agreements an entity may have, and an overarching document may be a better solution for management of these agreements. We are unsure of the intended goal or end value of the requirement and would like clarification

Does the outcome of the risk assessment need to be agreed to by both parties of a Joint substation or station? Additional clarification on what is expected for the outcome of the coordinated risk assessment should be clarified.

Likes 0	
Dislikes 0	

Response

Stephen Stafford - Stephen Stafford On Behalf of: Greg Davis, Georgia Transmission Corporation, 1; - Stephen Stafford	
Answer	No
Document Name	
Comment	
The requirement is appropriate in the context that the referenced risk assessment is from a physical security perspective and not a transmission planning analysis perspective. Should the intent of this comment be applicable to physical security and not a transmission planning analysis, then our answer would be yes.	
Likes 0	
Dislikes 0	
Response	

Ruida Shu - Northeast Power Coordinating Council - 1,2,3,4,5,6,7,8,9,10 - NPCC, Group Name NPCC RSC	
Answer	No
Document Name	
Comment	
Is the 36-month periodicity with regard to the coordination, the risk assessment, or both? We suggest adding that only changes in responsibilities of Joint substation or stations should be documented once every 36 months or attestation that no changes occurred in responsibilities during the 36-month period. At scale, these substation and stations can be an administrative burden due to the number of agreements an entity may have, and an overarching document may be a better solution for management of these agreements. We are unsure of the intended goal or end value of the requirement and would like clarification Does the outcome of the risk assessment need to be agreed to by both parties of a Joint substation or station? Additional clarification on what is expected for the outcome of the coordinated risk assessment should be clarified.	
Likes 0	
Dislikes 0	
Response	

Gary Trezza - Long Island Power Authority - 1 - NPCC	
Answer	No
Document Name	
Comment	
It is recommended to add R2 (in addition to R1) to the language of R4 so as to clarify that coordination for “Transmission station(s) and Transmission substation(s), irrespective of ownership, within ½ mile of an applicable Transmission station or Transmission substation documented in Requirement R1” may be required - for situations where stations identified under R2 have different ownership.	

Likes 0	
Dislikes 0	
Response	
Nikki Carson-Marquis - Nikki Carson-Marquis On Behalf of: Theresa Allard, Minnkota Power Cooperative Inc., 1; - Nikki Carson-Marquis	
Answer	No
Document Name	
Comment	
MPC strongly disagrees with the use of a 36-month timeframe for utilities who have not previously identified stations or substations as critical for the same reasons specified in our comments for Question 5.	
Likes 0	
Dislikes 0	
Response	
Ronald Hoover - Bonneville Power Administration - 1,3,5,6 - WECC	
Answer	No
Document Name	
Comment	
BPA finds the current wording of R4 does not address the inclusions in R2 sub-requirements 2.1 and 2.2.	
Likes 0	
Dislikes 0	
Response	
Jeffrey Streifling - NB Power Corporation - 1	
Answer	No
Document Name	
Comment	
Is the 36-month periodicity with regard to the coordination, the risk assessment, or both? We suggest adding that only changes in responsibilities of Joint substation or stations should be documented once every 36 months or attestation that no changes occurred in responsibilities during the 36-month period. At scale, these substation and stations can be an administrative burden due to the number of agreements an entity may have, and an	

overarching document may be a better solution for management of these agreements. We are unsure of the intended goal or end value of the requirement and would like clarification

Does the outcome of the risk assessment need to be agreed to by both parties of a Joint substation or station? Additional clarification on what is expected for the outcome of the coordinated risk assessment should be clarified.

Likes 0	
Dislikes 0	

Response

Erin Wilson - NB Power Corporation - New Brunswick Power Transmission Corporation - 5

Answer	No
Document Name	

Comment

Is the 36-month periodicity with regard to the coordination, the risk assessment, or both? We suggest adding that only changes in responsibilities of Joint substation or stations should be documented once every 36 months or attestation that no changes occurred in responsibilities during the 36-month period. At scale, these substation and stations can be an administrative burden due to the number of agreements an entity may have, and an overarching document may be a better solution for management of these agreements. We are unsure of the intended goal or end value of the requirement and would like clarification

Does the outcome of the risk assessment need to be agreed to by both parties of a Joint substation or station? Additional clarification on what is expected for the outcome of the coordinated risk assessment should be clarified.

Likes 0	
Dislikes 0	

Response

Kevin Conway - Western Power Pool - 4

Answer	No
Document Name	

Comment

Transmission Owners who are identified in R1 do not have to be coordinate if they do not have facilities as identified in Attachment 1. The reference to R5 should be deleted and language such as "...their individual and joint responsibilities for performing any required risk assessments per this standard."

Has the drafting team considered where two substations are in close proximity together and where a single event can affect both substations: however, one is owned by an applicable entity under R1, and the other is not?

Likes 0	
Dislikes 0	

Response	
Selene Willis - Edison International - Southern California Edison Company - 5	
Answer	Yes
Document Name	
Comment	
See EEI Comments	
Likes 0	
Dislikes 0	
Response	
Robert Blackney - Edison International - Southern California Edison Company - 1	
Answer	Yes
Document Name	
Comment	
See comments submitted by EEI.	
Likes 0	
Dislikes 0	
Response	
TRACEY JOHNSON - Southern Indiana Gas and Electric Co. - 3,5,6 - RF	
Answer	Yes
Document Name	
Comment	
Southern Indiana Gas and Electric Company d/b/a CenterPoint Energy Indiana South (SIGE) supports the comments as submitted by Edison Electric Institute (EEI).	
Likes 0	
Dislikes 0	
Response	

Dwanique Spiller - Berkshire Hathaway - NV Energy - 5	
Answer	Yes
Document Name	
Comment	
NV Energy appreciates the removal of a periodicity requirement.	
Likes 0	
Dislikes 0	
Response	
Kristine Martz - Edison Electric Institute - NA - Not Applicable - NA - Not Applicable	
Answer	Yes
Document Name	
Comment	
EEI agrees with the modifications made to CIP-014-04 Requirement R4.	
Likes 0	
Dislikes 0	
Response	
Clay Walker - Clay Walker On Behalf of: Robert Hirchak, Cleco Corporation, 6, 5, 1, 3; - Clay Walker	
Answer	Yes
Document Name	
Comment	
Cleco agrees with EEI comments.	
Likes 0	
Dislikes 0	
Response	
Matt Carden - Southern Company - Southern Company Services, Inc. - 1	
Answer	Yes

Document Name	
Comment	
Southern Company agrees with the modifications.	
Likes 0	
Dislikes 0	
Response	
Mark Garza - FirstEnergy - FirstEnergy Corporation - 4, Group Name FE Voter	
Answer	Yes
Document Name	
Comment	
FirstEnergy has no concerns with the proposed R4 for CIP-014-4.	
Likes 0	
Dislikes 0	
Response	
Leshel Hutchings - AEP - 3	
Answer	Yes
Document Name	
Comment	
None	
Likes 0	
Dislikes 0	
Response	
Stefanie Burke - Portland General Electric Co. - 6	
Answer	Yes
Document Name	

Comment	
Likes 0	
Dislikes 0	
Response	
Amy Wilke - American Transmission Company, LLC - 1	
Answer	Yes
Document Name	
Comment	
Likes 0	
Dislikes 0	
Response	
Bob Cardle - Bob Cardle On Behalf of: Marco Rios, Pacific Gas and Electric Company, 3, 1, 5; Sandra Ellis, Pacific Gas and Electric Company, 3, 1, 5; Tyler Brun, Pacific Gas and Electric Company, 3, 1, 5; - Bob Cardle	
Answer	Yes
Document Name	
Comment	
Likes 0	
Dislikes 0	
Response	
Kelley Sargent - Puget Sound Energy, Inc. - 3	
Answer	Yes
Document Name	
Comment	
Likes 0	
Dislikes 0	

Response	
Alison Nickells - NiSource - Northern Indiana Public Service Co. - 1	
Answer	Yes
Document Name	
Comment	
Likes 0	
Dislikes 0	
Response	
Jodirah Green - ACES Power Marketing - 1,3,4,5,6 - MRO,WECC,Texas RE,SERC,RF, Group Name ACES Collaborators	
Answer	Yes
Document Name	
Comment	
Likes 0	
Dislikes 0	
Response	
Scott Langston - Tallahassee Electric (City of Tallahassee, FL) - 1	
Answer	Yes
Document Name	
Comment	
Likes 0	
Dislikes 0	
Response	
Rachel Schuldt - Black Hills Corporation - 6, Group Name Black Hills Corporation - All Segments	
Answer	Yes
Document Name	

Comment	
Likes 0	
Dislikes 0	
Response	
Nick Leathers - Nick Leathers On Behalf of: David Jendras Sr, Ameren - Ameren Services, 3, 6, 1; - Nick Leathers	
Answer	Yes
Document Name	
Comment	
Likes 0	
Dislikes 0	
Response	
James Baldwin - James Baldwin On Behalf of: Matt Lewis, Lower Colorado River Authority, 5, 1; - James Baldwin	
Answer	Yes
Document Name	
Comment	
Likes 0	
Dislikes 0	
Response	
Teresa Krabe - Lower Colorado River Authority - 5	
Answer	Yes
Document Name	
Comment	
Likes 0	
Dislikes 0	
Response	

Richard Vendetti - NextEra Energy - 5	
Answer	Yes
Document Name	
Comment	
Likes 0	
Dislikes 0	
Response	
Alan Kloster - Alan Kloster On Behalf of: Jeremy Harris, Evergy, 3, 5, 1, 6; Kevin Frick, Evergy, 3, 5, 1, 6; Marcus Moor, Evergy, 3, 5, 1, 6; Tiffany Lake, Evergy, 3, 5, 1, 6; - Alan Kloster	
Answer	Yes
Document Name	
Comment	
Likes 0	
Dislikes 0	
Response	
Jennie Wike - Jennie Wike On Behalf of: John Merrell, Tacoma Public Utilities (Tacoma, WA), 1, 4, 5, 6, 3; - Jennie Wike, Group Name Tacoma Power	
Answer	Yes
Document Name	
Comment	
Likes 0	
Dislikes 0	
Response	
Robert Jones - Seattle City Light - 4	
Answer	Yes
Document Name	

Comment	
Likes 0	
Dislikes 0	
Response	
Daniel Gacek - Exelon - 1	
Answer	Yes
Document Name	
Comment	
Likes 0	
Dislikes 0	
Response	
Andrew Smith - APS - Arizona Public Service Co. - 5	
Answer	Yes
Document Name	
Comment	
Likes 0	
Dislikes 0	
Response	
Diana Aguas - CenterPoint Energy Houston Electric, LLC - 1 - Texas RE	
Answer	Yes
Document Name	
Comment	
Likes 0	
Dislikes 0	
Response	

Tim Kelley - Tim Kelley On Behalf of: Charles Norton, Sacramento Municipal Utility District, 3, 6, 4, 1, 5; Foung Mua, Sacramento Municipal Utility District, 3, 6, 4, 1, 5; Kevin Smith, Balancing Authority of Northern California, 1; Nicole Looney, Sacramento Municipal Utility District, 3, 6, 4, 1, 5; Ryder Couch, Sacramento Municipal Utility District, 3, 6, 4, 1, 5; Wei Shao, Sacramento Municipal Utility District, 3, 6, 4, 1, 5; - Tim Kelley, Group Name SMUD and BANC	
Answer	Yes
Document Name	
Comment	
Likes 0	
Dislikes 0	
Response	
Carver Powers - Utility Services, Inc. - 4	
Answer	Yes
Document Name	
Comment	
Likes 0	
Dislikes 0	
Response	
Jessica Cordero - Unisource - Tucson Electric Power Co. - 1	
Answer	Yes
Document Name	
Comment	
Likes 0	
Dislikes 0	
Response	
Amy Wesselkamper - PNM Resources - Public Service Company of New Mexico - 3	
Answer	Yes

Document Name	
Comment	
Likes 0	
Dislikes 0	
Response	
Richard Jackson - U.S. Bureau of Reclamation - 1	
Answer	Yes
Document Name	
Comment	
Likes 0	
Dislikes 0	
Response	
Sean Steffensen - IDACORP - Idaho Power Company - 1	
Answer	Yes
Document Name	
Comment	
Likes 0	
Dislikes 0	
Response	
Devin Shines - PPL - Louisville Gas and Electric Co. - 1,3,5,6 - SERC,RF	
Answer	Yes
Document Name	
Comment	
Likes 0	
Dislikes 0	

Response	
Donna Wood - Tri-State G and T Association, Inc. - 1	
Answer	Yes
Document Name	
Comment	
Likes 0	
Dislikes 0	
Response	
Rebika Yitna - Rebika Yitna On Behalf of: Roger Brand, MEAG Power, 3, 1; - Rebika Yitna	
Answer	Yes
Document Name	
Comment	
Likes 0	
Dislikes 0	
Response	
Rachel Coyne - Texas Reliability Entity, Inc. - 10	
Answer	Yes
Document Name	
Comment	
Likes 0	
Dislikes 0	
Response	
Ben Hammer - Western Area Power Administration - 1	
Answer	Yes
Document Name	

Comment	
Likes 0	
Dislikes 0	
Response	
Joshua London - Eversource Energy - 1, Group Name Eversource	
Answer	Yes
Document Name	
Comment	
Likes 0	
Dislikes 0	
Response	
James Keele - Entergy - 3	
Answer	Yes
Document Name	
Comment	
Likes 0	
Dislikes 0	
Response	
Matthew Nicklin - Southern Illinois Power Cooperative - 1,3,5 - SERC	
Answer	Yes
Document Name	
Comment	
Likes 0	
Dislikes 0	
Response	

Tamarra Hardie - Tamarra Hardie On Behalf of: Diane E Landry, Public Utility District No. 1 of Chelan County, 3, 5, 1, 6; - Public Utility District No. 1 of Chelan County - 6, Group Name CHPD	
Answer	Yes
Document Name	
Comment	
Likes 0	
Dislikes 0	
Response	
Mark Flanary - Midwest Reliability Organization - 10	
Answer	Yes
Document Name	
Comment	
Likes 0	
Dislikes 0	
Response	
Brian Millard - Tennessee Valley Authority - 1,3,5,6 - SERC, Group Name TVA RBB	
Answer	Yes
Document Name	
Comment	
Likes 0	
Dislikes 0	
Response	

5. Do you agree with the modifications made in CIP-014-4 with adding Requirement R5 to address the issues identified in the SAR?	
Kevin Conway - Western Power Pool - 4	
Answer	No
Document Name	
Comment	
This goes back to R1 where ALL TOPs should be required to meet R1 (every 36 months), and only those who have Facilities that meet Attachment 1 will be responsible for meeting compliance to the rest of the Standard. As written, entities may find they are exempt from the proposed standard initially, and there is no requirement for them to re-evaluate their applicability.	
Likes 0	
Dislikes 0	
Response	
Erin Wilson - NB Power Corporation - New Brunswick Power Transmission Corporation - 5	
Answer	No
Document Name	
Comment	
We suggest adding language about required actions where a TO designate another entity's Control Center in part 5.2. for instance, coordination between the entities and information security.	
Likes 0	
Dislikes 0	
Response	
Jeffrey Streifling - NB Power Corporation - 1	
Answer	No
Document Name	
Comment	
We suggest adding language about required actions where a TO designate another entity's Control Center in part 5.2. for instance, coordination between the entities and information security.	
Likes 0	

Dislikes 0	

Response

Tamarra Hardie - Tamarra Hardie On Behalf of: Diane E Landry, Public Utility District No. 1 of Chelan County, 3, 5, 1, 6; - Public Utility District No. 1 of Chelan County - 6, Group Name CHPD

Answer	No
Document Name	

Comment
It is recommended to also update the R5 VRF to reference the Near-Term Transmission Planning Horizon instead of the Long-Term Transmission Planning Horizon. The R5 VRF Time Horizon still states it applies to 'Long-term Planning Horizon', whereas the NERC Glossary of Terms defines the 'Near-Term Planning Horizon' as the window covering year 1 through 5. This requirement references 'at least once every 36 calendar months', so it is recommended that the R5 VRF Time Horizon language is updated to reference the 'Near-Term Transmission Planning Horizon'. Otherwise, the changes are generally good.

Likes 0	
Dislikes 0	

Response

Joshua London - Eversource Energy - 1, Group Name Eversource

Answer	No
Document Name	

Comment
Was "previously" meant to be struck in R5.1? The intent of this section was believed to be that if a station was previously found to be impactful, it does not have to be restudied; is that not the case? Requirement R5.3 should be added stating something similar to "Multiple Transmission Owners of stations within proximity as determined in R2 shall share the results of their analyses related to the stations within proximity with all the other Transmission Owners of the stations within proximity."

Likes 0	
Dislikes 0	

Response

Nikki Carson-Marquis - Nikki Carson-Marquis On Behalf of: Theresa Allard, Minnkota Power Cooperative Inc., 1; - Nikki Carson-Marquis

Answer	No
Document Name	

Comment
MPC strongly disagrees with the use of a 36-month timeframe for utilities who have not previously identified any substations as critical as it is both outside the scope of the SAR and will lead to increased study costs with little or no benefit to BES reliability. During the 6/7/24 NERC webinar for Draft 1, the SDT stated the goal of changing the risk assessment timeframe to 36 months was to align the CIP-014 risk assessment with the model build timeframe of another standard. Later, MPC requested clarification on which standard the SDT is aligning with during the 10/17/24 industry webinar, and the SDT indicated it aligns with the 12-month timeframe of the TPL-001 standard. The CIP-014 analysis does not depend on the models built for TPL-001, and MPC believes changing the CIP-014 study timing to align with the TPL-001 model build process provides no additional reliability benefit to the BES for entities that have not identified critical stations/substations. Furthermore, the existing 60-month timeframe can also align with the 12-month model build timeframe of the TPL-001 standard. Stations and substations planned to be in service within 24 months of the CIP-014 risk assessment are already required to be included under R1 of CIP-014-3 (or within 36 months with proposed CIP-014-4 R1), which suggests that decreasing the risk assessment timeframe from 60 months to 36 months is very unlikely to identify stations or substations that would not already be identified under CIP-014 R1. Moreover, the very slow pace of construction of new electrical infrastructure due to increased equipment lead times, supply chain constraints, and labor shortages makes it highly unlikely that modifications to an existing non-critical Transmission station or substation could be planned, designed, and constructed such that it would be elevated to a critical station/substation within 36 months. It is equally unlikely that a newly constructed CIP-014 critical substation would be completed within this timeframe. For utilities who have previously not identified substations as critical, reducing the risk assessment timeframe from 60 months to 36 months will result in increased costs due to more frequent risk assessments, with the more frequent assessments having no reliability benefit as they have little to no chance of identifying more Transmission stations or substations as CIP-014 critical that would not already have been under the CIP-014-3 Standard.

Likes 0	
Dislikes 0	

Response

Gary Trezza - Long Island Power Authority - 1 - NPCC	
Answer	No
Document Name	

Comment
Was “previously” meant to be struck in R5.1? The intent of this section was believed to be that if a station was previously found to be impactful, it does not have to be restudied; is that not the case? It is recommended that a new “Requirement R5.3” be added stating something similar to “Multiple Transmission Owners of stations within proximity as determined in R2 shall share the results of their analyses related to the stations within proximity with all the other Transmission Owners of the stations within proximity.”

Likes 0	
Dislikes 0	
Response	
Matt Carden - Southern Company - Southern Company Services, Inc. - 1	
Answer	No
Document Name	
Comment	
Southern Company agrees with the intent of this requirement. However, as it is presently written, the requirement only applies to jointly owned Transmission station(s) and Transmission substation(s). Consider the below modifications: R5. At least once every 36 calendar months, each Transmission Owner shall perform a risk assessment to identify Transmission station(s) and Transmission substation(s) that if rendered inoperable or damaged as a result of a physical attack could result in instability, uncontrolled separation, or Cascading within an Interconnection, using the methodology established in Requirement R3 including any Transmission station(s) and Transmission substation(s) identified in accordance with documentation established per Requirements R1, R2, and R4.	
Likes 0	
Dislikes 0	
Response	
Jessica Cordero - Unisource - Tucson Electric Power Co. - 1	
Answer	No
Document Name	
Comment	
Does not provide an option for de-classification of a Transmission Substation from critical to non-critical. Additional projects could provide more resiliency to the BES that could result in a substation no longer causing instability, uncontrolled separation, or Cascading within an Interconnection when rendered inoperable or damaged as a result of a physical attack. Language R5.1 does not provide additional value and is confusing. How many assessments can be skipped for a specific site identified that causes instability, uncontrolled separation, or Cascading within an Interconnection when rendered inoperable or damaged as a result of a physical attack? The current language implies that a site that is initially identified as causing instability, uncontrolled separation, or Cascading within an Interconnection never needs to be re-evaluated in any future risk assessments.	
Likes 0	
Dislikes 0	
Response	

Ruida Shu - Northeast Power Coordinating Council - 1,2,3,4,5,6,7,8,9,10 - NPCC, Group Name NPCC RSC	
Answer	No
Document Name	
Comment	

We suggest adding language about required actions where a TO designate another entity's Control Center in part 5.2. for instance, coordination between the entities and information security.

Was "previously" meant to be struck in R5.1? The intent of this section was believed to be that if a station was previously found to be impactful, it does not have to be restudied; is that not the case?

Requirement R5.3 should be added stating something similar to "Multiple Transmission Owners of stations within proximity as determined in R2 shall share the results of their analyses related to the stations within proximity with all the other Transmission Owners of the stations within proximity."

Likes 0	
Dislikes 0	
Response	

Stephen Stafford - Stephen Stafford On Behalf of: Greg Davis, Georgia Transmission Corporation, 1; - Stephen Stafford	
Answer	No
Document Name	
Comment	

There is no issue with performing a risk assessment every 36 months.

Reference responses to the previous questions on R3 & R4 regarding the appropriateness of the planning study being governed in the TPL space and not within CIP-014.

Likes 0	
Dislikes 0	
Response	

Diana Aguas - CenterPoint Energy Houston Electric, LLC - 1 - Texas RE	
Answer	No
Document Name	
Comment	

CEHE agrees with EEI's comments on clarification of Requirement 5.1 if a Transmission station or substation will need to be restudied every 36 calendar months after it's been already identified or keeping them on the list for a risk assessment is sufficient.

Likes 0	
Dislikes 0	
Response	
Chantal Mazza - Chantal Mazza On Behalf of: Junji Yamaguchi, Hydro-Quebec (HQ), 1, 5; Nicolas Turcotte, Hydro-Quebec (HQ), 1, 5; - Chantal Mazza	
Answer	No
Document Name	
Comment	
We suggest adding language about required actions where a TO designate another entity's Control Center in part 5.2. for instance, coordination between the entities and information security. Was "previously" meant to be struck in R5.1? The intent of this section was believed to be that if a station was previously found to be impactful, it does not have to be restudied; is that not the case? Requirement R5.3 should be added stating something similar to "Multiple Transmission Owners of stations within proximity as determined in R2 shall share the results of their analyses related to the stations within proximity with all the other Transmission Owners of the stations within proximity."	
Likes 0	
Dislikes 0	
Response	
Lucinda Bradshaw - Lucinda Bradshaw On Behalf of: Byron Booker, Oncor Electric Delivery, 1; - Lucinda Bradshaw	
Answer	No
Document Name	
Comment	
Please see Oncor's comments in response to Question 1, above.	
Likes 0	
Dislikes 0	
Response	
Dave Krueger - SERC Reliability Corporation - 10	
Answer	No
Document Name	
Comment	

SERC appreciates the ongoing efforts to refine the CIP-014 Risk Assessment portion of the standard. SERC suggests the change from the phrase 'the primary control center' to 'each primary control center' to address real-world situations where different control centers may independently control different Elements within a Transmission station or substation.

Likes 0	
Dislikes 0	

Response

Jamison Cawley - Nebraska Public Power District - 1

Answer	No
Document Name	

Comment

We request clarification of the phrase "rendered inoperable or damaged". There seems to be an incongruity between a facility that is simply damaged and one that is rendered inoperable. The phrase "or damaged" indicates a less severe impact than "rendered inoperable", for instance just a portion of the substation may be damaged. We request definitions for "inoperable" and "damaged", as recommended by the NERC 2023 CIP-014 evaluation report, to provide clear intent of the risk assessment.

Please explain the technical basis for the change from 60 months (with no previous applicable substations identified) to 36 months for re-performance of the risk assessment. If no technical basis exists, we request the period be returned to the original 60 months. Reducing the period to 36 months will place additional burdens on Transmission Planners, which pulls resources from activities that are also important to grid reliability. Further, most significant EHV expansion projects which would alter the previous base case assumptions do not occur every 36 months and are more in line with 60-month construction periods.

Likes 0	
Dislikes 0	

Response

Nick Leathers - Nick Leathers On Behalf of: David Jendras Sr, Ameren - Ameren Services, 3, 6, 1; - Nick Leathers

Answer	No
Document Name	

Comment

R5.1: Ameren would like more clarity around what is meant by additional simulations.

Likes 0	
Dislikes 0	

Response

Jennifer Mcnally - Duke Energy - 1,3,5,6 - Texas RE,SERC,RF	
Answer	No
Document Name	
Comment	
Duke Energy supports the overall modifications made in R5 and also supports EEI's ask for additional clarity in 5.1. We believe that the Drafting Team intended that stations and substations that have already been identified and protected will not require further assessment or demonstration of stability issues but can simply remain as identified and protected sites within an entity's program.	
Likes 0	
Dislikes 0	
Response	

Gail Elliott - Gail Elliott On Behalf of: Michael Moltane, International Transmission Company Holdings Corporation, 1; - Gail Elliott	
Answer	No
Document Name	
Comment	
R5. At least once every 36 calendar months, each Transmission Owner shall perform a risk assessment to identify Transmission station(s) and Transmission substation(s) that if rendered inoperable or damaged as a result of a physical attack could result in instability, uncontrolled separation, or Cascading within an Interconnection, using the methodology established in Requirement R3 including any Transmission station(s) and Transmission substation(s) for its assessment identified in R1 and R2.	
Likes 0	
Dislikes 0	
Response	

Ellese Murphy - Ellese Murphy On Behalf of: Katherine Street, Duke Energy , 5, 6, 1, 1; - Ellese Murphy	
Answer	No
Document Name	
Comment	
Duke Energy supports the overall modifications made in R5 and also supports EEI's ask for additional clarity in 5.1. We believe that the Drafting Team intended that stations and substations that have already been identified and protected will not require further assessment or demonstration of stability issues but can simply remain as identified and protected sites within an entity's program.	
Likes 0	
Dislikes 0	

Response	
Israel Perez - Israel Perez On Behalf of: Laura Somak, Salt River Project, 3, 6, 5, 1; Mathew Weber, Salt River Project, 3, 6, 5, 1; Thomas Johnson, Salt River Project, 3, 6, 5, 1; Timothy Singh, Salt River Project, 3, 6, 5, 1; - Israel Perez	
Answer	No
Document Name	
Comment	
Salt River Project (SRP) agrees with EEI's comments on clarification of Requirement 5.1 if a Transmission station or substation will need to be restudied every 36 calendar months after it's been already identified or keeping them on the list for a risk assessment is sufficient.	
Likes 0	
Dislikes 0	
Response	
Ronald Hoover - Bonneville Power Administration - 1,3,5,6 - WECC	
Answer	Yes
Document Name	
Comment	
BPA has identified that the SAR does not include content for when a problem needs resolution when there is Joint Ownership of a substation. The SAR's purpose only states "Clarify how to account for adjacent Transmission stations or Transmission substations of differing ownership as well as for those Transmission stations or Transmission substations within line-of-sight to each other." BPA recommends adding clarification for problem resolution to account for unforeseen circumstances.	
Likes 0	
Dislikes 0	
Response	
Leshel Hutchings - AEP - 3	
Answer	Yes
Document Name	
Comment	
None	
Likes 0	

Dislikes 0	
Response	
Mark Garza - FirstEnergy - FirstEnergy Corporation - 4, Group Name FE Voter	
Answer	Yes
Document Name	
Comment	
For the Drafting Teams consideration: Clarification is needed regarding stations and substations identified in previous risk assessments as causing instability, uncontrolled separation, or Cascading within an interconnection when rendered inoperable or damaged as a result of a physical attack if those substations will need to be studied is subsequent risk assessments. In other words, once a station or substation has been identified as 'critical' can the TO assume it will continue to be 'critical' without having to assess it again?	
Likes 0	
Dislikes 0	
Response	
Ben Hammer - Western Area Power Administration - 1	
Answer	Yes
Document Name	
Comment	
Please provide clarity on the differences between "inoperable" and "damaged" as a result of a physical attack. Consider adding examples to address various scenarios involving both the substation under study and adjacent substations within the ½ mile proximity.	
Likes 0	
Dislikes 0	
Response	
Donna Wood - Tri-State G and T Association, Inc. - 1	
Answer	Yes
Document Name	
Comment	

Tri-State supports MRO NSRF Comments.

Likes 0	
Dislikes 0	

Response

Devin Shines - PPL - Louisville Gas and Electric Co. - 1,3,5,6 - SERC,RF

Answer	Yes
Document Name	

Comment

LG&E/KU supports the modifications in Requirement R5, but suggests two non-substantive clarifications.

First, in the main body of Requirement R5 clarify, "… using the methodology established in Requirement R3 [*including any Transmission station(s) and Transmission substation(s) identified*] **and, where appropriate,** in accordance with **the responsibilities** document[*ation establish*]ed per Requirement R4." As currently written, this sentence implies additional Transmission station(s) and Transmission substation(s) are identified in Requirement R4. However, Requirement R4 only establishes responsibilities for stations with multiple owners. The suggested clarification sharpens the connection between Requirements R4 and R5.

Second, in Requirement R5 Part 5.2 clarify, "… identified **as causing instability, uncontrolled separation, or Cascading within an Interconnection** in the Requirement R5 risk assessment." This Part previously said identified as "critical". Removing the undefined "critical" is a good change, but "identified" does not convey the same meaning on its own.

Likes 0	
Dislikes 0	

Response

Amy Wesselkamper - PNM Resources - Public Service Company of New Mexico - 3

Answer	Yes
Document Name	

Comment

PNM and TNMP support EEI comments.

Likes 0	
Dislikes 0	

Response

Clay Walker - Clay Walker On Behalf of: Robert Hirchak, Cleco Corporation, 6, 5, 1, 3; - Clay Walker	
Answer	Yes
Document Name	
Comment	
Cleco agrees with EEI comments.	
Likes 0	
Dislikes 0	
Response	
Kristine Martz - Edison Electric Institute - NA - Not Applicable - NA - Not Applicable	
Answer	Yes
Document Name	
Comment	
EEI asks the drafting team to consider adding clarity to the technical rationale describing what is intended by Requirement R5, Part 5.1 that states “A Transmission station or Transmission substation identified in dynamic or steady-state simulations as causing instability, uncontrolled separation, or Cascading within an Interconnection when rendered inoperable or damaged as a result of a physical attack does not require any additional simulations during the current risk assessment.” It is not clear if the intention is for those stations and substations to be reassessed every 36 calendar months if they’ve already been identified, or if keeping them on the list for applying CIP-014 protections is sufficient after their initial assessment.	
Likes 0	
Dislikes 0	
Response	
Dwanique Spiller - Berkshire Hathaway - NV Energy - 5	
Answer	Yes
Document Name	
Comment	
NV Energy appreciates the drafting team reverting to the “identified” language of previous versions for continuity with the remainder of the requirements that remain unchanged. Can the drafting team provide more clarity on what is meant by “if rendered inoperable or damaged as a result of a physical attack”? Rendered inoperable appears to indicate a more severe impact where “or damaged” seems much less severe such as just a portion of a substation system. It is also not clear if rendered inoperable or damaged refers to the substation transmission system or the control and protection systems or both. This is a fundamental source of confusion as to how protection system functions are impacted and how/where faults should be applied for these studies that will be acceptable to auditors. For example, are faults applied simultaneously to different voltage levels, or only at the local substation under	

attack, or all included elements one at a time? This would seem to depend on the type of attack and what is rendered inoperable or damaged. The NERC 2023 CIP-014 evaluation report noted that a criterion should also include defining “inoperable” or “damaged” substations such that the intent of the risk assessment is clear.

It is also unclear if the “physical attack” is on the primary transmission system such as occurring outside the fence remote to the substation or internal on the control house systems inside the substation, or if it is on all systems. An attack could mean there are explosives involved, gunshots remote from the substation, or invasive personnel onsite. Which of these are more likely? There should be more industry agreement on how an attack impacts a substation and the primary system and underlying control and protection systems. The open-ended nature of “physical attack” results in very different interpretations of severity and subsequent protection system fault modeling results. This could be especially true depending on substation locations and inherent risk differences throughout the country. Clarify if the decisions to the questions above are left up to each company and their own assessment methodology?

Add examples to the rationale to address the various scenarios involving a substation under study and any adjacent substations meeting the ½ mile proximity. For example: Are they faulted simultaneously or individually with or without the same damage or inoperability? Are these questions up to each individual assessment methodology?

Likes 0	
Dislikes 0	

Response

TRACEY JOHNSON - Southern Indiana Gas and Electric Co. - 3,5,6 - RF

Answer	Yes
Document Name	

Comment

Southern Indiana Gas and Electric Company d/b/a CenterPoint Energy Indiana South (SIGE) supports the comments as submitted by Edison Electric Institute (EEI).

Likes 0	
Dislikes 0	

Response

Alan Kloster - Alan Kloster On Behalf of: Jeremy Harris, Evergy, 3, 5, 1, 6; Kevin Frick, Evergy, 3, 5, 1, 6; Marcus Moor, Evergy, 3, 5, 1, 6; Tiffany Lake, Evergy, 3, 5, 1, 6; - Alan Kloster

Answer	Yes
Document Name	

Comment

Evergy supports and incorporates by reference the comments of the Edison Electric Institute for question #5.

Likes 0	

Dislikes 0	
Response	
Alison Nickells - NiSource - Northern Indiana Public Service Co. - 1	
Answer	Yes
Document Name	
Comment	
The R5 VRF Time Horizon still states it applies to ‘Long-term Planning Horizon’, whereas the NERC Glossary of Terms defines the ‘Near-Term Planning Horizon’ as the window covering year 1 through 5. This requirement references ‘at least once every 36 calendar months’, so it is recommended that the R5 VRF Time Horizon language is updated to reference the ‘Near-Term Transmission Planning Horizon’.	
Likes 0	
Dislikes 0	
Response	
Robert Blackney - Edison International - Southern California Edison Company - 1	
Answer	Yes
Document Name	
Comment	
See comments submitted by EEI.	
Likes 0	
Dislikes 0	
Response	
Selene Willis - Edison International - Southern California Edison Company - 5	
Answer	Yes
Document Name	
Comment	
See EEI Comments	
Likes 0	
Dislikes 0	

Response	
Brian Millard - Tennessee Valley Authority - 1,3,5,6 - SERC, Group Name TVA RBB	
Answer	Yes
Document Name	
Comment	
Likes 0	
Dislikes 0	
Response	
Mark Flanary - Midwest Reliability Organization - 10	
Answer	Yes
Document Name	
Comment	
Likes 0	
Dislikes 0	
Response	
Matthew Nicklin - Southern Illinois Power Cooperative - 1,3,5 - SERC	
Answer	Yes
Document Name	
Comment	
Likes 0	
Dislikes 0	
Response	
James Keele - Entergy - 3	
Answer	Yes
Document Name	

Comment	
Likes 0	
Dislikes 0	
Response	
Rachel Coyne - Texas Reliability Entity, Inc. - 10	
Answer	Yes
Document Name	
Comment	
Likes 0	
Dislikes 0	
Response	
Rebika Yitna - Rebika Yitna On Behalf of: Roger Brand, MEAG Power, 3, 1; - Rebika Yitna	
Answer	Yes
Document Name	
Comment	
Likes 0	
Dislikes 0	
Response	
Sean Steffensen - IDACORP - Idaho Power Company - 1	
Answer	Yes
Document Name	
Comment	
Likes 0	
Dislikes 0	
Response	

Richard Jackson - U.S. Bureau of Reclamation - 1	
Answer	Yes
Document Name	
Comment	
Likes 0	
Dislikes 0	
Response	
Carver Powers - Utility Services, Inc. - 4	
Answer	Yes
Document Name	
Comment	
Likes 0	
Dislikes 0	
Response	
Tim Kelley - Tim Kelley On Behalf of: Charles Norton, Sacramento Municipal Utility District, 3, 6, 4, 1, 5; Foung Mua, Sacramento Municipal Utility District, 3, 6, 4, 1, 5; Kevin Smith, Balancing Authority of Northern California, 1; Nicole Looney, Sacramento Municipal Utility District, 3, 6, 4, 1, 5; Ryder Couch, Sacramento Municipal Utility District, 3, 6, 4, 1, 5; Wei Shao, Sacramento Municipal Utility District, 3, 6, 4, 1, 5; - Tim Kelley, Group Name SMUD and BANC	
Answer	Yes
Document Name	
Comment	
Likes 0	
Dislikes 0	
Response	
Andrew Smith - APS - Arizona Public Service Co. - 5	
Answer	Yes

Document Name	
Comment	
Likes 0	
Dislikes 0	
Response	
Daniel Gacek - Exelon - 1	
Answer	Yes
Document Name	
Comment	
Likes 0	
Dislikes 0	
Response	
Robert Jones - Seattle City Light - 4	
Answer	Yes
Document Name	
Comment	
Likes 0	
Dislikes 0	
Response	
Jennie Wike - Jennie Wike On Behalf of: John Merrell, Tacoma Public Utilities (Tacoma, WA), 1, 4, 5, 6, 3; - Jennie Wike, Group Name Tacoma Power	
Answer	Yes
Document Name	
Comment	
Likes 0	

Dislikes 0	
Response	
Teresa Krabe - Lower Colorado River Authority - 5	
Answer	Yes
Document Name	
Comment	
Likes 0	
Dislikes 0	
Response	
James Baldwin - James Baldwin On Behalf of: Matt Lewis, Lower Colorado River Authority, 5, 1; - James Baldwin	
Answer	Yes
Document Name	
Comment	
Likes 0	
Dislikes 0	
Response	
Lidija Efremova - Lidija Efremova On Behalf of: Emma Halilovic, Hydro One Networks, Inc., 1; - Lidija Efremova	
Answer	Yes
Document Name	
Comment	
Likes 0	
Dislikes 0	
Response	
Rachel Schuldt - Black Hills Corporation - 6, Group Name Black Hills Corporation - All Segments	
Answer	Yes

Document Name	
Comment	
Likes 0	
Dislikes 0	
Response	
Scott Langston - Tallahassee Electric (City of Tallahassee, FL) - 1	
Answer	Yes
Document Name	
Comment	
Likes 0	
Dislikes 0	
Response	
John Pearson - ISO New England, Inc. - 2	
Answer	Yes
Document Name	
Comment	
Likes 0	
Dislikes 0	
Response	
Jodirah Green - ACES Power Marketing - 1,3,4,5,6 - MRO,WECC,Texas RE,SERC,RF, Group Name ACES Collaborators	
Answer	Yes
Document Name	
Comment	
Likes 0	
Dislikes 0	

Response	
Kelley Sargent - Puget Sound Energy, Inc. - 3	
Answer	Yes
Document Name	
Comment	
Likes 0	
Dislikes 0	
Response	
Bob Cardle - Bob Cardle On Behalf of: Marco Rios, Pacific Gas and Electric Company, 3, 1, 5; Sandra Ellis, Pacific Gas and Electric Company, 3, 1, 5; Tyler Brun, Pacific Gas and Electric Company, 3, 1, 5; - Bob Cardle	
Answer	Yes
Document Name	
Comment	
Likes 0	
Dislikes 0	
Response	
Amy Wilke - American Transmission Company, LLC - 1	
Answer	Yes
Document Name	
Comment	
Likes 0	
Dislikes 0	
Response	
Stefanie Burke - Portland General Electric Co. - 6	
Answer	Yes

Document Name	
Comment	
Likes 0	
Dislikes 0	
Response	
Richard Vendetti - NextEra Energy - 5	
Answer	
Document Name	
Comment	
NextEra supports the comments provided by EEI below: EEI asks the drafting team to consider adding clarity to the technical rationale describing what is intended by Requirement R5, Part 5.1 that states “A Transmission station or Transmission substation identified in dynamic or steady-state simulations as causing instability, uncontrolled separation, or Cascading within an Interconnection when rendered inoperable or damaged as a result of a physical attack does not require any additional simulations during the current risk assessment.” It is not clear if the intention is for those stations and substations to be reassessed every 36 calendar months if they’ve already been identified, or if keeping them on the list for applying CIP-014 protections is sufficient after their initial assessment.	
Likes 0	
Dislikes 0	
Response	

6. Do you agree with the Implementation Plan for CIP-014-4?

Bob Cardle - Bob Cardle On Behalf of: Marco Rios, Pacific Gas and Electric Company, 3, 1, 5; Sandra Ellis, Pacific Gas and Electric Company, 3, 1, 5; Tyler Brun, Pacific Gas and Electric Company, 3, 1, 5; - Bob Cardle

Answer	No
Document Name	

Comment

The CIP-014-4 standard introduces a significant change by requiring the inclusion of stations within a 1/2-mile line of sight or easily accessible from a common roadway. However, the standard lacks clear guidelines for selecting stations. This could lead to inconsistencies and challenges in implementation, as different Transmission Owners and Transmission Operators may interpret and apply the criteria differently.

To improve clarity and ensure consistent implementation, the standard should provide more detailed guidance on the selection of stations, including specific criteria for evaluating lines of sight and ease of access from common roadways. This would help Transmission Owners and Transmission Operators to better understand the requirements and apply them consistently, ensuring the reliability and security of the electrical grid.

Likes 0	
Dislikes 0	

Response

Alison Nickells - NiSource - Northern Indiana Public Service Co. - 1

Answer	No
Document Name	

Comment

NIPSCO agrees with Southern CO:

It potentially could be excessively burdensome on a Transmission Owner (TO) to be required to perform a new risk assessment study within 24 months of the effective implementation date of the revised CIP-014-4 standard. Additionally, limited resources may be available to complete a verification within 90 days of the effective date per Requirement R6.

For example, given the current CIP-014-3 R1.1 30 calendar month subsequent risk assessment requirement schedule for a TO which has substations identified under R1, the TO may currently be required to complete a subsequent R1 study as of September 30, 2025.

If the revised standard has an effective implementation date of October 1, 2025, the TO would be required to complete a new R1 study within 24 months of October 1, 2025. A more effective and efficient

methodology is a phased approach based on the TO's completion date of the TO's most recent R1.1 subsequent risk assessment study.

Proposed Language: Each TO shall conduct its first assessment under CIP-014-4 within 36 calendar months after the effective date or within 36 calendar months after their last assessment under CIP-014-3, whichever occurs later.

Likes 0	

Dislikes 0	
Response	
Gail Elliott - Gail Elliott On Behalf of: Michael Moltane, International Transmission Company Holdings Corporation, 1; - Gail Elliott	
Answer	No
Document Name	
Comment	
For entities with facilities spread over many states that were constructed at significantly different times, the additional work included in this version will make it more complicated to complete by the effective date. Additional constraints with completing the required work will occur depending on the timing of their compliance with the existing version. An additional 6 months, or 30 months, would make this more feasible.	
Likes 0	
Dislikes 0	
Response	
TRACEY JOHNSON - Southern Indiana Gas and Electric Co. - 3,5,6 - RF	
Answer	No
Document Name	
Comment	
SIGE proposes to increase the implementation plan to 36 calendar months to align with the standard and give the industry more time to implement the changes in CIP-014-4.	
Likes 0	
Dislikes 0	
Response	
Lucinda Bradshaw - Lucinda Bradshaw On Behalf of: Byron Booker, Oncor Electric Delivery, 1; - Lucinda Bradshaw	
Answer	No
Document Name	
Comment	
N/A	
Likes 0	

Dislikes 0	
Response	
Diana Aguas - CenterPoint Energy Houston Electric, LLC - 1 - Texas RE	
Answer	No
Document Name	
Comment	
CEHE proposes to extend the implementation plan to 36 calendar months to align with the standard and give the industry more time to implement the changes in CIP-014-4.	
Likes 0	
Dislikes 0	
Response	
Stephen Stafford - Stephen Stafford On Behalf of: Greg Davis, Georgia Transmission Corporation, 1; - Stephen Stafford	
Answer	No
Document Name	
Comment	
There should be some period of time after the standard becomes effective before the risk assessment should be completed. The recommendation is within 24 months following the effective date of this standard.	
Likes 0	
Dislikes 0	
Response	
Jessica Cordero - Unisource - Tucson Electric Power Co. - 1	
Answer	No
Document Name	
Comment	
Recommending making CIP-014-4 effective 12 months after applicable government authority approval. The first assessment under CIP-014-4 shall be completed at the earlier of the following:	

- Within 30 calendar months of its previous risk assessment under CIP-014-3 if it identified one or more transmission stations or transmission substations that if rendered inoperable or damaged could result in instability, uncontrolled separation, or cascading within its interconnection in its last CIP-014-3 risk assessment;
- Within 60 calendar months of its previous risk assessment under CIP-014-3 if it did not identify any transmission stations or transmission substations that if rendered inoperable or damaged could result in instability, uncontrolled separation, or cascading within its interconnection in its last CIP-014-3 risk assessment;
- Within 24 months of the effective date of CIP-014-4.

Likes 0	
Dislikes 0	

Response

Amy Wesselkamper - PNM Resources - Public Service Company of New Mexico - 3

Answer	No
Document Name	

Comment

PNM and TNMP suggest phased implementation. For example >=24 months to comply with R1-R4 on or before effective date and “initial R5 risk assessment” some period, e.g. 12 calendar months, after effective date.

Likes 0	
Dislikes 0	

Response

Matt Carden - Southern Company - Southern Company Services, Inc. - 1

Answer	No
Document Name	

Comment

It potentially could be excessively burdensome on a Transmission Owner (TO) to be required to perform a new risk assessment study within 24 months of the effective implementation date of the revised CIP-014-4 standard. Additionally, limited resources may be available to complete a verification within 90 days of the effective date per Requirement R6.

For example, given the current CIP-014-3 R1.1 30 calendar month subsequent risk assessment requirement schedule for a TO which has substations identified under R1, the TO may currently be required to complete a subsequent R1 study as of September 30, 2025.

If the revised standard has an effective implementation date of October 1, 2025, the TO would be required to complete a new R1 study within 24 months of October 1, 2025. A more effective and efficient methodology is a phased approach based on the TO’s completion date of the TO’s most recent R1.1 subsequent risk assessment study.

Proposed Language: Each TO shall conduct its first assessment under CIP-014-4 within 36 calendar months after the effective date or within 36 calendar months after their last assessment under CIP-014-3, whichever occurs later.

Likes 0	
Dislikes 0	
Response	
Mark Garza - FirstEnergy - FirstEnergy Corporation - 4, Group Name FE Voter	
Answer	No
Document Name	
Comment	
FirstEnergy sees the current version requiring a 2-year cycle. With the implementation of CIP-014-4, has Drafting Team considered a 5-year gap that could result in the implementation of the newest version? FirstEnergy also supports EEI Comments which state: EEI is concerned that the implementation plan requires the initial risk assessment required by CIP-014-4 to be completed on or before the effective date of the Standard and does not provide a phased in approach. The modifications required by the proposed CIP-014-4 include new processes to be established prior to initiating new risk assessments. The proposed 24-month timeline is not reasonable for completing the initial risk assessment. EEI suggests allowing the initiation of CIP-014-4 risk assessments to occur on or before the effective date of the standard to allow additional time to modify programs.	
Likes 0	
Dislikes 0	
Response	
Leshel Hutchings - AEP - 3	
Answer	No
Document Name	
Comment	
The proposed implementation plan is 24 months. This means some Transmission Owners may have insufficient time, less than 36 months, to complete their next assessment based on the new standard. Example: a TO with an existing compliance deadline at the end of this year may fall under the shortened timeline. For large TOs, the existing applicability scoring, case prep, steady state and stability analysis, and third-party review can take as long as 1 year to perform per region. AEP has three regions (PJM, SPP, and ERCOT), which each take this amount of time. With the proposed proximity/applicability changes, scenario changes, and this implementation period would be insufficient time to adopt and reperform the assessment. In addition, given the new proximity criteria some small TOs may not have had any applicable stations previously and will have to create a new methodology and perform the assessment from scratch within that short 24-month period.	
Likes 0	
Dislikes 0	

Response

Nikki Carson-Marquis - Nikki Carson-Marquis On Behalf of: Theresa Allard, Minnkota Power Cooperative Inc., 1; - Nikki Carson-Marquis	
Answer	No
Document Name	
Comment	
MPC disagrees with the requirement to perform an analysis under CIP-014-4 prior to the effective date of the standard. This will very likely require utilities to perform a largely duplicative analysis in less than 30 months from their previous analysis. Such a duplicative analysis increases the study burden on utilities for no foreseeable benefit to BES reliability.	
Likes 0	
Dislikes 0	

Response

Ronald Hoover - Bonneville Power Administration - 1,3,5,6 - WECC	
Answer	No
Document Name	
Comment	
BPA appreciates the addition of the clarifying language about the first R5 due date. However, BPA identifies a potential overlap or gap when considering the current review cycle for the standard against a 24-month implementation plan. It is possible that an entity would have to adopt the new language extremely early to align with its next Version 3 cycle or perform an extra round of CIP-014 activities during the period in between Version 3 activities. BPA recommends using terminology such as that found in other standards such as FAC-014-3 R6: “Requirement R6 shall be implemented by the Planning Coordinator or Transmission Planner following the effective date of FAC-014-3 when it begins its next cycle for conducting the studies to support its Planning Assessment." BPA believes the inclusion of this language would help to reduce overall costs for the implementation of the changes.	
Likes 0	
Dislikes 0	

Response

Brian Millard - Tennessee Valley Authority - 1,3,5,6 - SERC, Group Name TVA RBB	
Answer	No
Document Name	
Comment	

TVA proposes to increase the implementation plan to 36 calendar months to align with the standard and give the industry more time to implement the changes in CIP-014-4.

Likes 0	
Dislikes 0	

Response

Israel Perez - Israel Perez On Behalf of: Laura Somak, Salt River Project, 3, 6, 5, 1; Mathew Weber, Salt River Project, 3, 6, 5, 1; Thomas Johnson, Salt River Project, 3, 6, 5, 1; Timothy Singh, Salt River Project, 3, 6, 5, 1; - Israel Perez

Answer	Yes
Document Name	

Comment

Salt River Project (SRP) supports the Implementation Plan.

Likes 0	
Dislikes 0	

Response

Selene Willis - Edison International - Southern California Edison Company - 5

Answer	Yes
Document Name	

Comment

See EEI Comments

Likes 0	
Dislikes 0	

Response

Robert Blackney - Edison International - Southern California Edison Company - 1

Answer	Yes
Document Name	

Comment

See comments submitted by EEI.	
Likes 0	
Dislikes 0	
Response	
Ellese Murphy - Ellese Murphy On Behalf of: Katherine Street, Duke Energy , 5, 6, 1, 1; - Ellese Murphy	
Answer	Yes
Document Name	
Comment	
Duke Energy supports the Implementation Plan.	
Likes 0	
Dislikes 0	
Response	
Jennifer Mcnally - Duke Energy - 1,3,5,6 - Texas RE,SERC,RF	
Answer	Yes
Document Name	
Comment	
Duke Energy supports the Implementation Plan.	
Likes 0	
Dislikes 0	
Response	
Dwanique Spiller - Berkshire Hathaway - NV Energy - 5	
Answer	Yes
Document Name	
Comment	
NV Energy agrees that 24 months is reasonable for implementation.	

Likes 0	
Dislikes 0	
Response	
Kristine Martz - Edison Electric Institute - NA - Not Applicable - NA - Not Applicable	
Answer	Yes
Document Name	
Comment	
EEI supports the Implementation Plan.	
Likes 0	
Dislikes 0	
Response	
Stefanie Burke - Portland General Electric Co. - 6	
Answer	Yes
Document Name	
Comment	
Likes 0	
Dislikes 0	
Response	
Amy Wilke - American Transmission Company, LLC - 1	
Answer	Yes
Document Name	
Comment	
Likes 0	
Dislikes 0	
Response	

Kelley Sargent - Puget Sound Energy, Inc. - 3	
Answer	Yes
Document Name	
Comment	
Likes 0	
Dislikes 0	
Response	
Jodirah Green - ACES Power Marketing - 1,3,4,5,6 - MRO,WECC,Texas RE,SERC,RF, Group Name ACES Collaborators	
Answer	Yes
Document Name	
Comment	
Likes 0	
Dislikes 0	
Response	
Scott Langston - Tallahassee Electric (City of Tallahassee, FL) - 1	
Answer	Yes
Document Name	
Comment	
Likes 0	
Dislikes 0	
Response	
Rachel Schuldt - Black Hills Corporation - 6, Group Name Black Hills Corporation - All Segments	
Answer	Yes
Document Name	
Comment	

Likes 0	
Dislikes 0	
Response	
Nick Leathers - Nick Leathers On Behalf of: David Jendras Sr, Ameren - Ameren Services, 3, 6, 1; - Nick Leathers	
Answer	Yes
Document Name	
Comment	
Likes 0	
Dislikes 0	
Response	
Lidija Efremova - Lidija Efremova On Behalf of: Emma Halilovic, Hydro One Networks, Inc., 1; - Lidija Efremova	
Answer	Yes
Document Name	
Comment	
Likes 0	
Dislikes 0	
Response	
James Baldwin - James Baldwin On Behalf of: Matt Lewis, Lower Colorado River Authority, 5, 1; - James Baldwin	
Answer	Yes
Document Name	
Comment	
Likes 0	
Dislikes 0	
Response	
Teresa Krabe - Lower Colorado River Authority - 5	

Answer	Yes
Document Name	
Comment	
Likes 0	
Dislikes 0	
Response	
Jamison Cawley - Nebraska Public Power District - 1	
Answer	Yes
Document Name	
Comment	
Likes 0	
Dislikes 0	
Response	
Richard Vendetti - NextEra Energy - 5	
Answer	Yes
Document Name	
Comment	
Likes 0	
Dislikes 0	
Response	
Alan Kloster - Alan Kloster On Behalf of: Jeremy Harris, Evergy, 3, 5, 1, 6; Kevin Frick, Evergy, 3, 5, 1, 6; Marcus Moor, Evergy, 3, 5, 1, 6; Tiffany Lake, Evergy, 3, 5, 1, 6; - Alan Kloster	
Answer	Yes
Document Name	
Comment	

Likes 0	
Dislikes 0	
Response	
Dave Krueger - SERC Reliability Corporation - 10	
Answer	Yes
Document Name	
Comment	
Likes 0	
Dislikes 0	
Response	
Jennie Wike - Jennie Wike On Behalf of: John Merrell, Tacoma Public Utilities (Tacoma, WA), 1, 4, 5, 6, 3; - Jennie Wike, Group Name Tacoma Power	
Answer	Yes
Document Name	
Comment	
Likes 0	
Dislikes 0	
Response	
Robert Jones - Seattle City Light - 4	
Answer	Yes
Document Name	
Comment	
Likes 0	
Dislikes 0	
Response	

Daniel Gacek - Exelon - 1	
Answer	Yes
Document Name	
Comment	
Likes 0	
Dislikes 0	
Response	
Andrew Smith - APS - Arizona Public Service Co. - 5	
Answer	Yes
Document Name	
Comment	
Likes 0	
Dislikes 0	
Response	
Chantal Mazza - Chantal Mazza On Behalf of: Junji Yamaguchi, Hydro-Quebec (HQ), 1, 5; Nicolas Turcotte, Hydro-Quebec (HQ), 1, 5; - Chantal Mazza	
Answer	Yes
Document Name	
Comment	
Likes 0	
Dislikes 0	
Response	
Tim Kelley - Tim Kelley On Behalf of: Charles Norton, Sacramento Municipal Utility District, 3, 6, 4, 1, 5; Foung Mua, Sacramento Municipal Utility District, 3, 6, 4, 1, 5; Kevin Smith, Balancing Authority of Northern California, 1; Nicole Looney, Sacramento Municipal Utility District, 3, 6, 4, 1, 5; Ryder Couch, Sacramento Municipal Utility District, 3, 6, 4, 1, 5; Wei Shao, Sacramento Municipal Utility District, 3, 6, 4, 1, 5; - Tim Kelley, Group Name SMUD and BANC	
Answer	Yes
Document Name	

Comment	
Likes 0	
Dislikes 0	
Response	
Clay Walker - Clay Walker On Behalf of: Robert Hirchak, Cleco Corporation, 6, 5, 1, 3; - Clay Walker	
Answer	Yes
Document Name	
Comment	
Likes 0	
Dislikes 0	
Response	
Ruida Shu - Northeast Power Coordinating Council - 1,2,3,4,5,6,7,8,9,10 - NPCC, Group Name NPCC RSC	
Answer	Yes
Document Name	
Comment	
Likes 0	
Dislikes 0	
Response	
Carver Powers - Utility Services, Inc. - 4	
Answer	Yes
Document Name	
Comment	
Likes 0	
Dislikes 0	
Response	

Richard Jackson - U.S. Bureau of Reclamation - 1	
Answer	Yes
Document Name	
Comment	
Likes 0	
Dislikes 0	
Response	
Sean Steffensen - IDACORP - Idaho Power Company - 1	
Answer	Yes
Document Name	
Comment	
Likes 0	
Dislikes 0	
Response	
Devin Shines - PPL - Louisville Gas and Electric Co. - 1,3,5,6 - SERC,RF	
Answer	Yes
Document Name	
Comment	
Likes 0	
Dislikes 0	
Response	
Donna Wood - Tri-State G and T Association, Inc. - 1	
Answer	Yes
Document Name	
Comment	

Likes 0	
Dislikes 0	
Response	
Rebika Yitna - Rebika Yitna On Behalf of: Roger Brand, MEAG Power, 3, 1; - Rebika Yitna	
Answer	Yes
Document Name	
Comment	
Likes 0	
Dislikes 0	
Response	
Gary Trezza - Long Island Power Authority - 1 - NPCC	
Answer	Yes
Document Name	
Comment	
Likes 0	
Dislikes 0	
Response	
Ben Hammer - Western Area Power Administration - 1	
Answer	Yes
Document Name	
Comment	
Likes 0	
Dislikes 0	
Response	

Joshua London - Eversource Energy - 1, Group Name Eversource	
Answer	Yes
Document Name	
Comment	
Likes 0	
Dislikes 0	
Response	
James Keele - Entergy - 3	
Answer	Yes
Document Name	
Comment	
Likes 0	
Dislikes 0	
Response	
Matthew Nicklin - Southern Illinois Power Cooperative - 1,3,5 - SERC	
Answer	Yes
Document Name	
Comment	
Likes 0	
Dislikes 0	
Response	
Tamarra Hardie - Tamarra Hardie On Behalf of: Diane E Landry, Public Utility District No. 1 of Chelan County, 3, 5, 1, 6; - Public Utility District No. 1 of Chelan County - 6, Group Name CHPD	
Answer	Yes
Document Name	
Comment	

Likes 0	
Dislikes 0	
Response	
Mark Flanary - Midwest Reliability Organization - 10	
Answer	Yes
Document Name	
Comment	
Likes 0	
Dislikes 0	
Response	
Jeffrey Streifling - NB Power Corporation - 1	
Answer	Yes
Document Name	
Comment	
Likes 0	
Dislikes 0	
Response	
Erin Wilson - NB Power Corporation - New Brunswick Power Transmission Corporation - 5	
Answer	Yes
Document Name	
Comment	
Likes 0	
Dislikes 0	
Response	

Kevin Conway - Western Power Pool - 4	
Answer	Yes
Document Name	
Comment	
Likes 0	
Dislikes 0	
Response	
Rachel Coyne - Texas Reliability Entity, Inc. - 10	
Answer	
Document Name	
Comment	
Texas RE recommends the implementation plan specify the list shall be established by the effective date of the standard to avoid delaying compliance obligations an additional 36 months. Absent a specified initial performance date in the implementation plan, the Transmission Owner would have until 36 months after the effective to establish its first list of Transmission station(s) and Transmission substation(s).	
Likes 0	
Dislikes 0	
Response	

7. Do you agree that CIP-014-4 is cost effective to address the reliability issue of physical security? If no, why not?

Ronald Hoover - Bonneville Power Administration - 1,3,5,6 - WECC

Answer	No
Document Name	

Comment

BPA does not believe the standard, as is, is cost effective in addressing the reliability of physical security. The spectrum of sites is too broad. BPA believes there is high potential for sites to be identified on CIP-014-4 list that would have little to no effect on the BES if they were disconnected from the grid. The standard, as is, allows sites with RAS capability to be listed as CIP-014, which mitigates an enormous amount of risk, some might argue all. The number of sites that could potentially be categorized as CIP-14 takes resources away from other sites along critical pathways, and sites that directly link to critical infrastructure. Additionally, day-to-day operations of upstream and downstream sites affect whether singular or multiple pieces of equipment in a site are critical. BPA finds the inclusions of R2.1 and R2.2 are so broad as to compound the issues of cost without a large gain in security or reliability. BPA believes the increase in CIP-014 applicability may require more resources than some smaller Transmission Owners have at their disposal. This increase will not only strain the resources of those smaller Transmission Owners but those of larger size within a BA that may be called upon to assist.

Likes 0	
Dislikes 0	

Response

Nikki Carson-Marquis - Nikki Carson-Marquis On Behalf of: Theresa Allard, Minnkota Power Cooperative Inc., 1; - Nikki Carson-Marquis

Answer	No
Document Name	

Comment

Requiring the CIP-014 risk assessment every 36 months for utilities who have not previously identified any stations or substations as critical is not cost effective; see MPC’s comments in response to Question 5.

Likes 0	
Dislikes 0	

Response

Leshel Hutchings - AEP - 3

Answer	No
Document Name	

Comment

While this SAR focused on the R1 risk assessment, the most effective protection against all possible threat vectors is to plan redundancy into the Transmission system to remove single points of failure. Protecting individual stations against specific threats will always be less effective than Transmission build out. The standard should be revised to consider Transmission Planning mitigations rather than defaulting to adding physical security.

Likes 0	
Dislikes 0	

Response

Rebika Yitna - Rebika Yitna On Behalf of: Roger Brand, MEAG Power, 3, 1; - Rebika Yitna

Answer	No
Document Name	

Comment

Performing the risk assessment every 36 months rather than every 60 months for those entities with no applicable stations/substations in the previous risk assessment does increase cost for TOs internally and increases the cost of using an unaffiliated 3rd party to verify the risk assessment. Also, it is expected with the newly added 'proximity within 1/2 mile', stations/substations in R2 will incur additional cost burden and not be cost effective, especially if the station/substation in 'proximity within 1/2 mile' is also found to be applicable and requires physical security enhancements to address any potential threats and/or vulnerabilities.

Likes 0	
Dislikes 0	

Response

Matt Carden - Southern Company - Southern Company Services, Inc. - 1

Answer	No
Document Name	

Comment

Southern Company recognizes the financial impacts of performing the risk assessment every 36 months rather than 60 months for Transmission Owners that have not identified any Transmission stations or Transmission substations. This is magnified by the requirement to have an unaffiliated third party verify the risk assessment at a higher frequency.

Likes 0	
Dislikes 0	

Response

Amy Wesselkamper - PNM Resources - Public Service Company of New Mexico - 3

Answer	No
Document Name	
Comment	
Increasing the frequency of risk assessments, including the R6 requirement for third-party validation causes increase demand on resources. The cost seems disproportionate to the potential benefit.	
Likes 0	
Dislikes 0	
Response	
Stephen Stafford - Stephen Stafford On Behalf of: Greg Davis, Georgia Transmission Corporation, 1; - Stephen Stafford	
Answer	No
Document Name	
Comment	
The issues of requiring Transmission Owners perform a Transmission Planning/Planning Coordinator function is problematic and makes assessment of cost-effectiveness unclear. Additionally, this dynamic will continue to lead to lack of clarity and consistency in the auditing of this standard which could result in cost and workload to address/respond to the requirements and audit reviews. Additionally, the requirement to add stations that are within a ½ mile radius of applicable stations will add more cost without any justification for the requirement. Furthermore, requiring a third-party verification of a planning assessment appears to be an unnecessary expense. Is there supporting evidence from the 2015 – 2024 time-period to show the benefits of this verification?	
Likes 0	
Dislikes 0	
Response	
Diana Aguas - CenterPoint Energy Houston Electric, LLC - 1 - Texas RE	
Answer	No
Document Name	
Comment	
CEHE believes increasing the study requirements and processes will cause an additional burden on TPs and the additional engineering hours will not be cost effective with current resources.	
Likes 0	
Dislikes 0	
Response	

Lucinda Bradshaw - Lucinda Bradshaw On Behalf of: Byron Booker, Oncor Electric Delivery, 1; - Lucinda Bradshaw	
Answer	No
Document Name	
Comment	
The comments above demonstrate that additional clarity is needed on certain portions of this revised CIP-014-4. Without that additional clarity, Oncor cannot state that the proposed changes to CIP-014-3 are cost effective. As noted above, some of these proposed revisions create additional burdens on TOs that could increase costs to TOs. For example, the additional burdens on TOs created in R2 and R4 will require new procedures and processes to be developed, documented, approved, and implemented – including the development and implementation of additional training concerning the new requirements.	
Likes 0	
Dislikes 0	
Response	
Jamison Cawley - Nebraska Public Power District - 1	
Answer	No
Document Name	
Comment	
Eliminate the third-party review included in Requirement R10. This is a considerable expense and has not been proven to add value to the Standard, having been disregarded by enforcement entities during numerous compliance monitoring activities. Please retire Requirement R10.	
Likes 0	
Dislikes 0	
Response	
Teresa Krabe - Lower Colorado River Authority - 5	
Answer	No
Document Name	
Comment	
The cost-effectiveness of CIP-014-4 in addressing physical security and reliability concerns is not entirely clear. The changes introduced, particularly regarding proximity criteria, may lead to a broader range of substations being classified for criticality assessment. This expansion could result in increased costs for compliance and implementation.	
Likes 0	

Dislikes 0	
Response	
James Baldwin - James Baldwin On Behalf of: Matt Lewis, Lower Colorado River Authority, 5, 1; - James Baldwin	
Answer	No
Document Name	
Comment	
The cost-effectiveness of CIP-014-4 in addressing physical security and reliability concerns is not entirely clear. The changes introduced, particularly regarding proximity criteria, may lead to a broader range of substations being classified for criticality assessment. This expansion could result in increased costs for compliance and implementation.	
Likes 0	
Dislikes 0	
Response	
Jennifer Mcnally - Duke Energy - 1,3,5,6 - Texas RE,SERC,RF	
Answer	No
Document Name	
Comment	
Duke Energy does not agree that CIP-014-4 is cost effective as proposed due to the ambiguity that still exists in the requirement language.	
Likes 0	
Dislikes 0	
Response	
Gail Elliott - Gail Elliott On Behalf of: Michael Moltane, International Transmission Company Holdings Corporation, 1; - Gail Elliott	
Answer	No
Document Name	
Comment	
There are two requirements that increase the cost to complete this study that do not improve reliability significantly. The first is R4. Collecting existing documentation on compliance responsibilities will only improve reliability if neither entity is performing a CIP-014 on specific sites. In NERC's, report this was not identified as a reliability gap. The second is for R2 where entities need to one share their existing and planned future applicable sites with other entities in order to receive data on whether or not they have or plan to build a transmission site nearby. Based on the footprints and configurations of a Transmission Owners facilities, this could involve disclosing to a number of entities information that is deemed sensitive if not CEII.	

Likes 0	
Dislikes 0	
Response	
Ellese Murphy - Ellese Murphy On Behalf of: Katherine Street, Duke Energy , 5, 6, 1, 1; - Ellese Murphy	
Answer	No
Document Name	
Comment	
Duke Energy does not agree that CIP-014-4 is cost effective as proposed due to the ambiguity that still exists in the requirement language.	
Likes 0	
Dislikes 0	
Response	
Alison Nickells - NiSource - Northern Indiana Public Service Co. - 1	
Answer	No
Document Name	
Comment	
Increasing the frequency of risk assessments, including the R6 requirement for third-party validation causes increase demand on resources. The cost seems disproportionate to the potential benefit.	
Likes 0	
Dislikes 0	
Response	
Kelley Sargent - Puget Sound Energy, Inc. - 3	
Answer	No
Document Name	
Comment	
It is not clear to us if CIP-014-4 is cost effective to address reliability issue of physical security. Changes introduced in CIP-014-4 with respect to proximity criteria (R1 and R2) may result in additional stations becoming applicable for criticality assessment, thereby potentially increasing costs.	
Likes 0	

Dislikes 0	

Response

Israel Perez - Israel Perez On Behalf of: Laura Somak, Salt River Project, 3, 6, 5, 1; Mathew Weber, Salt River Project, 3, 6, 5, 1; Thomas Johnson, Salt River Project, 3, 6, 5, 1; Timothy Singh, Salt River Project, 3, 6, 5, 1; - Israel Perez	
Answer	No
Document Name	
Comment	
Salt River Project (SRP) agrees with PNM that increasing the frequency of risk assessments, including the R6 requirement for third-party validation causes increase demand on resources. In addition, this would add additional burden on the Transmission Planners and additional resources would need to be allocated to meet the Standard.	
Likes 0	
Dislikes 0	

Response

Bob Cardle - Bob Cardle On Behalf of: Marco Rios, Pacific Gas and Electric Company, 3, 1, 5; Sandra Ellis, Pacific Gas and Electric Company, 3, 1, 5; Tyler Brun, Pacific Gas and Electric Company, 3, 1, 5; - Bob Cardle	
Answer	No
Document Name	
Comment	
We cannot comment on cost effectiveness.	
Likes 0	
Dislikes 0	

Response

Brian Millard - Tennessee Valley Authority - 1,3,5,6 - SERC, Group Name TVA RBB	
Answer	No
Document Name	
Comment	
Likes 0	
Dislikes 0	

Response	
Mark Garza - FirstEnergy - FirstEnergy Corporation - 4, Group Name FE Voter	
Answer	Yes
Document Name	
Comment	
FirstEnergy sees no issues in the cost effectiveness of the proposed CIP-014-4 standard.	
Likes 0	
Dislikes 0	
Response	
Jodirah Green - ACES Power Marketing - 1,3,4,5,6 - MRO,WECC,Texas RE,SERC,RF, Group Name ACES Collaborators	
Answer	Yes
Document Name	
Comment	
In the confines of, does the updated language cost effectively address the reliability issue of physical security from version to version of CIP-014, we would have to agree.	
Likes 0	
Dislikes 0	
Response	
Erin Wilson - NB Power Corporation - New Brunswick Power Transmission Corporation - 5	
Answer	Yes
Document Name	
Comment	
Likes 0	
Dislikes 0	
Response	

Jeffrey Streifling - NB Power Corporation - 1	
Answer	Yes
Document Name	
Comment	
Likes 0	
Dislikes 0	
Response	
Tamarra Hardie - Tamarra Hardie On Behalf of: Diane E Landry, Public Utility District No. 1 of Chelan County, 3, 5, 1, 6; - Public Utility District No. 1 of Chelan County - 6, Group Name CHPD	
Answer	Yes
Document Name	
Comment	
Likes 0	
Dislikes 0	
Response	
Matthew Nicklin - Southern Illinois Power Cooperative - 1,3,5 - SERC	
Answer	Yes
Document Name	
Comment	
Likes 0	
Dislikes 0	
Response	
James Keele - Entergy - 3	
Answer	Yes
Document Name	
Comment	

Likes 0	
Dislikes 0	
Response	
Ben Hammer - Western Area Power Administration - 1	
Answer	Yes
Document Name	
Comment	
Likes 0	
Dislikes 0	
Response	
Gary Trezza - Long Island Power Authority - 1 - NPCC	
Answer	Yes
Document Name	
Comment	
Likes 0	
Dislikes 0	
Response	
Richard Jackson - U.S. Bureau of Reclamation - 1	
Answer	Yes
Document Name	
Comment	
Likes 0	
Dislikes 0	
Response	

Carver Powers - Utility Services, Inc. - 4	
Answer	Yes
Document Name	
Comment	
Likes 0	
Dislikes 0	
Response	
Ruida Shu - Northeast Power Coordinating Council - 1,2,3,4,5,6,7,8,9,10 - NPCC, Group Name NPCC RSC	
Answer	Yes
Document Name	
Comment	
Likes 0	
Dislikes 0	
Response	
Tim Kelley - Tim Kelley On Behalf of: Charles Norton, Sacramento Municipal Utility District, 3, 6, 4, 1, 5; Foung Mua, Sacramento Municipal Utility District, 3, 6, 4, 1, 5; Kevin Smith, Balancing Authority of Northern California, 1; Nicole Looney, Sacramento Municipal Utility District, 3, 6, 4, 1, 5; Ryder Couch, Sacramento Municipal Utility District, 3, 6, 4, 1, 5; Wei Shao, Sacramento Municipal Utility District, 3, 6, 4, 1, 5; - Tim Kelley, Group Name SMUD and BANC	
Answer	Yes
Document Name	
Comment	
Likes 0	
Dislikes 0	
Response	
Chantal Mazza - Chantal Mazza On Behalf of: Junji Yamaguchi, Hydro-Quebec (HQ), 1, 5; Nicolas Turcotte, Hydro-Quebec (HQ), 1, 5; - Chantal Mazza	
Answer	Yes
Document Name	

Comment	
Likes 0	
Dislikes 0	
Response	
Andrew Smith - APS - Arizona Public Service Co. - 5	
Answer	Yes
Document Name	
Comment	
Likes 0	
Dislikes 0	
Response	
Daniel Gacek - Exelon - 1	
Answer	Yes
Document Name	
Comment	
Likes 0	
Dislikes 0	
Response	
Robert Jones - Seattle City Light - 4	
Answer	Yes
Document Name	
Comment	
Likes 0	
Dislikes 0	
Response	

Jennie Wike - Jennie Wike On Behalf of: John Merrell, Tacoma Public Utilities (Tacoma, WA), 1, 4, 5, 6, 3; - Jennie Wike, Group Name Tacoma Power	
Answer	Yes
Document Name	
Comment	
Likes 0	
Dislikes 0	
Response	
Dave Krueger - SERC Reliability Corporation - 10	
Answer	Yes
Document Name	
Comment	
Likes 0	
Dislikes 0	
Response	
Lidija Efremova - Lidija Efremova On Behalf of: Emma Halilovic, Hydro One Networks, Inc., 1; - Lidija Efremova	
Answer	Yes
Document Name	
Comment	
Likes 0	
Dislikes 0	
Response	
Scott Langston - Tallahassee Electric (City of Tallahassee, FL) - 1	
Answer	Yes
Document Name	

Comment	
Likes 0	
Dislikes 0	
Response	
Amy Wilke - American Transmission Company, LLC - 1	
Answer	Yes
Document Name	
Comment	
Likes 0	
Dislikes 0	
Response	
Kevin Conway - Western Power Pool - 4	
Answer	
Document Name	
Comment	

The SAR states: "The cost impacts for the proposed changes to CIP-014-3 are expected to be minimal. The changes add clarity to the current Standard to bring consistency and clarify expectations for effectively evaluating for instability, uncontrolled separation, and Cascading following a physical attack. The upper limit of cost added to entities is bounded due to no alteration of applicable substations potentially receiving security control upgrades. Rather, the cost incurred will be on the additions of study rigor, which again are anticipated to be relatively minimal."

The Drafting team has not provided additional data, and the dynamic and steady-state requirements are outside of the TO's area of responsibility. This requires a TO to access this expertise through contracting or other methods. The Drafting Team has failed to identify how this Standard may further capture additional Facilities, and require entities to take further security mitigations.

The Implementation Plan will require entities to reevaluate all of the risk assessment processes sooner that the current 36-month review period, since they will have to be compliant with all Facilities with 24 months of the proposed standard. This proposed standard fails to conduct a cost impact study, and we believe there are significant hidden costs in implementing this proposed standard.

Likes 0	
Dislikes 0	
Response	

Donna Wood - Tri-State G and T Association, Inc. - 1	
Answer	
Document Name	
Comment	
NA	
Likes 0	
Dislikes 0	
Response	

Devin Shines - PPL - Louisville Gas and Electric Co. - 1,3,5,6 - SERC,RF	
Answer	
Document Name	
Comment	
The second draft of CIP-014-4 sufficiently addresses many of the issues described in the SAR and provides an appropriate level of detail in the risk assessment requirements. Broadly, the second draft of CIP-014-4 is an improvement on CIP-014-3 and will improve consistency in risk assessment methodology throughout the industry. The cost effectiveness of CIP-014-4 for addressing physical security is difficult to determine, but the improvements over CIP-014-3 are appreciated.	
Likes 0	
Dislikes 0	
Response	

Kristine Martz - Edison Electric Institute - NA - Not Applicable - NA - Not Applicable	
Answer	
Document Name	
Comment	
EEI does not comment on cost.	
Likes 0	
Dislikes 0	
Response	

Dwanique Spiller - Berkshire Hathaway - NV Energy - 5	
Answer	
Document Name	
Comment	
NV Energy will not comment to the cost effectiveness of CIP-014-4.	
Likes 0	
Dislikes 0	
Response	
Nick Leathers - Nick Leathers On Behalf of: David Jendras Sr, Ameren - Ameren Services, 3, 6, 1; - Nick Leathers	
Answer	
Document Name	
Comment	
Ameren has no comment on the cost effectiveness of the project.	
Likes 0	
Dislikes 0	
Response	
Rachel Schuldt - Black Hills Corporation - 6, Group Name Black Hills Corporation - All Segments	
Answer	
Document Name	
Comment	
Black Hills Corporation will not comment on cost effectiveness.	
Likes 0	
Dislikes 0	
Response	

8. Provide any additional comments for the standard drafting team to consider, if desired.

Amy Wilke - American Transmission Company, LLC - 1

Answer	
Document Name	

Comment

Overall, ATC can stand behind most of the changes but would like to see updates on Requirement R2 before moving forward.

Additionally, please clarify in this standard if TOs and TOPs still need to do a study or assessment on previously qualified facilities if our company's corporate security team has voluntarily determined they were going to implement the highest level of physical security they have for a new or existing site. Does the SDT intend for TOs and TOPs to have to study those sites if they were already going to be classified at that high level of security. If not, this would be a really good exception to note that would save many companies a lot of time and effort.

Likes 0	
Dislikes 0	

Response

Bob Cardle - Bob Cardle On Behalf of: Marco Rios, Pacific Gas and Electric Company, 3, 1, 5; Sandra Ellis, Pacific Gas and Electric Company, 3, 1, 5; Tyler Brun, Pacific Gas and Electric Company, 3, 1, 5; - Bob Cardle

Answer	
Document Name	

Comment

The CIP-014-4 standard introduces a significant change by requiring the inclusion of stations within a 1/2-mile line of sight or easily accessible from a common roadway. However, the standard lacks clear guidelines for selecting stations. This could lead to inconsistencies and challenges in implementation, as different Transmission Owners and Transmission Operators may interpret and apply the criteria differently.

To improve clarity and ensure consistent implementation, the standard should provide more detailed guidance on the selection of stations, including specific criteria for evaluating lines of sight and ease of access from common roadways. This would help Transmission Owners and Transmission Operators to better understand the requirements and apply them consistently, ensuring the reliability and security of the electrical grid.

Likes 0	
Dislikes 0	

Response

Israel Perez - Israel Perez On Behalf of: Laura Somak, Salt River Project, 3, 6, 5, 1; Mathew Weber, Salt River Project, 3, 6, 5, 1; Thomas Johnson, Salt River Project, 3, 6, 5, 1; Timothy Singh, Salt River Project, 3, 6, 5, 1; - Israel Perez

Answer	
Document Name	

Comment	
Salt River Project (SRP) agrees with the EEI comment to review the Attachment 1, Criterion 3 reference to IROLs.	
Likes 0	
Dislikes 0	
Response	
Kelley Sargent - Puget Sound Energy, Inc. - 3	
Answer	
Document Name	
Comment	
It is not clear the type of events CIP-014-4 intends to address that can simultaneously impact 2 or more stations. The standard depends on physical security measures to mitigate such events, however mitigation to the extent may not be feasible nor cost effective.	
Likes 0	
Dislikes 0	
Response	
Romel Aquino - Edison International - Southern California Edison Company - 3	
Answer	
Document Name	2023-06 Unofficial_Comment_Form_Draft 2 - Final EEI Comments (1).docx
Comment	
See EEI Comments	
Likes 0	
Dislikes 0	
Response	
Jodirah Green - ACES Power Marketing - 1,3,4,5,6 - MRO,WECC,Texas RE,SERC,RF, Group Name ACES Collaborators	
Answer	
Document Name	
Comment	

We would like to thank the SDT for it's hard work and allowing us to provide feedback.	
Likes 0	
Dislikes 0	
Response	
Ellese Murphy - Ellese Murphy On Behalf of: Katherine Street, Duke Energy , 5, 6, 1, 1; - Ellese Murphy	
Answer	
Document Name	
Comment	
Duke Energy thanks the Drafting team for their work on the revisions and for incorporating stakeholder feedback from Draft 1 into Draft 2.	
Likes 0	
Dislikes 0	
Response	
Gail Elliott - Gail Elliott On Behalf of: Michael Moltane, International Transmission Company Holdings Corporation, 1; - Gail Elliott	
Answer	
Document Name	
Comment	
ITC is concerned that the proposed CIP-014-4, Attachment 1, Criterion 3 does not align with revisions to FAC-014-3 that became effective on April 1, 2024, which places the responsibility for establishing Interconnection Reliability Operating Limits (IROLs) for its Reliability Coordinator Area with the Reliability Coordinator in accordance with its system operating Limit methodology (SOL methodology). We suggest the revision below: 3.Facilities at a single station or substation location that are identified by its Reliability Coordinator as critical to the derivation of Interconnection Reliability Operating Limits (IROLs) and their associated contingencies.	
Likes 0	
Dislikes 0	
Response	
Jennifer Mcnally - Duke Energy - 1,3,5,6 - Texas RE,SERC,RF	
Answer	
Document Name	

Comment
Duke Energy thanks the Drafting team for their work on the revisions and for incorporating stakeholder feedback from Draft 1 into Draft 2.

Likes 0	
Dislikes 0	

Response

Lidija Efremova - Lidija Efremova On Behalf of: Emma Halilovic, Hydro One Networks, Inc., 1; - Lidija Efremova	
Answer	
Document Name	

Comment
Can the standard also provide a process diagram showing activities (at least for the Risk Assessment portion) alongside a time scale which would help to show the overlap of frequency of report (start to start) overlapping with how far the study should look out for facilities to be in-service. This has been a source of confusion in the industry and although was not required in the SAR, will help to clarify many misunderstandings.

Likes 0	
Dislikes 0	

Response

Jamison Cawley - Nebraska Public Power District - 1	
Answer	
Document Name	

Comment
Please provide clarification if “Line” includes long bus transformer connections between substations. Consider adding clarification or examples to the rationale as well. The example figure on Page 6 in the technical rationale highlights the 230kV line but does not indicate the status of the generation ties as included or excluded, nor does it show any tie transmission examples. Consider adding more detail and discussion for this figure.

Likes 0	
Dislikes 0	

Response

Dave Krueger - SERC Reliability Corporation - 10	
Answer	
Document Name	

Comment
SERC appreciates the ongoing efforts to refine the CIP-014 Risk Assessment portion of the standard. With the revisions to R1-R3, it is unclear how SAR Scope item #2 “Clarify the case(s) used for the risk assessment to be tailored to the Requirement R1 in-service window and correct any discrepancies between the study period, frequency of study, and the base case(s) a Transmission Owner uses.” Is being addressed, in order to insure high accuracy and fidelity to actual planned system conditions within the 36 month time period are addressed.

Likes 0	
Dislikes 0	

Response

Alan Kloster - Alan Kloster On Behalf of: Jeremy Harris, Evergy, 3, 5, 1, 6; Kevin Frick, Evergy, 3, 5, 1, 6; Marcus Moor, Evergy, 3, 5, 1, 6; Tiffany Lake, Evergy, 3, 5, 1, 6; - Alan Kloster	
Answer	
Document Name	

Comment
Evergy supports and incorporates by reference the comments of the Edison Electric Institute for question #8.

Likes 0	
Dislikes 0	

Response

Richard Vendetti - NextEra Energy - 5	
Answer	
Document Name	

Comment
NextEra supports the comments provided by EEI below: EEI is concerned that the proposed CIP-014-4, Attachment 1, Criterion 3 does not align with revisions to FAC-014-3 that became effective on April 1, 2024, which places the responsibility for establishing Interconnection Reliability Operating Limits (IROLs) for its Reliability Coordinator Area with the Reliability Coordinator in accordance with its system operating Limit methodology (SOL methodology). We suggest the revision below: }3. Facilities at a single station or substation location that are identified by its Reliability Coordinator, Planning Coordinator, or Transmission Planner as critical to the derivation of Interconnection Reliability Operating Limits (IROLs) and their associated contingencies.

Likes 0	
Dislikes 0	
Response	
Stefanie Burke - Portland General Electric Co. - 6	
Answer	
Document Name	
Comment	
PGE supports the comments of EEI.	
Likes 0	
Dislikes 0	
Response	
Robert Jones - Seattle City Light - 4	
Answer	
Document Name	
Comment	
To reiterate my comment from R3... we have experienced disagreement with regulators about what type of physical attack we are supposed to be simulating. The regulators we spoke with expected a severe "smoking crater" scenario, but our physical security personnel suggested looking at what the most likely scenarios would be (i.e. things seen in previous incidents). The standard provides no guidance here and leaves the choice of scenarios up to us. The type of attack to expect is not something that seems like it would vary by utility, so it makes sense that the standard would specify this rather than leaving it up to individual entities to determine. Some guidance in the standard would help clear up the ambiguity so that we can choose appropriate contingencies to run and avoid friction with regulators.	
Likes 0	
Dislikes 0	
Response	
Dwanique Spiller - Berkshire Hathaway - NV Energy - 5	
Answer	
Document Name	
Comment	

NV Energy thanks the drafting team for their responsiveness to industry comments on the initial draft.

Attachment 1 clarify if “Line” also includes long bus transformer connections between substations? Consider adding clarification or examples to the rationale as well. The example figure on page 6 in the technical rationale highlights the 230kV transmission lines but does not indicate the status of the generation ties as included or excluded or show any transmission tie transformer examples. Consider adding more details and discussion for this figure.

Likes 0	
Dislikes 0	

Response

Kristine Martz - Edison Electric Institute - NA - Not Applicable - NA - Not Applicable

Answer	
Document Name	

Comment

EEI is concerned that the proposed CIP-014-4, Attachment 1, Criterion 3 does not align with revisions to FAC-014-3 that became effective on April 1, 2024, which places the responsibility for establishing Interconnection Reliability Operating Limits (IROLs) for its Reliability Coordinator Area with the Reliability Coordinator in accordance with its system operating Limit methodology (SOL methodology). We suggest the revision below:

3. Facilities at a single station or substation location that are identified by its Reliability Coordinator as critical to the derivation of Interconnection Reliability Operating Limits (IROLs) and their associated contingencies.

Likes 0	
Dislikes 0	

Response

Daniel Gacek - Exelon - 1

Answer	
Document Name	

Comment

Exelon agrees with the EEI comment to review the Attachment 1, Criterion 3 reference to IROLs. Project 2015-09 made changes to the determination of IROLs that may impact the use if IROL in CIP-014.

Exelon suggests the drafting team initiate edits to the CMEP Practice Guide for CIP-014 to align the practice guide with the expansion of the R1 into R1 to R5.

Submitted on behalf of Exelon - Segments 1 & 3

Likes 0	

Dislikes 0	

Response

Andrew Smith - APS - Arizona Public Service Co. - 5	
Answer	
Document Name	

Comment
AZPS appreciates the clarifications included by the DT in this draft, however continues to seek additional clarifications regarding entity responsibilities or exclusion of responsibilities for non-owned/operated stations/substations within proximity of identified locations. For example, the relationship and requirements between Transmission Owners and Transmission Operators when adjacent facilities are involved is not clear. The Transmission Owner and Transmission Operator can be different entities and R8 states the notification is made to the adjacent Transmission Operator. The Transmission Owner performing the assessment and identifying the facilities in R5 will be subject to doing the Physical assessments and protection, however it is not clear how the Transmission Owner of the adjacent facility is notified and what, if any, requirements they have.

Likes 0	
Dislikes 0	

Response

Lucinda Bradshaw - Lucinda Bradshaw On Behalf of: Byron Booker, Oncor Electric Delivery, 1; - Lucinda Bradshaw	
Answer	
Document Name	

Comment
N/A

Likes 0	
Dislikes 0	

Response

Chantal Mazza - Chantal Mazza On Behalf of: Junji Yamaguchi, Hydro-Quebec (HQ), 1, 5; Nicolas Turcotte, Hydro-Quebec (HQ), 1, 5; - Chantal Mazza	
Answer	
Document Name	

Comment
We suggest adding triggers or process diagram similar to PRC-004 for required actions if ownership changes.

R6.3: Request R6.3 allow for 90 days instead of 60 so proper work can be completed. With a more detailed analysis being required, there is a higher chance of disagreement with our third party reviewer, requiring more time needed for response.

Likes 0	
Dislikes 0	

Response

Diana Aguas - CenterPoint Energy Houston Electric, LLC - 1 - Texas RE

Answer	
Document Name	

Comment

There is a typo in R8 Section 8.3. “Electricity Sector Information Sharing and Analysis Center (ES-ISAC)” should say “Electricity Information Sharing and Analysis Center (E-ISAC)”.

Likes 0	
Dislikes 0	

Response

Clay Walker - Clay Walker On Behalf of: Robert Hirchak, Cleco Corporation, 6, 5, 1, 3; - Clay Walker

Answer	
Document Name	

Comment

Cleco agrees with EEI comments.

Likes 0	
Dislikes 0	

Response

Stephen Stafford - Stephen Stafford On Behalf of: Greg Davis, Georgia Transmission Corporation, 1; - Stephen Stafford

Answer	
Document Name	

Comment

The primary issue with this standard as it is written, and as this draft continues is the application of requirements/expectations appropriate for the Transmission Planner/Planning Coordinator function to the Transmission Owner instead. This reduces clarity on the types of studies to be performed to assess the extreme events identified in this standard.

Regarding R6:

With an attempt at clarifying study criteria, though they should be applied to the appropriate planning entity, there is no reason to maintain a requirement for an unaffiliated third party to perform a verification of a transmission planning analysis associated with the risk assessment. Instead of requiring planning entities be the third-party verifier, they should just perform the study under clearly defined requirements in a TPL standard and communicate this information to the Transmission Owner. It is also important to note the third party verifying the risk assessment for this physical security standard is not required to have expertise in that area according to this requirement. Additionally, the SDT should consider removing the Reliability Coordinator as a potential third-party verifier as that function does not perform the type of analysis being sought in this standard.

Additional Comment:

The analysis outlined in the CIP-014 standard is an evaluation of an extreme event and is based on transmission planning analysis. Currently, the existing TPL-001 standard requires the evaluation of extreme events, though, it is not specific to this particular substation outage analysis and corrective actions are not required for these events. Additionally, there are ongoing efforts to establish a separate standard to address the long-term planning analysis around extreme weather events. It would seem NERC and the industry are potentially missing an opportunity to consolidate requirements around the evaluation of extreme events better than what is currently provided for in the current construct of the existing and planned Reliability Standards. Consideration should be given by NERC to provide a better pathway to house long-term planning requirements around extreme event analysis within the TPL standards (not CIP) and specify the reliability analyses needed, the parameters for determining reliability, expectations for corrective actions, and the communication path from planning to owners and others with a reliability-related need for this information. The planning assessment/CAP required by TPL-001 is already required to be distributed to applicable owners. Clarifying the extreme event expectations in TPL-001 to specify the substation outage alluded to in CIP-014 is one pathway to better align standard requirements with the appropriate entity.

Likes 0	
Dislikes 0	

Response

Ruida Shu - Northeast Power Coordinating Council - 1,2,3,4,5,6,7,8,9,10 - NPCC, Group Name NPCC RSC

Answer	
Document Name	

Comment

We suggest adding triggers or process diagram similar to PRC-004 for required actions if ownership changes.

R6.3: Request R6.3 allow for 90 days instead of 60 so proper work can be completed. With a more detailed analysis being required, there is a higher chance of disagreement with our third party reviewer, requiring more time needed for response.

Likes 0	
Dislikes 0	

Response

Amy Wesselkamper - PNM Resources - Public Service Company of New Mexico - 3	
Answer	
Document Name	
Comment	
PNM and TNMP support EEI comments.	
Likes 0	
Dislikes 0	
Response	
Matt Carden - Southern Company - Southern Company Services, Inc. - 1	
Answer	
Document Name	
Comment	
Southern Company recommends swapping Requirement R3 and R4 chronologically. This follows a more logical approach of identifying the stations and responsibilities to perform the assessment in the first three requirements followed by an assessment methodology in R4 and the performance of an assessment in R5. Southern Company recommends removing Requirement R6. With the understanding that this is not explicitly in scope of the current SAR, the added specificity of the proposed standard eliminates the reliability benefit of the third-party verifier. Additionally, based on a previous audit of CIP-014-3, Southern Company did not observe the Regional Entity take into consideration the review by the R2 third party verifier. If this is consistent across other Regional Entities, then an elimination of CIP-014-4 R6 may be appropriate due to the extra cost and the lack of a reliability benefit.	
Likes 0	
Dislikes 0	
Response	
Devin Shines - PPL - Louisville Gas and Electric Co. - 1,3,5,6 - SERC,RF	
Answer	
Document Name	
Comment	
LG&E/KU greatly appreciate the drafting team's willingness and effort to address concerns with the previous draft is greatly appreciated. The second draft makes substantial improvements while also accomplishing the objectives outlined in the SAR. While there are certain components of the standard that may be clarified and improved upon, the most crucial issues have been resolved.	

Likes 0	
Dislikes 0	
Response	
Donna Wood - Tri-State G and T Association, Inc. - 1	
Answer	
Document Name	
Comment	
NA	
Likes 0	
Dislikes 0	
Response	
Rebika Yitna - Rebika Yitna On Behalf of: Roger Brand, MEAG Power, 3, 1; - Rebika Yitna	
Answer	
Document Name	
Comment	
No additional comments	
Likes 0	
Dislikes 0	
Response	
Ben Hammer - Western Area Power Administration - 1	
Answer	
Document Name	
Comment	
WAPA recommends the SDT remove the third party verification Requirement R6. WAPA is concerned that this requirement holds an entity responsible for the actions of another organization, and creates the risk of non-compliances when a separate reviewer fails to complete their work on time.	

While this elimination is not explicitly mentioned in the SAR, it is directly tied to the changes proposed in the SAR. The purpose of the third party verification goes away with the increased prescriptiveness of the risk assessment being made in the drafts of CIP-014-4. In addition, since the SAR indicates that industry was not implementing a consistent approach to the risk assessments, then that indicates the third party verifications were also proving to be of little value. This independent verification is a burdensome and costly endeavor that has not proven to be value-added. Planning this task with eligible vendors requires significant work to coordinate and thousands of dollars to complete. Given that the verifications exist solely to offer feedback on an approach which will no longer be required with the increased specificity in R3, then their removal would eliminate what has become an unnecessary administrative burden.

Likes 0	
Dislikes 0	

Response

Mark Garza - FirstEnergy - FirstEnergy Corporation - 4, Group Name FE Voter

Answer	
Document Name	

Comment

No additional comments.

Likes 0	
Dislikes 0	

Response

Leshel Hutchings - AEP - 3

Answer	
Document Name	

Comment

AEP's Additional Comments:

1. There is a typo in R8 Section 8.3 which could be corrected in this revision. "Electricity Sector Information Sharing and Analysis Center (ES-ISAC)" should say "Electricity Information Sharing and Analysis Center (E-ISAC)".
2. The level in the VRF/VSL justification does not match the VRF/VSL levels in the standard draft for R2 and R3 – these need to be aligned.

Likes 0	
Dislikes 0	

Response

Nikki Carson-Marquis - Nikki Carson-Marquis On Behalf of: Theresa Allard, Minnkota Power Cooperative Inc., 1; - Nikki Carson-Marquis

Answer	
Document Name	
Comment	
MPC thanks the drafting team for their consideration and appreciates the opportunity to comment.	
Likes 0	
Dislikes 0	
Response	
Ronald Hoover - Bonneville Power Administration - 1,3,5,6 - WECC	
Answer	
Document Name	
Comment	
BPA recognizes significant improvements with the current draft. With the exception of a few areas of clarity being needed, BPA believes we are on track to meet current NERC and FERC guidelines.	
Likes 0	
Dislikes 0	
Response	
Joshua London - Eversource Energy - 1, Group Name Eversource	
Answer	
Document Name	
Comment	
R6.3: Eversource requests R6.3 allow for 90 days instead of 60 so proper work can be completed. With a more detailed analysis being required, there is a higher chance of disagreement with our third party reviewer, requiring more time needed for response. **Overall,** Eversource appreciates the efforts of the drafting team and overall is in agreement with the current draft. Eversource's concerns of the use of the phrase "planned to be in service" in R1 is the only portion of the updated standard keeping the company from being in favor.	
Likes 0	
Dislikes 0	

Response
Matthew Nicklin - Southern Illinois Power Cooperative - 1,3,5 - SERC
Answer	
Document Name	
Comment
We would like to thank the SDT for it’s hard work and allowing us to provide feedback.
Likes 0	
Dislikes 0	
Response
Jeffrey Streifling - NB Power Corporation - 1
Answer	
Document Name	
Comment
We suggest adding triggers or process diagram similar to PRC-004 for required actions if ownership changes.
Likes 0	
Dislikes 0	
Response
Erin Wilson - NB Power Corporation - New Brunswick Power Transmission Corporation - 5
Answer	
Document Name	
Comment
We suggest adding triggers or process diagram similar to PRC-004 for required actions if ownership changes.
Likes 0	
Dislikes 0	
Response

Brian Millard - Tennessee Valley Authority - 1,3,5,6 - SERC, Group Name TVA RBB	
Answer	
Document Name	
Comment	
N/A	
Likes 0	
Dislikes 0	
Response	
Kevin Conway - Western Power Pool - 4	
Answer	
Document Name	
Comment	
The Drafting Team's survey should be rethought going forward. Simple asking for a response that a requirement meets the SAR is lazy and requires the respondent to search the SAR for where the individual requirement may fit. The Drafting Team is encouraged to identify and map where a requirement is addressing each issue in the SAR. This will allow the respondent to provide much more specific feedback. As in other standards that have specific applicability, all TOs should have to meet the R1 requirement every 36 months. They would then be able to determine their applicability to the other requirements if they meet the threshold. TO's do not have transmission planning resources, and requirements that require the entity to do transmission studies, should be assigned to Transmission Planners or Planning Coordinators. If this is not done, the results of the effects of losing one or more transmission Facilities will be inconsistent and potentially could conflict with TPL-001 results.	
Likes 0	
Dislikes 0	
Response	

Treymayne Brown – ReliabilityFirst – 10

Question 1 – Yes

Question 2 – No

Comment: The requirement should more clearly state which Transmission station(s) and substation(s) should be included in this evaluation. Based on the way this Requirement is presently written, there is ambiguity around which Transmission station(s) and substation(s) should be included that could lead to the entity not evaluating multiple station(s) simultaneously based on their documented criteria.

Recommend revising the wording to explicitly state "document and implement" in order to eliminate any vagueness. This change clarifies the expectation and removes any ambiguity regarding the steps required. By specifying both documentation and implementation, it ensures there is no implied assumption that one necessarily follows the other without clear action.

Question 3 – No

Comment:
R3
- Based on the wording, the requirement can be interpreted that the entire loss of the station is not required. The word "entire loss" should be added here for clarity. - Additionally, the phrase "post-event response" is too vague. To provide more detailed and enforceable guidance, it should be replaced with specific criteria such as "thermal overloads, voltage magnitude, voltage deviation, voltage recovery, frequency magnitude, frequency deviation, and frequency recovery." These terms would offer clear metrics for assessing the impact of post-event conditions and provide a stronger foundation for compliance and also reinforces the type of analysis required.

3.2 should be more descriptive for entities to ensure consistency on how they determine which stress cases are used. Stress scenario should also be clearly defined in the required methodology. In addition, 3.2 does not provide any guidance on the year of study (e.g., one year out, two, five, etc.). RF would like to recommend modifying the R3 Measurement to require the entity to submit the risk assessment, similar to the R6 Measurement.

Question 4 – Yes

Question 5 – No

Comment: The standard does not specify which study year should be used when conducting risk assessments. This is a significant issue, as it mirrors a gap in the current CIP-014 standard. The lack of clarity creates the potential for a reliability gap if an entity uses a case study from two years out but only performs the study every three years. This could result in assessments based on outdated data that do not accurately reflect the current risks. It is crucial to revise the standard to define the specific study year to be used for assessments, ensuring consistency and reliability across entities. Additionally, the model and contingency list used in the study must be reviewed for accuracy, ensuring they reflect the conditions of the year in question. Moreover, the risk assessment should include not only the entity's own systems but also those of its neighboring entities. This broader perspective ensures a more comprehensive understanding of potential risks and enhances the effectiveness of the overall security posture.

5.1 should be revised to provide more flexibility to the responsible entity. Specifically, it is recommended to add language that allows entities the option not to perform a risk assessment for Transmission station(s) or substation(s) that have already been identified as critical and have enhanced physical security protections in place. This would prevent redundant assessments while ensuring that high-risk assets remain secure.

Question 6 – Yes

Question 7 – Yes

Consideration of Comments

Project Name:	2023-06 CIP-014 Risk Assessment Refinement | Draft 2
Comment Period Start Date:	9/23/2024
Comment Period End Date:	11/6/2024
Associated Ballots:	Project 2023-06 CIP-014 Risk Assessment Refinement CIP-014-4 AB 2 ST Project 2023-06 CIP-014 Risk Assessment Refinement Implementation Plan AB 2 OT

There were 64 sets of responses, including comments from approximately 135 different people from approximately 80 companies representing 10 of the Industry Segments as shown in the table on the following pages.

Questions

1. Do you agree with the modifications made in CIP-014-4 with modified Requirement R1 to address the issues identified in the SAR?

2. Do you agree with the modifications made in CIP-014-4 with new Requirement R2 to address the issues identified in the SAR?

3. Do you agree with the modifications made in CIP-014-4 with new Requirement R3 to address the issues identified in the SAR?

4. Do you agree with the modifications made in CIP-014-4 with new Requirement R4 to address the issues identified in the SAR?

5. Do you agree with the modifications made in CIP-014-4 with adding Requirement R5 to address the issues identified in the SAR?

6. Do you agree with the Implementation Plan for CIP-014-4?

7. Do you agree that CIP-014-4 is cost effective to address the reliability issue of physical security? If no, why not?

8. Provide any additional comments for the standard drafting team to consider, if desired.

Organization Name	Name	Segment(s)	Region	Group Name	Group Member Name	Group Member Organization	Group Member Segment(s)	Group Member Region
Tennessee Valley Authority	Brian Millard	1,3,5,6	SERC	TVA RBB	Ian Grant	Tennessee Valley Authority	3	SERC
					David Plumb	Tennessee Valley Authority	1	SERC
					Armando Rodriguez	Tennessee Valley Authority	6	SERC
					Nehtisha Rollis	Tennessee Valley Authority	5	SERC
Jennie Wike	Jennie Wike		WECC	Tacoma Power	Jennie Wike	Tacoma Public Utilities	1,3,4,5,6	WECC
					John Merrell	Tacoma Public Utilities (Tacoma, WA)	1	WECC
					John Nierenberg	Tacoma Public Utilities (Tacoma, WA)	3	WECC
					Hien Ho	Tacoma Public Utilities (Tacoma, WA)	4	WECC
					Terry Gifford	Tacoma Public Utilities (Tacoma, WA)	6	WECC
					Ozan Ferrin	Tacoma Public Utilities (Tacoma, WA)	5	WECC
ACES Power Marketing	Jodirah Green	1,3,4,5,6	MRO,NPCC,RF,SERC,Texas RE,WECC	ACES Collaborators	Bob Soloman	Hoosier Energy Electric Cooperative	1	RF
					Kevin Lyons	Central Iowa Power Cooperative	1	MRO

					Kylee Kropp	Sunflower Electric Power Corporation	1	MRO
					Nick Fogleman	Prairie Power, Inc.	1,3	SERC
Eversource Energy	Joshua London	1		Eversource	Joshua London	Eversource Energy	1	NPCC
					Vicki O'Leary	Eversource Energy	3	NPCC
FirstEnergy - FirstEnergy Corporation	Mark Garza	4		FE Voter	Julie Severino	FirstEnergy - FirstEnergy Corporation	1	RF
					Aaron Ghodooshim	FirstEnergy - FirstEnergy Corporation	3	RF
					Robert Loy	FirstEnergy - FirstEnergy Solutions	5	RF
					Mark Garza	FirstEnergy-FirstEnergy	1,3,4,5,6	RF
					Stacey Sheehan	FirstEnergy - FirstEnergy Corporation	6	RF
Black Hills Corporation	Rachel Schuldt	6		Black Hills Corporation - All Segments	Travis Grablander	Black Hills Corporation	1	WECC
					Josh Combs	Black Hills Corporation	3	WECC
					Rachel Schuldt	Black Hills Corporation	6	WECC
					Carly Miller	Black Hills Corporation	5	WECC
					Sheila Suurmeier	Black Hills Corporation	5	WECC
Northeast Power Coordinating Council	Ruida Shu	1,2,3,4,5,6,7,8,9,10	NPCC	NPCC RSC	Gerry Dunbar	Northeast Power Coordinating Council	10	NPCC
					Deidre Altobell	Con Edison	1	NPCC
					Michele Tondalo	United Illuminating Co.	1	NPCC
					Stephanie Ullah-Mazzuca	Orange and Rockland	1	NPCC

Michael Ridolfino	Central Hudson Gas & Electric Corp.	1	NPCC
Randy Buswell	Vermont Electric Power Company	1	NPCC
James Grant	NYISO	2	NPCC
Dermot Smyth	Con Ed - Consolidated Edison Co. of New York	1	NPCC
David Burke	Orange and Rockland	3	NPCC
Peter Yost	Con Ed - Consolidated Edison Co. of New York	3	NPCC
Salvatore Spagnolo	New York Power Authority	1	NPCC
Sean Bodkin	Dominion - Dominion Resources, Inc.	6	NPCC
David Kwan	Ontario Power Generation	4	NPCC
Silvia Mitchell	NextEra Energy - Florida Power and Light Co.	1	NPCC
Sean Cavote	PSEG	4	NPCC
Jason Chandler	Con Edison	5	NPCC
Tracy MacNicoll	Utility Services	5	NPCC
Shivaz Chopra	New York Power Authority	6	NPCC
Vijay Puran	New York State Department of Public Service	6	NPCC

					David Kiguel	Independent	7	NPCC
					Joel Charlebois	AESI	7	NPCC
					Joshua London	Eversource Energy	1	NPCC
					Jeffrey Streifling	NB Power Corporation	1,4,10	NPCC
					Joel Charlebois	AESI	7	NPCC
					John Hastings	National Grid	1	NPCC
					Erin Wilson	NB Power	1	NPCC
					James Grant	NYISO	2	NPCC
					Michael Couchesne	ISO-NE	2	NPCC
					Kurtis Chong	IESO	2	NPCC
					Michele Pagano	Con Edison	4	NPCC
					Bendong Sun	Bruce Power	4	NPCC
					Carvers Powers	Utility Services	5	NPCC
					Wes Yeomans	NYSRC	7	NPCC
					Chantal Mazza	Hydro Quebec	1	NPCC
					Nicolas Turcotte	Hydro Quebec	2	NPCC
Dominion - Dominion Resources, Inc.	Sean Bodkin	6		Dominion	Victoria Crider	Dominion Energy	3	NA - Not Applicable
					Sean Bodkin	Dominion Energy	6	NA - Not Applicable
					Steven Belle	Dominion Energy	1	NA - Not Applicable
					Barbara Marion	Dominion Energy	5	NA - Not Applicable
Public Utility District No. 1 of Chelan County	Tamarra Hardie	6		CHPD	Joyce Gundry	Public Utility District No. 1 of Chelan County	3	WECC
					Rebecca Zahler	Public Utility District No. 1 of Chelan County	5	WECC

					Diane Landry	Public Utility District No. 1 of Chelan County	1	WECC
Tim Kelley	Tim Kelley		WECC	SMUD and BANC	Nicole Looney	Sacramento Municipal Utility District	3	WECC
					Charles Norton	Sacramento Municipal Utility District	6	WECC
					Wei Shao	Sacramento Municipal Utility District	1	WECC
					Foung Mua	Sacramento Municipal Utility District	4	WECC
					Nicole Goi	Sacramento Municipal Utility District	5	WECC
					Kevin Smith	Balancing Authority of Northern California	1	WECC

1. Do you agree with the modifications made in CIP-014-4 with modified Requirement R1 to address the issues identified in the SAR?

Kevin Conway - Western Power Pool - 4

Answer	No
Document Name	

Comment

There is a disconnect between the listed responsibility in the Applicability Section 4.1 and R1. Does the Drafting team expect ALL TOPs to comply to R1, or ONLY those who have facilities that meet the criteria of Attachment 1? There is a high likelihood that auditors will interpret that ALL TOPs will have to complete R1 and show that they scored their facilities to determine applicability under Attachment 1.

We suggest that the applicability section include ALL TOPs, and the requirements be modified to have all TOPs complete R1, then if they have not met the criteria of Attachment 1, they stop and have no additional compliance obligation. This would more clearly identify who is applicable to the Standard and eliminate a lot of ambiguity of what the auditors will need to verify that an entity is not applicable to the standard.

Likes 0	
Dislikes 0	

Response

Thank you for your comments. TOPs are not called out in requirement R1; Applicable TOPs are only required to comply with those requirements where they are explicitly called out.

Tamarra Hardie - Tamarra Hardie On Behalf of: Diane E Landry, Public Utility District No. 1 of Chelan County, 3, 5, 1, 6; - Public Utility District No. 1 of Chelan County - 6, Group Name CHPD

Answer	No
Document Name	Near-Term vs Long-Term - Glossary of Terms.docx

Comment

It appears that the Draft 2 changes to R1 clarified that the list is to be documented once every 36 months for all applicable stations “that are existing or planned to be in service within 36 months”, which is an improvement from the previous draft version. This improves clarity but the R1 VRF Time Horizon still states that R1 applies to ‘Long-term Planning Horizon’, whereas the NERC Glossary of Terms defines the ‘Near-Term Planning Horizon’ as the window covering year 1 through 5. This requirement references ‘within 36 months’, so it is recommended that the R1 VRF Time Horizon language is updated to reference the ‘Near-Term Transmission Planning Horizon’. Please see attached document “Near-Term vs Long-Term - Glossary of Terms”.

Likes 0	
Dislikes 0	

Response

Thank you for your comments. NERC Time Horizons define “Long-term Planning” as “a planning horizon of one year or longer”. This document is located on NERC public site: Document Portrait.

Joshua London - Eversource Energy - 1, Group Name Eversource

Answer	No

Document Name	
Comment	

Eversource is looking for clarity on what is meant by the phrase “Planned to be in service.”

Eversource suggests either providing more prescriptive language around at what point in the process a project is considered “planned,” or make the following change:

Each Transmission Owner, at least once every 36 calendar months, shall document a list of applicable Transmission station(s) and Transmission substation(s) meeting any of the criteria in Attachment 1 that are either existing or planned, **as defined by the Transmission Owner,** to be in service within 36 calendar months**.**

Likes 0	
Dislikes 0	
Response	

Thank you for your comments. “Planned to be in service” is a term taken from CIP-014-3 and the meaning is unchanged from the currently effective version. "Planned to be in-service" should be taken to mean all Transmission station(s) and Transmission substation(s) as modeled in the base cases for the Long-Term Transmission Planning Horizon.

Ronald Hoover - Bonneville Power Administration - 1,3,5,6 - WECC	
Answer	No
Document Name	
Comment	

BPA believes the current language of R1 seems to be intended to create auditable documentation of the same outcome that is already achieved when a Registered Entity evaluates the current Applicability section. BPA suggests restoring applicability content to the Applicability section and changing R1 language for applicable Registered Entities to maintain the list of applicable stations or substations obtained through evaluation of the Applicability section.

Likes 0	
Dislikes 0	
Response	

Thank you for your comments. The Drafting Team moved the language to an attachment due to the breadth of the language addition. The applicability language should remain where it is to allow entities an “off-ramp” to the standard requirements if they do not have applicable Transmission stations or substations.

Nikki Carson-Marquis - Nikki Carson-Marquis On Behalf of: Theresa Allard, Minnkota Power Cooperative Inc., 1; - Nikki Carson-Marquis	
Answer	No
Document Name	
Comment	

MPC strongly disagrees with the use of a 36-month timeframe for utilities who have not previously identified stations or substations as critical for the same reasons specified in our comments for Question 5.

Likes 0	
Dislikes 0	

Response

Thank you for your comments. A directive of the SAR was to "correct any discrepancies between the study period, frequency of study, and the base case{s} a Transmission Owner uses." The Drafting Team chose a timeframe that balanced the directive of the SAR and the comments from industry to make the timeframe either shorter or longer than 36 months.

Chantal Mazza - Chantal Mazza On Behalf of: Junji Yamaguchi, Hydro-Quebec (HQ), 1, 5; Nicolas Turcotte, Hydro-Quebec (HQ), 1, 5; - Chantal Mazza

Answer	No
Document Name	

Comment

The NPCC RSC is looking for clarity on what is meant by the phrase "Planned to be in service."

The NPCC RSC suggests either providing more prescriptive language around how a project is considered "planned," or make the following change:

Each Transmission Owner, at least once every 36 calendar months, shall document a list of applicable Transmission station(s) and Transmission substation(s) meeting any of the criteria in Attachment 1 that are either existing or planned, **as defined by the Transmission Owner,** to be in service within 36 calendar months.

Likes 0	
Dislikes 0	

Response

Thank you for your comments. "Planned to be in service" is a term taken from CIP-014-3 and the meaning is unchanged from the currently effective version. "Planned to be in-service" should be taken to mean all Transmission station(s) and Transmission substation(s) as modeled in the base cases for the Near-Term Transmission Planning Horizon.

Lucinda Bradshaw - Lucinda Bradshaw On Behalf of: Byron Booker, Oncor Electric Delivery, 1; - Lucinda Bradshaw

Answer	No
Document Name	

Comment

Oncor does not agree with the provision requiring consideration of Transmission station(s) and Transmission substation(s) that are planned to be in service within 36 calendar months because that time frame is beyond Oncor's accurate planning time frame, particularly given the large amount of growth currently being experienced in Oncor's service area. Instead, Oncor recommends that the provision be revised to require consideration of Transmission station(s) and Transmission substation(s) that are planned to be in service within 24 months.

Likes 0	
Dislikes 0	

Response

Thank you for your comments. A directive of the SAR was to "correct any discrepancies between the study period, frequency of study, and the base case{s} a Transmission Owner uses." The responsible entity is expected to perform an analysis with the best available information at the time of their analysis. The Drafting Team chose a timeframe that balanced the directive of the SAR and the comments from industry to make the timeframe either shorter or longer than 36 months.

Jamison Cawley - Nebraska Public Power District - 1

Answer	No
Document Name	

Comment

Please see the comments in our responses to Questions 2 through 8 of this questionnaire.

Likes 0	
Dislikes 0	

Response

Thank you for your comment. Please see responses to questions 2 through 8.

Jennifer Mcnally - Duke Energy - 1,3,5,6 - Texas RE,SERC,RF

Answer	No
Document Name	

Comment

Duke Energy still has concerns that the timeline for the performance of R1 is not clear. We recommend that the assessment be performed within 36 months of *the completion* of the previous R1 assessment. We also recommend the end of R1 specify "planned to be in service in the model year three years out from the year in which the assessment is performed". Years capture more accurately how planning is conducted. As written in draft 2, if the assessment is performed in October 2024, will using a planning model from Summer 2027 be acceptable? With the current language using 36 months, we have concerns that it would not be.

If the drafting team is not willing to consider referencing years for modeling, we recommend that they consider clarifying with a footnote that for planning purposes, the model year should be at least three years out from the start of the assessment.

Likes 0	
Dislikes 0	

Response

Thank you for your comments. The proposed implementation plan allows an adequate transition between CIP-014-3 R1 risk assessment and CIP-014-4 R5 risk assessment. The initial risk assessment required by Reliability Standard CIP-014-4 Requirement R5, must be completed on or before the effective date of the standard. Subsequent risk assessments shall be performed no later than 36 calendar months following the effective date of Reliability Standard CIP-014-4. In the previous version of CIP-014, the 30-month time frame and the 24-month planned-to-be-in-service date could, if not carefully applied, lead to gaps between models and study horizons. Per the Standard Authorization Request (SAR), CIP-014-4 has consolidated these multiple timelines into one. Requirement R1 is revised to ensure that each Transmission Owner establishes a list of applicable Transmission station(s) or Transmission substation(s) in accordance with Attachment 1. Aligning the 36 calendar months look ahead in Requirement R1 with the 36 calendar month risk assessment cycle ensures that system topology of the cases used to assess applicability is

consistent with the system topology in the risk assessment models. Planned to be in-service" should be taken to mean all Transmission station(s) and Transmission substation(s) as modeled in the base cases for the Near-Term Transmission Planning Horizon.

If the assessment is performed in October 2024, using a planning model from Summer 2027 is acceptable.

Ellese Murphy - Ellese Murphy On Behalf of: Katherine Street, Duke Energy , 5, 6, 1, 1; - Ellese Murphy

Answer	No
Document Name	

Comment

Duke Energy still has concerns that the timeline for the performance of R1 is not clear. We recommend that the assessment be performed within 36 months of *the completion* of the previous R1 assessment. We also recommend the end of R1 specify “planned to be in service in the model year three years out from the year in which the assessment is performed”. Years capture more accurately how planning is conducted. As written in draft 2, if the assessment is performed in October 2024, will using a planning model from Summer 2027 be acceptable? With the current language using 36 months, we have concerns that it would not be.

If the drafting team is not willing to consider referencing years for modeling, we recommend that they consider clarifying with a footnote that for planning purposes, the model year should be at least three years out from the start of the assessment.

Likes 0	
Dislikes 0	

Response

Thank you for your comments. The proposed implementation plan allows an adequate transition between CIP-014-3 R1 risk assessment and CIP-014-4 R5 risk assessment. The initial risk assessment required by Reliability Standard CIP-014-4 Requirement R5, must be completed on or before the effective date of the standard. Subsequent risk assessments shall be performed no later than 36 calendar months following the effective date of Reliability Standard CIP-014-4.

You assumption is correct. If the assessment is performed in October 2024, using a planning model from Summer 2027 is acceptable.

Kelley Sargent – Puget Sound Energy, Inc. – 3

Answer	No
Document Name	

Comment

We agree with the intent of CIP-014-4 to address issues identified in the SAR, however we would like to suggest changes to improve readability.

There is some interplay between R1 and R2 through Attachment 1 that makes identification of “applicable” stations confusing. R1 refers to Attachment 1 to identify “applicable” stations based on the weighting criteria in Table 1. Attachment 1 section 2.1 requires user to refer to R2 and apply proximity criteria to stations that were not applicable in R1.

To meet the intent of SAR to identify station “groups” that meet applicability criteria of Attachment 1, it may be best to identify station groups separately under R2 as a sub-requirement (i.e. move Section 2.1 from Attachment 1 to sub-requirement R2.2) and make Attachment 1 agnostic of stations or station groups. This separates intent of R1 and R2 and allows both requirements to reference Attachment 1 applicability criteria. R1 will identify

individual stations that meet Attachment 1 applicability criteria. R2 will identify station groups with stations that were individually non-applicable under R1, but when combined with other non-applicable station(s) – based on proximity criteria of R2, may be applicable per Attachment 1 Table 1.	
Likes 0	
Dislikes 0	
Response	
Thank you for your comments. These comments refer to a previous version of the draft standard as these changes have been addressed in the current draft standard up for ballot. As an example, requirement R2.1 in Attachment 1 is removed in the latest draft revision.	
Israel Perez – Israel Perez On Behalf of: Laura Somak, Salt River Project, 3, 6, 5, 1; Mathew Weber, Salt River Project, 3, 6, 5, 1; Thomas Johnson, Salt River Project, 3, 6, 5, 1; Timothy Singh, Salt River Project, 3, 6, 5, 1; - Israel Perez	
Answer	No
Document Name	
Comment	
Salt River Project (SRP) agrees with EEI's suggestion to remove the word "proximity" from R3 to avoid using a term that is undefined in R2 and the comment that R3 Part 3.1.1 duplicates the concepts in R3 Part 3.1.	
Likes 0	
Dislikes 0	
Response	
Thank you for your comment. Please see responses to EEI's comments.	
Bob Cardle – Bob Cardle On Behalf of: Marco Rios, Pacific Gas and Electric Company, 3, 1, 5; Sandra Ellis, Pacific Gas and Electric Company, 3, 1, 5; Tyler Brun, Pacific Gas and Electric Company, 3, 1, 5; - Bob Cardle	
Answer	No
Document Name	
Comment	
The CIP-014-4 standard introduces a significant change by requiring the inclusion of stations within a ½-mile line of sight or easily accessible from a common roadway. However, the standard lacks clear guidelines for selecting stations. This could lead to inconsistencies and challenges in implementation, as different Transmission Owners and Transmission Operators may interpret and apply the criteria differently. To improve clarity and ensure consistent implementation, the standard should provide more detailed guidance on the selection of stations, including specific criteria for evaluating lines of sight and ease of access from common roadways. This would help Transmission Owners and Transmission Operators to better understand the requirements and apply them consistently, ensuring the reliability and security of the electrical grid.	
Likes 0	
Dislikes 0	
Response	
Thank you for your comment. The DT made appropriate changes to address your suggestions.	

Sean Bodkin – Dominion – Dominion Resources, Inc. – 6, Group Name Dominion	
Answer	No
Document Name	
Comment	
The proposed 36 months for the period is not realistic as it is beyond a planning timeframe that would produce meaningful results. Limiting the period to 24 months accounts for issues such as supply chain, construction constraints, and outage planning to maintain a reliable system.	
Likes 0	
Dislikes 0	
Response	
Thank you for your comments. The SAR scope is to "correct any discrepancies between the study period, frequency of study, and the base case{s} a Transmission Owner uses." The Drafting Team chose a timeframe that balanced the scope of the SAR and the comments from industry to make the timeframe either shorter or longer than 36 months.	
Leshel Hutchings – AEP – 3	
Answer	Yes
Document Name	
Comment	
None	
Likes 0	
Dislikes 0	
Response	
Thank you for your comment and support.	
Mark Garza – FirstEnergy – FirstEnergy Corporation – 4, Group Name FE Voter	
Answer	Yes
Document Name	
Comment	
FirstEnergy has no concerns with the proposed R1 for CIP-014-4.	
Likes 0	
Dislikes 0	
Response	
Thank you for your support.	

Gary Trezza – Long Island Power Authority – 1 – NPCC	
Answer	Yes
Document Name	
Comment	

c) From a compliance perspective, it is recommended to provide more prescriptive language in the standard or within the technical rationale, to help entities in identifying planned projects around how a project is considered “planned,” or make the following change:

Each Transmission Owner, at least once every 36 calendar months, shall document a list of applicable Transmission station(s) and Transmission substation(s) meeting any of the criteria in Attachment 1 that are either existing or planned, **as defined by the Transmission Owner**, to be in service within 36 calendar months

b) With respect to the scoring in Attachment one, it’s unclear if transmission lines in series with a stepdown transformer would be included if the secondary voltage was 138 kV (as one example). Could the SDT identify if the scoring is based on the high side voltage or low side voltage? LIPA suggests a footnote identifying the voltage class used to determine qualification should be added below the scoring table.

c) In addition, since 500 kV facilities meet the Attachment 1 criteria 1, it seems as though the line item in the table for 500 kV and above may be removed as to avoid confusion.

Likes 0	
Dislikes 0	
Response	

Thank you for your comments and support. “Planned to be in service” is a term taken from CIP-014-3 and the meaning is unchanged from the currently effective version. "Planned to be in-service" should be taken to mean all Transmission station(s) and Transmission substation(s) as modeled in the base cases for the Near-Term Transmission Planning Horizon.

Regarding the scoring of the Attachment 1, the summing of the lines for the aggregated value should be done regardless of whether or not the line terminates into a transformer.

Regarding your comment on the 500 kV Facilities in Attachment 1, the DT has addressed the issue by changing “0” to “N/A”.

Ruida Shu - Northeast Power Coordinating Council - 1,2,3,4,5,6,7,8,9,10 - NPCC, Group Name NPCC RSC	
Answer	Yes
Document Name	
Comment	

The NPCC RSC is looking for clarity on what is meant by the phrase “Planned to be in service.”

The NPCC RSC suggests either providing more prescriptive language around how a project is considered “planned,” or make the following change:

Each Transmission Owner, at least once every 36 calendar months, shall document a list of applicable Transmission station(s) and Transmission substation(s) meeting any of the criteria in Attachment 1 that are either existing or planned, **as defined by the Transmission Owner,** to be in service within 36 calendar months.

Likes 0	

Dislikes 0	
Response	
Thank you for your comments and support. “Planned to be in service” is a term taken from CIP-014-3 and the meaning is unchanged from the currently effective version."Planned to be in-service" should be taken to mean all Transmission station(s) and Transmission substation(s) as modeled in the base cases for the Near-Term Transmission Planning Horizon.	
Clay Walker - Clay Walker On Behalf of: Robert Hirchak, Cleco Corporation, 6, 5, 1, 3; - Clay Walker	
Answer	Yes
Document Name	
Comment	
Cleco agrees with EEI comments.	
Likes 0	
Dislikes 0	
Response	
Thank you for your comment and support.	
Daniel Gacek - Exelon - 1	
Answer	Yes
Document Name	
Comment	
Submitted on behalf of Exelon - Segments 1 & 3	
Likes 0	
Dislikes 0	
Response	
Thank you for your comments and support.	
Kristine Martz - Edison Electric Institute - NA - Not Applicable - NA - Not Applicable	
Answer	Yes
Document Name	
Comment	
EEI agrees with the modifications made in CIP-014-4 R1.	
Likes 0	
Dislikes 0	

Response	
Thank you for your comments and support.	
Dwanique Spiller - Berkshire Hathaway - NV Energy - 5	
Answer	Yes
Document Name	
Comment	
NV Energy appreciates this revision from the previous draft which maintains overall continuity with previous versions of the standard.	
Likes 0	
Dislikes 0	
Response	
Thank you for your comments and support.	
TRACEY JOHNSON - Southern Indiana Gas and Electric Co. - 3,5,6 - RF	
Answer	Yes
Document Name	
Comment	
Southern Indiana Gas and Electric Company d/b/a CenterPoint Energy Indiana South (SIGE) supports the comments as submitted by Edison Electric Institute (EEI).	
Likes 0	
Dislikes 0	
Response	
Thank you for your comments and support. Please see responses to EEI's comments.	
Robert Blackney - Edison International - Southern California Edison Company - 1	
Answer	Yes
Document Name	
Comment	
See comments submitted by EEI.	
Likes 0	
Dislikes 0	
Response	
Thank you for your comments and support. Please see responses to EEI's comments.	

Selene Willis - Edison International - Southern California Edison Company - 5	
Answer	Yes
Document Name	
Comment	
See EEI Comments	
Likes 0	
Dislikes 0	
Response	
Thank you for your comments and support.	
Brian Millard - Tennessee Valley Authority - 1,3,5,6 - SERC, Group Name TVA RBB	
Answer	Yes
Document Name	
Comment	
Likes 0	
Dislikes 0	
Response	
Thank you for your support.	
Erin Wilson - NB Power Corporation - New Brunswick Power Transmission Corporation - 5	
Answer	Yes
Document Name	
Comment	
Likes 0	
Dislikes 0	
Response	
Thank you for your support.	
Jeffrey Streifling - NB Power Corporation - 1	
Answer	Yes
Document Name	
Comment	

Likes 0	
Dislikes 0	
Response	
Thank you for your support.	
Mark Flanary - Midwest Reliability Organization - 10	
Answer	Yes
Document Name	
Comment	
Likes 0	
Dislikes 0	
Response	
Thank you for your support.	
Matthew Nicklin - Southern Illinois Power Cooperative - 1,3,5 - SERC	
Answer	Yes
Document Name	
Comment	
Likes 0	
Dislikes 0	
Response	
Thank you for your support.	
James Keele - Entergy - 3	
Answer	Yes
Document Name	
Comment	
Likes 0	
Dislikes 0	
Response	
Thank you for your support.	

Ben Hammer - Western Area Power Administration - 1	
Answer	Yes
Document Name	
Comment	
Likes 0	
Dislikes 0	
Response	
Thank you for your support.	
Rebika Yitna - Rebika Yitna On Behalf of: Roger Brand, MEAG Power, 3, 1; - Rebika Yitna	
Answer	Yes
Document Name	
Comment	
Likes 0	
Dislikes 0	
Response	
Thank you for your support.	
Donna Wood - Tri-State G and T Association, Inc. - 1	
Answer	Yes
Document Name	
Comment	
Likes 0	
Dislikes 0	
Response	
Thank you for your support.	
Devin Shines - PPL - Louisville Gas and Electric Co. - 1,3,5,6 - SERC,RF	
Answer	Yes
Document Name	
Comment	

Likes 0	
Dislikes 0	
Response	
Thank you for your support.	
Sean Steffensen - IDACORP - Idaho Power Company - 1	
Answer	Yes
Document Name	
Comment	
Likes 0	
Dislikes 0	
Response	
Thank you for your support.	
Richard Jackson - U.S. Bureau of Reclamation - 1	
Answer	Yes
Document Name	
Comment	
Likes 0	
Dislikes 0	
Response	
Thank you for your support.	
Matt Carden - Southern Company - Southern Company Services, Inc. - 1	
Answer	Yes
Document Name	
Comment	
Likes 0	
Dislikes 0	
Response	
Thank you for your support.	
Amy Wesselkamper - PNM Resources - Public Service Company of New Mexico - 3	

Answer	Yes
Document Name	
Comment	
Likes 0	
Dislikes 0	
Response	
Thank you for your support.	
Jessica Cordero - Unisource - Tucson Electric Power Co. - 1	
Answer	Yes
Document Name	
Comment	
Likes 0	
Dislikes 0	
Response	
Thank you for your support.	
Carver Powers - Utility Services, Inc. - 4	
Answer	Yes
Document Name	
Comment	
Likes 0	
Dislikes 0	
Response	
Thank you for your support.	
Stephen Stafford - Stephen Stafford On Behalf of: Greg Davis, Georgia Transmission Corporation, 1; - Stephen Stafford	
Answer	Yes
Document Name	
Comment	
Likes 0	

Dislikes 0	
Response	
Thank you for your support.	
Tim Kelley - Tim Kelley On Behalf of: Charles Norton, Sacramento Municipal Utility District, 3, 6, 4, 1, 5; Foung Mua, Sacramento Municipal Utility District, 3, 6, 4, 1, 5; Kevin Smith, Balancing Authority of Northern California, 1; Nicole Looney, Sacramento Municipal Utility District, 3, 6, 4, 1, 5; Ryder Couch, Sacramento Municipal Utility District, 3, 6, 4, 1, 5; Wei Shao, Sacramento Municipal Utility District, 3, 6, 4, 1, 5; - Tim Kelley, Group Name SMUD and BANC	
Answer	Yes
Document Name	
Comment	
Likes 0	
Dislikes 0	
Response	
Thank you for your support.	
Diana Aguas - CenterPoint Energy Houston Electric, LLC - 1 - Texas RE	
Answer	Yes
Document Name	
Comment	
Likes 0	
Dislikes 0	
Response	
Thank you for your support.	
Andrew Smith - APS - Arizona Public Service Co. - 5	
Answer	Yes
Document Name	
Comment	
Likes 0	
Dislikes 0	
Response	
Thank you for your support.	

Robert Jones - Seattle City Light - 4	
Answer	Yes
Document Name	
Comment	
Likes 0	
Dislikes 0	
Response	
Thank you for your support.	
Jennie Wike - Jennie Wike On Behalf of: John Merrell, Tacoma Public Utilities (Tacoma, WA), 1, 4, 5, 6, 3; - Jennie Wike, Group Name Tacoma Power	
Answer	Yes
Document Name	
Comment	
Likes 0	
Dislikes 0	
Response	
Thank you for your support.	
Dave Krueger - SERC Reliability Corporation - 10	
Answer	Yes
Document Name	
Comment	
Likes 0	
Dislikes 0	
Response	
Thank you for your support.	
Alan Kloster - Alan Kloster On Behalf of: Jeremy Harris, Evergy, 3, 5, 1, 6; Kevin Frick, Evergy, 3, 5, 1, 6; Marcus Moor, Evergy, 3, 5, 1, 6; Tiffany Lake, Evergy, 3, 5, 1, 6; - Alan Kloster	
Answer	Yes
Document Name	
Comment	

Likes 0	
Dislikes 0	
Response	
Thank you for your support.	
Richard Vendetti - NextEra Energy - 5	
Answer	Yes
Document Name	
Comment	
Likes 0	
Dislikes 0	
Response	
Thank you for your support.	
Teresa Krabe - Lower Colorado River Authority - 5	
Answer	Yes
Document Name	
Comment	
Likes 0	
Dislikes 0	
Response	
Thank you for your support.	
James Baldwin - James Baldwin On Behalf of: Matt Lewis, Lower Colorado River Authority, 5, 1; - James Baldwin	
Answer	Yes
Document Name	
Comment	
Likes 0	
Dislikes 0	
Response	
Thank you for your support.	

Lidija Efremova - Lidija Efremova On Behalf of: Emma Halilovic, Hydro One Networks, Inc., 1; - Lidija Efremova	
Answer	Yes
Document Name	
Comment	
Likes 0	
Dislikes 0	
Response	
Thank you for your support.	
Nick Leathers - Nick Leathers On Behalf of: David Jendras Sr, Ameren - Ameren Services, 3, 6, 1; - Nick Leathers	
Answer	Yes
Document Name	
Comment	
Likes 0	
Dislikes 0	
Response	
Thank you for your support.	
Rachel Schuldt - Black Hills Corporation - 6, Group Name Black Hills Corporation - All Segments	
Answer	Yes
Document Name	
Comment	
Likes 0	
Dislikes 0	
Response	
Thank you for your support.	
Scott Langston - Tallahassee Electric (City of Tallahassee, FL) - 1	
Answer	Yes
Document Name	
Comment	

Likes 0	
Dislikes 0	
Response	
Thank you for your support.	
John Pearson - ISO New England, Inc. - 2	
Answer	Yes
Document Name	
Comment	
Likes 0	
Dislikes 0	
Response	
Thank you for your support.	
Gail Elliott - Gail Elliott On Behalf of: Michael Moltane, International Transmission Company Holdings Corporation, 1; - Gail Elliott	
Answer	Yes
Document Name	
Comment	
Likes 0	
Dislikes 0	
Response	
Thank you for your support.	
Alison Nickells - NiSource - Northern Indiana Public Service Co. - 1	
Answer	Yes
Document Name	
Comment	
Likes 0	
Dislikes 0	
Response	
Thank you for your support.	
Amy Wilke - American Transmission Company, LLC - 1	

Answer	Yes
Document Name	
Comment	
Likes 0	
Dislikes 0	
Response	
Thank you for your support.	
Stefanie Burke - Portland General Electric Co. - 6	
Answer	Yes
Document Name	
Comment	
Likes 0	
Dislikes 0	
Response	
Thank you for your support.	
Rachel Coyne - Texas Reliability Entity, Inc. - 10	
Answer	
Document Name	
Comment	
Texas RE recommends updating the Applicability, 4.1 Functional Entities – 4.1.1 language to include solely and jointly owned facilities. Texas RE recommends the following revision (in bold): 4.1.1 Transmission Owner that owns **or jointly owns** a Transmission station(s) or Transmission substation(s) that meets the applicability criteria of Attachment 1.	
Likes 0	
Dislikes 0	
Response	
Thank you for comment. Please see the revised Standard to reflect this change.	

2. Do you agree with the modifications made in CIP-014-4 with new Requirement R2 to address the issues identified in the SAR?

Sean Bodkin - Dominion - Dominion Resources, Inc. - 6, Group Name Dominion

Answer	No
Document Name	

Comment

Dominion Energy in general supports the EEI comments and specifically has concerns with both line of sight and comon roadways being vague and subjective..

Likes 0	
Dislikes 0	

Response

Thank you for your comment. The DT believes they have made appropriate changes to address the concerns. Additionally, please see the Drafting Team's response to EEI comments.

Stefanie Burke - Portland General Electric Co. - 6

Answer	No
Document Name	

Comment

PGE supports the comments of EEI.

Likes 0	
Dislikes 0	

Response

Thank you for the comment. Please see response to EEI comments.

Amy Wilke - American Transmission Company, LLC - 1

Answer	No
Document Name	

Comment

There needs to be more explanation on how the ½ mile criteria works with 2.1 and 2.2. As is written, the language in this section is confusing.

Is the ½ mile the maximum distance to consider, but you need to consider the line of sight too criteria too?
If two stations are within ½ mile of each other, but not in a direct line of sight, how does that impact the qualifications?

ATC recommends eliminating 2.1 and 2.2 to remove the confusion or to have some clarifying examples or sentences in the standard to explain how these sections work together.

Also, the inclusion of non-owned substations (i.e., the “irrespective of ownership” language) may also introduce further complications for TOs in their study analysis and should be further clarified what steps need to be taken to account for these non-owned stations.	
Likes 0	
Dislikes 0	
Response	
Thank you for your comment. The Drafting Team has reduced the distance criteria and provided specific reference points for measurement. Additionally, they have removed requirements R2.1 and R2.2 from the draft standard.	
Bob Cardle - Bob Cardle On Behalf of: Marco Rios, Pacific Gas and Electric Company, 3, 1, 5; Sandra Ellis, Pacific Gas and Electric Company, 3, 1, 5; Tyler Brun, Pacific Gas and Electric Company, 3, 1, 5; - Bob Cardle	
Answer	No
Document Name	
Comment	
The CIP-014-4 standard introduces a significant change by requiring the inclusion of stations within a 1/2-mile line of sight or easily accessible from a common roadway. However, the standard lacks clear guidelines for selecting stations. This could lead to inconsistencies and challenges in implementation, as different Transmission Owners and Transmission Operators may interpret and apply the criteria differently. To improve clarity and ensure consistent implementation, the standard should provide more detailed guidance on the selection of stations, including specific criteria for evaluating lines of sight and ease of access from common roadways. This would help Transmission Owners and Transmission Operators to better understand the requirements and apply them consistently, ensuring the reliability and security of the electrical grid.	
Likes 0	
Dislikes 0	
Response	
Thank you for your comment. The DT made appropriate changes to address your suggestions.	
Israel Perez - Israel Perez On Behalf of: Laura Somak, Salt River Project, 3, 6, 5, 1; Mathew Weber, Salt River Project, 3, 6, 5, 1; Thomas Johnson, Salt River Project, 3, 6, 5, 1; Timothy Singh, Salt River Project, 3, 6, 5, 1; - Israel Perez	
Answer	No
Document Name	
Comment	
Salt River Project (SRP) supports the EEI comments and shares the concern with both line of sight and common roadways being vague and subjective.	
Likes 0	
Dislikes 0	
Response	
Thank you for your comment. The DT made appropriate changes to address the concerns. Additionally, please see the Drafting Team’s response to EEI comments.	
Selene Willis - Edison International - Southern California Edison Company - 5	

Answer	No
Document Name	
Comment	
See EEI Comments	
Likes 0	
Dislikes 0	
Response	
Thank you for the comment. Please see response to EEI comments.	
Robert Blackney - Edison International - Southern California Edison Company - 1	
Answer	No
Document Name	
Comment	
See comments submitted by EEI.	
Likes 0	
Dislikes 0	
Response	
Thank you for the comment. Please see response to EEI comments.	
Kelley Sargent - Puget Sound Energy, Inc. - 3	
Answer	No
Document Name	
Comment	
½ mile is a very wide separation criterion for adjacency. A reasonable separation within 200 feet or so seems a more practical consideration for adjacent substations that may be impacted by a single physical event. An event simultaneously impacting 2 stations with ½ mile separation will be difficult to protect from physical security standpoint and cost prohibitive. This aligns with PSE past comments (in June 2024): *It is not clear the type of events CIP-014-4 intends to address that can simultaneously impact 2 or more stations. The standard depends on physical security measures to mitigate such events, however mitigation to the extent may not be feasible nor cost effective.*	
Likes 0	
Dislikes 0	
Response	
Thank you for the comment. The Drafting Team has reduced the separation requirement, added clarification on the reference point for measurement and added language in the Technical Rationale to explain the reason for the chosen distance.	

Alison Nickells - NiSource - Northern Indiana Public Service Co. - 1	
Answer	No
Document Name	

Comment

NIPSCO agrees with CenterPoint Energy Houston Electric, LLC (CEHE). *"Line of sight" or "ease of access" in Requirement R2 are arbitrary values and should not be used to comply with NERC requirements*

NIPSCO also agrees with AEP. *The intent is to identify close physical proximity such that a singular event could impact both stations; other ranges are irrelevant.* ***Emphasize explicitly in the standard language or Guidelines and Technical Basis that this considers only a single, simultaneous attack****. Considering non-simultaneous attacks makes the number of scenarios infinite and is not feasible to analyze or protect against.*

NIPSCO also agrees with Georgia Transmission Corp: *The intent of the requirement is understood and appreciated. However, the nature of the "single physical attack" needs clarification. Interpretations of this attack can range from events where elements are lost with some time delay between failures (gun shots for example) to a simultaneous loss of all elements (large explosion?). Clarity on the nature of the physical attack or parameters that can be applied to define the attack are needed to avoid differing interpretations of what event is to be studied and how this requirement is to be audited.*

Additionally, this guidance is appropriately located in the TPL space to clarify to planning entities what type of extreme event needs to be evaluated and subsequently communicated to the Transmission

Likes 0	
Dislikes 0	

Response

Thank you for the comment. The Drafting Team has removed requirements R2.1 and R2.2 from the draft standard.

Ellese Murphy - Ellese Murphy On Behalf of: Katherine Street, Duke Energy , 5, 6, 1, 1; - Ellese Murphy	
Answer	No
Document Name	

Comment

Duke Energy does not support the language proposed for R2. The fundamental issue still exists that R2 is not tied to likely threat vectors identified within an entity's security program. We understand that due to the sequencing of the requirements that linking to R8 is not feasible but do think that more general reference to likely threat vectors identified by the entity would create a more meaningful requirement. If the Drafting Team prefers to create R2 in a way that has a uniform distance requirement for proximity sites, we believe that the distance should be based on ballistic threats and a more reasonable distance would be 1000ft. We do not find the ½ mile radius to be technically justified. Duke Energy supports prescribing that line of sight be addressed in documented criteria but does not support prescribing ease of access from a common roadway and supports EEI's comments on this. Ease of access from a common roadway is far more subjective than line of sight and less immediately relevant for a coordinated attack.

It is also still unclear how the criteria can use sites in proximity irrespective of ownership and Duke Energy supports EEI membership's concern on this issue. The requirement to study sites identified in R2 that are not owned by your company creates an unclear path forward for conducting the studies. It is likely that many of these proximity sites will not even be part of the BES and could be owned by entities that do not have any BES assets. There is no mechanism to force these entities to provide the data that would be needed to perform the R3 analysis and comply with CIP-014. We encourage the Drafting Team to consider whether it makes more sense to account for sites of differing ownership when they are determined to be applicable in accordance with Requirement R1 by a different registered entity. Duke Energy recommends the following language for R2:

Each Transmission Owner shall have documented criteria to determine their Transmission station(s) or Transmission substation(s), that are adjacent, adjacent meaning having a perimeter fence within 1000 ft of the perimeter fence of an applicable Transmission station or Transmission substation documented in Requirement R1, that could be impacted by a single physical attack that from likely threats vectors. The Transmission Owner must also include in their criteria identification of adjacent transmission station(s) or substation(s) that are owned and determined to be applicable in accordance with Requirement R1 by a different registered entity. From the adjacent Transmission station(s) or Transmission substation(s), the criteria shall also identify Transmission station(s) or Transmission substation(s) within line of sight from a single location without obstruction of an applicable Transmission station or Transmission substation documented in Requirement R1.

Likes 0	
Dislikes 0	

Response

Thank you for the comment. The Drafting Team has reduced the separation requirement, added clarification on the reference point for measurement and added language in the Technical Rationale to explain the reason for the chosen distance. Additionally, they have removed requirements R2.1 and R2.2, which pertained to line-of-sight and ease of access.

Gail Elliott – Gail Elliott On Behalf of: Michael Moltane, International Transmission Company Holdings Corporation, 1; - Gail Elliott

Answer	No
Document Name	

Comment

Comments: {C}{C}{C} {C}{C}ITC does not support the changes identified in R2. ITC recommends R2 and all its subparts be revised. The proposed R2 language by the drafting team provides concerns due to the high probability of missing a substation located within the 0.5 mile radius as the TO would not have the required information of all existing nearby facilities nor have the information necessary to identify that the electric facility is a transmission station. Furthermore, a TO is to identify any future transmission stations that could be constructed within 3 years which would be even more difficult to locate. ITC proposes the following for R2 and its sub-parts.

If the TO has identified that it has multiple fenced areas on a site that it considers as one station, there is not clarity if R2 would be applicable. Would these instead just apply to R1?

R2. Each Transmission Owner shall have documented criteria to determine those of its Transmission station(s) and Transmission substation(s) within ½ mile of an applicable Transmission station or Transmission substation documented in Requirement R1 that could be impacted by a single physical attack. The criteria shall address at a minimum the following:

{C}2.1 Line of sight between multiple Transmission station(s) or Transmission substation(s) from a single location without obstruction.

If an entity has multiple fenced areas on a property site but they consider these all one station would they be non-compliant if the loss of all sites was not studied.

Finally, the identification of a physically adjacent site to an applicable station as being critical has issues if the site is not owned by the same entity as the applicable site. If mitigation measures are needed, which entity shall determine the scope of these mitigations and who should pay for them.

Likes 0	

Dislikes 0	

Response
Thank you for the comment. Ownership and identification of proximate transmission stations and substations is an explicit requirement of the SAR (see Project Scope item 5). Proximate substation identification can be achieved through publicly available tools such as Google Maps and cross-referenced with model data to identify specific transmission facilities. The Drafting Team assumes the responsible entity will choose a model that reflects the requirements of the standard and contains appropriate future projects, including distance from applicable substations owned by the responsible entity.

Jennifer Mcnally - Duke Energy - 1,3,5,6 - Texas RE,SERC,RF	
Answer	No
Document Name	

Comment
Duke Energy does not support the language proposed for R2. The fundamental issue still exists that R2 is not tied to likely threat vectors identified within an entity's security program. We understand that due to the sequencing of the requirements that linking to R8 is not feasible but do think that more general reference to likely threat vectors identified by the entity would create a more meaningful requirement. If the Drafting Team prefers to create R2 in a way that has a uniform distance requirement for proximity sites, we believe that the distance should be based on ballistic threats and a more reasonable distance would be 1000ft. We do not find the ½ mile radius to be technically justified. Duke Energy supports prescribing that line of sight be addressed in documented criteria but does not support prescribing ease of access from a common roadway and supports EEI's comments on this. Ease of access from a common roadway is far more subjective than line of sight and less immediately relevant for a coordinated attack. It is also still unclear how the criteria can use sites in proximity irrespective of ownership and Duke Energy supports EEI membership's concern on this issue. The requirement to study sites identified in R2 that are not owned by your company creates an unclear path forward for conducting the studies. It is likely that many of these proximity sites will not even be part of the BES and could be owned by entities that do not have any BES assets. There is no mechanism to force these entities to provide the data that would be needed to perform the R3 analysis and comply with CIP-014. We encourage the Drafting Team to consider whether it makes more sense to account for sites of differing ownership when they are determined to be applicable in accordance with Requirement R1 by a different registered entity. Duke Energy recommends the following language for R2: Each Transmission Owner shall have documented criteria to determine their Transmission station(s) or Transmission substation(s), that are adjacent, adjacent meaning having a perimeter fence within 1000 ft of the perimeter fence of an applicable Transmission station or Transmission substation documented in Requirement R1, that could be impacted by a single physical attack that from likely threats vectors. The Transmission Owner must also include in their criteria identification of adjacent transmission station(s) or substation(s) that are owned and determined to be applicable in accordance with Requirement R1 by a different registered entity. From the adjacent Transmission station(s) or Transmission substation(s), the criteria shall also identify Transmission station(s) or Transmission substation(s) within line of sight from a single location without obstruction of an applicable Transmission station or Transmission substation documented in Requirement R1.

Likes 0	
Dislikes 0	

Response
Thank you for the comment. The Drafting Team has reduced the separation requirement, added clarification on the reference point for measurement and added language in the Technical Rationale to explain the reason for the chosen distance. Additionally, the DT has removed requirements R2.1 and R2.2, which pertained to line-of-sight and ease of access.

John Pearson - ISO New England, Inc. - 2	
Answer	No

Document Name	

Comment

R2, when combined with other requirements such as R3.3, can lead to an overly conservative outcome. In R2, stations can be grouped together due to being in close proximity to each other. Then testing is done to understand the impact of the loss of the proximity group under R3.3. By way of example, assume that there are two stations near each other, one being a very large station with numerous transmission lines connecting to it, where if tested individually, would result in significant concerns on the remaining system. The second station is a very small station, that if tested individually would have no meaningful impact on the remaining system. When they are grouped together, the results would not be meaningfully worse than the event occurring at the large, well-interconnected station, yet the second station would get swept into needing CIP-014 upgrades simply because of its proximity, rather than the results of the test being worse. This would require customers to pay for unnecessary physical protection measures to be installed at the smaller station.

Likes 0	
Dislikes 0	

Response

Thank you for the comment. The proximate station would have no physical security obligations if the applicable substation was protected, as protecting the applicable substation invalidates the physical attack being studied under requirement R5.

Scott Langston - Tallahassee Electric (City of Tallahassee, FL) - 1

Answer	No
Document Name	

Comment

TAL does not agree with a Transmission Owner making a determination on a Transmission station or Transmission substation that they do not have ownership. This should be the responsibility of the station or substation owner to make those determinations.

Likes 0	
Dislikes 0	

Response

Thank you for the comment. It is unclear to the Drafting Team what "making a determination" means. If it means identifying the location of proximate Transmission stations or substations, then identification of ownership is not needed to make such a determination. If "making a determination" implies ascertaining physical security upgrades which have cost implications, the proximate Transmission station or substation has no obligation to protect its site if the applicable Transmission station or substation does so as the result of an R5 risk assessment.

Rachel Schuldt - Black Hills Corporation - 6, Group Name Black Hills Corporation - All Segments

Answer	No
Document Name	

Comment

Black Hills Corporation agrees with EEI's suggestion to strike R2, Part 2.2. R2, Part 2.2 is not needed to meet the primary objectives in the SAR.

Black Hills Corporation also agrees with EEI's suggestion to add examples to the technical rationale describing how to apply the ½ mile distance criteria and line of sight criteria.

Likes 0	
Dislikes 0	

Response

Thank you for the comment. The Drafting Team has reduced the separation requirement, added clarification on the reference point for measurement and added language in the Technical Rationale to explain the reason for the chosen distance. Additionally, they have removed requirements R2.1 and R2.2, which pertained to line-of-sight and ease of access.

Nick Leathers - Nick Leathers On Behalf of: David Jendras Sr, Ameren - Ameren Services, 3, 6, 1; - Nick Leathers

Answer	No
Document Name	

Comment

Ameren would like more clarification around what to do when there are multiple substations close to each other. We would also like more clarification around why surrounding substations are being included. More definition is needed around what conditions are assumed at the remote site, such as the disabling of protection at both ends.

Likes 0	
Dislikes 0	

Response

Thank you for the comment. The Drafting Team has made modifications to the section on substations in proximity to each other and added clarifying language regarding remote clearing. The inclusion of surrounding substations was a requirement of the SAR (Project Scope Item 5).

Lidija Efremova - Lidija Efremova On Behalf of: Emma Halilovic, Hydro One Networks, Inc., 1; - Lidija Efremova

Answer	No
Document Name	

Comment

Further clarification required to stations in proximity.

Understandably the standard is trying to not be too prescriptive. Is the expectation that the TO use their own discretion to determine which stations are impacted by proximity stations? And then take actions accordingly? Could the wording in the standard result in entities all performing their own methodology (from very limited to thorough) which will result in a request to form another SDT to review and be more prescriptive because they are inconsistent.

Clarification is required on what is the expectation and responsibility of a TO inform a neighboring entity they station needs to be reviewed to comply with CIP-014, if it is in proximity. How much can this be enforced by one entity to another. What do we do if its not a transmitter, but a GO.

Likes 0	
Dislikes 0	

Response

Thank you for the comment. The Drafting Team has reduced the separation requirement, added clarification on the reference point for measurement and added language in the Technical Rationale to explain the reason for the chosen distance. Additionally, the DT has removed requirements R2.1 and R2.2, which pertained to line-of-sight and ease of access.

The first balloted draft was more prescriptive than the second and the Drafting Team received many comments to make the second draft less prescriptive.

The proximate station would have no physical security obligations if the applicable substation was protected as protecting the applicable substation invalidates the physical attack being studied under requirement R5.

James Baldwin - James Baldwin On Behalf of: Matt Lewis, Lower Colorado River Authority, 5, 1; - James Baldwin

Answer	No
Document Name	

Comment

Complying with this requirement may present several challenges.

(R2) We believe having a clearly defined proximity criteria of ½ mile is acceptable.

It should be made clear that both sub-requirements (R2.1 and R2.2) are required to be applicable with an “and”.

(R2.1) It may be challenging to establish, document and audit what constitutes as “line of sight”. Factors such as terrain, vegetation, and existing infrastructure can obscure the view. Additionally, these factors may be point-in-time and line of sight could be obscured during initial risk assessment but visible during an Audit site visit.

(R2.2) Assessing the ease of access from roadways requires a thorough understanding of public access. Identifying all routes to a facility, especially in rural or less developed areas, can be challenging.

Also, this requirement may bring new Registered Entities that do not meet R1 into scope. Following the identification of an applicable substation per R2 owned by another Registered Entity, how will a TO ensure that necessary security measures are put in place by the adjacent TO that does not own CIP-014 R1 applicable substations?

Likes 0	
Dislikes 0	

Response

Thank you for the comment. The Drafting Team has reduced the separation requirement, added clarification on the reference point for measurement and added language in the Technical Rationale to explain the reason for the chosen distance. Additionally, they have removed requirements R2.1 and R2.2, which pertained to line-of-sight and ease of access.

The proximate station would have no physical security obligations if the applicable substation was protected as protecting the applicable substation invalidates the physical attack being studied under requirement R5.

Teresa Krabe - Lower Colorado River Authority - 5

Answer	No
Document Name	

Comment

Complying with this requirement may present several challenges.

(R2) We believe having a clearly defined proximity criteria of ½ mile is acceptable.

It should be made clear that both sub-requirements (R2.1 and R2.2) are required to be applicable with an “and”.

(R2.1) It may be challenging to establish, document and audit what constitutes as “line of sight”. Factors such as terrain, vegetation, and existing infrastructure can obscure the view. Additionally, these factors may be point-in-time and line of sight could be obscured during initial risk assessment but visible during an Audit site visit.

(R2.2) Assessing the ease of access from roadways requires a thorough understanding of public access. Identifying all routes to a facility, especially in rural or less developed areas, can be challenging.

Also, this requirement may bring new Registered Entities that do not meet R1 into scope. Following the identification of an applicable substation per R2 owned by another Registered Entity, how will a TO ensure that necessary security measures are put in place by the adjacent TO that does not own CIP-014 R1 applicable substations?

Likes 0	
Dislikes 0	

Response

Thank you for the comment. The Drafting Team has reduced the separation requirement, added clarification on the reference point for measurement and added language in the Technical Rationale to explain the reason for the chosen distance. Additionally, they have removed requirements R2.1 and R2.2, which pertained to line-of-sight and ease of access.

The proximate station would have no physical security obligations if the applicable substation was protected as protecting the applicable substation invalidates the physical attack being studied under requirement R5.

Jamison Cawley - Nebraska Public Power District - 1

Answer	No
Document Name	

Comment

We request clarification of the proximity requirement to be physical distance of ½ mile, not electrical distance.

We request clarification of acceptable proximity obstruction exclusions such as trees, buildings, highway, etc.

Clarify that if an adjacent substation is radial from the substation under study, it is not applicable.

Likes 0	
Dislikes 0	

Response

Thank you for the comment. The Drafting Team has reduced the separation requirement, added clarification on the reference point for measurement and added language in the Technical Rationale to explain the reason for the chosen distance. Additionally, they have removed requirements R2.1 and R2.2, which pertained to line-of-sight and ease of access.

Richard Vendetti - NextEra Energy - 5	
Answer	No
Document Name	
Comment	

NextEra supports the comments provided by EEI below:

EEI provides the following revisions for consideration:

EEI suggests striking Requirement R2, Part 2.2. The Project Scope described in the SAR for Project 2023-06 does not include ease of access as a needed revision to CIP-014-3 but does explicitly include line-of-sight. Ease of access from a common public roadway may be an appropriate consideration in some scenarios, but it is not appropriate in all cases such as rural scenarios where a common public roadway or common roadway does not exist between stations or where an alternative such as the transmission right of way are more likely access paths. The inclusion of the ½ mile distance and line-of-sight requirement address the primary objectives in the SAR, and the “shall address at a minimum” language provides flexibility to consider additional criteria.

Additionally, EEI is concerned with the inclusion of the “irrespective of ownership” language in Requirement R2 because it is not possible to compel non-registered entities, or registered entities that are not subject to CIP-014 to share the information required by the proposed Standard. While we do not have revised language to recommend, we ask the drafting team to consider ways to manage differing ownership that are scoped to registered entities who must comply with CIP-014, or to make revisions that provide flexibility by allowing the Transmission Owner to determine how to manage differing ownership as part of their criteria or methodology.

EEI asks the drafting team to consider adding examples or explanations to the technical rationale describing:

a. ½ mile distance – Please add a justification for selecting ½ mile as the appropriate distance. Clarify if the drafting team intended for the distance to be based on driving distance, or as the crow flies.

b. Line of sight – Please clarify by adding examples of how to apply this. For example, if an entity performed site visits during the summer, line of sight could be impacted by trees/vegetation during the summer that would not impact line of sight during the winter.

Likes 0	
Dislikes 0	

Response

Thank you for the comment. Please see response to EEI comments.

Alan Kloster - Alan Kloster On Behalf of: Jeremy Harris, Evergy, 3, 5, 1, 6; Kevin Frick, Evergy, 3, 5, 1, 6; Marcus Moor, Evergy, 3, 5, 1, 6; Tiffany Lake, Evergy, 3, 5, 1, 6; - Alan Kloster	
Answer	No
Document Name	
Comment	

Evergy supports and incorporates by reference the comments of the Edison Electric Institute for question #2.

Likes 0	

Dislikes 0	

Response
Thank you for the comment. Please see response to EEI comments.

Dave Krueger - SERC Reliability Corporation - 10	
Answer	No
Document Name	

Comment
SERC appreciates the ongoing efforts to refine the CIP-014 Risk Assessment portion of the standard. As commented in previous ballots, SERC believes the removal of subrequirement 2.1 would provide additional clarity as those elements are difficult to measure and may change seasonally and over time, and create an uncertain mix of objective and subjective criteria. SERC also believes that further clarity could be added to the ½ mile threshold in R2, to clarify that ½ mile is the distance between closest substation fencelines or Elements – as some large EHV substations may have nearly ¼ mile or more of fenceline among one side.

Likes 0	
Dislikes 0	

Response
Thank you for the comment. The Drafting Team has reduced the separation requirement, added clarification on the reference point for measurement and added language in the Technical Rationale to explain the reason for the chosen distance. Additionally, they have removed requirements R2.1 and R2.2, which pertained to line-of-sight and ease of access.

TRACEY JOHNSON - Southern Indiana Gas and Electric Co. - 3,5,6 - RF	
Answer	No
Document Name	

Comment
Southern Indiana Gas and Electric Company d/b/a CenterPoint Energy Indiana South (SIGE) supports the comments as submitted by Edison Electric Institute (EEI).

Likes 0	
Dislikes 0	

Response
Thank you for the comment. Please see response to EEI comments.

Kristine Martz - Edison Electric Institute - NA - Not Applicable - NA - Not Applicable	
Answer	No
Document Name	

Comment

EEI provides the following revisions for consideration:

EEI suggests striking Requirement R2, Part 2.2. The Project Scope described in the SAR for Project 2023-06 does not include ease of access as a needed revision to CIP-014-3 but does explicitly include line-of-sight. Ease of access from a common public roadway may be an appropriate consideration in some scenarios, but it is not appropriate in all cases such as rural scenarios where a common public roadway or common roadway does not exist between stations or where an alternative such as the transmission right of way are more likely access paths. The inclusion of the ½ mile distance and line-of-sight requirement address the primary objectives in the SAR, and the "shall address at a minimum" language provides flexibility to consider additional criteria.

Additionally, EEI is concerned with the inclusion of the "irrespective of ownership" language in Requirement R2 because it is not possible to compel non-registered entities, or registered entities that are not subject to CIP-014 to share the information required by the proposed Standard. While we do not have revised language to recommend, we ask the drafting team to consider ways to manage differing ownership that are scoped to registered entities who must comply with CIP-014, or to make revisions that provide flexibility by allowing the Transmission Owner to determine how to manage differing ownership as part of their criteria or methodology.

EEI asks the drafting team to consider adding examples or explanations to the technical rationale describing:

a. ½ mile distance – Please add a justification for selecting ½ mile as the appropriate distance. Clarify if the drafting team intended for the distance to be based on driving distance, or as the crow flies.

b. Line of sight – Please clarify by adding examples of how to apply this. For example, if an entity performed site visits during the summer, line of sight could be impacted by trees/vegetation during the summer that would not impact line of sight during the winter.

Likes 0	
Dislikes 0	

Response

Thank you for the comment. The Drafting Team has reduced the separation requirement, added clarification on the reference point for measurement and added language in the Technical Rationale to explain the reason for the chosen distance. Additionally, they have removed requirements R2.1 and R2.2, which pertained to line-of-sight and ease of access.

The information required from proximate substations can be gathered from other sources (GIS maps, models, etc.) if the proximate facility owner does not provide information and as such, determination of "irrespective of ownership" in the proposed standard is achievable.

Lucinda Bradshaw - Lucinda Bradshaw On Behalf of: Byron Booker, Oncor Electric Delivery, 1; - Lucinda Bradshaw

Answer	No
Document Name	

Comment

Oncor does not agree that the modifications made in CIP-014-4 Requirement R2 to address the issues identified in the SAR because the proposed sub-requirements in R2 are still ambiguous and fail to create the consistent approach in the identification of infrastructure critical to the operation of the BPS as sought with the SAR. Due to varying geographical locations of facilities and the overall flexibility to document the criteria used to determine proximity, inconsistencies in approaches to perform risk assessments will remain. We recommend that R2.1 and R2.2 be replaced with specific and measurable criteria. For example, the Director of National Intelligence Joint Counterterrorism Assessment Team (JCAT) has published bomb threat standoff distances in which the mandatory evacuation distances for an SUV/VAN explosive threat is 400 feet. Guidelines such as these are used by Physical Security Professionals when performing the evaluation required by CIP-014-3 R6. For consistency, we recommend that a distance between 400 feet to 1000 feet be specified in CIP-014-4 R2.

Additionally, we request clarification of the proposed R2 language concerning voltage classes applicable to stations in proximity. While the proposed R2 language points to R1 stations concerning proximity, and R1 points to Attachment 1, in which lines less than 200 kV are not applicable, it is unclear that the same "less than 200 kV" exclusion applies to those facilities that are in physical proximity to facilities to which R1 is applicable. We request that R2 be clarified to state that only facilities above 200 kV and in proximity to applicable facilities under R1 are to be considered.

As revised, R2 now places the burden on a Transmission Owner ("TO") to track those Transmission stations and Transmission substations that are within ½ mile of that TO's own Transmission station or Transmission substation even if they are *owned by other parties*. Not all TOs willingly disclose the exact location of their stations or substations, and some consider the geographic locations of their stations and substations to constitute CEII. Both of these scenarios will impede a TO's ability to obtain the necessary location information. In addition, this proposed approach could present significant issues for entities that are in competition with one another, which is the case in certain areas of Texas in which multiple entities are certificated to provide service in the same geographic area or in areas containing numerous Transmission stations or Transmission substations owned by various entities in close proximity.

We also point out that the language in R2 "that could be impacted by a single physical attack" is too vague and could create significant disparities in how threat assessments are performed in accordance with R2. Under CIP-014-4 R2, each TO would be responsible for determining what an "impact" is and when it could occur. As a result, this vague requirement may create challenges when stations or substations are within the same line of sight from a single location or share access from a common roadway, but are owned by different entities. If those different TO are not aligned in how "impact" is determined and the procedures and processes implemented to ensure compliance with CIP-014-4 R2, then disagreements between those entities on whether their stations or substations could have been impacted by a single physical attack could arise. Such disagreements could make determining compliance with CIP-014-4 R2 for each of the disagreeing entities particularly difficult.

Likes 0	
Dislikes 0	

Response

Thank you for the comment. The Drafting Team has reduced the separation requirement, added clarification on the reference point for measurement and added language in the Technical Rationale to explain the reason for the chosen distance. Additionally, they have removed requirements R2.1 and R2.2, which pertained to line-of-sight and ease of access.

Location of proximate substations can be identified using common public access tools without the need to coordinate with another entity. Additionally, non-BES facilities should not be considered for proximity.

Chantal Mazza - Chantal Mazza On Behalf of: Junji Yamaguchi, Hydro-Quebec (HQ), 1, 5; Nicolas Turcotte, Hydro-Quebec (HQ), 1, 5; - Chantal Mazza

Answer	No
Document Name	

Comment

The NPCC RSC has a concern in the event of two entities disagreeing with a line of sight risk assessment. We suggest adding a common form and/or process to reconcile CIP-014 line of sight assessments disagreements so to avert non-compliance by either entity.

We would recommend issuing formal guidance on a "line of sight" and "common roadway" and how to assess those two terms.

Likes 0	
Dislikes 0	

Response
Thank you for the comment. The Drafting Team has reduced the separation requirement, added clarification on the reference point for measurement and added language in the Technical Rationale to explain the reason for the chosen distance. Additionally, the DT have removed requirements R2.1 and R2.2, which pertained to line-of-sight and ease of access.

Diana Aguas - CenterPoint Energy Houston Electric, LLC - 1 - Texas RE	
Answer	No
Document Name	
Comment	
CenterPoint Energy Houston Electric, LLC (CEHE) believes “line of sight” or “ease of access” in Requirement R2 are arbitrary values and should not be used to comply with NERC requirements. CEHE in general supports the EEI comments and specifically has concerns about the inclusion of the “irrespective of ownership” language in Requirement R2 because it is not possible to compel non-registered entities, or registered entities that are not subject to CIP-014 to share the information required by the proposed Standard. While we do not have revised language to recommend, we ask the drafting team to consider ways to manage differing ownership that are scoped to registered entities who must comply with CIP-014, or to make revisions that provide flexibility by allowing the Transmission Owner to determine how to manage differing ownership as part of their criteria or methodology.	
Likes 0	
Dislikes 0	

Response
Thank you for the comment. The Drafting Team has reduced the separation requirement, added clarification on the reference point for measurement and added language in the Technical Rationale to explain the reason for the chosen distance. Additionally, they have removed requirements R2.1 and R2.2, which pertained to line-of-sight and ease of access. The Drafting Team believes that the information required from proximate substations can be gathered from other sources (GIS maps, models, etc.) if the proximate facility owner does not provide information and as such, determination of “irrespective of ownership” in the proposed standard is achievable.

Clay Walker - Clay Walker On Behalf of: Robert Hirchak, Cleco Corporation, 6, 5, 1, 3; - Clay Walker	
Answer	No
Document Name	
Comment	
Cleco agrees with EEI comments.	
Likes 0	
Dislikes 0	

Response
Thank you for the comment. Please see response to EEI comments.

Stephen Stafford - Stephen Stafford On Behalf of: Greg Davis, Georgia Transmission Corporation, 1; - Stephen Stafford	
Answer	No

Document Name	

Comment

The intent of the requirement is understood and appreciated. However, the nature of the “single physical attack” needs clarification. Interpretations of this attack can range from events where elements are lost with some time delay between failures (gun shots for example) to a simultaneous loss of all elements (large explosion?). Clarity on the nature of the physical attack or parameters that can be applied to define the attack are needed to avoid differing interpretations of what event is to be studied and how this requirement is to be audited.

Additionally, this guidance is appropriately located in the TPL space to clarify to planning entities what type of extreme event needs to be evaluated and subsequently communicated to the Transmission Owner.

Likes 0	
Dislikes 0	

Response

Thank you for the comment. However, the DT notes that the nature of the “single physical attack” is defined by modeling assumptions in Requirements R2 & R3. Please see the Technical Rationale Document for additional information.

Ruida Shu - Northeast Power Coordinating Council - 1,2,3,4,5,6,7,8,9,10 - NPCC, Group Name NPCC RSC

Answer	No
Document Name	

Comment

The NPCC RSC has a concern in the event of two entities disagreeing with a line of sight risk assessment. We suggest adding a common form and/or process to reconcile CIP-014 line of sight assessments disagreements so to avert non-compliance by either entity.

We would recommend issuing formal guidance on a “line of sight” and “common roadway” and how to assess those two terms.

Likes 0	
Dislikes 0	

Response

Thank you for the comment. The Drafting Team has reduced the separation requirement, added clarification on the reference point for measurement and added language in the Technical Rationale to explain the reason for the chosen distance. Additionally, they have removed requirements R2.1 and R2.2, which pertained to line-of-sight and ease of access.

Amy Wesselkamper - PNM Resources - Public Service Company of New Mexico - 3

Answer	No
Document Name	

Comment

PNM and TNMP support EEI comments

Likes 0	

Dislikes 0	

Response

Thank you for the comment. Please see response to EEI comments.

Devin Shines - PPL - Louisville Gas and Electric Co. - 1,3,5,6 - SERC,RF

Answer	No
Document Name	

Comment

LG&E/KU supports most of the modifications in Requirement R2. The 1/2 mile radius provides a clear boundary to the area considered proximate. However, we also support the additional feedback and asks for clarification submitted in EEI's comments.

Likes 0	
Dislikes 0	

Response

Thank you for the comment. Please see response to EEI comments

Gary Trezza - Long Island Power Authority - 1 - NPCC

Answer	No
Document Name	

Comment

This particular requirement does not identify a need for a TO with facilities that meet the requirement to inform an adjacent TO (i.e., a TO that is a different owner) who's facilities fall under the distance identified under R2. It seems unreasonable for a TO to have to assess another TO's facilities or know if their future plans would create an impact to them due to proximity of where the facility is installed. LIPA would suggest adding language requiring TO's who identify facilities under R2 to coordinate and notify adjacent TO's in support of their own assessment.

There is also a concern in the event two different entities disagree with a line of sight risk assessment. We suggest adding a common form and/or process to reconcile CIP-014 line of sight assessments / disagreements so to avert non-compliance by either entity.

We would recommend issuing formal guidance on a "line of sight" and "common roadway" and how to assess those two terms.

Likes 0	
Dislikes 0	

Response

Thank you for the comment. The Drafting Team has reduced the separation requirement, added clarification on the reference point for measurement and added language in the Technical Rationale to explain the reason for the chosen distance. Additionally, they have removed requirements R2.1 and R2.2, which pertained to line-of-sight and ease of
access.

The Drafting Team has structured the draft standard such that collaboration with adjacent entities is allowed but not required to comply with the standard.

Leshel Hutchings - AEP - 3

Answer	No
Document Name	
Comment	
The intent is to identify close physical proximity such that a singular event could impact both stations; other ranges are irrelevant. **Emphasize explicitly in the standard language or Guidelines and Technical Basis that this considers only a single, simultaneous attack**. Considering non-simultaneous attacks makes the number of scenarios infinite and is not feasible to analyze or protect against.	
Likes 0	
Dislikes 0	
Response	
Thank you for your comment. The DT has revised the standard in response to these concerns.	
Nikki Carson-Marquis - Nikki Carson-Marquis On Behalf of: Theresa Allard, Minnkota Power Cooperative Inc., 1; - Nikki Carson-Marquis	
Answer	No
Document Name	
Comment	
MPC concurs with the MRO NSRF's request for clarification.	
Likes 0	
Dislikes 0	
Response	
Thank you for your comment. Please see response to MRO comments.	
Ronald Hoover - Bonneville Power Administration - 1,3,5,6 - WECC	
Answer	No
Document Name	
Comment	
BPA recognizes a significant improvement in the language of R2, however BPA finds the proximity text is still highly subjective. BPA asks "What does the process look like when one Registered Entity brings in owners of other facilities?" BPA sees a potentially dramatic increase in modeling concerns considering multiple Facilities owned by multiple entities. BPA believes there is insufficient detail about expected actions when new Facilities are added due to proximity and recommends adding clarity to the expected actions. As an example, when a new facility is added, a study should be conducted with the option of ruling out the criticality of the new facility. Finally, BPA believes the intent of CIP-014 is changing from identifying a very small number of absolutely critical substations to requiring Registered Entities to expand their lists due to proximity.	
Likes 0	
Dislikes 0	
Response	

Thank you for the comment. The Drafting Team has reduced the separation requirement, added clarification on the reference point for measurement and added language in the Technical Rationale to explain the reason for the chosen distance. Additionally, they have removed requirements R2.1 and R2.2, which pertained to line-of-sight and ease of
access.

Tamarra Hardie - Tamarra Hardie On Behalf of: Diane E Landry, Public Utility District No. 1 of Chelan County, 3, 5, 1, 6; - Public Utility District No. 1 of Chelan County - 6, Group Name CHPD

Answer	No
Document Name	

Comment

The 'line of sight' and 'ease of access' ambiguous term usage concerns remain from the previous draft. However, the removal of the 'close enough proximity' language and the addition of the 'within ½ mile of an applicable Transmission station(s)' was an improvement for R2. This change adds some clarity and removes some ambiguity from this requirement that was present in previous draft versions.

Likes 0	
Dislikes 0	

Response

Thank you for the comment. The Drafting Team has reduced the separation requirement, added clarification on the reference point for measurement and added language in the Technical Rationale to explain the reason for the chosen distance. Additionally, they have removed requirements R2.1 and R2.2, which pertained to line-of-sight and ease of
access.

Jeffrey Streifling - NB Power Corporation - 1

Answer	No
Document Name	

Comment

The NPCC RSC has a concern in the event of two entities disagreeing with a line of sight risk assessment. We suggest adding a common form and/or process to reconcile CIP-014 line of sight assessments disagreements so to avert non-compliance by either entity.

We would recommend issuing formal guidance on a "line of sight" and "common roadway" and how to assess those two terms.

Likes 0	
Dislikes 0	

Response

Thank you for the comment. The Drafting Team has reduced the separation requirement, added clarification on the reference point for measurement and added language in the Technical Rationale to explain the reason for the chosen distance. Additionally, they have removed requirements R2.1 and R2.2, which pertained to line-of-sight and ease of
access.

Erin Wilson - NB Power Corporation - New Brunswick Power Transmission Corporation - 5

Answer	No
Document Name	
Comment	

The NPCC RSC has a concern in the event of two entities disagreeing with a line of sight risk assessment. We suggest adding a common form and/or process to reconcile CIP-014 line of sight assessments disagreements so to avert non-compliance by either entity.

We would recommend issuing formal guidance on a “line of sight” and “common roadway” and how to assess those two terms.

Likes 0	
Dislikes 0	
Response	

Thank you for the comment. The Drafting Team has reduced the separation requirement, added clarification on the reference point for measurement and added language in the Technical Rationale to explain the reason for the chosen distance. Additionally, they have removed requirements R2.1 and R2.2, which pertained to line-of-sight and ease of
access.

Kevin Conway - Western Power Pool - 4

Answer	No
Document Name	
Comment	

The 1/2-mile radius is arbitrary and has no technical justification. This part of the requirement should be removed, and the documented criteria required by R2 should require where substations are within line-of-site and how the threat of a single attack is mitigated through distance or other mitigation.

Likes 0	
Dislikes 0	
Response	

Thank you for the comment. The Drafting Team has reduced the separation requirement, added clarification on the reference point for measurement and added language in the Technical Rationale to explain the reason for the chosen distance. Additionally, they have removed requirements R2.1 and R2.2, which pertained to line-of-sight and ease of access.

Dwanique Spiller - Berkshire Hathaway - NV Energy - 5

Answer	Yes
Document Name	
Comment	

NV Energy appreciates the addition of the ½ mile bright line criteria to remove ambiguity and subjectivity.

NV Energy requests that the SDT provide clarity on the following items:

Clarify in the rationale that the Transmission stations within a ½ mile of an applicable Transmission station is based on distance “as the crow flies” and not electrical distance.

Clarify using examples of what are acceptable proximity exclusion obstructions such as trees, buildings, highway, etc. or is this up to each individual assessment criteria?

Clarify in the rationale if an adjacent substation is radial from the substation under study, then it is not applicable. Add examples to the rationale to address the various scenarios involving a substation under study and any adjacent substations meeting the ½ mile proximity. For example: Are they faulted simultaneously or individually with or without the same damage or inoperability? Are these questions up to each individual assessment methodology?

Likes 0	
Dislikes 0	

Response

Thank you for the comment. The Drafting Team has reduced the separation requirement, added clarification on the reference point for measurement and added language in the Technical Rationale to explain the reason for the chosen distance. Additionally, they have removed requirements R2.1 and R2.2, which pertained to line-of-sight and ease of access.

Based on Attachment 1, radial Transmission stations and Transmission substations are included as part of the assessment.

Daniel Gacek - Exelon - 1

Answer	Yes
Document Name	

Comment

Exelon does not object to the current language of R2. The inclusion of the ½ mile threshold provides beneficial specificity to the requirement. To strengthen the durability of this ½ mile threshold we request the drafting team to add the technical basis for this threshold into the standard.

Submitted on behalf of Exelon - Segments 1 & 3

Likes 0	
Dislikes 0	

Response

Thank you for your comment and suggestion. The threshold has been decreased to 1500 feet or 457 meters (the shortest distance, measured substation fence line to substation fence line), and this has been addressed in the Technical Rationale Document.

Carver Powers - Utility Services, Inc. - 4

Answer	Yes
Document Name	

Comment

For section 2.2, request clarification on “ease of access”. Does a fence, gate, or a speedbump limit the ease of access concern? Recommend providing guidance in either the standard or technical rationale.

Likes 0	
Dislikes 0	

Response

Thank you for your comment.

The Drafting Team has reduced the separation requirement, added clarification on the reference point for measurement and added language in the Technical Rationale to explain the reason for the chosen distance. Additionally, they have removed requirements R2.1 and R2.2, which pertained to line-of-sight and ease of access.

Donna Wood - Tri-State G and T Association, Inc. - 1

Answer	Yes
Document Name	

Comment

Tri-State supports MRO NSRF comments regarding the need for clarity.

Likes 0	
Dislikes 0	

Response

Thank you for your comment. Please see responses to MRO NSRF’s comments.

Ben Hammer - Western Area Power Administration - 1

Answer	Yes
Document Name	

Comment

Please provide R2.1 rationale for line of sight distance as this is likely different than other distances (such as the conductor distance) and could require additional analysis to determine. Also, please identify acceptable obstructions.

Likes 0	
Dislikes 0	

Response

Thank you for your comment.

The Drafting Team has reduced the separation requirement, added clarification on the reference point for measurement and added language in the Technical Rationale to explain the reason for the chosen distance. Additionally, they have removed requirements R2.1 and R2.2, which pertained to line-of-sight and ease of access.

Mark Garza - FirstEnergy - FirstEnergy Corporation - 4, Group Name FE Voter	
Answer	Yes
Document Name	
Comment	
FirstEnergy has no concerns with the proposed R2 for CIP-014-4.	
Likes 0	
Dislikes 0	
Response	
Thank you for your comment and support.	
Brian Millard - Tennessee Valley Authority - 1,3,5,6 - SERC, Group Name TVA RBB	
Answer	Yes
Document Name	
Comment	
The addition of 1/2 mile of applicable Transmission station(s) and Transmission substation(s) provides enough guidance to adhere to 2.1 and 2.2.	
Likes 0	
Dislikes 0	
Response	
Thank you for your comment and support.	
Jodirah Green - ACES Power Marketing - 1,3,4,5,6 - MRO,WECC,Texas RE,SERC,RF, Group Name ACES Collaborators	
Answer	Yes
Document Name	
Comment	
Likes 0	
Dislikes 0	
Response	
Thank you for your support.	
Jennie Wike - Jennie Wike On Behalf of: John Merrell, Tacoma Public Utilities (Tacoma, WA), 1, 4, 5, 6, 3; - Jennie Wike, Group Name Tacoma Power	

Answer	Yes
Document Name	
Comment	
Likes 0	
Dislikes 0	
Response	
Thank you for your support.	
Robert Jones - Seattle City Light - 4	
Answer	Yes
Document Name	
Comment	
Likes 0	
Dislikes 0	
Response	
Thank you for your support.	
Andrew Smith - APS - Arizona Public Service Co. - 5	
Answer	Yes
Document Name	
Comment	
Likes 0	
Dislikes 0	
Response	
Thank you for your support.	
Tim Kelley - Tim Kelley On Behalf of: Charles Norton, Sacramento Municipal Utility District, 3, 6, 4, 1, 5; Foung Mua, Sacramento Municipal Utility District, 3, 6, 4, 1, 5; Kevin Smith, Balancing Authority of Northern California, 1; Nicole Looney, Sacramento Municipal Utility District, 3, 6, 4, 1, 5; Ryder Couch, Sacramento Municipal Utility District, 3, 6, 4, 1, 5; Wei Shao, Sacramento Municipal Utility District, 3, 6, 4, 1, 5; - Tim Kelley, Group Name SMUD and BANC	
Answer	Yes
Document Name	
Comment	

Likes 0	
Dislikes 0	
Response	
Thank you for your support.	
Jessica Cordero - Unisource - Tucson Electric Power Co. - 1	
Answer	Yes
Document Name	
Comment	
Likes 0	
Dislikes 0	
Response	
Thank you for your support.	
Matt Carden - Southern Company - Southern Company Services, Inc. - 1	
Answer	Yes
Document Name	
Comment	
Likes 0	
Dislikes 0	
Response	
Thank you for your support.	
Richard Jackson - U.S. Bureau of Reclamation - 1	
Answer	Yes
Document Name	
Comment	
Likes 0	
Dislikes 0	
Response	
Thank you for your support.	

Sean Steffensen - IDACORP - Idaho Power Company - 1	
Answer	Yes
Document Name	
Comment	
Likes 0	
Dislikes 0	
Response	
Thank you for your support.	
Rebika Yitna - Rebika Yitna On Behalf of: Roger Brand, MEAG Power, 3, 1; - Rebika Yitna	
Answer	Yes
Document Name	
Comment	
Likes 0	
Dislikes 0	
Response	
Thank you for your support.	
Joshua London - Eversource Energy - 1, Group Name Eversource	
Answer	Yes
Document Name	
Comment	
Likes 0	
Dislikes 0	
Response	
Thank you for your support.	
James Keele - Entergy - 3	
Answer	Yes
Document Name	
Comment	

Likes 0	
Dislikes 0	
Response	
Thank you for your support.	
Matthew Nicklin - Southern Illinois Power Cooperative - 1,3,5 - SERC	
Answer	Yes
Document Name	
Comment	
Likes 0	
Dislikes 0	
Response	
Thank you for your support.	
Mark Flanary - Midwest Reliability Organization - 10	
Answer	Yes
Document Name	
Comment	
Likes 0	
Dislikes 0	
Response	
Thank you for your support.	
Rachel Coyne - Texas Reliability Entity, Inc. - 10	
Answer	
Document Name	
Comment	
Texas RE recommends R2 be clarified to state “within ½ mile of **straight areal distance from** an applicable transmission station or transmission substation documented in Requirement R1.	
Likes 0	
Dislikes 0	
Response	

Thank you for your comment.

The Drafting Team has reduced the separation requirement, added clarification on the reference point for measurement and added language in the Technical Rationale to explain the reason for the chosen distance. Additionally, they have removed requirements R2.1 and R2.2, which pertained to line-of-sight and ease of access.

3. Do you agree with the modifications made in CIP-014-4 with new Requirement R3 to address the issues identified in the SAR?

Kevin Conway - Western Power Pool - 4

Answer	No
Document Name	

Comment

The loss of any single substation under R3 is essentially studied as part of the TPL standards yearly. The R3 requirement should be limited to those facilities identified in R2. This avoids duplication of other standards and work, especially for smaller organizations that do not have dedicated planning staff.

Transmission Owners do not have planning staff to do steady-state and dynamic studies, that is a Transmission Planner function. Transmission Owners are responsible to build and maintain transmission assets. R3 should be focused on Transmission Planners to complete these studies and distribute them to the TO entities to implement action plans when there are negative findings. TOs should be required to provide information needed to the Transmission Planners so the studies can be relevant and accurate.

Likes 0	
Dislikes 0	

Response

Thank you for your comments. While similar, the event studied in CIP-014 is different from the NERC Category P5 contingency studied in TPL-001-5. For instance, TPL-001 contingencies due to unspecified causes, whereas CIP-014 is focused specifically on physical attacks. Additionally, TPL-001 focuses on system reliability, whereas CIP-014 focuses on the reliability and stability of an Interconnection. For these reasons alone, the DT believes that the assumptions for each should be separate and distinct from each other.

The addition of Transmission Planner to the Applicability section is outside of the scope of the Project 2023-06 SAR.

Erin Wilson - NB Power Corporation - New Brunswick Power Transmission Corporation - 5

Answer	No
Document Name	

Comment

We recommend removing the word “proximity” and making it consistent with R2 wording.

We recommend the SDT to consider that planning and simulation studies (Part 3.1) are not solely be located in a physical security standard regardless of how load is lost (hurricane, fire, earthquake, physical attack, etc.)

We also recommend removing “proximity” from 3.3 and make it consistent with the rest of the standard.

Likes 0	
Dislikes 0	

Response

Thank you for your comment.

The use of “proximity” in requirement R3.3 is not intended to define a term but is used only in a descriptive sense.
The DT believes that the word “proximate” in Requirement R2 and the word “proximity” in Requirement R3 are in agreement.

The scope of this standard is limited to physical security.

Jeffrey Streifling - NB Power Corporation - 1	
Answer	No
Document Name	

Comment

We recommend removing the word “proximity” and making it consistent with R2 wording.

We recommend the SDT to consider that planning and simulation studies (Part 3.1) are not solely be located in a physical security standard regardless of how load is lost (hurricane, fire, earthquake, physical attack, etc.)

We also recommend removing “proximity” from 3.3 and make it consistent with the rest of the standard.

Likes 0	
Dislikes 0	

Response

Thank you for your comment.

The use of “proximity” in requirement R3.3 is not intended to define a term but is used only in a descriptive sense.

The scope of this standard is limited to physical security.

Mark Flanary - Midwest Reliability Organization - 10	
Answer	No
Document Name	

Comment

A suggestion for R3.1: As currently written the terms "instability, uncontrolled separation, or Cascading within an Interconnection" are unclear within the context of a given Entity and do not provide a solid basis for the Entity to implement their program or for oversight to compare. MRO recommends that the Entity be required to define these terms in the context of the studies within their system and to identify criteria when "instability, uncontrolled separation, or Cascading within an Interconnection" occur.

A suggestion for R3.2: MRO finds the term "more likely to contribute" to be vague and subjective. Consider enhancing by adding the requirement to document the rationale for the condition selections; for example justification based on historical events, and conditions identified in other studies.

The proposed language for R3.3 motivates MRO's negative vote on this draft. Specifically, the use of the term "fault" opens the door to the usage of less severe faults. We recommend changing "fault" to "a fault that will cause the most severe consequences at that substation" to ensure the most serious scenario is studied. We believe the currently drafted language will reduce the effectiveness of the standard.

Likes 0	

Dislikes 0	

Response

Thank you for the comment.

The Drafting Team has reduced the level of specificity with regard to reliability criteria based on numerous comments from industry and thus chose not to define instability, uncontrolled separation, or Cascading.

“More likely to contribute” has been removed from the standard.

The DT believes that simulation of a fault is a reasonable assumption for possible events that could impact a single Transmission station or Transmission substation, and for events that could simultaneously impact multiple Transmission stations or Transmission substations. The DT does not believe that specification of fault type (e.g., 3-phase faults or single-line-to-ground faults) was mandated by the SAR, and furthermore believes that such a specification is a) too prescriptive and b) potentially creates scenarios that do not match up with plausible threat vectors assessed and managed by corporate security personnel complying with CIP-014 Requirements R7 – R10. The DT furthermore believes that simulation of a no-fault event is not a reasonable assumption for physical attacks under CIP-014. While plausible, no-fault events are not in keeping with the direction of the SAR.

Tamarra Hardie - Tamarra Hardie On Behalf of: Diane E Landry, Public Utility District No. 1 of Chelan County, 3, 5, 1, 6; - Public Utility District No. 1 of Chelan County - 6, Group Name CHPD

Answer	No
Document Name	

Comment

The ‘line-of-sight’ and ‘ease of access’ term usage concerns mentioned in comment section 2 above also applies to R3 since R3.3 refers to R2 station applicability. However, edits to R3.4.2 appear to provide more flexibility to entities and are an improvement from the previous draft version.

Likes 0	
Dislikes 0	

Response

Thank you for the comment. The DT agreed with the industry that the terms “Line of sight” and “ease of access” are too vague, therefore these terms have been removed from the standard. Instead, the DT clarified the issue of proximity in Requirements R2 and R3.

James Keele - Entergy - 3

Answer	No
Document Name	

Comment

[R3.3] states the analysis should include a fault at the R1 applicable station and a fault at any proximate R2 station. [R3.4] states the fault simulation should assume loss of communication and protection system at the station being studied. Existing language is not clear whether one is to assume loss of protection system on only the proximate facility or both the applicable and proximate facility at the same time.

Adrian Lazo:

[R3.4.2.] Consider removal of the word “more” in requirement. “More conservative” implies the actual clearing times are known and you then assume a more conservative value. However, you would use a conservative estimate when the actual clearing times are not known.

3.4.2. Actual or more conservative estimates of clearing times shall be used unless otherwise technically substantiated.

Adrian Lazo:

[R3.2.2.] Adding unstable generators tripped from the dynamic stability study to the steady-state contingency definition would create overly conservative results. Historically, both studies have been done in parallel and not directly informed each other.

Steady-state studies typically assume constant power loads where power does not vary with changes in voltage magnitude. This is a valid assumption for steady state studies but in reality, loads do not behave this way and differs greatly from how loads are represented in dynamic studies.

For dynamic studies the composite load model (CMLD) has seen increased adoption among utilities and more accurately reflects the aggregate behavior of motors. The model includes parameters which dictate fractions of the motor load components that do not restart, even if voltage recovers above the undervoltage trip thresholds. There is currently no industry consensus on whether this fraction of non-restart able motor loss is consequential or non-consequential load loss. Entergy’s stance is that this is consequential load loss as it’s impossible to prevent and would occur even for normally cleared faults due to typical undervoltage time delays of 2-3 cycles. Consequential load loss is commonly excluded from steady-state load loss criteria.

In summary, reflecting tripped generators from the stability study to the steady-state study would only make sense if loads were also reduced by the fraction of non-restart able motor loss. This would be extremely tedious as there is currently no practical way to achieve this with the tools available to Transmission Planners. There may be other issues that may need to be considered. Removal of the “including any tripped elements from dynamic simulations” language or a written exclusion for unstable generators should be considered.

Likes 0	
Dislikes 0	

Response

The DT believes that the language as currently proposed is appropriate. While there are commonly used generic clearing times for remote clearing that are consistent across the industry, actual clearing times can be shorter or longer depending on conditions and design considerations at an individual Transmission Owner. The difference of a few cycles can have a significant impact on the transient behavior of generating units, therefore, it is required that the risk analysis use actual or more conservative clearing time. Please see the Technical Rationale for further clarification.

Requirement R3.2.2 was removed from the standard.

Joshua London - Eversource Energy - 1, Group Name Eversource

Answer	No
Document Name	

Comment

Eversource has concerns with the phrase “other unacceptable post-event response within an Interconnection” in R3.1.1. A Transmission Planner may not know what is considered acceptable post-event response for an entire Interconnection. Direction on how to coordinate with the entire Interconnection or a minimum expectation should be provided. For example, Eversource is located in ISO New England; ISO New England may have certain acceptable frequency of 58 Hz but Pennsylvania may have a stricter 59 Hz limit, unbeknownst to the Transmission Planner. Another example

would be power flow, where an acceptable amount of generation loss would not be known for an entire Interconnection, as impacts could occur outside the TP's immediate area.

Likes 0	
Dislikes 0	

Response

Thank you for your comment. This language has been removed from the standard.

Ronald Hoover - Bonneville Power Administration - 1,3,5,6 - WECC

Answer	No
Document Name	

Comment

BPA believes section 3.2.2 will significantly increase the steady state processes and consequently increase overall costs. BPA finds the wording of 3.2.2 is too prescriptive, therefore the language should be removed.

Likes 0	
Dislikes 0	

Response

Thank you for your comment. Requirement R3.2.2 was removed from the standard.

Nikki Carson-Marquis - Nikki Carson-Marquis On Behalf of: Theresa Allard, Minnkota Power Cooperative Inc., 1; - Nikki Carson-Marquis

Answer	No
Document Name	

Comment

MPC concurs with the MRO NSRF's request for clarification.

Likes 0	
Dislikes 0	

Response

Thank you for your comment. Please see the DT's response to MRO NSRF's comments.

Leshel Hutchings - AEP - 3

Answer	No
Document Name	

Comment

1. Please either remove 3.1.1 or merge it into 3.1.
2. The phrase “other unacceptable post-event response within an interconnection” in 3.1.1 should be limited to instability, uncontrolled separation, or Cascading. This phrase is too open ended and ill-defined. It is enough to now be adding generation loss and load loss to the instability, uncontrolled separation, and Cascading of the approved version. The SDT now has five measures of station criticality; there is no need to open the door for more. Therefore, please replace this phrase with “instability, uncontrolled separation, or cascading” or remove it entirely.
3. For clarity, we suggest expanding 3.1 to a numbered list as follows: “Technically supported thresholds and rationale for determining: 3.1.1 the amount of acceptable load loss, 3.1.2 the amount of acceptable generation loss, 3.1.3 post-event response resulting in instability having a critical impact on the operation of the interconnection, 3.1.4 uncontrolled separation, and 3.1.5 Cascading”
4. The phrase “System conditions that are more likely to contribute” in 3.2 is too open ended and ill-defined. Please replace this with “one System peak load case or System off-peak load case, whichever may be more likely to contribute...”
5. 3.2.2. Feeding dynamic outages into steady state cases will lead to significant nonconvergence issues in steady state if applied in the contingency or even if a base case is created with these outages because the appropriate timing delay cannot be reflected. If outages are applied individually and manually post-contingency this will be a significant increase in the burden of the steady state analysis.

Likes 0	
Dislikes 0	

Response

Thank you for your comment.

1. Requirement R3.1.1 has been removed from the standard.

2. “Other unacceptable post-even response…” language has been removed from the standard.

3. Requirement R3.1 has been revised. Please see proposed changes.

4. The DT has removed the phrase and modified the sub-Requirement as: A provision that steady-state and dynamic simulations shall each be performed using a System peak Load case and a System Off-Peak Load case.

5. Requirement R3.2.2 has been removed from the standard.

Ben Hammer - Western Area Power Administration - 1

Answer	No
Document Name	

Comment

Please consider language that is clear/specific regarding what is required, at a minimum, to meet the requirements of the standard. Having language in a requirement saying “and any additional considerations recognized as” and “that are more likely to” are too general and broad. This introduces challenges, inconsistencies, and confusion regarding what specifically must be considered in order to meet compliance with the requirement.

Suggested language is provided below. Reordering of the subparts of Requirement R3 should be considered depending on the language that is ultimately chosen.

R3. Each Transmission Owner shall have a documented risk assessment methodology for evaluating the loss due to a physical attack of each applicable Transmission station(s) and Transmission substation(s) documented in Requirement R1 and Transmission substation(s) or Transmission station(s) determined to be in proximity per Requirement R2. The methodology shall include, at a minimum, the following:

3.1. Technical rationale for determining the amount of acceptable post-event load loss and generation loss.

3.2. The criteria or methodology used to identify instability, uncontrolled separation, or Cascading within an Interconnection.

3.3 Rationale for the System conditions selected for performing the studies.

3.4 For each applicable Transmission station or Transmission substation listed in accordance with Requirement R1, analysis shall include the following:

3.4.1. A Fault at the applicable Transmission station or Transmission substation and each Transmission station or Transmission substation identified in accordance with Requirement R2 as being in proximity to the applicable Transmission station or Transmission substation.

3.4.2. The removal of all Elements that the Protection System and other automatic controls are expected to disconnect for each event.

3.4.3. Steady-state simulations shall include any additional tripped Elements identified from the dynamic simulation of an event.

3.4.4. Dynamic simulations that assume the loss of communication and the Protection System at the Transmission station(s) or Transmission substation(s) shall use the following:

3.4.4.1 Delayed (remote-end) clearing times unless otherwise technically substantiated.

3.4.4.2 Actual or more conservative estimates of clearing times unless otherwise technically substantiated.

Likes 0	
Dislikes 0	

Response

Thank you for your comment. The DT believes that the majority of these suggestions are organizational rather than substantial. In particular, the DT notes that Western Area Power Administration's proposed R3.4 and R3.4.1 do not adequately address how to simulate fault scenarios for both lists identified as part of Requirements R1 and R2, and for that reason the DT has elected to proceed with the 3rd draft Requirement R3 as posted. Please see the latest Requirement R3 language and the latest Technical Rationale document for additional detail.

Gary Trezza - Long Island Power Authority - 1 - NPCC

Answer	No
Document Name	

Comment

a) We recommend removing the word “proximity” from R2 and R 3.3 and making the wording consistent with the R2 wording.

b) The wording for R3.2, R3.3 and R3.4 is written a little out of context with the intent of R3, which is to develop a documented risk assessment methodology. It is recommended to consider moving R3.2, R3.3 and R3.4 to be sub-requirements of R5.

Likes 0	
Dislikes 0	

Response

Thank you for your comment.

The use of “proximity” in requirement R3.3 is not intended to define a term but is used only in a descriptive sense. The DT believes that the word “proximate” in Requirement R2 and the word “proximity” in Requirement R3 are in agreement.

Requirements R3.2, R3.3 and R3.4 should be defined in the methodology before they're studied as part of the R5 risk assessment.

Rebika Yitna - Rebika Yitna On Behalf of: Roger Brand, MEAG Power, 3, 1; - Rebika Yitna

Answer	No
Document Name	

Comment

Additional clarity (explanation) is requested for R3, 3.3 regarding the intent of the language for analysis that includes a Fault ("…analysis shall include a Fault at the applicable Transmission station…") since there could be different interpretations within the industry.

Likes 0	
Dislikes 0	

Response

Thank you for your comment. Due to the comments received from the industry from the previous ballot, the DT has removed the specificity regarding the type of Fault to apply.

Matt Carden - Southern Company - Southern Company Services, Inc. - 1

Answer	No
Document Name	

Comment

Southern Company appreciates the efforts the drafting team made to add flexibility to the simulation of a physical attack as it pertains to Requirement R3.3. However, the SAR differentiates the CIP-014 assessment from other planning assessments in that "the risk assessment requires the entire transmission station to be considered as rendered inoperable or damaged as the result of physical attack rather than just particular elements electrically connected to a single electrical disturbance."

Southern Company requests the SDT add more clarity to Requirement R3.3 to address this portion of the SAR while still maintaining some flexibility that was evident in this draft. Otherwise, we are concerned the industry will have vastly different interpretations of this requirement that lead to inconsistency in analysis and verification.

Likes 0	
Dislikes 0	

Response

Thank you for your comment. Please see the DT's response to the MRO NSRF comments. Greater specificity for this requirement was rejected in the previous ballot.

Amy Wesselkamper - PNM Resources - Public Service Company of New Mexico - 3

Answer	No
Document Name	

Comment

PNM and TNMP support EEI comments. Additionally, language in 3.2 seems quite vague. What are “conditions that are more likely to contribute to”? Please consider adding technical rationale/guidance.

Likes 0	
Dislikes 0	

Response

Thank you for your comment. Please see the DT’s response to EEI comments. Additionally, the DT has modified the requirement to remove “conditions that are more likely…” language and instead added “using a System peak Load case and a System Off-Peak Load case”.

Jessica Cordero - Unisource - Tucson Electric Power Co. - 1

Answer	No
Document Name	

Comment

If an identified site is found to cause instability, uncontrolled separation, or Cascading within an Interconnection when rendered inoperable or damaged as a result of a physical attack during steady state analysis, then there should be no reason to perform dynamic analysis on that site.

Likes 0	
Dislikes 0	

Response

Thank you for your comment. The DT has added clarifying language to allow the entity to forego dynamic analysis if steady state analysis indicates a site is found to cause instability, uncontrolled separation or Cascading within an Interconnection when rendered inoperable or damaged.

Ruida Shu - Northeast Power Coordinating Council - 1,2,3,4,5,6,7,8,9,10 - NPCC, Group Name NPCC RSC

Answer	No
Document Name	

Comment

We recommend removing the word “proximity” and making it consistent with R2 wording.

We recommend the SDT to consider that planning and simulation studies (Part 3.1) are not solely be located in a physical security standard regardless of how load is lost (hurricane, fire, earthquake, physical attack, etc.)

We also recommend removing “proximity” from 3.3 and make it consistent with the rest of the standard.

The NPCC RSC has concerns with the phrase “other unacceptable post-event response within an Interconnection” in R3.1.1. A Transmission Planner may not know what is considered acceptable post-event response for an entire Interconnection. Direction on how to coordinate with the entire Interconnection or a minimum expectation should be provided. For example, a company is located in ISO New England; ISO New England may have certain acceptable frequency of 58 Hz, but Pennsylvania may have a stricter 59 Hz limit, unbeknownst to the Transmission Planner. Another example would be power flow, where an acceptable amount of generation loss would not be known for an entire Interconnection, as impacts could occur outside the TP’s immediate area.

Likes 0	

Dislikes 0	

Response

Thank you for your comment.

The use of “proximity” in requirement R3.3 is not intended to define a term but is used only in a descriptive sense.

Requirement R3.1.1 has been removed from the draft standard.

Stephen Stafford - Stephen Stafford On Behalf of: Greg Davis, Georgia Transmission Corporation, 1; - Stephen Stafford

Answer	No
Document Name	

Comment

Developing steady-state and dynamic simulation criteria is a planning function and should not be required of a Transmission Owner. The sub-requirements go further into addressing what a transmission planning study should include but applies this requirement incorrectly to the Transmission owner. The intent of R3 is more appropriately applicable to the TPL body of standards. CIP-014 should reference output from a study performed in accordance with a clearly defined TPL requirement for an extreme event involving the loss of an applicable Transmission station(s) or substation(s).

Likes 0	
Dislikes 0	

Response

Thank you for your comments. The Drafting Team believes that this suggestion is out of scope for Project 2023-06.

Clay Walker - Clay Walker On Behalf of: Robert Hirchak, Cleco Corporation, 6, 5, 1, 3; - Clay Walker

Answer	No
Document Name	

Comment

Cleco agrees with EEI comments.

Likes 0	
Dislikes 0	

Response

Thank you for your comment. Please see the DT’s response to EEI’s comments.

Diana Aguas - CenterPoint Energy Houston Electric, LLC - 1 - Texas RE

Answer	No
Document Name	

Comment

CEHE supports EEI's comments for requirements 3.1 and 3.3. In addition, CEHE has concerns with planning assessments to simulate "the loss of communications and system protection" as listed in Requirement 3, part R3.4. CEHE believes it is an unnecessary burden on TPs, where now TPs are required to perform steady state assessments but also stability simulations. The loss of any single substation under R3 is already studied annually as part of TPL standards. Requirement R3, Part 3.2.2 goes beyond the scope of what is documented in the SAR by requiring additional steady-state analysis after the steady-state and dynamic simulations show acceptable system response. The SAR specifically states that "[t]o ensure that a station is effectively identified as non-critical, registered entities need to have performed both steady-state and dynamic studies" but does not go into further detail about performing another steady-state analysis that includes any tripped Elements from the dynamic simulations. We suggest striking Requirement R3, Part 3.2.2.

Likes 0	
Dislikes 0	

Response

Thank you for your comment. Please see the DT's response to EEI's comments.

Requirement R3.2.2 has been removed from the proposed standard.

Chantal Mazza - Chantal Mazza On Behalf of: Junji Yamaguchi, Hydro-Quebec (HQ), 1, 5; Nicolas Turcotte, Hydro-Quebec (HQ), 1, 5; - Chantal Mazza

Answer	No
Document Name	

Comment

We recommend removing the word "proximity" and making it consistent with R2 wording.

We recommend the SDT to consider that planning and simulation studies (Part 3.1) are not solely be located in a physical security standard regardless of how load is lost (hurricane, fire, earthquake, physical attack, etc.)

We also recommend removing "proximity" from 3.3 and make it consistent with the rest of the standard.

The NPCC RSC has concerns with the phrase "other unacceptable post-event response within an Interconnection" in R3.1.1. A Transmission Planner may not know what is considered acceptable post-event response for an entire Interconnection. Direction on how to coordinate with the entire Interconnection or a minimum expectation should be provided. For example, a company is located in ISO New England; ISO New England may have certain acceptable frequency of 58 Hz, but Pennsylvania may have a stricter 59 Hz limit, unbeknownst to the Transmission Planner. Another example would be power flow, where an acceptable amount of generation loss would not be known for an entire Interconnection, as impacts could occur outside the TP's immediate area.

Likes 0	
Dislikes 0	

Response

Thank you for your comment.

The use of "proximity" in requirement R3.3 is not intended to define a term but is used only in a descriptive sense.

Requirement R3.1.1 has been removed from the draft standard.

Lucinda Bradshaw - Lucinda Bradshaw On Behalf of: Byron Booker, Oncor Electric Delivery, 1; - Lucinda Bradshaw	
Answer	No
Document Name	
Comment	
The referenced “System conditions that are more likely to contribute to instability, uncontrolled separation, or Cascading within an Interconnection” mentioned in R3.2 need to be clarified. In ERCOT, a TO can explain why it selected the study cases it did, but each utility can only select those cases based on its experience with its own system. If there are specific “System conditions” that need to be studied, those “System conditions” should be specified and explained in R3.2.	
Likes 0	
Dislikes 0	
Response	
Thank you for your comment. The Drafting Team has updated the model requirements language in Requirement R3.2.	
Andrew Smith - APS - Arizona Public Service Co. - 5	
Answer	No
Document Name	
Comment	
AZPS agrees with EEI’s comments regarding the inclusion of load loss and generation loss within Part 3.1 which is not required by the SAR. Additionally, AZPS supports EEI’s proposed language to resolve this issue.	
Likes 0	
Dislikes 0	
Response	
Thank you for your comment. Please see the DT’s response to EEI’s comments.	
Kristine Martz - Edison Electric Institute - NA - Not Applicable - NA - Not Applicable	
Answer	No
Document Name	
Comment	
EEI proposes the following revisions for consideration: The term “proximity” is not used in Requirement R2. EEI suggests removing it from Requirement R3 and its sub parts. R3. Each Transmission Owner shall have a documented risk assessment methodology, including criteria for steady-state and dynamic simulations, for evaluating the loss due to a physical attack of each applicable Transmission station(s) and Transmission substation(s) documented in Requirement R1	

and Transmission substation(s) or Transmission station(s) determined per Requirement R2. The methodology shall include, at a minimum, the following:

Requirement R3, Parts 3.1 and 3.1.1 include duplicative concepts that could lead to confusion implementing and/or documenting the requirement parts. As an example, Requirement R3 requires the Transmission Owner to have a documented risk assessment methodology, including criteria for steady-state and dynamic simulations. Requirement R3, Part 3.1 requires the methodology to include technically supported thresholds and rationale, and Part 3.1.1 restates the requirement for the technical rationale to include steady-state and dynamic system response to events. EEI suggests consolidating the requirement parts as written below:

3.1 Technically supported thresholds and rationale for determining the amount of acceptable load loss, the amount of acceptable generation loss post-event response, and any additional considerations recognized as resulting in instability, uncontrolled separation, or Cascading within an Interconnection.

Requirement R3, Part 3.2.2 goes beyond the scope of what is documented in the SAR by requiring additional steady-state analysis after the steady-state and dynamic simulations show acceptable system response. The SAR specifically states that "[t]o ensure that a station is effectively identified as non-critical, registered entities need to have performed both steady-state and dynamic studies" but does not go into further detail about performing another steady-state analysis that includes any tripped Elements from the dynamic simulations. We suggest striking Requirement R3, Part 3.2.2.

Requirement R3, Part 3.3 could be further clarified and reference to proximity should be removed in favor the reference to R2, we suggest the following language:

3.3 For each applicable Transmission station or Transmission substation listed in accordance with Requirement R1, analysis shall include a Fault **in the simulation** at the applicable Transmission station or Transmission substation and **then at** each Transmission station or Transmission substation identified in accordance with Requirement R2.

Requirement R3, Part 3.4 is not clear as written. If the intention of the drafting team is for 3.4 to require fault simulations that assume the loss of communication and Protection System at all of the Transmission station(s) or Transmission substation(s) studied under Requirements R3, Parts 3.2 and 3.3 simultaneously, we suggest the following revision:

3.4. Fault simulations that assume the loss of communication and Protection System at **all of** the Transmission station(s) or Transmission substation(s) studied under Requirement R3, Parts 3.2 and 3.3.

EEI appreciates that drafting team's revision to Requirement R3, Part 3.4.2 to provide flexibility in the clearing times used, however, by stating "Actual or more conservative" entities will still need to calculate the actual clearing times in order to validate that the estimates are more conservative. We suggest:

3.4.2. Actual or conservative estimates of clearing times shall be used unless otherwise technically substantiated.

Likes 0	
Dislikes 0	

Response

Thank you for your comment.

The use of "proximity" in requirement R3.3 is not intended to define a term but is used only in a descriptive sense.

Requirement R3.1.1 has been removed from the draft standard.

Requirement R3.2.2 has been removed from the draft standard.

Modifications and clarifications have been made to Requirements R3.3 and R3.4. Please see draft standard.

The DT believes that “more” is a necessary clarifying term in Requirement R3.4.2. While there are commonly used generic clearing times for remote clearing that are consistent across the industry, actual clearing times can be shorter or longer depending on conditions and design considerations at an individual Transmission Owner. The difference of a few cycles can have a significant impact on the transient behavior of generating units, therefore, it is required that the risk analysis use actual or more conservative clearing time

TRACEY JOHNSON - Southern Indiana Gas and Electric Co. - 3,5,6 - RF

Answer	No
Document Name	

Comment

Southern Indiana Gas and Electric Company d/b/a CenterPoint Energy Indiana South (SIGE) supports the comments as submitted by Edison Electric Institute (EEI).

Likes 0	
Dislikes 0	

Response

Thank you for your comment. Please see the DT’s response to EEI’s comments.

Jennie Wike - Jennie Wike On Behalf of: John Merrell, Tacoma Public Utilities (Tacoma, WA), 1, 4, 5, 6, 3; - Jennie Wike, Group Name Tacoma Power

Answer	No
Document Name	

Comment

Tacoma Power supports the changes. However, there does not appear to be an existing requirement within TPL-008, TPL-001, or MOD-032 for a TO with a non-applicable substation to provide sufficient detail about backup relaying schemes to an adjacent TO in order to fulfill R3.2.1. We recommend the standard drafting team ensure there is adequate access to relaying information via a request chain from the TO to PC to adjacent PC to TO.

Likes 0	
Dislikes 0	

Response

Thank you for your comment. NERC standard PRC-027 has similar requirements around communication and coordination of protection settings. Given this, the DT believes that it is appropriate to require similar details for CIP-014.

Dave Krueger - SERC Reliability Corporation - 10

Answer	No
Document Name	

Comment

SERC appreciates the ongoing efforts to refine the CIP-014 Risk Assessment portion of the standard. SERC believes the elimination of the specific details in previous requirements 3.4 and 3.5 and the use of the single word ‘fault’, that the standard has drifted from having clarity and consistency in the requirements of how such extreme events are simulated across different utilities, contrary to the specificity mentioned in SAR Scope item 3 and without

explanation in the Technical Rationale for the change. There is also no visible consideration or measurement of the reliability risks of excluding certain fault types from these forward-looking studies, nor an ongoing mechanism in R3.3 for historic analysis of faults as proposed by some other commenters.

Likes 0	
Dislikes 0	

Response

Thank you for the comment. The DT does not agree with specifying or excluding certain Fault types to be studied, or with requiring historic analysis of Faults.

Alan Kloster - Alan Kloster On Behalf of: Jeremy Harris, Evergy, 3, 5, 1, 6; Kevin Frick, Evergy, 3, 5, 1, 6; Marcus Moor, Evergy, 3, 5, 1, 6; Tiffany Lake, Evergy, 3, 5, 1, 6; - Alan Kloster

Answer	No
Document Name	

Comment

Evergy supports and incorporates by reference the comments of the Edison Electric Institute for question #3.

Likes 0	
Dislikes 0	

Response

Thank you for your comment. Please see the DT's response to EEI's comments.

Richard Vendetti - NextEra Energy - 5

Answer	No
Document Name	

Comment

NextEra supports the comments provided by EEI below:

EEI proposes the following revisions for consideration:

The term "proximity" is not used in Requirement R2. EEI suggests removing it from Requirement R3 and its sub parts.

R3. Each Transmission Owner shall have a documented risk assessment methodology, including criteria for steady-state and dynamic simulations, for evaluating the loss due to a physical attack of each applicable Transmission station(s) and Transmission substation(s) documented in Requirement R1 and Transmission substation(s) or Transmission station(s) determined to be in proximity per Requirement R2. The methodology shall include, at a minimum, the following:

Requirement R3, Parts 3.1 and 3.1.1 include duplicative concepts that could lead to confusion implementing and/or documenting the requirement parts. As an example, Requirement R3 requires the Transmission Owner to have a documented risk assessment methodology, including criteria for steady-state and dynamic simulations. Requirement R3, Part 3.1 requires the methodology to include technically supported thresholds and rationale, and Part 3.1.1 restates the requirement for the technical rationale to include steady-state and dynamic system response to events. EEI suggests consolidating the requirement parts as written below:

1.1 Technically supported thresholds and rationale for determining the amount of acceptable load loss, the amount of acceptable generation loss post-event response, and any additional considerations recognized as resulting in instability, uncontrolled separation, or Cascading within an Interconnection. The technical rationale shall include:

1.1.1 Steady-state and dynamic system response to events that could lead to load loss, generation loss, and other unacceptable post-event response

Requirement R3, Part 3.2.2 goes beyond the scope of what is documented in the SAR by requiring additional steady-state analysis after the steady-state and dynamic simulations show acceptable system response. The SAR specifically states that "[t]o ensure that a station is effectively identified as non-critical, registered entities need to have performed both steady-state and dynamic studies" but does not go into further detail about performing another steady-state analysis that includes any tripped Elements from the dynamic simulations. We suggest striking Requirement R3, Part 3.2.2.

Requirement R3, Part 3.3 could be further clarified and reference to proximity should be removed in favor the reference to R2, we suggest the following language:

3.3 For each applicable Transmission station or Transmission substation listed in accordance with Requirement R1, analysis shall include a Fault **in the simulation** at the applicable Transmission station or Transmission substation and **then at** each Transmission station or Transmission substation identified in accordance with Requirement R2 as being in proximity to the applicable Transmission station or Transmission substation.

Requirement R3, Part 3.4 is not clear as written. If the intention of the drafting team is for 3.4 to require fault simulations that assume the loss of communication and Protection System at all of the Transmission station(s) or Transmission substation(s) studied under Requirements R3, Parts 3.2 and 3.3 simultaneously, we suggest the following revision:

3.4. Fault simulations that assume the loss of communication and Protection System at **all of** the Transmission station(s) or Transmission substation(s) studied under Requirement R3, Parts 3.2 and 3.3.

EEI appreciates that drafting team's revision to Requirement R3, Part 3.4.2 to provide flexibility in the clearing times used, however, by stating "Actual or more conservative" entities will still need to calculate the actual clearing times in order to validate that the estimates are more conservative. We suggest:

3.4.2. Actual or more conservative estimates of clearing times shall be used unless otherwise technically substantiated.

Likes 0	
Dislikes 0	

Response

Thank you for your comment. Please see the DT's response to EEI's comments.

Jamison Cawley - Nebraska Public Power District - 1

Answer	No
Document Name	

Comment

Please provide more specificity around the clearing times referenced in R3.4. The phrase "more conservative estimates" is vague as it opens the door to different interpretations by various entities. A specific timeframe should be specified in cycles to clarify the intent of the Standard.

There are two issues to consider, both being identified during a compliance audit. One issue considers loss of communications at the primary substation, and the other considers any adjacent or proximate substations.

First, is the simulation intended to have a communication outage prior to a fault or simultaneous with the fault, and if not simultaneous how far in advance of the fault is the communications outage expected to occur (this issue was a point of contention during an audit)? Please clarify the language of the Standard regarding loss of communications for protection schemes and the timing of loss of communications between multiple substations.

Second, regarding timing of loss of communications at adjacent substations, if an assessment methodology allows for pilot schemes to trip high speed without communications such as DCB lack of blocking signal or DCUB unblocking schemes when the guard signal is lost during the trip window allowing a highspeed trip this is technically substantiated.

Additionally, the assumption of a simultaneous fault and/or loss of communications on each element of two adjacent substations, potentially up to ½ mile apart, seems impossible to technically justify and should not be required for the risk assessment.

Please reconcile the phrase “more likely to contribute” in Requirement 3.2 with the phrase in 3.4, “technically substantiated”. Using the terminology “more likely” seems to invalidate any conditions that are “technically substantiated”, allowing nothing less than the instantaneous complete destruction of multiple substations. This is impractical.

The NERC report on CIP-014 noted that NERC finds that the inconsistent approach to performing the risk assessment is largely due to a lack of specificity in the requirement language as to the nature and parameters of the risk assessment. Is it more likely all systems are inoperable or more likely just a few systems are inoperable? Several scenarios could exist which seems subjective and will still result in inconsistent approaches.

Please add examples of various scenarios to address these issues.

Likes 0	
Dislikes 0	

Response

Thank you for the comment. The draft standard allows Transmission Owners to use actual clearing times, which addresses the greater specificity requested in the comment. Clearing times are often specific to individual Transmission Owners so the DT believes it would be inappropriate to prescribe them in this standard.

Requirement R3.4 has been modified to address the comments in paragraphs 2 through 4

The DT has reduced the distance requirement in Requirement R2 which addresses this comment.

“More likely” has been removed from the draft standard.

The DT believes they have added adequate specificity to address the directives of the SAR.

Lidija Efremova - Lidija Efremova On Behalf of: Emma Halilovic, Hydro One Networks, Inc., 1; - Lidija Efremova

Answer	No
Document Name	

Comment

A 36month frequency of this standard has a shorter time cycle than some entities broader system studies which determine cascading, uncontrolled separations etc… in many regions the RC or ISOs perform these studies and provide results to the TO for use in CIP-014. These entities must also have to adjust their study cycle (which is very onerous) OR suggestion is to add a statement in the standard that allows the TO use their discretion with RC to use the most recent studies available.

Likes 0	

Dislikes 0	

Response
Thank you for the comment. The SAR requires the DT to align the different timelines and study cycles used in CIP-014-3. The 36 month frequency is longer than the 30 month frequency used in CIP-014-3.

Rachel Schuldt - Black Hills Corporation - 6, Group Name Black Hills Corporation - All Segments	
Answer	No
Document Name	

Comment
Black Hills Corporation agrees with EEI's suggestion to remove the word "proximity" from R3 to avoid using a term that is undefined in R2. Black Hills Corporation also agrees with EEI's comment that R3 Part 3.1.1 duplicates the concepts in R3 Part 3.1. Therefore, R3 Part 3.1.1 is not needed.

Likes 0	
Dislikes 0	

Response
Thank you for your comment. Please see the DT's response to EEI's comments.

John Pearson - ISO New England, Inc. - 2	
Answer	No
Document Name	

Comment
R3.3 should specify a three phase Fault to ensure consistency in performing studies. Also, see response to Question 2.

Likes 0	
Dislikes 0	

Response
Thank you for the comment. The DT believes that simulation of a fault is a reasonable assumption for possible events that could impact a single Transmission station or Transmission substation, and for events that could simultaneously impact multiple Transmission stations or Transmission substations. The DT does not believe that specification of fault type (e.g., 3-phase faults or single-line-to-ground faults) was mandated by the SAR, and furthermore believes that such a specification is a) too prescriptive and b) potentially creates scenarios that do not match up with plausible threat vectors assessed and managed by corporate security personnel complying with CIP-014 Requirements R7 – R10. The DT furthermore believes that simulation of a no-fault event is not a reasonable assumption for physical attacks under CIP-014. While plausible, no-fault events are not in keeping with the direction of the SAR.

Gail Elliott - Gail Elliott On Behalf of: Michael Moltane, International Transmission Company Holdings Corporation, 1; - Gail Elliott	
Answer	No
Document Name	

Comment

ITC proposes the following revisions for consideration:

The term “proximity” is not used in Requirement R2. ITC suggests removing it from Requirement R3 and its sub parts.

R3. Each Transmission Owner shall have a documented risk assessment methodology, including criteria for steady-state and dynamic simulations, for evaluating the loss due to a physical attack of each applicable Transmission station(s) and Transmission substation(s) documented in Requirement R1 and Transmission substation(s) or Transmission station(s) determined to be in proximity per Requirement R2. The methodology shall include, at a minimum, the following:

Requirement R3, Parts 3.1 and 3.1.1 include duplicative concepts that could lead to confusion implementing and/or documenting the requirement parts. As an example, Requirement R3 requires the Transmission Owner to have a documented risk assessment methodology, including criteria for steady-state and dynamic simulations. Requirement R3, Part 3.1 requires the methodology to include technically supported thresholds and rationale, and Part 3.1.1 restates the requirement for the technical rationale to include steady-state and dynamic system response to events. ITC suggests consolidating the requirement parts as written below:

{C}a. {C}Thresholds for determining the amount of acceptable load loss, the amount of acceptable generation loss, and post-event response recognized as resulting in instability, uncontrolled separation, or Cascading within an Interconnection. The technical rationale shall include:

{C} i. Steady-state and dynamic system response to events that could lead to load loss, generation loss, and other unacceptable post-event response

Requirement R3.2 ITC recommends that the phrase (that are more likely to contribute to) be deleted from the requirement. This is subjective and could lead to violations if your ERO disagreed with what you determined was not a more likely scenario as appropriate for your studies.

Requirement R3, Part 3.2.2 goes beyond the scope of what is documented in the SAR by requiring additional steady-state analysis after the steady-state and dynamic simulations show acceptable system response. The SAR specifically states that “[t]o ensure that a station is effectively identified as non-critical, registered entities need to have performed both steady-state and dynamic studies” but does not go into further detail about performing another steady-state analysis that includes any tripped Elements from the dynamic simulations. We recommend striking Requirement R3, Part 3.2.2.

Requirement R3, Part 3.3 could be further clarified and reference to proximity should be removed in favor the reference to R2, we suggest the following language:

3.3 For each applicable Transmission station or Transmission substation listed in accordance with Requirement R1, analysis shall include a Fault **in the simulation** at both the applicable Transmission station or Transmission substation and **at** each associated Transmission station or Transmission substation identified in accordance with Requirement R2 as being in proximity to the applicable Transmission station or Transmission substation.

Requirement R3, Part 3.4 is not clear as written. If the intention of the drafting team is for 3.4 to require fault simulations that assume the loss of communication and Protection System at all of the Transmission station(s) or Transmission substation(s) studied under Requirements R3, Parts 3.2 and 3.3 simultaneously, we suggest the following revision:

3.4. Fault simulations that assume the loss of communication and Protection System at **all of** the Transmission station(s) or Transmission substation(s) studied under Requirement R3, Parts 3.2 and 3.3. The TO shall identify the clearing times utilized for the required studies.

ITC recommends that both 3.4.1 and 3.4.2 are too prescriptive. An estimate of clearing times is typically used for dynamics studies to alleviate the administrative burden of identifying the expected clearing times for each specific scenario being analyzed.

ITC appreciates that drafting team’s revision to Requirement R3, Part 3.4.2 to provide flexibility in the clearing times used, however, by stating “Actual or more conservative” entities will still need to calculate the actual clearing times in order to validate that the estimates used were more conservative. We suggest the following if the DT believes this is essential:

3.4.2. Actual or more conservative estimates of clearing times shall be used.

Likes 0	
Dislikes 0	

Response

Thank you for your comment.

The use of “proximity” in requirement R3.3 is not intended to define a term but is used only in a descriptive sense.

Requirement R3.1.1 has been removed from the draft standard.

Requirement R3.2 has been modified and “more likely” has been removed.

Requirement R3.2.2 has been removed from the draft standard.

Modifications and clarifications have been made to Requirements R3.3 and R3.4. Please see draft standard.

The DT believes that “more” is a necessary clarifying term in Requirement R3.4.2. Please see the Technical Rationale for justification.

Alison Nickells - NiSource - Northern Indiana Public Service Co. - 1

Answer	No
Document Name	

Comment

NIPSCO agrees with EEI comments:

“The term “proximity” is not used in Requirement R2. EEI suggests removing it from Requirement R3 and its sub parts.

R3. Each Transmission Owner shall have a documented risk assessment methodology, including criteria for steady-state and dynamic simulations, for evaluating the loss due to a physical attack of each

applicable Transmission station(s) and Transmission substation(s) documented in Requirement R1 and Transmission substation(s) or Transmission station(s) determined per Requirement R2. The methodology shall include, at a minimum, the following:

Requirement R3, Parts 3.1 and 3.1.1 include duplicative concepts that could lead to confusion implementing and/or documenting the requirement parts. As an example, Requirement R3 requires the Transmission Owner to have a documented risk assessment methodology, including criteria for steady-state and dynamic simulations. Requirement R3, Part 3.1 requires the methodology to include technically supported thresholds and rationale, and Part 3.1.1 restates the requirement for the technical rationale to include steady-state and dynamic system response to events. EEI suggests consolidating the requirement parts as written below:

3.1 Technically supported thresholds and rationale for determining the amount of acceptable load loss, the amount of acceptable generation loss post-event response, and any additional considerations recognized as resulting in instability, uncontrolled separation, or Cascading within an Interconnection.

Requirement R3, Part 3.2.2 goes beyond the scope of what is documented in the SAR by requiring additional steady-state analysis after the steady-state and dynamic simulations show acceptable system response. The SAR specifically states that “[t]o ensure that a station is effectively identified as non-critical, registered entities need to have performed both steady-state and dynamic studies” but does not go into further detail about performing another steady-state analysis that includes any tripped Elements from the dynamic simulations. We suggest striking Requirement R3, Part 3.2.2.

Requirement R3, Part 3.3 could be further clarified and reference to proximity should be removed in favor the reference to R2, we suggest the following language:

*3.3 For each applicable Transmission station or Transmission substation listed in accordance with Requirement R1, analysis shall include a Fault **in the simulation** at the applicable Transmission station or Transmission substation and **then at** each Transmission station or Transmission substation identified in accordance with Requirement R2.*

Requirement R3, Part 3.4 is not clear as written. If the intention of the drafting team is for 3.4 to require fault simulations that assume the loss of communication and Protection System at all of the Transmission station(s) or Transmission substation(s) studied under Requirements R3, Parts 3.2 and 3.3 simultaneously, we suggest the following revision:

*3.4. Fault simulations that assume the loss of communication and Protection System at **all of** the Transmission station(s) or Transmission substation(s) studied under Requirement R3, Parts 3.2 and 3.3.*

EEI appreciates that drafting team's revision to Requirement R3, Part 3.4.2 to provide flexibility in the clearing times used, however, by stating "Actual or more conservative" entities will still need to calculate the actual clearing times in order to validate that the estimates are more conservative. We suggest:

3.4.2. Actual or conservative estimates of clearing times shall be used unless otherwise technically substantiated."

NIPSCO agrees with NV Energy comments:

The open-ended nature of "physical attack" results in very different interpretations of severity and subsequent protection system fault modeling results. This could be especially true depending on substation locations and inherent risk differences throughout the country. Clarify if the decisions to the questions above are left up to each company and their own assessment methodology?

Add examples to the rationale to address the various scenarios involving a substation under study and any adjacent substations meeting the ½ mile proximity. For example: Are they faulted simultaneously or individually with or without the same damage or inoperability? Are these questions up to each individual assessment methodology?

Likes 0	
Dislikes 0	

Response

Thank you for your comment. Please see the DT's response to EEI's comments.

The Drafting Team has added clarity to Requirement R3 that addresses the NV Energy comments.

Kelley Sargent - Puget Sound Energy, Inc. - 3

Answer	No
Document Name	

Comment

The standard needs to be prescriptive on amount of load loss/generation loss that may impact an Interconnection (i.e. result in instability, uncontrolled separation or Cascading within an Interconnection). Sometimes loss of large spot loads (data centers etc.) may not represent a general wide area outage in an interconnection; and number of customers or area distribution substations may provide better representation of a wide area outage/blackout.

Likes 0	
Dislikes 0	

Response
The intent of the standard is to capture those situations where the loss of load or generation could result in instability, uncontrolled separation, or Cascading within an Interconnection. These load and generation thresholds may vary between Interconnections and thus are difficult to prescribe.
Robert Blackney - Edison International - Southern California Edison Company - 1

Answer	No
Document Name	

Comment
See comments submitted by EEI.

Likes 0	
Dislikes 0	

Response
Thank you for your comment. Please see the DT's response to EEI's comments.
Selene Willis - Edison International - Southern California Edison Company - 5

Answer	No
Document Name	

Comment
See EEI Comments

Likes 0	
Dislikes 0	

Response
Thank you for your comment. Please see the DT's response to EEI's comments.
Israel Perez - Israel Perez On Behalf of: Laura Somak, Salt River Project, 3, 6, 5, 1; Mathew Weber, Salt River Project, 3, 6, 5, 1; Thomas Johnson, Salt River Project, 3, 6, 5, 1; Timothy Singh, Salt River Project, 3, 6, 5, 1; - Israel Perez

Answer	No
Document Name	

Comment
Salt River Project (SRP) agrees with EEI's suggestion to remove the word "proximity" from R3 to avoid using a term that is undefined in R2, and that R3 Part 3.1.1 duplicates the concepts in R3 Part 3.1.

Likes 0	
Dislikes 0	

Response
Thank you for your comment. Please see the DT's response to EEI's comments.

Stefanie Burke - Portland General Electric Co. - 6	
Answer	No
Document Name	
Comment	
PGE supports the comments of EEI.	
Likes 0	
Dislikes 0	
Response	
Thank you for your comment. Please see the DT's response to EEI's comments.	
Brian Millard - Tennessee Valley Authority - 1,3,5,6 - SERC, Group Name TVA RBB	
Answer	Yes
Document Name	
Comment	
The standard clearly defines the expectation of what events to perform for steady state and dynamic simulations.	
Likes 0	
Dislikes 0	
Response	
Thank you for your comments and support.	
Mark Garza - FirstEnergy - FirstEnergy Corporation - 4, Group Name FE Voter	
Answer	Yes
Document Name	
Comment	
FirstEnergy has no concerns with the proposed R3 for CIP-014-4.	
Likes 0	
Dislikes 0	
Response	
Thank you for your comments and support.	
Devin Shines - PPL - Louisville Gas and Electric Co. - 1,3,5,6 - SERC,RF	
Answer	Yes

Document Name	
Comment	
LG&E/KU supports the modifications in Requirement R3, but notes three non-substantive corrections. First, Requirement R3 Part 3.1.1 is redundant with Part 3.1 and could be removed. Second, “Protection System” in Requirement R3 Part 3.4 should be “Protection Systems”. Third, Requirement R3 Part 3.4 incorrectly states “… studied under Requirement R3, Parts 3.2 and 3.3.” It should only reference Part 3.3 since all Faults are now described in the same Part.	
Likes 0	
Dislikes 0	
Response	
Thank you for your comments and support. Requirement R3, Part 3.1.1 has been removed. “Protection System” has been corrected as suggested. Please see revised Standard on your third comment as the sub-Requirements have been reorganized.	
Carver Powers - Utility Services, Inc. - 4	
Answer	Yes
Document Name	
Comment	
Was the intent to have the responsible entity establish their own “acceptable load loss.” In other cases, it is up to the BA, RC, or RP to determine the Facility’s acceptable load loss.	
Likes 0	
Dislikes 0	
Response	
Thank you for your comments and support. The DT has drafted the language to require Transmission Owners to have criteria for acceptable load loss in their methodologies. It is a reasonable assumption that in many cases these criteria may be established by the Transmission Owners respected BA, RC, or RP. Whether determined by these or other entities, there should be technical justifications for the criteria.	
Daniel Gacek - Exelon - 1	
Answer	Yes
Document Name	
Comment	
Exelon agrees R3 addresses issues identified in the SAR, however, the term “Fault” is overly broad in the Draft 2 revision and does not provide the clarity directed by the SAR. Exelon prefers the Draft 1 version of R3 with the faults specified as at the highest voltage level, and with the fault magnitudes provided as specific fault types. The Draft 1 version of R3 provided criteria that created the “consistency of approach” the SAR is intended to achieve. Submitted on behalf of Exelon - Segments 1 & 3	
Likes 0	

Dislikes 0	

Response
Thank you for your comments and support. Due to the comments received from the industry from the previous ballot, the DT has removed the specificity regarding the type of Fault to apply.

Dwanique Spiller - Berkshire Hathaway - NV Energy - 5	
Answer	Yes
Document Name	

Comment
NV Energy appreciates moving most of the granular specifications of R3.1 to the Technical Rationale. NV Energy would prefer that these were also removed from the Technical Rationale due to concern that an auditor may solely rely upon the Technical Rationale in interpreting R3.1 That could lead to circumstances in which an entity is held to compliance with the Technical Rationale rather than the actual language the of requirement." Requirement R3.2 states "Steady-state and dynamic simulations shall be performed under System conditions that are **more likely** to contribute to instability, uncontrolled separation, or Cascading within an Interconnection". Please reconcile the statement in 3.2 how "more likely to contribute to instability, uncontrolled separation, or Cascading" clarifies "technically substantiated" in requirement 3.4. Using terminology such as "more likely" seems to remove the possibility to technically substantiate anything less than complete destruction of multiple substations. This seems impractical. The NERC report on CIP-014 noted that NERC finds that the inconsistent approach to performing the risk assessment is largely due to a lack of specificity in the requirement language as to the nature and parameters of the risk assessment. For example, is the protection system "rendered inoperable" where no substation protection system would operate or instead just damaged where the secondary protection is inoperable but the primary still operates for the substation? Is it more likely all systems are inoperable or more likely just a few systems are inoperable? A huge number of scenarios could exist which seems very subjective and will still result in inconsistent approaches. Clarify if the decisions to these questions are left up to each company and their own assessment methodology? Note: remove or damaged due to being redundant due to "rendered inoperable" If an assessment methodology allows for pilot schemes to trip high speed without communications such as DCB lack of blocking signal or DCUB unblocking schemes when the guard signal is lost during the trip window allowing a highspeed trip, is this technically substantiated? Add some discussion in the technical rationale regarding loss of communications for protection schemes.

Likes 0	
Dislikes 0	

Response
Thank you for your comments and support. The DT understands your concern with the auditor's approach. However, the SAR calls out that the risk assessment methods for studying and methods should account for dynamic studies. The DT believes that this language belongs to the Standard, not the Technical Rationale Document. The DT has removed "more likely" from the current draft, and there is no longer a discrepancy between Requirement R3, Part 3.2 and Part 3.4.

Clarification on “rendered inoperable or damaged” is given in Requirement R3, Part 3.4.

Robert Jones - Seattle City Light - 4

Answer	Yes
Document Name	

Comment

The new R3 is acceptable, but we have a couple remaining concerns:

I'm still not sure how to determine "technically supported thresholds" for gen and load loss, outside of what results in " instability, uncontrolled separation, or Cascading." Are these intended to be seperate determinations?

In reference to 3.4 specifically, I appreciate the requirement being less prescriptive about how we run the study, but we have experienced disagreement with regulators about what type of physical attack we are supposed to simulating (i.e. "smoking crater" vs something more realistic). It would be nice to have some guidance here to help clear up the ambiguity so that we can choose the appropriate contingencies to run.

Likes 0	
Dislikes 0	

Response

Thank you for your comments and support.

The DT has removed the phrase "technically supported thresholds", however, it is prudent for each Transmission Owner to work with its respective Regional Entities to establish thresholds that, if exceeded, would be expected to cause instability, uncontrolled separation, or Cascading within an interconnection.

Regarding the type of physical attack, the DT believes that this issue is adequately addressed in the modeling requirements in Requirement R3.

Jennifer Mcnally - Duke Energy - 1,3,5,6 - Texas RE,SERC,RF

Answer	Yes
Document Name	

Comment

Duke Energy supports the revisions to R3 from Draft 1. For additional clarity, we suggest the following language for R3.3 “For each applicable Transmission station or Transmission substation listed in accordance with Requirement R1, analysis shall include a Fault **in the simulation** at the applicable Transmission station or Transmission substation and **then at** each Transmission station or Transmission substation identified in accordance with Requirement R2 as being in proximity to the applicable Transmission station or Transmission substation.

Likes 0	
Dislikes 0	

Response

Thank you for your comments and support. Please see revised language in the latest Requirement R3, Part 3.3, which has now adequately addresses this issue.

Ellese Murphy - Ellese Murphy On Behalf of: Katherine Street, Duke Energy , 5, 6, 1, 1; - Ellese Murphy

Answer	Yes

Document Name	
Comment	
Duke Energy supports the revisions to R3 from Draft 1. For additional clarity, we suggest the following language for R3.3 “For each applicable Transmission station or Transmission substation listed in accordance with Requirement R1, analysis shall include a Fault **in the simulation** at the applicable Transmission station or Transmission substation and **then at** each Transmission station or Transmission substation identified in accordance with Requirement R2 as being in proximity to the applicable Transmission station or Transmission substation.	
Likes 0	
Dislikes 0	
Response	
Thank you for your comments and support. The drafting team has modified Requirement R3, Part 3.3 to include “specification for Fault simulations” and “for each applicable Transmission station or Transmission substation”.	
Matthew Nicklin - Southern Illinois Power Cooperative - 1,3,5 - SERC	
Answer	Yes
Document Name	
Comment	
Likes 0	
Dislikes 0	
Response	
Thank you for your support.	
Donna Wood - Tri-State G and T Association, Inc. - 1	
Answer	Yes
Document Name	
Comment	
Likes 0	
Dislikes 0	
Response	
Thank you for your support.	
Sean Steffensen - IDACORP - Idaho Power Company - 1	
Answer	Yes
Document Name	
Comment	

Likes 0	
Dislikes 0	
Response	
Thank you for your support.	
Richard Jackson - U.S. Bureau of Reclamation - 1	
Answer	Yes
Document Name	
Comment	
Likes 0	
Dislikes 0	
Response	
Thank you for your support.	
Tim Kelley - Tim Kelley On Behalf of: Charles Norton, Sacramento Municipal Utility District, 3, 6, 4, 1, 5; Foung Mua, Sacramento Municipal Utility District, 3, 6, 4, 1, 5; Kevin Smith, Balancing Authority of Northern California, 1; Nicole Looney, Sacramento Municipal Utility District, 3, 6, 4, 1, 5; Ryder Couch, Sacramento Municipal Utility District, 3, 6, 4, 1, 5; Wei Shao, Sacramento Municipal Utility District, 3, 6, 4, 1, 5; - Tim Kelley, Group Name SMUD and BANC	
Answer	Yes
Document Name	
Comment	
Likes 0	
Dislikes 0	
Response	
Thank you for your support.	
Teresa Krabe - Lower Colorado River Authority - 5	
Answer	Yes
Document Name	
Comment	
Likes 0	
Dislikes 0	

Response	
Thank you for your support.	
James Baldwin - James Baldwin On Behalf of: Matt Lewis, Lower Colorado River Authority, 5, 1; - James Baldwin	
Answer	Yes
Document Name	
Comment	
Likes 0	
Dislikes 0	
Response	
Thank you for your support.	
Nick Leathers - Nick Leathers On Behalf of: David Jendras Sr, Ameren - Ameren Services, 3, 6, 1; - Nick Leathers	
Answer	Yes
Document Name	
Comment	
Likes 0	
Dislikes 0	
Response	
Thank you for your support.	
Scott Langston - Tallahassee Electric (City of Tallahassee, FL) - 1	
Answer	Yes
Document Name	
Comment	
Likes 0	
Dislikes 0	
Response	
Thank you for your support.	
Jodirah Green - ACES Power Marketing - 1,3,4,5,6 - MRO,WECC,Texas RE,SERC,RF, Group Name ACES Collaborators	
Answer	Yes
Document Name	

Comment	
Likes 0	
Dislikes 0	
Response	
Thank you for your support.	
Bob Cardle - Bob Cardle On Behalf of: Marco Rios, Pacific Gas and Electric Company, 3, 1, 5; Sandra Ellis, Pacific Gas and Electric Company, 3, 1, 5; Tyler Brun, Pacific Gas and Electric Company, 3, 1, 5; - Bob Cardle	
Answer	Yes
Document Name	
Comment	
Likes 0	
Dislikes 0	
Response	
Thank you for your support.	
Amy Wilke - American Transmission Company, LLC - 1	
Answer	Yes
Document Name	
Comment	
Likes 0	
Dislikes 0	
Response	
Thank you for your support.	
Rachel Coyne - Texas Reliability Entity, Inc. - 10	
Answer	
Document Name	
Comment	
Texas RE is concerned the proposed Requirement Part 3.3 language does not specify the type of fault conditions (line-to-ground fault or three-phase fault) criteria that needs to be studied. Texas RE is also concerned with the use of the NERC Glossary definition of Fault, as it does not include line-to-ground faults or three-phase faults. Not defining the type of fault leaves it open for inconsistent applicability by the Transmission Owners. The drafting team should consider specifying the fault type to be used in the simulations to capture the highest risk conditions. At minimum, 'Fault' should not be	

capitalized, but a clear definition of the required “fault” conditions to be studied should be developed in the standard itself to avoid inconsistency in the compliance and subsequent auditing process.	
Likes 0	
Dislikes 0	
Response	
Thank you for your comments. The drafting team intends to include any event occurring on an electric system. No specific fault type needs to be called out.	

4. Do you agree with the modifications made in CIP-014-4 with new Requirement R4 to address the issues identified in the SAR?

Israel Perez - Israel Perez On Behalf of: Laura Somak, Salt River Project, 3, 6, 5, 1; Mathew Weber, Salt River Project, 3, 6, 5, 1; Thomas Johnson, Salt River Project, 3, 6, 5, 1; Timothy Singh, Salt River Project, 3, 6, 5, 1; - Israel Perez

Answer	No
Document Name	

Comment

Salt River Project (SRP) supports Duke Energy's comment to clarify “owned by multiple Transmission Owners” and clarification on having elements at a station or substation with differing ownership and whether that would make or not make a station or substation jointly owned.

Likes 0	
Dislikes 0	

Response

Thank you for the comments. Please see responses to Duke Energy’s comment. The drafting team has edited R4 for the third draft to provide additional clarification on the jointly owned issue, which was listed as part of the project work scope of the SAR.

Ellese Murphy - Ellese Murphy On Behalf of: Katherine Street, Duke Energy , 5, 6, 1, 1; - Ellese Murphy

Answer	No
Document Name	

Comment

Duke Energy requests additional clarification on “owned by multiple Transmission Owners” and requests that the team clarify that merely having elements at a station or substation with differing ownership would not make a station or substation jointly owned. If the Drafting team does intend thatelements from another Transmission Owner could classify a station or substation as “owned by multiple Transmission Owners”, what is the mechanism to ensure coordination occurs? Particularly if the visiting Transmission Owner does not have compliance in scope for CIP-014.

Likes 0	
Dislikes 0	

Response

Thank you for the comments. The drafting team edited R4 for the third draft to provide additional clarification on the jointly owned issue, which was listed as part of the project work scope of the SAR. Regarding the ensuring of coordination, the DT asserts that NERC Reliability Standards are not generally designed to guarantee this. For example, PRC-006-5 Requirement R5 requires coordination between multiple Planning Coordinators, with no mechanism in place to ensure such coordination will occur.

Gail Elliott - Gail Elliott On Behalf of: Michael Moltane, International Transmission Company Holdings Corporation, 1; - Gail Elliott

Answer	No
Document Name	

Comment

The inclusion of R4 is not identified as needed in the NERC CIP-014 Report nor in the SAR for the project. The inclusion of this requirement leads to a number of questions that have not been clarified. If For an entity that has a station with multiple voltage areas including some that are not applicable to CIP-014, how would an entity determine if this would be considered a joint station. If the second TO only has facilities that would not be applicable to CIP-014 within the substation, would they have to identify joint responsibilities for these sites.

If this requirement is retained, ITC believes it would be prudent to only consider the CIP-014 applicable voltages in the station to determine if it would be a joint station.

Likes 0	
Dislikes 0	

Response

Thank you for the comments. The drafting team edited R4 for the third draft to provide additional clarification on the "jointly owned" and "applicability" issues, which was listed as part of the project work scope of the SAR.

Jennifer Mcnally - Duke Energy - 1,3,5,6 - Texas RE,SERC,RF

Answer	No
Document Name	

Comment

Duke Energy requests additional clarification on "owned by multiple Transmission Owners" and requests that the team clarify that merely having elements at a station or substation with differing ownership would not make a station or substation jointly owned. If the Drafting team does intend that elements from another Transmission Owner could classify a station or substation as "owned by multiple Transmission Owners", what is the mechanism to ensure coordination occurs? Particularly if the visiting Transmission Owner does not have compliance in scope for CIP-014.

Likes 0	
Dislikes 0	

Response

Thank you for the comments. The drafting team edited R4 for the third draft to provide additional clarification on the jointly owned issue, which was listed as part of the project work scope of the SAR. Regarding the ensuring of coordination, the DT asserts that NERC Reliability Standards are not generally designed to guarantee this. For example, PRC-006-5 Requirement R5 requires coordination between multiple Planning Coordinators, which involves effort on all involved registered entities to jointly discuss and develop the UFLS program design. Evaluating whether this coordination took place as specified by Requirement R5 would be accomplished by NERC and the Regional Entities through the Compliance Monitoring and Enforcement processes (e.g. Compliance Audit, Spot Check, Self-Report, etc.).

John Pearson - ISO New England, Inc. - 2

Answer	No
Document Name	

Comment

R4 should reference both R1 and R2. The modifed language is shown below:

Each Transmission Owner with applicable Transmission station(s) and Transmission substation(s) per Requirement R1 and R2 owned by multiple Transmission Owners shall coordinate with those Transmission Owners to determine and document their individual and joint responsibilities for performing any required risk assessments per Requirement R5. *[VRF: Medium; Time-Horizon: Operations Planning, Long-term Planning]*

Likes 0	
Dislikes 0	

Response

Thank you for the comments. The DT believes that existing R1 reference is sufficient, as it keeps R4 properly focused solely on Transmission Owners with applicability to CIP-014.

Lidija Efremova - Lidija Efremova On Behalf of: Emma Halilovic, Hydro One Networks, Inc., 1; - Lidija Efremova

Answer	No
Document Name	

Comment

This section refers to Transmission owners coordinating with other transmission owners. Further clarification is needed to address how TO should coordinate activities with a GO which are both in 'proximity' to each other. Which standards does a GO need to follow and how can this be enforced by a TO.

Likes 0	
Dislikes 0	

Response

Thank you for the comments. R4 applies solely to Transmission Owners. Proximity of Transmission Owners to Generator Owners thus has no CIP-014 applicability and furthermore is outside the scope of the SAR.

Jamison Cawley - Nebraska Public Power District - 1

Answer	No
Document Name	

Comment

Please provide additional details on the expected outcome of joint risk assessments. Is agreement of the results of the risk assessments between the entities required?

Likes 0	
Dislikes 0	

Response

Thank you for the comments. Regarding agreement of the results, the drafting team responds similarly to comments on a guarantee of coordination. No guarantee that coordination will occur without difficulty or that results will agree is possible. To the extent that agreement can be achieved, this is of course desirable. In the event that it cannot, each Transmission Owner should be able to technically justify its results using its own evidence.

Dave Krueger - SERC Reliability Corporation - 10

Answer	No
Document Name	

Comment

SERC appreciates the ongoing efforts to refine the CIP-014 Risk Assessment portion of the standard. SERC believes the coordination efforts in R4 should include R3 as well as R5, so that consistency and clarity in study results between multiple entity owners is maintained. In the case where all owners share the same R3 and R4 thresholds (such as in an RTO/ISO), only an acknowledgement of such would be needed to affirm consistency.

Likes 0	
Dislikes 0	

Response

Thank you for the comments. Requirement R4 has been modified accordingly.

Lucinda Bradshaw - Lucinda Bradshaw On Behalf of: Byron Booker, Oncor Electric Delivery, 1; - Lucinda Bradshaw

Answer	No
Document Name	

Comment

As written, the revised R4 appears to indicate that each TO that owns a part of a Transmission station or a Transmission substation identified pursuant to the assessment required in R1 should coordinate with those other TOs to determine their “individual and joint responsibilities” for performing any required risk assessments. It appears that the subject TOs could agree that each TO can prepare its own risk assessment of the subject station. If that is not what the SDT intended, then R4 needs to be clarified to affirmatively state more clearly what is intended.

It also appears that R4 does not require that each of the TOs that owns a part of a Transmission station or a Transmission substation must use the same methodology in preparing its required risk assessment. Again, if that is not what the SDT intended, then R4 needs to be clarified to make any methodological requirements clear.

Fundamentally, there are two inherent assumptions in the revised R4: (1) that it will always be possible for a TO to coordinate with all other TOs owning a Transmission station or a Transmission substation; and (2) that those TOs will always be able to agree on the responsibilities for preparing any required risk assessments. Unfortunately, that will likely not always be the case. To address this possibility, R4 should be revised to allow a TO to perform its own required risk assessment if the TOs cannot agree on the responsibilities for performing the required risk assessments.

Likes 0	
Dislikes 0	

Response

Thank you for the comments. The DT affirms that each TO can prepare its own risk assessment of the subject station, and that each may have its own methodology. Regarding difficulties in agreement/coordination between TOs, see earlier responses to Duke Energy and Nebraska Public Power District comments. To the extent that agreement can be achieved, this is of course desirable. In the event that it cannot, each Transmission Owner must be able to technically justify its results using its own evidence. In the extremely unlikely scenario that coordination is attempted but fails to occur, evidence of the attempt at coordination will suffice as evidence of coordination.

Chantal Mazza - Chantal Mazza On Behalf of: Junji Yamaguchi, Hydro-Quebec (HQ), 1, 5; Nicolas Turcotte, Hydro-Quebec (HQ), 1, 5; - Chantal Mazza

Answer	No
Document Name	

Comment

Is the 36-month periodicity with regard to the coordination, the risk assessment, or both? We suggest adding that only changes in responsibilities of Joint substation or stations should be documented once every 36 months or attestation that no changes occurred in responsibilities during the 36-month period. At scale, these substation and stations can be an administrative burden due to the number of agreements an entity may have, and an overarching document may be a better solution for management of these agreements. We are unsure of the intended goal or end value of the requirement and would like clarification

Does the outcome of the risk assessment need to be agreed to by both parties of a Joint substation or station? Additional clarification on what is expected for the outcome of the coordinated risk assessment should be clarified.

Likes 0	
Dislikes 0	

Response

Thank you for the comments. Coordination must take place such that a risk assessment is completed at least once every 36 calendar months. Regarding coordination and agreement, see previous responses to Duke Energy and Nebraska Public Power District comments.

Stephen Stafford - Stephen Stafford On Behalf of: Greg Davis, Georgia Transmission Corporation, 1; - Stephen Stafford

Answer	No
Document Name	

Comment

The requirement is appropriate in the context that the referenced risk assessment is from a physical security perspective and not a transmission planning analysis perspective. Should the intent of this comment be applicable to physical security and not a transmission planning analysis, then our answer would be yes.

Likes 0	
Dislikes 0	

Response

Thank you for the comments. The SAR supports coordination between multiple Transmission Owners of a station or substation, and specifically in the performance of transmission planning analyses. While CIP-014 is officially a physical security standard, of a practical nature it is a planning standard, as evidenced by the fact that the Time Horizon stated for all Requirements is Near-Term Planning.

Ruida Shu - Northeast Power Coordinating Council - 1,2,3,4,5,6,7,8,9,10 - NPCC, Group Name NPCC RSC

Answer	No
Document Name	

Comment

Is the 36-month periodicity with regard to the coordination, the risk assessment, or both? We suggest adding that only changes in responsibilities of Joint substation or stations should be documented once every 36 months or attestation that no changes occurred in responsibilities during the 36-month period. At scale, these substation and stations can be an administrative burden due to the number of agreements an entity may have, and an overarching document may be a better solution for management of these agreements. We are unsure of the intended goal or end value of the requirement and would like clarification

Does the outcome of the risk assessment need to be agreed to by both parties of a Joint substation or station? Additional clarification on what is expected for the outcome of the coordinated risk assessment should be clarified.	
Likes 0	
Dislikes 0	
Response	
Thank you for the comments. Coordination must take place such that a risk assessment is completed at least once every 36 calendar months. Regarding coordination and agreement, see previous responses to Duke Energy and Nebraska Public Power District comments.	
Gary Trezza - Long Island Power Authority - 1 - NPCC	
Answer	No
Document Name	
Comment	
It is recommended to add R2 (in addition to R1) to the language of R4 so as to clarify that coordination for “Transmission station(s) and Transmission substation(s), irrespective of ownership, within ½ mile of an applicable Transmission station or Transmission substation documented in Requirement R1” may be required - for situations where stations identified under R2 have different ownership.	
Likes 0	
Dislikes 0	
Response	
Thank you for the comments. The DT believes that existing R1 reference is sufficient, as it keeps R4 properly focused solely on Transmission Owners with applicability to CIP-014.	
Nikki Carson-Marquis - Nikki Carson-Marquis On Behalf of: Theresa Allard, Minnkota Power Cooperative Inc., 1; - Nikki Carson-Marquis	
Answer	No
Document Name	
Comment	
MPC strongly disagrees with the use of a 36-month timeframe for utilities who have not previously identified stations or substations as critical for the same reasons specified in our comments for Question 5.	
Likes 0	
Dislikes 0	
Response	
Thank you for the comments. The DT was directed in the SAR to “correct any discrepancies between the study period, frequency of study, and the base case(s) a Transmission Owner uses.” The DT clarified and simplified the timeframes, while recognizing the challenges in correcting these discrepancies (24-months-out modeling, 30 and 60 months study frequency) to all entities’ satisfaction.	
Ronald Hoover - Bonneville Power Administration - 1,3,5,6 - WECC	
Answer	No

Document Name	
Comment	
BPA finds the current wording of R4 does not address the inclusions in R2 sub-requirements 2.1 and 2.2.	
Likes 0	
Dislikes 0	
Response	
Thank you for the comments. The Requirement R4 is associated with Requirements R1, R3, and R5, not Requirement R2. Furthermore, sub-Requirements Parts 2.1 & 2.2 have been removed from this version.	
Jeffrey Streifling - NB Power Corporation - 1	
Answer	No
Document Name	
Comment	
Is the 36-month periodicity with regard to the coordination, the risk assessment, or both? We suggest adding that only changes in responsibilities of Joint substation or stations should be documented once every 36 months or attestation that no changes occurred in responsibilities during the 36-month period. At scale, these substation and stations can be an administrative burden due to the number of agreements an entity may have, and an overarching document may be a better solution for management of these agreements. We are unsure of the intended goal or end value of the requirement and would like clarification Does the outcome of the risk assessment need to be agreed to by both parties of a Joint substation or station? Additional clarification on what is expected for the outcome of the coordinated risk assessment should be clarified.	
Likes 0	
Dislikes 0	
Response	
Thank you for the comments. Coordination must take place such that a risk assessment is completed at least once every 36 calendar months. Regarding coordination and agreement, see previous responses to Duke Energy and Nebraska Public Power District comments.	
Erin Wilson - NB Power Corporation - New Brunswick Power Transmission Corporation - 5	
Answer	No
Document Name	
Comment	
Is the 36-month periodicity with regard to the coordination, the risk assessment, or both? We suggest adding that only changes in responsibilities of Joint substation or stations should be documented once every 36 months or attestation that no changes occurred in responsibilities during the 36-month period. At scale, these substation and stations can be an administrative burden due to the number of agreements an entity may have, and an overarching document may be a better solution for management of these agreements. We are unsure of the intended goal or end value of the requirement and would like clarification	

Does the outcome of the risk assessment need to be agreed to by both parties of a Joint substation or station? Additional clarification on what is expected for the outcome of the coordinated risk assessment should be clarified.	
Likes 0	
Dislikes 0	
Response	
Thank you for the comments. Coordination must take place such that a risk assessment is completed at least once every 36 calendar months. Regarding coordination and agreement, see previous responses to Duke Energy and Nebraska Public Power District comments.	
Kevin Conway - Western Power Pool - 4	
Answer	No
Document Name	
Comment	
Transmission Owners who are identified in R1 do not have to be coordinate if they do not have facilities as identified in Attachment 1. The reference to R5 should be deleted and language such as "...their individual and joint responsibilities for performing any required risk assessments per this standard." Has the drafting team considered where two substations are in close proximity together and where a single event can affect both substations: however, one is owned by an applicable entity under R1, and the other is not?	
Likes 0	
Dislikes 0	
Response	
Thank you for the comments. Since R5 is the primary Requirement for risk assessment performance, linking it to R4 is appropriate. Regarding the proximity comment, see responses to comments in the Q2/R2 section.	
Selene Willis - Edison International - Southern California Edison Company - 5	
Answer	Yes
Document Name	
Comment	
See EEI Comments	
Likes 0	
Dislikes 0	
Response	
Thank you for the comments.	
Robert Blackney - Edison International - Southern California Edison Company - 1	
Answer	Yes
Document Name	

Comment	
See comments submitted by EEI.	
Likes 0	
Dislikes 0	
Response	
Thank you for the comments.	
TRACEY JOHNSON - Southern Indiana Gas and Electric Co. - 3,5,6 - RF	
Answer	Yes
Document Name	
Comment	
Southern Indiana Gas and Electric Company d/b/a CenterPoint Energy Indiana South (SIGE) supports the comments as submitted by Edison Electric Institute (EEI).	
Likes 0	
Dislikes 0	
Response	
Thank you for the comments. Please see responses to the EEI's comments.	
Dwanique Spiller - Berkshire Hathaway - NV Energy - 5	
Answer	Yes
Document Name	
Comment	
NV Energy appreciates the removal of a periodicity requirement.	
Likes 0	
Dislikes 0	
Response	
Thank you for the comments and support.	
Kristine Martz - Edison Electric Institute - NA - Not Applicable - NA - Not Applicable	
Answer	Yes
Document Name	
Comment	

EEI agrees with the modifications made to CIP-014-04 Requirement R4.	
Likes 0	
Dislikes 0	
Response	
Thank you for the comments and support.	
Clay Walker - Clay Walker On Behalf of: Robert Hirchak, Cleco Corporation, 6, 5, 1, 3; - Clay Walker	
Answer	Yes
Document Name	
Comment	
Cleco agrees with EEI comments.	
Likes 0	
Dislikes 0	
Response	
Thank you for the comments and support. Please see the responses provided to EEI's comments.	
Matt Carden - Southern Company - Southern Company Services, Inc. - 1	
Answer	Yes
Document Name	
Comment	
Southern Company agrees with the modifications.	
Likes 0	
Dislikes 0	
Response	
Thank you for your support.	
Mark Garza - FirstEnergy - FirstEnergy Corporation - 4, Group Name FE Voter	
Answer	Yes
Document Name	
Comment	
FirstEnergy has no concerns with the proposed R4 for CIP-014-4.	

Likes 0	
Dislikes 0	
Response	
Thank you for your support.	
Leshel Hutchings - AEP - 3	
Answer	Yes
Document Name	
Comment	
None	
Likes 0	
Dislikes 0	
Response	
Thank you for your support.	
Stefanie Burke - Portland General Electric Co. - 6	
Answer	Yes
Document Name	
Comment	
Likes 0	
Dislikes 0	
Response	
Thank you for your support.	
Amy Wilke - American Transmission Company, LLC - 1	
Answer	Yes
Document Name	
Comment	
Likes 0	
Dislikes 0	
Response	

Thank you for your support.	
Bob Cardle - Bob Cardle On Behalf of: Marco Rios, Pacific Gas and Electric Company, 3, 1, 5; Sandra Ellis, Pacific Gas and Electric Company, 3, 1, 5; Tyler Brun, Pacific Gas and Electric Company, 3, 1, 5; - Bob Cardle	
Answer	Yes
Document Name	
Comment	
Likes 0	
Dislikes 0	
Response	
Thank you for your support.	
Kelley Sargent - Puget Sound Energy, Inc. - 3	
Answer	Yes
Document Name	
Comment	
Likes 0	
Dislikes 0	
Response	
Thank you for your support.	
Alison Nickells - NiSource - Northern Indiana Public Service Co. - 1	
Answer	Yes
Document Name	
Comment	
Likes 0	
Dislikes 0	
Response	
Thank you for your support.	
Jodirah Green - ACES Power Marketing - 1,3,4,5,6 - MRO,WECC,Texas RE,SERC,RF, Group Name ACES Collaborators	
Answer	Yes
Document Name	

Comment	
Likes 0	
Dislikes 0	
Response	
Thank you for your support.	
Scott Langston - Tallahassee Electric (City of Tallahassee, FL) - 1	
Answer	Yes
Document Name	
Comment	
Likes 0	
Dislikes 0	
Response	
Thank you for your support.	
Rachel Schuldt - Black Hills Corporation - 6, Group Name Black Hills Corporation - All Segments	
Answer	Yes
Document Name	
Comment	
Likes 0	
Dislikes 0	
Response	
Thank you for your support.	
Nick Leathers - Nick Leathers On Behalf of: David Jendras Sr, Ameren - Ameren Services, 3, 6, 1; - Nick Leathers	
Answer	Yes
Document Name	
Comment	
Likes 0	
Dislikes 0	
Response	

Thank you for your support.	
James Baldwin - James Baldwin On Behalf of: Matt Lewis, Lower Colorado River Authority, 5, 1; - James Baldwin	
Answer	Yes
Document Name	
Comment	
Likes 0	
Dislikes 0	
Response	
Thank you for your support.	
Teresa Krabe - Lower Colorado River Authority - 5	
Answer	Yes
Document Name	
Comment	
Likes 0	
Dislikes 0	
Response	
Thank you for your support.	
Richard Vendetti - NextEra Energy - 5	
Answer	Yes
Document Name	
Comment	
Likes 0	
Dislikes 0	
Response	
Thank you for your support.	
Alan Kloster - Alan Kloster On Behalf of: Jeremy Harris, Evergy, 3, 5, 1, 6; Kevin Frick, Evergy, 3, 5, 1, 6; Marcus Moor, Evergy, 3, 5, 1, 6; Tiffany Lake, Evergy, 3, 5, 1, 6; - Alan Kloster	
Answer	Yes
Document Name	

Comment	
Likes 0	
Dislikes 0	
Response	
Thank you for your support.	
Jennie Wike - Jennie Wike On Behalf of: John Merrell, Tacoma Public Utilities (Tacoma, WA), 1, 4, 5, 6, 3; - Jennie Wike, Group Name Tacoma Power	
Answer	Yes
Document Name	
Comment	
Likes 0	
Dislikes 0	
Response	
Thank you for your support.	
Robert Jones - Seattle City Light - 4	
Answer	Yes
Document Name	
Comment	
Likes 0	
Dislikes 0	
Response	
Thank you for your support.	
Daniel Gacek - Exelon - 1	
Answer	Yes
Document Name	
Comment	
Likes 0	
Dislikes 0	

Response	
Thank you for your support.	
Andrew Smith - APS - Arizona Public Service Co. - 5	
Answer	Yes
Document Name	
Comment	
Likes 0	
Dislikes 0	
Response	
Thank you for your support.	
Diana Aguas - CenterPoint Energy Houston Electric, LLC - 1 - Texas RE	
Answer	Yes
Document Name	
Comment	
Likes 0	
Dislikes 0	
Response	
Thank you for your support.	
Tim Kelley - Tim Kelley On Behalf of: Charles Norton, Sacramento Municipal Utility District, 3, 6, 4, 1, 5; Foung Mua, Sacramento Municipal Utility District, 3, 6, 4, 1, 5; Kevin Smith, Balancing Authority of Northern California, 1; Nicole Looney, Sacramento Municipal Utility District, 3, 6, 4, 1, 5; Ryder Couch, Sacramento Municipal Utility District, 3, 6, 4, 1, 5; Wei Shao, Sacramento Municipal Utility District, 3, 6, 4, 1, 5; - Tim Kelley, Group Name SMUD and BANC	
Answer	Yes
Document Name	
Comment	
Likes 0	
Dislikes 0	
Response	
Thank you for your support.	
Carver Powers - Utility Services, Inc. - 4	

Answer	Yes
Document Name	
Comment	
Likes 0	
Dislikes 0	
Response	
Thank you for your support.	
Jessica Cordero - Unisource - Tucson Electric Power Co. - 1	
Answer	Yes
Document Name	
Comment	
Likes 0	
Dislikes 0	
Response	
Thank you for your support.	
Amy Wesselkamper - PNM Resources - Public Service Company of New Mexico - 3	
Answer	Yes
Document Name	
Comment	
Likes 0	
Dislikes 0	
Response	
Thank you for your support.	
Richard Jackson - U.S. Bureau of Reclamation - 1	
Answer	Yes
Document Name	
Comment	
Likes 0	

Dislikes 0	
Response	
Thank you for your support.	
Sean Steffensen - IDACORP - Idaho Power Company - 1	
Answer	Yes
Document Name	
Comment	
Likes 0	
Dislikes 0	
Response	
Thank you for your support.	
Devin Shines - PPL - Louisville Gas and Electric Co. - 1,3,5,6 - SERC,RF	
Answer	Yes
Document Name	
Comment	
Likes 0	
Dislikes 0	
Response	
Thank you for your support.	
Donna Wood - Tri-State G and T Association, Inc. - 1	
Answer	Yes
Document Name	
Comment	
Likes 0	
Dislikes 0	
Response	
Thank you for your support.	
Rebika Yitna - Rebika Yitna On Behalf of: Roger Brand, MEAG Power, 3, 1; - Rebika Yitna	
Answer	Yes

Document Name	
Comment	
Likes 0	
Dislikes 0	
Response	
Thank you for your support.	
Rachel Coyne - Texas Reliability Entity, Inc. - 10	
Answer	Yes
Document Name	
Comment	
Likes 0	
Dislikes 0	
Response	
Thank you for your support.	
Ben Hammer - Western Area Power Administration - 1	
Answer	Yes
Document Name	
Comment	
Likes 0	
Dislikes 0	
Response	
Thank you for your support.	
Joshua London - Eversource Energy - 1, Group Name Eversource	
Answer	Yes
Document Name	
Comment	
Likes 0	
Dislikes 0	

Response	
Thank you for your support.	
James Keele - Entergy - 3	
Answer	Yes
Document Name	
Comment	
Likes 0	
Dislikes 0	
Response	
Thank you for your support.	
Matthew Nicklin - Southern Illinois Power Cooperative - 1,3,5 - SERC	
Answer	Yes
Document Name	
Comment	
Likes 0	
Dislikes 0	
Response	
Thank you for your support.	
Tamarra Hardie - Tamarra Hardie On Behalf of: Diane E Landry, Public Utility District No. 1 of Chelan County, 3, 5, 1, 6; - Public Utility District No. 1 of Chelan County - 6, Group Name CHPD	
Answer	Yes
Document Name	
Comment	
Likes 0	
Dislikes 0	
Response	
Thank you for your support.	
Mark Flanary - Midwest Reliability Organization - 10	
Answer	Yes

Document Name	
Comment	
Likes 0	
Dislikes 0	
Response	
Thank you for your support.	
Brian Millard - Tennessee Valley Authority - 1,3,5,6 - SERC, Group Name TVA RBB	
Answer	Yes
Document Name	
Comment	
Likes 0	
Dislikes 0	
Response	
Thank you for your support.	

5. Do you agree with the modifications made in CIP-014-4 with adding Requirement R5 to address the issues identified in the SAR?

Kevin Conway - Western Power Pool - 4

Answer	No
Document Name	

Comment

This goes back to R1 where ALL TOPs should be required to meet R1 (every 36 months), and only those who have Facilities that meet Attachment 1 will be responsible for meeting compliance to the rest of the Standard.

As written, entities may find they are exempt from the proposed standard initially, and there is no requirement for them to re-evaluate their applicability.

Likes 0	
Dislikes 0	

Response

Thank you for the comment. Please see the DT's Q1 response.

Erin Wilson - NB Power Corporation - New Brunswick Power Transmission Corporation - 5

Answer	No
Document Name	

Comment

We suggest adding language about required actions where a TO designate another entity's Control Center in part 5.2. for instance, coordination between the entities and information security.

Likes 0	
Dislikes 0	

Response

Thank you for your comment. This has been addressed in Requirement R7.

Jeffrey Streifling - NB Power Corporation - 1

Answer	No
Document Name	

Comment

We suggest adding language about required actions where a TO designate another entity's Control Center in part 5.2. for instance, coordination between the entities and information security.

Likes 0	

Dislikes 0	

Response

Thank you for your comment. This has been addressed in Requirement R7.

Tamarra Hardie - Tamarra Hardie On Behalf of: Diane E Landry, Public Utility District No. 1 of Chelan County, 3, 5, 1, 6; - Public Utility District No. 1 of Chelan County - 6, Group Name CHPD

Answer	No
Document Name	

Comment

It is recommended to also update the R5 VRF to reference the Near-Term Transmission Planning Horizon instead of the Long-Term Transmission Planning Horizon. The R5 VRF Time Horizon still states it applies to 'Long-term Planning Horizon', whereas the NERC Glossary of Terms defines the 'Near-Term Planning Horizon' as the window covering year 1 through 5. This requirement references 'at least once every 36 calendar months', so it is recommended that the R5 VRF Time Horizon language is updated to reference the 'Near-Term Transmission Planning Horizon'. Otherwise, the changes are generally good.

Likes 0	
Dislikes 0	

Response

Thank you for your comments. NERC Glossary of Terms is different from NERC Time Horizons. NERC Time Horizons define "Long-term Planning" as "a planning horizon of one year or longer". This document is located on NERC public site: Document Portrait.

Joshua London - Eversource Energy - 1, Group Name Eversource

Answer	No
Document Name	

Comment

Was "previously" meant to be struck in R5.1? The intent of this section was believed to be that if a station was previously found to be impactful, it does not have to be restudied; is that not the case?

Requirement R5.3 should be added stating something similar to "Multiple Transmission Owners of stations within proximity as determined in R2 shall share the results of their analyses related to the stations within proximity with all the other Transmission Owners of the stations within proximity."

Likes 0	
Dislikes 0	

Response

Thank you for the comment. The Drafting Team has added "previously" back to section R5.1. Thank you for your suggestion on Requirement R5.3. The drafting team did discuss this and believes the existing standard language does not preclude the TO from sharing their results with proximate substation owners.

Nikki Carson-Marquis - Nikki Carson-Marquis On Behalf of: Theresa Allard, Minnkota Power Cooperative Inc., 1; - Nikki Carson-Marquis

Answer	No
Document Name	
Comment	

MPC strongly disagrees with the use of a 36-month timeframe for utilities who have not previously identified any substations as critical as it is both outside the scope of the SAR and will lead to increased study costs with little or no benefit to BES reliability.

During the 6/7/24 NERC webinar for Draft 1, the SDT stated the goal of changing the risk assessment timeframe to 36 months was to align the CIP-014 risk assessment with the model build timeframe of another standard. Later, MPC requested clarification on which standard the SDT is aligning with during the 10/17/24 industry webinar, and the SDT indicated it aligns with the 12-month timeframe of the TPL-001 standard.

The CIP-014 analysis does not depend on the models built for TPL-001, and MPC believes changing the CIP-014 study timing to align with the TPL-001 model build process provides no additional reliability benefit to the BES for entities that have not identified critical stations/substations. Furthermore, the existing 60-month timeframe can also align with the 12-month model build timeframe of the TPL-001 standard.

Stations and substations planned to be in service within 24 months of the CIP-014 risk assessment are already required to be included under R1 of CIP-014-3 (or within 36 months with proposed CIP-014-4 R1), which suggests that decreasing the risk assessment timeframe from 60 months to 36 months is very unlikely to identify stations or substations that would not already be identified under CIP-014 R1. Moreover, the very slow pace of construction of new electrical infrastructure due to increased equipment lead times, supply chain constraints, and labor shortages makes it highly unlikely that modifications to an existing non-critical Transmission station or substation could be planned, designed, and constructed such that it would be elevated to a critical station/substation within 36 months. It is equally unlikely that a newly constructed CIP-014 critical substation would be completed within this timeframe.

For utilities who have previously not identified substations as critical, reducing the risk assessment timeframe from 60 months to 36 months will result in increased costs due to more frequent risk assessments, with the more frequent assessments having no reliability benefit as they have little to no chance of identifying more Transmission stations or substations as CIP-014 critical that would not already have been under the CIP-014-3 Standard.

Likes 0	
Dislikes 0	

Response

Thank you for your comments. The DT did look into this and believes that the current version meets the work scope of the SAR. Requirement R1 is revised to ensure that each Transmission Owner establishes a list of applicable Transmission station(s) or Transmission substation(s) in accordance with Attachment 1. Aligning the 36 calendar months look ahead in Requirement R1 with the 36 calendar month risk assessment cycle ensures that system topology of the cases used to assess applicability is consistent with the system topology in the risk assessment models.

Gary Trezza - Long Island Power Authority - 1 - NPCC

Answer	No
Document Name	
Comment	

Was “previously” meant to be struck in R5.1? The intent of this section was believed to be that if a station was previously found to be impactful, it does not have to be restudied; is that not the case?

It is recommended that a new “Requirement R5.3” be added stating something similar to “Multiple Transmission Owners of stations within proximity as determined in R2 shall share the results of their analyses related to the stations within proximity with all the other Transmission Owners of the stations within proximity.”

Likes 0	
Dislikes 0	

Response

Thank you for the comment. The Drafting Team has added “previously” back to section R5.1. Thank you for your suggestion on Requirement R5.3. The drafting team did discuss this and believe the existing standard language does not preclude the TO from sharing their results with proximate substation owners.

Matt Carden - Southern Company - Southern Company Services, Inc. - 1

Answer	No
Document Name	

Comment

Southern Company agrees with the intent of this requirement. However, as it is presently written, the requirement only applies to jointly owned Transmission station(s) and Transmission substation(s). Consider the below modifications:

R5. At least once every 36 calendar months, each Transmission Owner shall perform a risk assessment to identify Transmission station(s) and Transmission substation(s) that if rendered inoperable or damaged as a result of a physical attack could result in instability, uncontrolled separation, or Cascading within an Interconnection, using the methodology established in Requirement R3 including any Transmission station(s) and Transmission substation(s) identified in accordance with documentation established per Requirements R1, R2, and R4.

Likes 0	
Dislikes 0	

Response

Thank you for your comment. Please see the revised Requirement R5. The drafting team made extensive modifications to clarify that a risk assessment shall be performed at least once every 36 calendar months for all of the Transmission station(s) and Transmission substation(s) identified in Requirements R1, R2 and R4, using the methodology established in Requirement R3, as well as identification of associated primary control centers.

Jessica Cordero - Unisource - Tucson Electric Power Co. - 1

Answer	No
Document Name	

Comment

Does not provide an option for de-classification of a Transmission Substation from critical to non-critical. Additional projects could provide more resiliency to the BES that could result in a substation no longer causing instability, uncontrolled separation, or Cascading within an Interconnection when rendered inoperable or damaged as a result of a physical attack.

Language R5.1 does not provide additional value and is confusing.

How many assessments can be skipped for a specific site identified that causes instability, uncontrolled separation, or Cascading within an Interconnection when rendered inoperable or damaged as a result of a physical attack? The current language implies that a site that is initially identified as causing instability, uncontrolled separation, or Cascading within an Interconnection never needs to be re-evaluated in any future risk assessments.

Likes 0	
Dislikes 0	

Response

Thank you for your comment. Please see revised language. The drafting team made extensive modifications to better lay out the intent of the assessment as well as identification of associated primary control centers.

Ruida Shu - Northeast Power Coordinating Council - 1,2,3,4,5,6,7,8,9,10 - NPCC, Group Name NPCC RSC

Answer	No
Document Name	

Comment

We suggest adding language about required actions where a TO designate another entity's Control Center in part 5.2. for instance, coordination between the entities and information security.

Was "previously" meant to be struck in R5.1? The intent of this section was believed to be that if a station was previously found to be impactful, it does not have to be restudied; is that not the case?

Requirement R5.3 should be added stating something similar to "Multiple Transmission Owners of stations within proximity as determined in R2 shall share the results of their analyses related to the stations within proximity with all the other Transmission Owners of the stations within proximity."

Likes 0	
Dislikes 0	

Response

Thank you for your comments.

Requirement R5, Part 5.2 (now Part 5.3) only requires the Transmission Owner to identify its associated primary control center. No coordination with information security is required.

The word "previously" has been added back. Please see revised language in Requirement R5.

The drafting team made extensive modifications to better express the intent of the assessment as well as identification of associated primary control centers.

Stephen Stafford - Stephen Stafford On Behalf of: Greg Davis, Georgia Transmission Corporation, 1; - Stephen Stafford

Answer	No
Document Name	

Comment

There is no issue with performing a risk assessment every 36 months.

Reference responses to the previous questions on R3 & R4 regarding the appropriateness of the planning study being governed in the TPL space and not within CIP-014.	
Likes 0	
Dislikes 0	
Response	
Thank you for your comment. The second suggestion is out of scope of this project.	
Diana Aguas - CenterPoint Energy Houston Electric, LLC - 1 - Texas RE	
Answer	No
Document Name	
Comment	
CEHE agrees with EEI's comments on clarification of Requirement 5.1 if a Transmission station or substation will need to be restudied every 36 calendar months after it's been already identified or keeping them on the list for a risk assessment is sufficient.	
Likes 0	
Dislikes 0	
Response	
Thank you for your comments. Please see the responses to the EEI's comments.	
Chantal Mazza - Chantal Mazza On Behalf of: Junji Yamaguchi, Hydro-Quebec (HQ), 1, 5; Nicolas Turcotte, Hydro-Quebec (HQ), 1, 5; - Chantal Mazza	
Answer	No
Document Name	
Comment	
We suggest adding language about required actions where a TO designate another entity's Control Center in part 5.2. for instance, coordination between the entities and information security. Was "previously" meant to be struck in R5.1? The intent of this section was believed to be that if a station was previously found to be impactful, it does not have to be restudied; is that not the case? Requirement R5.3 should be added stating something similar to "Multiple Transmission Owners of stations within proximity as determined in R2 shall share the results of their analyses related to the stations within proximity with all the other Transmission Owners of the stations within proximity."	
Likes 0	
Dislikes 0	
Response	
Thank you for your comments. The word "previously" is added back. The drafting team made extensive modifications in Requirement R5 to better layout the intent of the assessment as well as identification of associated primary control centers.	

Lucinda Bradshaw - Lucinda Bradshaw On Behalf of: Byron Booker, Oncor Electric Delivery, 1; - Lucinda Bradshaw	
Answer	No
Document Name	
Comment	
Please see Oncor's comments in response to Question 1, above.	
Likes 0	
Dislikes 0	
Response	
Thank you for your comment. Please see responses to Oncor's comment.	
Dave Krueger - SERC Reliability Corporation - 10	
Answer	No
Document Name	
Comment	
SERC appreciates the ongoing efforts to refine the CIP-014 Risk Assessment portion of the standard. SERC suggests the change from the phrase 'the primary control center' to 'each primary control center' to address real-world situations where different control centers may independently control different Elements within a Transmission station or substation.	
Likes 0	
Dislikes 0	
Response	
Thank you for your comments. The drafting team would like to keep "the primary control center" for associated Elements as in the approved previous version. It is the Transmission Owner's responsibility to identify one primary control center associated with that particular Transmission station or Transmission substation.	
Jamison Cawley - Nebraska Public Power District - 1	
Answer	No
Document Name	
Comment	
We request clarification of the phrase "rendered inoperable or damaged". There seems to be an incongruity between a facility that is simply damaged and one that is rendered inoperable. The phrase "or damaged" indicates a less severe impact than "rendered inoperable", for instance just a portion of the substation may be damaged. We request definitions for "inoperable" and "damaged", as recommended by the NERC 2023 CIP-014 evaluation report, to provide clear intent of the risk assessment. Please explain the technical basis for the change from 60 months (with no previous applicable substations identified) to 36 months for re-performance of the risk assessment. If no technical basis exists, we request the period be returned to the original 60 months. Reducing the period to 36 months will place additional burdens on Transmission Planners, which pulls resources from activities that are also important to grid reliability. Further, most	

significant EHV expansion projects which would alter the previous base case assumptions do not occur every 36 months and are more in line with 60-month construction periods.	
Likes 0	
Dislikes 0	

Response

Thank you for your comments. Regarding the use of "rendered inoperable or damaged", we note that this has existed in all versions of CIP-014; furthermore, we believe it is adequately explained through what is prescribed in the new Requirement R3.

The SAR required the DT to align multiple timelines in CIP-014-3. Requirement R1 is revised to ensure that each Transmission Owner establishes a list of applicable Transmission station(s) or Transmission substation(s) in accordance with Attachment 1. Aligning the 36 calendar months look ahead in Requirement R1 with the 36 calendar month risk assessment cycle ensures that system topology of the cases used to assess applicability is consistent with the system topology in the risk assessment models. The 36 calendar months cycle for updating the list of applicable Transmission station(s) or Transmission substation(s) per Attachment 1 aligns with the annual cycle for performing Planning Assessments per NERC Standard TPL-001. The 36 calendar months risk assessment study cycle aligns with the 36 calendar months planned-to-be-in-service date.

Nick Leathers - Nick Leathers On Behalf of: David Jendras Sr, Ameren - Ameren Services, 3, 6, 1; - Nick Leathers

Answer	No
Document Name	

Comment

R5.1: Ameren would like more clarity around what is meant by additional simulations.

Likes 0	
Dislikes 0	

Response

Thank you for your comment. Please see revised language in the Standard. The drafting team made extensive modifications in Requirement R5 to clarify the intent of the assessment.

Jennifer Mcnally - Duke Energy - 1,3,5,6 - Texas RE,SERC,RF

Answer	No
Document Name	

Comment

Duke Energy supports the overall modifications made in R5 and also supports EEI's ask for additional clarity in 5.1. We believe that the Drafting Team intended that stations and substations that have already been identified and protected will not require further assessment or demonstration of stability issues but can simply remain as identified and protected sites within an entity's program.

Likes 0	
Dislikes 0	

Response

Thank you for your comment. Please see the response to the EEI's comments.

Gail Elliott - Gail Elliott On Behalf of: Michael Moltane, International Transmission Company Holdings Corporation, 1; - Gail Elliott

Answer	No
Document Name	

Comment

R5. At least once every 36 calendar months, each Transmission Owner shall perform a risk assessment to identify Transmission station(s) and Transmission substation(s) that if rendered inoperable or damaged as a result of a physical attack could result in instability, uncontrolled separation, or Cascading within an Interconnection, using the methodology established in Requirement R3 including any Transmission station(s) and Transmission substation(s) for its assessment identified in R1 and R2.

Likes 0	
Dislikes 0	

Response

Thank you for your comments and suggestions. Please see revised language in Requirement R5. The drafting team made some modifications to better express the intend of the assessment.

Ellese Murphy - Ellese Murphy On Behalf of: Katherine Street, Duke Energy , 5, 6, 1, 1; - Ellese Murphy

Answer	No
Document Name	

Comment

Duke Energy supports the overall modifications made in R5 and also supports EEI's ask for additional clarity in 5.1. We believe that the Drafting Team intended that stations and substations that have already been identified and protected will not require further assessment or demonstration of stability issues but can simply remain as identified and protected sites within an entity's program.

Likes 0	
Dislikes 0	

Response

Thank you for your comment. Please see the response to the EEI's comments.

Israel Perez - Israel Perez On Behalf of: Laura Somak, Salt River Project, 3, 6, 5, 1; Mathew Weber, Salt River Project, 3, 6, 5, 1; Thomas Johnson, Salt River Project, 3, 6, 5, 1; Timothy Singh, Salt River Project, 3, 6, 5, 1; - Israel Perez

Answer	No
Document Name	

Comment

Salt River Project (SRP) agrees with EEI's comments on clarification of Requirement 5.1 if a Transmission station or substation will need to be restudied every 36 calendar months after it's been already identified or keeping them on the list for a risk assessment is sufficient.

Likes 0	

Dislikes 0	

Response
Thank you for your comment. Please see responses to EEI's comments.

Ronald Hoover - Bonneville Power Administration - 1,3,5,6 - WECC	
Answer	Yes
Document Name	

Comment
BPA has identified that the SAR does not include content for when a problem needs resolution when there is Joint Ownership of a substation. The SAR's purpose only states "Clarify how to account for adjacent Transmission stations or Transmission substations of differing ownership as well as for those Transmission stations or Transmission substations within line-of-sight to each other." BPA recommends adding clarification for problem resolution to account for unforeseen circumstances.

Likes 0	
Dislikes 0	

Response
Thank you for your comment. Resolution process that may differ from region to region or company to company.

Leshel Hutchings - AEP - 3	
Answer	Yes
Document Name	

Comment
None

Likes 0	
Dislikes 0	

Response
Thank you for your support.

Mark Garza - FirstEnergy - FirstEnergy Corporation - 4, Group Name FE Voter	
Answer	Yes
Document Name	

Comment
For the Drafting Teams consideration: Clarification is needed regarding stations and substations identified in previous risk assessments as causing instability, uncontrolled separation, or Cascading within an interconnection when rendered inoperable or damaged as a result of a physical attack if those substations will need to be studied is

subsequent risk assessments. In other words, once a station or substation has been identified as ‘critical’ can the TO assume it will continue to be ‘critical’ without having to assess it again?

Likes 0	
Dislikes 0	

Response

Thank you for your support and comments. The answer is yes, once a station or substation has been identified as ‘critical’, the station will continue to be ‘critical’ without having to assess it again. Removing a station from the critical list, the TO has to re-assess it to approve it. Please see the language in Requirement R5, 5.2.

Ben Hammer - Western Area Power Administration - 1

Answer	Yes
Document Name	

Comment

Please provide clarity on the differences between “inoperable” and “damaged” as a result of a physical attack.

Consider adding examples to address various scenarios involving both the substation under study and adjacent substations within the ½ mile proximity.

Likes 0	
Dislikes 0	

Response

Thank you for your support and comments. It is the position of the DT that citing specific examples would be inadvisable primarily due to grid security issues but also due to regional grid variances. As stated previously, we believe that “rendered inoperable or damaged” is adequately explained through what is prescribed in the new Requirement R3.

Donna Wood - Tri-State G and T Association, Inc. - 1

Answer	Yes
Document Name	

Comment

Tri-State supports MRO NSRF Comments.

Likes 0	
Dislikes 0	

Response

Thank you for your support and comments. Please see responses to MRO NSRF’s comments.

Devin Shines - PPL - Louisville Gas and Electric Co. - 1,3,5,6 - SERC,RF

Answer	Yes
Document Name	

Comment

LG&E/KU supports the modifications in Requirement R5, but suggests two non-substantive clarifications.

First, in the main body of Requirement R5 clarify, "… using the methodology established in Requirement R3 [*including any Transmission station(s) and Transmission substation(s) identified*] **and, where appropriate,** in accordance with **the responsibilities** document[*ation establish*]ed per Requirement R4." As currently written, this sentence implies additional Transmission station(s) and Transmission substation(s) are identified in Requirement R4. However, Requirement R4 only establishes responsibilities for stations with multiple owners. The suggested clarification sharpens the connection between Requirements R4 and R5.

Second, in Requirement R5 Part 5.2 clarify, "… identified **as causing instability, uncontrolled separation, or Cascading within an Interconnection** in the Requirement R5 risk assessment." This Part previously said identified as "critical". Removing the undefined "critical" is a good change, but "identified" does not convey the same meaning on its own.

Likes 0	
Dislikes 0	

Response

Thank you for your support and comments.

After the modification, the current revision says that "At least once every 36 calendar months, each Transmission Owner shall perform a risk assessment to identify applicable Transmission station(s) and Transmission substation(s) identified in Requirement R1, that if rendered inoperable or damaged could result in instability, uncontrolled separation, or Cascading within an Interconnection, using the methodology established in Requirement R3, including any Transmission station(s) and Transmission substation(s) identified in accordance with Requirement R4. If proximate Transmission station(s) and Transmission substation(s) were identified in Requirement R2, they should also be included in the risk assessment." The drafting team believes that this new language provides more clarity.

Please see revised language in Requirement R5, Part 5.3. "as causing instability, uncontrolled separation, or Cascading within an Interconnection when rendered inoperable or damaged" has been added as suggested.

Amy Wesselkamper - PNM Resources - Public Service Company of New Mexico - 3

Answer	Yes
Document Name	

Comment

PNM and TNMP support EEI comments.

Likes 0	
Dislikes 0	

Response

Thank you for your support. Please see responses to the EEI's comments.

Clay Walker - Clay Walker On Behalf of: Robert Hirchak, Cleco Corporation, 6, 5, 1, 3; - Clay Walker

Answer	Yes
Document Name	
Comment	
Cleco agrees with EEI comments.	
Likes 0	
Dislikes 0	
Response	
Thank you for your support. Please see responses to the EEI's comments.	
Kristine Martz - Edison Electric Institute - NA - Not Applicable - NA - Not Applicable	
Answer	Yes
Document Name	
Comment	
EEI asks the drafting team to consider adding clarity to the technical rationale describing what is intended by Requirement R5, Part 5.1 that states "A Transmission station or Transmission substation identified in dynamic or steady-state simulations as causing instability, uncontrolled separation, or Cascading within an Interconnection when rendered inoperable or damaged as a result of a physical attack does not require any additional simulations during the current risk assessment." It is not clear if the intention is for those stations and substations to be reassessed every 36 calendar months if they've already been identified, or if keeping them on the list for applying CIP-014 protections is sufficient after their initial assessment.	
Likes 0	
Dislikes 0	
Response	
Thank you for your support and comments. Please see revised language (R5.2) for clarification.	
Dwanique Spiller - Berkshire Hathaway - NV Energy - 5	
Answer	Yes
Document Name	
Comment	
NV Energy appreciates the drafting team reverting to the "identified" language of previous versions for continuity with the remainder of the requirements that remain unchanged. Can the drafting team provide more clarity on what is meant by "if rendered inoperable or damaged as a result of a physical attack"? Rendered inoperable appears to indicate a more severe impact where "or damaged" seems much less severe such as just a portion of a substation system. It is also not clear if rendered inoperable or damaged refers to the substation transmission system or the control and protection systems or both. This is a fundamental source of confusion as to how protection system functions are impacted and how/where faults should be applied for these studies that will be acceptable to auditors. For example, are faults applied simultaneously to different voltage levels, or only at the local substation under attack, or all included elements one at a time? This would seem to depend on the type of attack and what is rendered inoperable or damaged. The	

NERC 2023 CIP-014 evaluation report noted that a criterion should also include defining “inoperable” or “damaged” substations such that the intent of the risk assessment is clear.

It is also unclear if the “physical attack” is on the primary transmission system such as occurring outside the fence remote to the substation or internal on the control house systems inside the substation, or if it is on all systems. An attack could mean there are explosives involved, gunshots remote from the substation, or invasive personnel onsite. Which of these are more likely? There should be more industry agreement on how an attack impacts a substation and the primary system and underlying control and protection systems. The open-ended nature of “physical attack” results in very different interpretations of severity and subsequent protection system fault modeling results. This could be especially true depending on substation locations and inherent risk differences throughout the country. Clarify if the decisions to the questions above are left up to each company and their own assessment methodology?

Add examples to the rationale to address the various scenarios involving a substation under study and any adjacent substations meeting the ½ mile proximity. For example: Are they faulted simultaneously or individually with or without the same damage or inoperability? Are these questions up to each individual assessment methodology?

Likes 0	
Dislikes 0	

Response

Thank you for your support and comments. Please see revised language to address your concerns (Requirement R3). Also, the DT provided the latitude for entities to define their own event while complying with the methodology requirements in R3.

TRACEY JOHNSON - Southern Indiana Gas and Electric Co. - 3,5,6 - RF

Answer	Yes
Document Name	

Comment

Southern Indiana Gas and Electric Company d/b/a CenterPoint Energy Indiana South (SIGE) supports the comments as submitted by Edison Electric Institute (EEI).

Likes 0	
Dislikes 0	

Response

Thank you for your support and comments. Please see responses to the EEI’s comments.

Alan Kloster - Alan Kloster On Behalf of: Jeremy Harris, Evergy, 3, 5, 1, 6; Kevin Frick, Evergy, 3, 5, 1, 6; Marcus Moor, Evergy, 3, 5, 1, 6; Tiffany Lake, Evergy, 3, 5, 1, 6; - Alan Kloster

Answer	Yes
Document Name	

Comment

Evergy supports and incorporates by reference the comments of the Edison Electric Institute for question #5.

Likes 0	
Dislikes 0	

Response

Thank you for your support. Please see responses to the EEI's comments.

Alison Nickells - NiSource - Northern Indiana Public Service Co. - 1

Answer	Yes
Document Name	

Comment

The R5 VRF Time Horizon still states it applies to 'Long-term Planning Horizon', whereas the NERC Glossary of Terms defines the 'Near-Term Planning Horizon' as the window covering year 1 through 5. This requirement references 'at least once every 36 calendar months', so it is recommended that the R5 VRF Time Horizon language is updated to reference the 'Near-Term Transmission Planning Horizon'.

Likes 0	
Dislikes 0	

Response

Thank you for your support and comments. NERC Glossary of Terms is different from NERC Time Horizons. NERC Time Horizons define "Long-term Planning" as "a planning horizon of one year or longer". This document is located on NERC public site: Document Portrait.

Robert Blackney - Edison International - Southern California Edison Company - 1

Answer	Yes
Document Name	

Comment

See comments submitted by EEI.

Likes 0	
Dislikes 0	

Response

Thank you for your support. Please see responses to the EEI's comments.

Selene Willis - Edison International - Southern California Edison Company - 5

Answer	Yes
Document Name	

Comment

See EEI Comments

Likes 0	
Dislikes 0	
Response	
Thank you for your support. Please see responses to the EEI's comments.	
Brian Millard - Tennessee Valley Authority - 1,3,5,6 - SERC, Group Name TVA RBB	
Answer	Yes
Document Name	
Comment	
Likes 0	
Dislikes 0	
Response	
Thank you for your support.	
Mark Flanary - Midwest Reliability Organization - 10	
Answer	Yes
Document Name	
Comment	
Likes 0	
Dislikes 0	
Response	
Thank you for your support.	
Matthew Nicklin - Southern Illinois Power Cooperative - 1,3,5 - SERC	
Answer	Yes
Document Name	
Comment	
Likes 0	
Dislikes 0	
Response	
Thank you for your support.	
James Keele - Entergy - 3	

Answer	Yes
Document Name	
Comment	
Likes 0	
Dislikes 0	
Response	
Thank you for your support.	
Rachel Coyne - Texas Reliability Entity, Inc. - 10	
Answer	Yes
Document Name	
Comment	
Likes 0	
Dislikes 0	
Response	
Thank you for your support.	
Rebika Yitna - Rebika Yitna On Behalf of: Roger Brand, MEAG Power, 3, 1; - Rebika Yitna	
Answer	Yes
Document Name	
Comment	
Likes 0	
Dislikes 0	
Response	
Thank you for your support.	
Sean Steffensen - IDACORP - Idaho Power Company - 1	
Answer	Yes
Document Name	
Comment	
Likes 0	

Dislikes 0	
Response	
Thank you for your support.	
Richard Jackson - U.S. Bureau of Reclamation - 1	
Answer	Yes
Document Name	
Comment	
Likes 0	
Dislikes 0	
Response	
Thank you for your support.	
Carver Powers - Utility Services, Inc. - 4	
Answer	Yes
Document Name	
Comment	
Likes 0	
Dislikes 0	
Response	
Thank you for your support.	
Tim Kelley - Tim Kelley On Behalf of: Charles Norton, Sacramento Municipal Utility District, 3, 6, 4, 1, 5; Foung Mua, Sacramento Municipal Utility District, 3, 6, 4, 1, 5; Kevin Smith, Balancing Authority of Northern California, 1; Nicole Looney, Sacramento Municipal Utility District, 3, 6, 4, 1, 5; Ryder Couch, Sacramento Municipal Utility District, 3, 6, 4, 1, 5; Wei Shao, Sacramento Municipal Utility District, 3, 6, 4, 1, 5; - Tim Kelley, Group Name SMUD and BANC	
Answer	Yes
Document Name	
Comment	
Likes 0	
Dislikes 0	
Response	
Thank you for your support.	

Andrew Smith - APS - Arizona Public Service Co. - 5	
Answer	Yes
Document Name	
Comment	
Likes 0	
Dislikes 0	
Response	
Thank you for your support.	
Daniel Gacek - Exelon - 1	
Answer	Yes
Document Name	
Comment	
Likes 0	
Dislikes 0	
Response	
Thank you for your support.	
Robert Jones - Seattle City Light - 4	
Answer	Yes
Document Name	
Comment	
Likes 0	
Dislikes 0	
Response	
Thank you for your support.	
Jennie Wike - Jennie Wike On Behalf of: John Merrell, Tacoma Public Utilities (Tacoma, WA), 1, 4, 5, 6, 3; - Jennie Wike, Group Name Tacoma Power	
Answer	Yes
Document Name	
Comment	

Likes 0	
Dislikes 0	

Response

Thank you for your support.

Teresa Krabe - Lower Colorado River Authority - 5

Answer	Yes
Document Name	

Comment

Likes 0	
Dislikes 0	

Response

Thank you for your support.

James Baldwin - James Baldwin On Behalf of: Matt Lewis, Lower Colorado River Authority, 5, 1; - James Baldwin

Answer	Yes
Document Name	

Comment

Likes 0	
Dislikes 0	

Response

Thank you for your support.

Lidija Efremova - Lidija Efremova On Behalf of: Emma Halilovic, Hydro One Networks, Inc., 1; - Lidija Efremova

Answer	Yes
Document Name	

Comment

Likes 0	
Dislikes 0	

Response

Thank you for your support.

Rachel Schuldt - Black Hills Corporation - 6, Group Name Black Hills Corporation - All Segments	
Answer	Yes
Document Name	
Comment	
Likes 0	
Dislikes 0	
Response	
Thank you for your support.	
Scott Langston - Tallahassee Electric (City of Tallahassee, FL) - 1	
Answer	Yes
Document Name	
Comment	
Likes 0	
Dislikes 0	
Response	
Thank you for your support.	
John Pearson - ISO New England, Inc. - 2	
Answer	Yes
Document Name	
Comment	
Likes 0	
Dislikes 0	
Response	
Thank you for your support.	
Jodirah Green - ACES Power Marketing - 1,3,4,5,6 - MRO,WECC,Texas RE,SERC,RF, Group Name ACES Collaborators	
Answer	Yes
Document Name	
Comment	

Likes 0	
Dislikes 0	
Response	
Thank you for your support.	
Kelley Sargent - Puget Sound Energy, Inc. - 3	
Answer	Yes
Document Name	
Comment	
Likes 0	
Dislikes 0	
Response	
Thank you for your support.	
Bob Cardle - Bob Cardle On Behalf of: Marco Rios, Pacific Gas and Electric Company, 3, 1, 5; Sandra Ellis, Pacific Gas and Electric Company, 3, 1, 5; Tyler Brun, Pacific Gas and Electric Company, 3, 1, 5; - Bob Cardle	
Answer	Yes
Document Name	
Comment	
Likes 0	
Dislikes 0	
Response	
Thank you for your support.	
Amy Wilke - American Transmission Company, LLC - 1	
Answer	Yes
Document Name	
Comment	
Likes 0	
Dislikes 0	
Response	
Thank you for your support.	

Stefanie Burke - Portland General Electric Co. - 6	
Answer	Yes
Document Name	
Comment	
Likes 0	
Dislikes 0	
Response	
Thank you for your support.	
Richard Vendetti - NextEra Energy - 5	
Answer	
Document Name	
Comment	
NextEra supports the comments provided by EEI below: EEI asks the drafting team to consider adding clarity to the technical rationale describing what is intended by Requirement R5, Part 5.1 that states “A Transmission station or Transmission substation identified in dynamic or steady-state simulations as causing instability, uncontrolled separation, or Cascading within an Interconnection when rendered inoperable or damaged as a result of a physical attack does not require any additional simulations during the current risk assessment.” It is not clear if the intention is for those stations and substations to be reassessed every 36 calendar months if they’ve already been identified, or if keeping them on the list for applying CIP-014 protections is sufficient after their initial assessment.	
Likes 0	
Dislikes 0	
Response	
Thank you for your support and comments. Please see responses to the EEI’s comments.	

6. Do you agree with the Implementation Plan for CIP-014-4?

Bob Cardle - Bob Cardle On Behalf of: Marco Rios, Pacific Gas and Electric Company, 3, 1, 5; Sandra Ellis, Pacific Gas and Electric Company, 3, 1, 5; Tyler Brun, Pacific Gas and Electric Company, 3, 1, 5; - Bob Cardle

Answer	No
Document Name	

Comment

The CIP-014-4 standard introduces a significant change by requiring the inclusion of stations within a 1/2-mile line of sight or easily accessible from a common roadway. However, the standard lacks clear guidelines for selecting stations. This could lead to inconsistencies and challenges in implementation, as different Transmission Owners and Transmission Operators may interpret and apply the criteria differently.

To improve clarity and ensure consistent implementation, the standard should provide more detailed guidance on the selection of stations, including specific criteria for evaluating lines of sight and ease of access from common roadways. This would help Transmission Owners and Transmission Operators to better understand the requirements and apply them consistently, ensuring the reliability and security of the electrical grid.

Likes 0	
Dislikes 0	

Response

Thank you for your comment. Please see the revised Standard for your concern. In addition, the initial performance of periodic Requirements is clarified in the Implementation Plan.

Alison Nickells - NiSource - Northern Indiana Public Service Co. - 1

Answer	No
Document Name	

Comment

NIPSCO agrees with Southern CO:

It potentially could be excessively burdensome on a Transmission Owner (TO) to be required to perform a new risk assessment study within 24 months of the effective implementation date of the revised CIP-014-4 standard. Additionally, limited resources may be available to complete a verification within 90 days of the effective date per Requirement R6.

For example, given the current CIP-014-3 R1.1 30 calendar month subsequent risk assessment requirement schedule for a TO which has substations identified under R1, the TO may currently be required to complete a subsequent R1 study as of September 30, 2025.

If the revised standard has an effective implementation date of October 1, 2025, the TO would be required to complete a new R1 study within 24 months of October 1, 2025. A more effective and efficient

methodology is a phased approach based on the TO's completion date of the TO's most recent R1.1 subsequent risk assessment study.

Proposed Language: Each TO shall conduct its first assessment under CIP-014-4 within 36 calendar months after the effective date or within 36 calendar months after their last assessment under CIP-014-3, whichever occurs later.

Likes 0	

Dislikes 0	
Response	
Thank you for your comment. The initial performance of periodic Requirements is clarified in the Implementation Plan.	
Gail Elliott - Gail Elliott On Behalf of: Michael Moltane, International Transmission Company Holdings Corporation, 1; - Gail Elliott	
Answer	No
Document Name	
Comment	
For entities with facilities spread over many states that were constructed at significantly different times, the additional work included in this version will make it more complicated to complete by the effective date. Additional constraints with completing the required work will occur depending on the timing of their compliance with the existing version. An additional 6 months, or 30 months, would make this more feasible.	
Likes 0	
Dislikes 0	
Response	
Thank you for your comment. The initial performance of periodic Requirements is clarified in the Implementation Plan.	
TRACEY JOHNSON - Southern Indiana Gas and Electric Co. - 3,5,6 - RF	
Answer	No
Document Name	
Comment	
SIGE proposes to increase the implementation plan to 36 calendar months to align with the standard and give the industry more time to implement the changes in CIP-014-4.	
Likes 0	
Dislikes 0	
Response	
Thank you for your comment. The initial performance of periodic Requirements is clarified in the Implementation Plan.	
Lucinda Bradshaw - Lucinda Bradshaw On Behalf of: Byron Booker, Oncor Electric Delivery, 1; - Lucinda Bradshaw	
Answer	No
Document Name	
Comment	
N/A	
Likes 0	

Dislikes 0	
Response	
Diana Aguas - CenterPoint Energy Houston Electric, LLC - 1 - Texas RE	
Answer	No
Document Name	
Comment	
CEHE proposes to extend the implementation plan to 36 calendar months to align with the standard and give the industry more time to implement the changes in CIP-014-4.	
Likes 0	
Dislikes 0	
Response	
Thank you for your comment. The initial performance of periodic Requirements is clarified in the Implementation Plan.	
Stephen Stafford - Stephen Stafford On Behalf of: Greg Davis, Georgia Transmission Corporation, 1; - Stephen Stafford	
Answer	No
Document Name	
Comment	
There should be some period of time after the standard becomes effective before the risk assessment should be completed. The recommendation is within 24 months following the effective date of this standard.	
Likes 0	
Dislikes 0	
Response	
Thank you for your comment. The initial performance of periodic Requirements is clarified in the Implementation Plan.	
Jessica Cordero - Unisource - Tucson Electric Power Co. - 1	
Answer	No
Document Name	
Comment	
Recommending making CIP-014-4 effective 12 months after applicable government authority approval. The first assessment under CIP-014-4 shall be completed at the earlier of the following:	

- Within 30 calendar months of its previous risk assessment under CIP-014-3 if it identified one or more transmission stations or transmission substations that if rendered inoperable or damaged could result in instability, uncontrolled separation, or cascading within its interconnection in its last CIP-014-3 risk assessment;
- Within 60 calendar months of its previous risk assessment under CIP-014-3 if it did not identify any transmission stations or transmission substations that if rendered inoperable or damaged could result in instability, uncontrolled separation, or cascading within its interconnection in its last CIP-014-3 risk assessment;
- Within 24 months of the effective date of CIP-014-4.

Likes 0	
Dislikes 0	

Response

Thank you for your comment. The initial performance of periodic Requirements is clarified in the Implementation Plan. Based on the industry comments a majority of entities expressed that they need more than 12 months to be ready to comply with CIP-014-4 after applicable government authority approval.

Amy Wesselkamper - PNM Resources - Public Service Company of New Mexico - 3

Answer	No
Document Name	

Comment

PNM and TNMP suggest phased implementation. For example >=24 months to comply with R1-R4 on or before effective date and “initial R5 risk assessment” some period, e.g. 12 calendar months, after effective date.

Likes 0	
Dislikes 0	

Response

Thank you for your comment. The initial performance of periodic Requirements is clarified in the Implementation Plan.

Matt Carden - Southern Company - Southern Company Services, Inc. - 1

Answer	No
Document Name	

Comment

It potentially could be excessively burdensome on a Transmission Owner (TO) to be required to perform a new risk assessment study within 24 months of the effective implementation date of the revised CIP-014-4 standard. Additionally, limited resources may be available to complete a verification within 90 days of the effective date per Requirement R6.

For example, given the current CIP-014-3 R1.1 30 calendar month subsequent risk assessment requirement schedule for a TO which has substations identified under R1, the TO may currently be required to complete a subsequent R1 study as of September 30, 2025.

If the revised standard has an effective implementation date of October 1, 2025, the TO would be required to complete a new R1 study within 24 months of October 1, 2025. A more effective and efficient methodology is a phased approach based on the TO’s completion date of the TO’s most recent R1.1 subsequent risk assessment study.

Proposed Language: Each TO shall conduct its first assessment under CIP-014-4 within 36 calendar months after the effective date or within 36 calendar months after their last assessment under CIP-014-3, whichever occurs later.

Likes 0	
Dislikes 0	

Response

Thank you for your comment. The initial performance of periodic Requirements is clarified in the Implementation Plan. The drafting team believes that 24 calendar months is adequate for the industry to prepare for the new revision of the Standard. Since the current version of CIP-014-3 is on a 30-month cycle, there are a few extra months added for process before Board of Trustee and FERC for adoption/approval once the Standard gets approved by the industry.

Mark Garza - FirstEnergy - FirstEnergy Corporation - 4, Group Name FE Voter

Answer	No
Document Name	

Comment

FirstEnergy sees the current version requiring a 2-year cycle. With the implementation of CIP-014-4, has Drafting Team considered a 5-year gap that could result in the implementation of the newest version?

FirstEnergy also supports EEI Comments which state:

EEI is concerned that the implementation plan requires the initial risk assessment required by CIP-014-4 to be completed on or before the effective date of the Standard and does not provide a phased in approach. The modifications required by the proposed CIP-014-4 include new processes to be established prior to initiating new risk assessments. The proposed 24-month timeline is not reasonable for completing the initial risk assessment. EEI suggests allowing the initiation of CIP-014-4 risk assessments to occur on or before the effective date of the standard to allow additional time to modify programs.

Likes 0	
Dislikes 0	

Response

Thank you for your comment. The initial performance of periodic Requirements is clarified in the Implementation Plan. Based on the current Implementation Plan drafted, the greatest time gap would be 30 calendar months.

Leshel Hutchings - AEP - 3

Answer	No
Document Name	

Comment

The proposed implementation plan is 24 months. This means some Transmission Owners may have insufficient time, less than 36 months, to complete their next assessment based on the new standard. Example: a TO with an existing compliance deadline at the end of this year may fall under the shortened timeline. For large TOs, the existing applicability scoring, case prep, steady state and stability analysis, and third-party review can take as long as 1 year to perform per region. AEP has three regions (PJM, SPP, and ERCOT), which each take this amount of time. With the proposed proximity/applicability changes, scenario changes, and this implementation period would be insufficient time to adopt and reperform the assessment. In

addition, given the new proximity criteria some small TOs may not have had any applicable stations previously and will have to create a new methodology and perform the assessment from scratch within that short 24-month period.

Likes 0	
Dislikes 0	

Response

Thank you for your comment. The initial performance of periodic Requirements is clarified in the Implementation Plan.

Nikki Carson-Marquis - Nikki Carson-Marquis On Behalf of: Theresa Allard, Minnkota Power Cooperative Inc., 1; - Nikki Carson-Marquis

Answer	No
Document Name	

Comment

MPC disagrees with the requirement to perform an analysis under CIP-014-4 prior to the effective date of the standard. This will very likely require utilities to perform a largely duplicative analysis in less than 30 months from their previous analysis. Such a duplicative analysis increases the study burden on utilities for no foreseeable benefit to BES reliability.

Likes 0	
Dislikes 0	

Response

Thank you for your comment. The initial performance of periodic Requirements is clarified in the Implementation Plan.

Ronald Hoover - Bonneville Power Administration - 1,3,5,6 - WECC

Answer	No
Document Name	

Comment

BPA appreciates the addition of the clarifying language about the first R5 due date. However, BPA identifies a potential overlap or gap when considering the current review cycle for the standard against a 24-month implementation plan. It is possible that an entity would have to adopt the new language extremely early to align with its next Version 3 cycle or perform an extra round of CIP-014 activities during the period in between Version 3 activities. BPA recommends using terminology such as that found in other standards such as FAC-014-3 R6:

"Requirement R6 shall be implemented by the Planning Coordinator or Transmission Planner following the effective date of FAC-014-3 when it begins its next cycle for conducting the studies to support its Planning Assessment."

BPA believes the inclusion of this language would help to reduce overall costs for the implementation of the changes.

Likes 0	
Dislikes 0	

Response

Thank you for your comment. The initial performance of periodic Requirements is clarified in the Implementation Plan.

Brian Millard - Tennessee Valley Authority - 1,3,5,6 - SERC, Group Name TVA RBB	
Answer	No
Document Name	
Comment	
TVA proposes to increase the implementation plan to 36 calendar months to align with the standard and give the industry more time to implement the changes in CIP-014-4.	
Likes 0	
Dislikes 0	
Response	
Thank you for your comment. The initial risk assessment required by Reliability Standard CIP-014-4 Requirement R5, must be completed on or before the effective date of the standard. Subsequent risk assessments shall be performed no later than 36 calendar months following the effective date of Reliability Standard CIP-014-4 The implementation plan would then allow 24 calendar months after the effective date of the Applicable Governmental Authority's order approving the standard or as otherwise provided for by the Applicable Governmental Authority.	
Israel Perez - Israel Perez On Behalf of: Laura Somak, Salt River Project, 3, 6, 5, 1; Mathew Weber, Salt River Project, 3, 6, 5, 1; Thomas Johnson, Salt River Project, 3, 6, 5, 1; Timothy Singh, Salt River Project, 3, 6, 5, 1; - Israel Perez	
Answer	Yes
Document Name	
Comment	
Salt River Project (SRP) supports the Implementation Plan.	
Likes 0	
Dislikes 0	
Response	
Thank you for your support.	
Selene Willis - Edison International - Southern California Edison Company - 5	
Answer	Yes
Document Name	
Comment	
See EEI Comments	
Likes 0	
Dislikes 0	
Response	

Thank you for your support. Please see responses to EEI's comments.	
Robert Blackney - Edison International - Southern California Edison Company - 1	
Answer	Yes
Document Name	
Comment	
See comments submitted by EEI.	
Likes 0	
Dislikes 0	
Response	
Thank you for your support. Please see responses to EEI's comments.	
Ellese Murphy - Ellese Murphy On Behalf of: Katherine Street, Duke Energy , 5, 6, 1, 1; - Ellese Murphy	
Answer	Yes
Document Name	
Comment	
Duke Energy supports the Implementation Plan.	
Likes 0	
Dislikes 0	
Response	
Thank you for your support.	
Jennifer Mcnally - Duke Energy - 1,3,5,6 - Texas RE,SERC,RF	
Answer	Yes
Document Name	
Comment	
Duke Energy supports the Implementation Plan.	
Likes 0	
Dislikes 0	
Response	
Thank you for your support.	
Dwanique Spiller - Berkshire Hathaway - NV Energy - 5	

Answer	Yes
Document Name	
Comment	
NV Energy agrees that 24 months is reasonable for implementation.	
Likes 0	
Dislikes 0	
Response	
Thank you for your support.	
Kristine Martz - Edison Electric Institute - NA - Not Applicable - NA - Not Applicable	
Answer	Yes
Document Name	
Comment	
EEI supports the Implementation Plan.	
Likes 0	
Dislikes 0	
Response	
Thank you for your support.	
Stefanie Burke - Portland General Electric Co. - 6	
Answer	Yes
Document Name	
Comment	
Likes 0	
Dislikes 0	
Response	
Thank you for your support.	
Amy Wilke - American Transmission Company, LLC - 1	
Answer	Yes
Document Name	
Comment	

Likes 0	
Dislikes 0	
Response	
Thank you for your support.	
Kelley Sargent - Puget Sound Energy, Inc. - 3	
Answer	Yes
Document Name	
Comment	
Likes 0	
Dislikes 0	
Response	
Thank you for your support.	
Jodirah Green - ACES Power Marketing - 1,3,4,5,6 - MRO,WECC,Texas RE,SERC,RF, Group Name ACES Collaborators	
Answer	Yes
Document Name	
Comment	
Likes 0	
Dislikes 0	
Response	
Thank you for your support.	
Scott Langston - Tallahassee Electric (City of Tallahassee, FL) - 1	
Answer	Yes
Document Name	
Comment	
Likes 0	
Dislikes 0	
Response	
Thank you for your support.	

Rachel Schuldt - Black Hills Corporation - 6, Group Name Black Hills Corporation - All Segments	
Answer	Yes
Document Name	
Comment	
Likes 0	
Dislikes 0	
Response	
Thank you for your support.	
Nick Leathers - Nick Leathers On Behalf of: David Jendras Sr, Ameren - Ameren Services, 3, 6, 1; - Nick Leathers	
Answer	Yes
Document Name	
Comment	
Likes 0	
Dislikes 0	
Response	
Thank you for your support.	
Lidija Efremova - Lidija Efremova On Behalf of: Emma Halilovic, Hydro One Networks, Inc., 1; - Lidija Efremova	
Answer	Yes
Document Name	
Comment	
Likes 0	
Dislikes 0	
Response	
Thank you for your support.	
James Baldwin - James Baldwin On Behalf of: Matt Lewis, Lower Colorado River Authority, 5, 1; - James Baldwin	
Answer	Yes
Document Name	
Comment	

Likes 0	
Dislikes 0	
Response	
Thank you for your support.	
Teresa Krabe - Lower Colorado River Authority - 5	
Answer	Yes
Document Name	
Comment	
Likes 0	
Dislikes 0	
Response	
Thank you for your support.	
Jamison Cawley - Nebraska Public Power District - 1	
Answer	Yes
Document Name	
Comment	
Likes 0	
Dislikes 0	
Response	
Thank you for your support.	
Richard Vendetti - NextEra Energy - 5	
Answer	Yes
Document Name	
Comment	
Likes 0	
Dislikes 0	
Response	
Thank you for your support.	

Alan Kloster - Alan Kloster On Behalf of: Jeremy Harris, Evergy, 3, 5, 1, 6; Kevin Frick, Evergy, 3, 5, 1, 6; Marcus Moor, Evergy, 3, 5, 1, 6; Tiffany Lake, Evergy, 3, 5, 1, 6; - Alan Kloster	
Answer	Yes
Document Name	
Comment	
Likes 0	
Dislikes 0	
Response	
Thank you for your support.	
Dave Krueger - SERC Reliability Corporation - 10	
Answer	Yes
Document Name	
Comment	
Likes 0	
Dislikes 0	
Response	
Thank you for your support.	
Jennie Wike - Jennie Wike On Behalf of: John Merrell, Tacoma Public Utilities (Tacoma, WA), 1, 4, 5, 6, 3; - Jennie Wike, Group Name Tacoma Power	
Answer	Yes
Document Name	
Comment	
Likes 0	
Dislikes 0	
Response	
Thank you for your support.	
Robert Jones - Seattle City Light - 4	
Answer	Yes
Document Name	
Comment	

Likes 0	
Dislikes 0	
Response	
Thank you for your support.	
Daniel Gacek - Exelon - 1	
Answer	Yes
Document Name	
Comment	
Likes 0	
Dislikes 0	
Response	
Thank you for your support.	
Andrew Smith - APS - Arizona Public Service Co. - 5	
Answer	Yes
Document Name	
Comment	
Likes 0	
Dislikes 0	
Response	
Thank you for your support.	
Chantal Mazza - Chantal Mazza On Behalf of: Junji Yamaguchi, Hydro-Quebec (HQ), 1, 5; Nicolas Turcotte, Hydro-Quebec (HQ), 1, 5; - Chantal Mazza	
Answer	Yes
Document Name	
Comment	
Likes 0	
Dislikes 0	
Response	

Thank you for your support.	
Tim Kelley - Tim Kelley On Behalf of: Charles Norton, Sacramento Municipal Utility District, 3, 6, 4, 1, 5; Foung Mua, Sacramento Municipal Utility District, 3, 6, 4, 1, 5; Kevin Smith, Balancing Authority of Northern California, 1; Nicole Looney, Sacramento Municipal Utility District, 3, 6, 4, 1, 5; Ryder Couch, Sacramento Municipal Utility District, 3, 6, 4, 1, 5; Wei Shao, Sacramento Municipal Utility District, 3, 6, 4, 1, 5; - Tim Kelley, Group Name SMUD and BANC	
Answer	Yes
Document Name	
Comment	
Likes 0	
Dislikes 0	
Response	
Thank you for your support.	
Clay Walker - Clay Walker On Behalf of: Robert Hirchak, Cleco Corporation, 6, 5, 1, 3; - Clay Walker	
Answer	Yes
Document Name	
Comment	
Likes 0	
Dislikes 0	
Response	
Thank you for your support.	
Ruida Shu - Northeast Power Coordinating Council - 1,2,3,4,5,6,7,8,9,10 - NPCC, Group Name NPCC RSC	
Answer	Yes
Document Name	
Comment	
Likes 0	
Dislikes 0	
Response	
Thank you for your support.	
Carver Powers - Utility Services, Inc. - 4	
Answer	Yes

Document Name	
Comment	
Likes 0	
Dislikes 0	
Response	
Thank you for your support.	
Richard Jackson - U.S. Bureau of Reclamation - 1	
Answer	Yes
Document Name	
Comment	
Likes 0	
Dislikes 0	
Response	
Thank you for your support.	
Sean Steffensen - IDACORP - Idaho Power Company - 1	
Answer	Yes
Document Name	
Comment	
Likes 0	
Dislikes 0	
Response	
Thank you for your support.	
Devin Shines - PPL - Louisville Gas and Electric Co. - 1,3,5,6 - SERC,RF	
Answer	Yes
Document Name	
Comment	
Likes 0	
Dislikes 0	

Response	
Thank you for your support.	
Donna Wood - Tri-State G and T Association, Inc. - 1	
Answer	Yes
Document Name	
Comment	
Likes 0	
Dislikes 0	
Response	
Thank you for your support.	
Rebika Yitna - Rebika Yitna On Behalf of: Roger Brand, MEAG Power, 3, 1; - Rebika Yitna	
Answer	Yes
Document Name	
Comment	
Likes 0	
Dislikes 0	
Response	
Thank you for your support.	
Gary Trezza - Long Island Power Authority - 1 - NPCC	
Answer	Yes
Document Name	
Comment	
Likes 0	
Dislikes 0	
Response	
Thank you for your support.	
Ben Hammer - Western Area Power Administration - 1	
Answer	Yes
Document Name	

Comment	
Likes 0	
Dislikes 0	
Response	
Thank you for your support.	
Joshua London - Eversource Energy - 1, Group Name Eversource	
Answer	Yes
Document Name	
Comment	
Likes 0	
Dislikes 0	
Response	
Thank you for your support.	
James Keele - Entergy - 3	
Answer	Yes
Document Name	
Comment	
Likes 0	
Dislikes 0	
Response	
Thank you for your support.	
Matthew Nicklin - Southern Illinois Power Cooperative - 1,3,5 - SERC	
Answer	Yes
Document Name	
Comment	
Likes 0	
Dislikes 0	
Response	

Thank you for your support.	
Tamarra Hardie - Tamarra Hardie On Behalf of: Diane E Landry, Public Utility District No. 1 of Chelan County, 3, 5, 1, 6; - Public Utility District No. 1 of Chelan County - 6, Group Name CHPD	
Answer	Yes
Document Name	
Comment	
Likes 0	
Dislikes 0	
Response	
Thank you for your support.	
Mark Flanary - Midwest Reliability Organization - 10	
Answer	Yes
Document Name	
Comment	
Likes 0	
Dislikes 0	
Response	
Thank you for your support.	
Jeffrey Streifling - NB Power Corporation - 1	
Answer	Yes
Document Name	
Comment	
Likes 0	
Dislikes 0	
Response	
Thank you for your support.	
Erin Wilson - NB Power Corporation - New Brunswick Power Transmission Corporation - 5	
Answer	Yes
Document Name	

Comment	
Likes 0	
Dislikes 0	
Response	
Thank you for your support.	
Kevin Conway - Western Power Pool - 4	
Answer	Yes
Document Name	
Comment	
Likes 0	
Dislikes 0	
Response	
Thank you for your support.	
Rachel Coyne - Texas Reliability Entity, Inc. - 10	
Answer	
Document Name	
Comment	
Texas RE recommends the implementation plan specify the list shall be established by the effective date of the standard to avoid delaying compliance obligations an additional 36 months. Absent a specified initial performance date in the implementation plan, the Transmission Owner would have until 36 months after the effective to establish its first list of Transmission station(s) and Transmission substation(s).	
Likes 0	
Dislikes 0	
Response	
Thank you for your comments and recommendations. Please see revised Implementation Plan.	

7. Do you agree that CIP-014-4 is cost effective to address the reliability issue of physical security? If no, why not?

Ronald Hoover - Bonneville Power Administration - 1,3,5,6 - WECC

Answer	No
Document Name	

Comment

BPA does not believe the standard, as is, is cost effective in addressing the reliability of physical security. The spectrum of sites is too broad. BPA believes there is high potential for sites to be identified on CIP-014-4 list that would have little to no effect on the BES if they were disconnected from the grid. The standard, as is, allows sites with RAS capability to be listed as CIP-014, which mitigates an enormous amount of risk, some might argue all. The number of sites that could potentially be categorized as CIP-14 takes resources away from other sites along critical pathways, and sites that directly link to critical infrastructure. Additionally, day-to-day operations of upstream and downstream sites affect whether singular or multiple pieces of equipment in a site are critical. BPA finds the inclusions of R2.1 and R2.2 are so broad as to compound the issues of cost without a large gain in security or reliability. BPA believes the increase in CIP-014 applicability may require more resources than some smaller Transmission Owners have at their disposal. This increase will not only strain the resources of those smaller Transmission Owners but those of larger size within a BA that may be called upon to assist.

Likes 0	
Dislikes 0	

Response

Thank you for the comment. The drafting team balanced concerns regarding the burden on applicable Transmission Owners and the benefits to reliability from identifying and physically protecting those Transmission stations, Transmission substations, and their associated primary control centers that are critical to the reliable and secure operation of the BPS.

Nikki Carson-Marquis - Nikki Carson-Marquis On Behalf of: Theresa Allard, Minnkota Power Cooperative Inc., 1; - Nikki Carson-Marquis

Answer	No
Document Name	

Comment

Requiring the CIP-014 risk assessment every 36 months for utilities who have not previously identified any stations or substations as critical is not cost effective; see MPC's comments in response to Question 5.

Likes 0	
Dislikes 0	

Response

Thank you for the comment. If you do not have any stations meeting Attachment 1 criteria, you do not need an assessment. If your system has not changed, the chances are you will remain the same. The drafting team balanced concerns regarding the burden on applicable Transmission Owners and the benefits to reliability from identifying and physically protecting those Transmission stations, Transmission substations, and their associated primary control centers that are critical to the reliable and secure operation of the BPS.

Leshel Hutchings - AEP - 3

Answer	No

Document Name	

Comment

While this SAR focused on the R1 risk assessment, the most effective protection against all possible threat vectors is to plan redundancy into the Transmission system to remove single points of failure. Protecting individual stations against specific threats will always be less effective than Transmission build out. The standard should be revised to consider Transmission Planning mitigations rather than defaulting to adding physical security.

Likes 0	
Dislikes 0	

Response

Thank you for the comment. The drafting team appreciates your feedback.

Rebika Yitna - Rebika Yitna On Behalf of: Roger Brand, MEAG Power, 3, 1; - Rebika Yitna

Answer	No
Document Name	

Comment

Performing the risk assessment every 36 months rather than every 60 months for those entities with no applicable stations/substations in the previous risk assessment does increase cost for TOs internally and increases the cost of using an unaffiliated 3rd party to verify the risk assessment. Also, it is expected with the newly added 'proximity within 1/2 mile', stations/substations in R2 will incur additional cost burden and not be cost effective, especially if the station/substation in 'proximity within 1/2 mile' is also found to be applicable and requires physical security enhancements to address any potential threats and/or vulnerabilities.

Likes 0	
Dislikes 0	

Response

Thank you for the comment. The drafting team balanced concerns regarding the burden on applicable Transmission Owners and the benefits to reliability from identifying and physically protecting those Transmission stations, Transmission substations, and their associated primary control centers that are critical to the reliable and secure operation of the BPS. The DT also reduced the ½ mile to 1500 feet.

Matt Carden - Southern Company - Southern Company Services, Inc. - 1

Answer	No
Document Name	

Comment

Southern Company recognizes the financial impacts of performing the risk assessment every 36 months rather than 60 months for Transmission Owners that have not identified any Transmission stations or Transmission substations. This is magnified by the requirement to have an unaffiliated third party verify the risk assessment at a higher frequency.

Likes 0	
Dislikes 0	

Response
Thank you for the comment. The drafting team balanced concerns regarding the burden on applicable Transmission Owners and the benefits to reliability from identifying and physically protecting those Transmission stations, Transmission substations, and their associated primary control centers that are critical to the reliable and secure operation of the BPS. In the previous version of CIP-014, the 30-month time frame and the 24-month planned-to-be-in-service date could, if not carefully applied, lead to gaps between models and study horizons. Aligning the 36 calendar months look ahead in Requirement R1 with the 36 calendar month risk assessment cycle ensures that system topology of the cases used to assess applicability is consistent with the system topology in the risk assessment models. It is necessary to perform the risk assessment every 36 months and closing the gap for reliability is the priority.

Amy Wesselkamper - PNM Resources - Public Service Company of New Mexico - 3	
Answer	No
Document Name	
Comment	
Increasing the frequency of risk assessments, including the R6 requirement for third-party validation causes increase demand on resources. The cost seems disproportionate to the potential benefit.	
Likes 0	
Dislikes 0	

Response
Thank you for the comment. The drafting team balanced concerns regarding the burden on applicable Transmission Owners and the benefits to reliability from identifying and physically protecting those Transmission stations, Transmission substations, and their associated primary control centers that are critical to the reliable and secure operation of the BPS.

Stephen Stafford - Stephen Stafford On Behalf of: Greg Davis, Georgia Transmission Corporation, 1; - Stephen Stafford	
Answer	No
Document Name	
Comment	
The issues of requiring Transmission Owners perform a Transmission Planning/Planning Coordinator function is problematic and makes assessment of cost-effectiveness unclear. Additionally, this dynamic will continue to lead to lack of clarity and consistency in the auditing of this standard which could result in cost and workload to address/respond to the requirements and audit reviews. Additionally, the requirement to add stations that are within a ½ mile radius of applicable stations will add more cost without any justification for the requirement. Furthermore, requiring a third-party verification of a planning assessment appears to be an unnecessary expense. Is there supporting evidence from the 2015 – 2024 time-period to show the benefits of this verification?	
Likes 0	
Dislikes 0	

Response
Thank you for the comment. Please see revised Standard. The drafting team appreciates your feedback on cost effective. The drafting team balanced concerns regarding the burden on applicable Transmission Owners and the benefits to reliability from identifying and physically protecting those Transmission stations, Transmission substations, and their associated primary control centers that are critical to the reliable and secure operation of the BPS. The drafting team has reduced ½ mile to 1500 feet or 457 meters (the shortest distance, measured substation fence line to substation fence line) of an applicable Transmission station or Transmission substation identified in Requirement R1. This should reduce some cost.

Diana Aguas - CenterPoint Energy Houston Electric, LLC - 1 - Texas RE	
Answer	No
Document Name	
Comment	
CEHE believes increasing the study requirements and processes will cause an additional burden on TPs and the additional engineering hours will not be cost effective with current resources.	
Likes 0	
Dislikes 0	
Response	
Thank you for the comment. The drafting team is aware that increasing the Requirements seems to increase the work, in order to meet the SAR work scope.The drafting team balanced concerns regarding the burden on applicable Transmission Owners and the benefits to reliability from identifying and physically protecting those Transmission stations, Transmission substations, and their associated primary control centers that are critical to the reliable and secure operation of the BPS.	
Lucinda Bradshaw - Lucinda Bradshaw On Behalf of: Byron Booker, Oncor Electric Delivery, 1; - Lucinda Bradshaw	
Answer	No
Document Name	
Comment	
The comments above demonstrate that additional clarity is needed on certain portions of this revised CIP-014-4. Without that additional clarity, Oncor cannot state that the proposed changes to CIP-014-3 are cost effective. As noted above, some of these proposed revisions create additional burdens on TOs that could increase costs to TOs. For example, the additional burdens on TOs created in R2 and R4 will require new procedures and processes to be developed, documented, approved, and implemented – including the development and implementation of additional training concerning the new requirements.	
Likes 0	
Dislikes 0	
Response	
Thank you for the comment. The drafting team balanced concerns regarding the burden on applicable Transmission Owners and the benefits to reliability from identifying and physically protecting those Transmission stations, Transmission substations, and their associated primary control centers that are critical to the reliable and secure operation of the BPS.	
Jamison Cawley - Nebraska Public Power District - 1	
Answer	No
Document Name	
Comment	
Eliminate the third-party review included in Requirement R10. This is a considerable expense and has not been proven to add value to the Standard, having been disregarded by enforcement entities during numerous compliance monitoring activities. Please retire Requirement R10.	

Likes 0	
Dislikes 0	

Response

Thank you for the comment. Third party verification was previously approved. The drafting team believes that having an unaffiliated third party review the evaluation performed under Requirement R8 and the security plan(s) developed under Requirement R9 is critical to reliability. The drafting team balanced concerns regarding the burden on applicable Transmission Owners and the benefits to reliability from identifying and physically protecting those Transmission stations, Transmission substations, and their associated primary control centers that are critical to the reliable and secure operation of the BPS.

Teresa Krabe - Lower Colorado River Authority - 5

Answer	No
Document Name	

Comment

The cost-effectiveness of CIP-014-4 in addressing physical security and reliability concerns is not entirely clear. The changes introduced, particularly regarding proximity criteria, may lead to a broader range of substations being classified for criticality assessment. This expansion could result in increased costs for compliance and implementation.

Likes 0	
Dislikes 0	

Response

Thank you for the comment. The drafting team balanced concerns regarding the burden on applicable Transmission Owners and the benefits to reliability from identifying and physically protecting those Transmission stations, Transmission substations, and their associated primary control centers that are critical to the reliable and secure operation of the BPS.

James Baldwin - James Baldwin On Behalf of: Matt Lewis, Lower Colorado River Authority, 5, 1; - James Baldwin

Answer	No
Document Name	

Comment

The cost-effectiveness of CIP-014-4 in addressing physical security and reliability concerns is not entirely clear. The changes introduced, particularly regarding proximity criteria, may lead to a broader range of substations being classified for criticality assessment. This expansion could result in increased costs for compliance and implementation.

Likes 0	
Dislikes 0	

Response

Thank you for the comment. The drafting team balanced concerns regarding the burden on applicable Transmission Owners and the benefits to reliability from identifying and physically protecting those Transmission stations, Transmission substations, and their associated primary control centers that are critical to the reliable and secure operation of the BPS.

Jennifer Mcnally - Duke Energy - 1,3,5,6 - Texas RE,SERC,RF

Answer	No

Document Name	
Comment	
Duke Energy does not agree that CIP-014-4 is cost effective as proposed due to the ambiguity that still exists in the requirement language.	
Likes 0	
Dislikes 0	
Response	
Thank you for the comment. Please see revised Standard. The drafting team balanced concerns regarding the burden on applicable Transmission Owners and the benefits to reliability from identifying and physically protecting those Transmission stations, Transmission substations, and their associated primary control centers that are critical to the reliable and secure operation of the BPS.	
Gail Elliott - Gail Elliott On Behalf of: Michael Moltane, International Transmission Company Holdings Corporation, 1; - Gail Elliott	
Answer	No
Document Name	
Comment	
There are two requirements that increase the cost to complete this study that do not improve reliability significantly. The first is R4. Collecting existing documentation on compliance responsibilities will only improve reliability if neither entity is performing a CIP-014 on specific sites. In NERC's, report this was not identified as a reliability gap. The second is for R2 where entities need to one share their existing and planned future applicable sites with other entities in order to receive data on whether or not they have or plan to build a transmission site nearby. Based on the footprints and configurations of a Transmission Owners facilities, this could involve disclosing to a number of entities information that is deemed sensitive if not CEII.	
Likes 0	
Dislikes 0	
Response	
Thank you for the comment. Please see revised Standard. Requirement R2 provides applicable entities clarification on which station(s) and substation(s) are applicable. Because the CIP-014-4 Risk Assessment Refinement SAR calls for clarification regarding Transmission substations and Transmission stations of differing ownership, this section was clarified in Requirement R4. Requirement R4 is to close the reliability gaps on different ownership of the stations. This issue was missing from the standard language. The drafting team balanced concerns regarding the burden on applicable Transmission Owners and the benefits to reliability from identifying and physically protecting those Transmission stations, Transmission substations, and their associated primary control centers that are critical to the reliable and secure operation of the BPS.	
Ellese Murphy - Ellese Murphy On Behalf of: Katherine Street, Duke Energy , 5, 6, 1, 1; - Ellese Murphy	
Answer	No
Document Name	
Comment	
Duke Energy does not agree that CIP-014-4 is cost effective as proposed due to the ambiguity that still exists in the requirement language.	
Likes 0	
Dislikes 0	

Response
Thank you for the comment. Please see revised Standard. The drafting team balanced concerns regarding the burden on applicable Transmission Owners and the benefits to reliability from identifying and physically protecting those Transmission stations, Transmission substations, and their associated primary control centers that are critical to the reliable and secure operation of the BPS.

Alison Nickells - NiSource - Northern Indiana Public Service Co. - 1	
Answer	No
Document Name	
Comment	
Increasing the frequency of risk assessments, including the R6 requirement for third-party validation causes increase demand on resources. The cost seems disproportionate to the potential benefit.	
Likes 0	
Dislikes 0	

Response
Thank you for the comment. Please see revised Standard. The third party verification was approved by the industry from the previous version. The drafting team balanced concerns regarding the burden on applicable Transmission Owners and the benefits to reliability from identifying and physically protecting those Transmission stations, Transmission substations, and their associated primary control centers that are critical to the reliable and secure operation of the BPS.

Kelley Sargent - Puget Sound Energy, Inc. - 3	
Answer	No
Document Name	
Comment	
It is not clear to us if CIP-014-4 is cost effective to address reliability issue of physical security. Changes introduced in CIP-014-4 with respect to proximity criteria (R1 and R2) may result in additional stations becoming applicable for criticality assessment, thereby potentially increasing costs.	
Likes 0	
Dislikes 0	

Response
Thank you for the comment. Please see the revised Standard. The drafting team balanced concerns regarding the burden on applicable Transmission Owners and the benefits to reliability from identifying and physically protecting those Transmission stations, Transmission substations, and their associated primary control centers that are critical to the reliable and secure operation of the BPS.

Israel Perez - Israel Perez On Behalf of: Laura Somak, Salt River Project, 3, 6, 5, 1; Mathew Weber, Salt River Project, 3, 6, 5, 1; Thomas Johnson, Salt River Project, 3, 6, 5, 1; Timothy Singh, Salt River Project, 3, 6, 5, 1; - Israel Perez	
Answer	No
Document Name	
Comment	

Salt River Project (SRP) agrees with PNM that increasing the frequency of risk assessments, including the R6 requirement for third-party validation causes increase demand on resources. In addition, this would add additional burden on the Transmission Planners and additional resources would need to be allocated to meet the Standard.

Likes 0	
Dislikes 0	

Response

Thank you for the comment. Please see the revised Standard. The drafting team balanced concerns regarding the burden on applicable Transmission Owners and the benefits to reliability from identifying and physically protecting those Transmission stations, Transmission substations, and their associated primary control centers that are critical to the reliable and secure operation of the BPS.

Bob Cardle - Bob Cardle On Behalf of: Marco Rios, Pacific Gas and Electric Company, 3, 1, 5; Sandra Ellis, Pacific Gas and Electric Company, 3, 1, 5; Tyler Brun, Pacific Gas and Electric Company, 3, 1, 5; - Bob Cardle

Answer	No
Document Name	

Comment

We cannot comment on cost effectiveness.

Likes 0	
Dislikes 0	

Response

Thank you.

Brian Millard - Tennessee Valley Authority - 1,3,5,6 - SERC, Group Name TVA RBB

Answer	No
Document Name	

Comment

Likes 0	
Dislikes 0	

Response

Thank you.

Mark Garza - FirstEnergy - FirstEnergy Corporation - 4, Group Name FE Voter

Answer	Yes
Document Name	

Comment

FirstEnergy sees no issues in the cost effectiveness of the proposed CIP-014-4 standard.	
Likes 0	
Dislikes 0	
Response	
Thank you for your support.	
Jodirah Green - ACES Power Marketing - 1,3,4,5,6 - MRO,WECC,Texas RE,SERC,RF, Group Name ACES Collaborators	
Answer	Yes
Document Name	
Comment	
In the confines of, does the updated language cost effectively address the reliability issue of physical security from version to version of CIP-014, we would have to agree.	
Likes 0	
Dislikes 0	
Response	
Thank you for your support.	
Erin Wilson - NB Power Corporation - New Brunswick Power Transmission Corporation - 5	
Answer	Yes
Document Name	
Comment	
Likes 0	
Dislikes 0	
Response	
Thank you for your support.	
Jeffrey Streifling - NB Power Corporation - 1	
Answer	Yes
Document Name	
Comment	
Likes 0	

Dislikes 0	
Response	
Thank you for your support.	
Tamarra Hardie - Tamarra Hardie On Behalf of: Diane E Landry, Public Utility District No. 1 of Chelan County, 3, 5, 1, 6; - Public Utility District No. 1 of Chelan County - 6, Group Name CHPD	
Answer	Yes
Document Name	
Comment	
Likes 0	
Dislikes 0	
Response	
Thank you for your support.	
Matthew Nicklin - Southern Illinois Power Cooperative - 1,3,5 - SERC	
Answer	Yes
Document Name	
Comment	
Likes 0	
Dislikes 0	
Response	
Thank you for your support.	
James Keele - Entergy - 3	
Answer	Yes
Document Name	
Comment	
Likes 0	
Dislikes 0	
Response	
Thank you for your support.	
Ben Hammer - Western Area Power Administration - 1	

Answer	Yes
Document Name	
Comment	
Likes 0	
Dislikes 0	
Response	
Thank you for your support.	
Gary Trezza - Long Island Power Authority - 1 - NPCC	
Answer	Yes
Document Name	
Comment	
Likes 0	
Dislikes 0	
Response	
Thank you for your support.	
Richard Jackson - U.S. Bureau of Reclamation - 1	
Answer	Yes
Document Name	
Comment	
Likes 0	
Dislikes 0	
Response	
Thank you for your support.	
Carver Powers - Utility Services, Inc. - 4	
Answer	Yes
Document Name	
Comment	
Likes 0	

Dislikes 0	
Response	
Thank you for your support.	
Ruida Shu - Northeast Power Coordinating Council - 1,2,3,4,5,6,7,8,9,10 - NPCC, Group Name NPCC RSC	
Answer	Yes
Document Name	
Comment	
Likes 0	
Dislikes 0	
Response	
Thank you for your support.	
Tim Kelley - Tim Kelley On Behalf of: Charles Norton, Sacramento Municipal Utility District, 3, 6, 4, 1, 5; Foung Mua, Sacramento Municipal Utility District, 3, 6, 4, 1, 5; Kevin Smith, Balancing Authority of Northern California, 1; Nicole Looney, Sacramento Municipal Utility District, 3, 6, 4, 1, 5; Ryder Couch, Sacramento Municipal Utility District, 3, 6, 4, 1, 5; Wei Shao, Sacramento Municipal Utility District, 3, 6, 4, 1, 5; - Tim Kelley, Group Name SMUD and BANC	
Answer	Yes
Document Name	
Comment	
Likes 0	
Dislikes 0	
Response	
Thank you for your support.	
Chantal Mazza - Chantal Mazza On Behalf of: Junji Yamaguchi, Hydro-Quebec (HQ), 1, 5; Nicolas Turcotte, Hydro-Quebec (HQ), 1, 5; - Chantal Mazza	
Answer	Yes
Document Name	
Comment	
Likes 0	
Dislikes 0	
Response	
Thank you for your support.	

Andrew Smith - APS - Arizona Public Service Co. - 5	
Answer	Yes
Document Name	
Comment	
Likes 0	
Dislikes 0	
Response	
Thank you for your support.	
Daniel Gacek - Exelon - 1	
Answer	Yes
Document Name	
Comment	
Likes 0	
Dislikes 0	
Response	
Thank you for your support.	
Robert Jones - Seattle City Light - 4	
Answer	Yes
Document Name	
Comment	
Likes 0	
Dislikes 0	
Response	
Thank you for your support.	
Jennie Wike - Jennie Wike On Behalf of: John Merrell, Tacoma Public Utilities (Tacoma, WA), 1, 4, 5, 6, 3; - Jennie Wike, Group Name Tacoma Power	
Answer	Yes
Document Name	
Comment	

Likes 0	
Dislikes 0	
Response	
Thank you for your support.	
Dave Krueger - SERC Reliability Corporation - 10	
Answer	Yes
Document Name	
Comment	
Likes 0	
Dislikes 0	
Response	
Thank you for your support.	
Lidija Efremova - Lidija Efremova On Behalf of: Emma Halilovic, Hydro One Networks, Inc., 1; - Lidija Efremova	
Answer	Yes
Document Name	
Comment	
Likes 0	
Dislikes 0	
Response	
Thank you for your support.	
Scott Langston - Tallahassee Electric (City of Tallahassee, FL) - 1	
Answer	Yes
Document Name	
Comment	
Likes 0	
Dislikes 0	
Response	
Thank you for your support.	

Amy Wilke - American Transmission Company, LLC - 1	
Answer	Yes
Document Name	
Comment	
Likes 0	
Dislikes 0	
Response	
Thank you for your support.	
Kevin Conway - Western Power Pool - 4	
Answer	
Document Name	
Comment	
The SAR states: "The cost impacts for the proposed changes to CIP-014-3 are expected to be minimal. The changes add clarity to the current Standard to bring consistency and clarify expectations for effectively evaluating for instability, uncontrolled separation, and Cascading following a physical attack. The upper limit of cost added to entities is bounded due to no alteration of applicable substations potentially receiving security control upgrades. Rather, the cost incurred will be on the additions of study rigor, which again are anticipated to be relatively minimal." The Drafting team has not provided additional data, and the dynamic and steady-state requirements are outside of the TO's area of responsibility. This requires a TO to access this expertise through contracting or other methods. The Drafting Team has failed to identify how this Standard may further capture additional Facilities, and require entities to take further security mitigations. The Implementation Plan will require entities to reevaluate all of the risk assessment processes sooner that the current 36-month review period, since they will have to be compliant with all Facilities with 24 months of the proposed standard. This proposed standard fails to conduct a cost impact study, and we believe there are significant hidden costs in implementing this proposed standard.	
Likes 0	
Dislikes 0	
Response	
Thank you for your comment. Please see the revised standard. The drafting team balanced concerns regarding the burden on applicable Transmission Owners and the benefits to reliability from identifying and physically protecting those Transmission stations, Transmission substations, and their associated primary control centers that are critical to the reliable and secure operation of the BPS.	
Donna Wood - Tri-State G and T Association, Inc. - 1	
Answer	
Document Name	
Comment	

NA	
Likes 0	
Dislikes 0	
Response	
Thank you for your support.	
Devin Shines - PPL - Louisville Gas and Electric Co. - 1,3,5,6 - SERC,RF	
Answer	
Document Name	
Comment	
The second draft of CIP-014-4 sufficiently addresses many of the issues described in the SAR and provides an appropriate level of detail in the risk assessment requirements. Broadly, the second draft of CIP-014-4 is an improvement on CIP-014-3 and will improve consistency in risk assessment methodology throughout the industry. The cost effectiveness of CIP-014-4 for addressing physical security is difficult to determine, but the improvements over CIP-014-3 are appreciated.	
Likes 0	
Dislikes 0	
Response	
Thank you for your comment. Please see the revised Standard. The drafting team balanced concerns regarding the burden on applicable Transmission Owners and the benefits to reliability from identifying and physically protecting those Transmission stations, Transmission substations, and their associated primary control centers that are critical to the reliable and secure operation of the BPS.	
Kristine Martz - Edison Electric Institute - NA - Not Applicable - NA - Not Applicable	
Answer	
Document Name	
Comment	
EEI does not comment on cost.	
Likes 0	
Dislikes 0	
Response	
Thank you.	
Dwanique Spiller - Berkshire Hathaway - NV Energy - 5	
Answer	
Document Name	

Comment	
NV Energy will not comment to the cost effectiveness of CIP-014-4.	
Likes 0	
Dislikes 0	
Response	
Thank you.	
Nick Leathers - Nick Leathers On Behalf of: David Jendras Sr, Ameren - Ameren Services, 3, 6, 1; - Nick Leathers	
Answer	
Document Name	
Comment	
Ameren has no comment on the cost effectiveness of the project.	
Likes 0	
Dislikes 0	
Response	
Thank you.	
Rachel Schuldt - Black Hills Corporation - 6, Group Name Black Hills Corporation - All Segments	
Answer	
Document Name	
Comment	
Black Hills Corporation will not comment on cost effectiveness.	
Likes 0	
Dislikes 0	
Response	
Thank you.	

8. Provide any additional comments for the standard drafting team to consider, if desired.	
Amy Wilke - American Transmission Company, LLC - 1	
Answer	
Document Name	
Comment	
Overall, ATC can stand behind most of the changes but would like to see updates on Requirement R2 before moving forward. Additionally, please clarify in this standard if TOs and TOPs still need to do a study or assessment on previously qualified facilities if our company's corporate security team has voluntarily determined they were going to implement the highest level of physical security they have for a new or existing site. Does the SDT intend for TOs and TOPs to have to study those sites if they were already going to be classified at that high level of security. If not, this would be a really good exception to note that would save many companies a lot of time and effort.	
Likes 0	
Dislikes 0	
Response	
Thank you for your comment. The language in Requirement R2 to specify the distance between applicable stations has been revised. Language that the TO may forgo additional assessments has been added as Part 5.2 of Requirement R5. The language for Requirement R3 in the Technical Rationale document was updated.	
Bob Cardle - Bob Cardle On Behalf of: Marco Rios, Pacific Gas and Electric Company, 3, 1, 5; Sandra Ellis, Pacific Gas and Electric Company, 3, 1, 5; Tyler Brun, Pacific Gas and Electric Company, 3, 1, 5; - Bob Cardle	
Answer	
Document Name	
Comment	
The CIP-014-4 standard introduces a significant change by requiring the inclusion of stations within a 1/2-mile line of sight or easily accessible from a common roadway. However, the standard lacks clear guidelines for selecting stations. This could lead to inconsistencies and challenges in implementation, as different Transmission Owners and Transmission Operators may interpret and apply the criteria differently. To improve clarity and ensure consistent implementation, the standard should provide more detailed guidance on the selection of stations, including specific criteria for evaluating lines of sight and ease of access from common roadways. This would help Transmission Owners and Transmission Operators to better understand the requirements and apply them consistently, ensuring the reliability and security of the electrical grid.	
Likes 0	
Dislikes 0	
Response	
Thank you for your comment. The language in Requirement R2 to specify the distance between applicable stations has been revised.	
Israel Perez - Israel Perez On Behalf of: Laura Somak, Salt River Project, 3, 6, 5, 1; Mathew Weber, Salt River Project, 3, 6, 5, 1; Thomas Johnson, Salt River Project, 3, 6, 5, 1; Timothy Singh, Salt River Project, 3, 6, 5, 1; - Israel Perez	
Answer	

Document Name	
Comment	
Salt River Project (SRP) agrees with the EEI comment to review the Attachment 1, Criterion 3 reference to IROLs.	
Likes 0	
Dislikes 0	
Response	
Thank you for your comment. Modifications to the Applicability, including revision of language related to Interconnection Reliability Operating Limits (IROLs), are beyond the scope of Project 2023-06. Please also see response to EEI's comments.	
Kelley Sargent - Puget Sound Energy, Inc. - 3	
Answer	
Document Name	
Comment	
It is not clear the type of events CIP-014-4 intends to address that can simultaneously impact 2 or more stations. The standard depends on physical security measures to mitigate such events, however mitigation to the extent may not be feasible nor cost effective.	
Likes 0	
Dislikes 0	
Response	
Thank you for your comment. The language in Requirement R2 to specify the distance between applicable stations has been revised.	
Romel Aquino - Edison International - Southern California Edison Company - 3	
Answer	
Document Name	2023-06 Unofficial_Comment_Form_Draft 2 - Final EEI Comments (1).docx
Comment	
See EEI Comments	
Likes 0	
Dislikes 0	
Response	
Thank you for your comment. Please see response to EEI's comments.	
Jodirah Green - ACES Power Marketing - 1,3,4,5,6 - MRO,WECC,Texas RE,SERC,RF, Group Name ACES Collaborators	
Answer	
Document Name	

Comment
We would like to thank the SDT for it's hard work and allowing us to provide feedback.

Likes 0	
Dislikes 0	

Response
Thank you for your comment and support.

Ellese Murphy - Ellese Murphy On Behalf of: Katherine Street, Duke Energy , 5, 6, 1, 1; - Ellese Murphy	
Answer	
Document Name	

Comment
Duke Energy thanks the Drafting team for their work on the revisions and for incorporating stakeholder feedback from Draft 1 into Draft 2.

Likes 0	
Dislikes 0	

Response
Thank you for your comment and support.

Gail Elliott - Gail Elliott On Behalf of: Michael Moltane, International Transmission Company Holdings Corporation, 1; - Gail Elliott	
Answer	
Document Name	

Comment
ITC is concerned that the proposed CIP-014-4, Attachment 1, Criterion 3 does not align with revisions to FAC-014-3 that became effective on April 1, 2024, which places the responsibility for establishing Interconnection Reliability Operating Limits (IROLs) for its Reliability Coordinator Area with the Reliability Coordinator in accordance with its system operating Limit methodology (SOL methodology). We suggest the revision below: 3.Facilities at a single station or substation location that are identified by its Reliability Coordinator as critical to the derivation of Interconnection Reliability Operating Limits (IROLs) and their associated contingencies.

Likes 0	
Dislikes 0	

Response
Thank you for your comment. The DT recognized the discrepancy between this project and FAC-014-3. There is a new project (SAR has been approved) under CIP-002 to fix this particular issue (CIP-014 is part of that project).

Jennifer Mcnally - Duke Energy - 1,3,5,6 - Texas RE,SERC,RF	
Answer	

Document Name	
Comment	
Duke Energy thanks the Drafting team for their work on the revisions and for incorporating stakeholder feedback from Draft 1 into Draft 2.	
Likes 0	
Dislikes 0	
Response	
Thank you for your comment and support.	
Lidija Efremova - Lidija Efremova On Behalf of: Emma Halilovic, Hydro One Networks, Inc., 1; - Lidija Efremova	
Answer	
Document Name	
Comment	
Can the standard also provide a process diagram showing activities (at least for the Risk Assessment portion) alongside a time scale which would help to show the overlap of frequency of report (start to start) overlapping with how far the study should look out for facilities to be in-service. This has been a source of confusion in the industry and although was not required in the SAR, will help to clarify many misunderstandings.	
Likes 0	
Dislikes 0	
Response	
Thank you for your comment. A process diagram has been developed and added to the Technical Rationale document.	
Jamison Cawley - Nebraska Public Power District - 1	
Answer	
Document Name	
Comment	
Please provide clarification if “Line” includes long bus transformer connections between substations. Consider adding clarification or examples to the rationale as well. The example figure on Page 6 in the technical rationale highlights the 230kV line but does not indicate the status of the generation ties as included or excluded, nor does it show any tie transmission examples. Consider adding more detail and discussion for this figure.	
Likes 0	
Dislikes 0	
Response	
Thank you for your comment. The DT believes that criteria in the Attachment 1 is sufficiently clear, and specifically for part 2 of Attachment 1 that all lines should be counted unless terminating at a collecting bus.	
Dave Krueger - SERC Reliability Corporation - 10	

Answer	
Document Name	
Comment	

SERC appreciates the ongoing efforts to refine the CIP-014 Risk Assessment portion of the standard. With the revisions to R1-R3, it is unclear how SAR Scope item #2 “Clarify the case(s) used for the risk assessment to be tailored to the Requirement R1 in-service window and correct any discrepancies between the study period, frequency of study, and the base case(s) a Transmission Owner uses.” Is being addressed, in order to insure high accuracy and fidelity to actual planned system conditions within the 36 month time period are addressed.

Likes 0	
Dislikes 0	
Response	

Thank you for your comment. In accordance with Requirement R1, each Transmission Owner shall at least once every 36 calendar months document existing or planned to be in service within 36 calendar months Transmission stations and Transmission substations. In accordance with Requirement R5, each Transmission Owner shall perform a risk assessment at least once every 36 calendar months. Requirement R3 Part 3.2 has been revised to provide additional clarity related to the base cases.

Alan Kloster - Alan Kloster On Behalf of: Jeremy Harris, Evergy, 3, 5, 1, 6; Kevin Frick, Evergy, 3, 5, 1, 6; Marcus Moor, Evergy, 3, 5, 1, 6; Tiffany Lake, Evergy, 3, 5, 1, 6; - Alan Kloster

Answer	
Document Name	
Comment	

Evergy supports and incorporates by reference the comments of the Edison Electric Institute for question #8.

Likes 0	
Dislikes 0	
Response	

Thank you for your comment. Please see response to EEI’s comments.

Richard Vendetti - NextEra Energy - 5

Answer	
Document Name	
Comment	

NextEra supports the comments provided by EEI below:

EEI is concerned that the proposed CIP-014-4, Attachment 1, Criterion 3 does not align with revisions to FAC-014-3 that became effective on April 1, 2024, which places the responsibility for establishing Interconnection Reliability Operating Limits (IROLs) for its Reliability Coordinator Area with the Reliability Coordinator in accordance with its system operating Limit methodology (SOL methodology). We suggest the revision below:

}3. Facilities at a single station or substation location that are identified by its Reliability Coordinator, Planning Coordinator, or Transmission Planner as critical to the derivation of Interconnection Reliability Operating Limits (IROLs) and their associated contingencies.

Likes 0	
Dislikes 0	

Response

Thank you for your comment. Please see response to EEI's comments.

Stefanie Burke - Portland General Electric Co. - 6

Answer	
Document Name	

Comment

PGE supports the comments of EEI.

Likes 0	
Dislikes 0	

Response

Thank you for your comment. Please see response to EEI's comments.

Robert Jones - Seattle City Light - 4

Answer	
Document Name	

Comment

To reiterate my comment from R3... we have experienced disagreement with regulators about what type of physical attack we are supposed to be simulating. The regulators we spoke with expected a severe "smoking crater" scenario, but our physical security personnel suggested looking at what the most likely scenarios would be (i.e. things seen in previous incidents). The standard provides no guidance here and leaves the choice of scenarios up to us. The type of attack to expect is not something that seems like it would vary by utility, so it makes sense that the standard would specify this rather than leaving it up to individual entities to determine. Some guidance in the standard would help clear up the ambiguity so that we can choose appropriate contingencies to run and avoid friction with regulators.

Likes 0	
Dislikes 0	

Response

Thank you for your comment. Please see response to Question #3.

Dwanique Spiller - Berkshire Hathaway - NV Energy - 5

Answer	

Document Name	
Comment	

NV Energy thanks the drafting team for their responsiveness to industry comments on the initial draft.

Attachment 1 clarify if “Line” also includes long bus transformer connections between substations? Consider adding clarification or examples to the rationale as well. The example figure on page 6 in the technical rationale highlights the 230kV transmission lines but does not indicate the status of the generation ties as included or excluded or show any transmission tie transformer examples. Consider adding more details and discussion for this figure.

Likes 0	
Dislikes 0	
Response	

Thank you for your comment. Line in Attachment 1 – Applicability Criteria refers to BES Transmission Lines.

Kristine Martz - Edison Electric Institute - NA - Not Applicable - NA - Not Applicable

Answer	
Document Name	
Comment	

EEI is concerned that the proposed CIP-014-4, Attachment 1, Criterion 3 does not align with revisions to FAC-014-3 that became effective on April 1, 2024, which places the responsibility for establishing Interconnection Reliability Operating Limits (IROLs) for its Reliability Coordinator Area with the Reliability Coordinator in accordance with its system operating Limit methodology (SOL methodology). We suggest the revision below:

3. Facilities at a single station or substation location that are identified by its Reliability Coordinator as critical to the derivation of Interconnection Reliability Operating Limits (IROLs) and their associated contingencies.

Likes 0	
Dislikes 0	
Response	

Thank you for your comment. The DT recognized the discrepancy between this project and FAC-014-3. There is a new project (SAR has been approved) under CIP-002 to fix this particular issue (CIP-014 is part of that project).

Daniel Gacek - Exelon - 1

Answer	
Document Name	
Comment	

Exelon agrees with the EEI comment to review the Attachment 1, Criterion 3 reference to IROLs. Project 2015-09 made changes to the determination of IROLs that may impact the use if IROL in CIP-014.

Exelon suggests the drafting team initiate edits to the CMEP Practice Guide for CIP-014 to align the practice guide with the expansion of the R1 into R1 to R5.

Submitted on behalf of Exelon - Segments 1 & 3	
Likes 0	
Dislikes 0	

Response

Thank you for your comment. Modifications to the Applicability, including revision of language related to Interconnection Reliability Operating Limits (IROLs), are beyond the scope of Project 2023-06. Please also see response to EEI's comments. CMEP Practice Guides are developed solely by the ERO Enterprise. This information has passed onto NERC Compliance Group.

Andrew Smith - APS - Arizona Public Service Co. - 5

Answer	
Document Name	

Comment

AZPS appreciates the clarifications included by the DT in this draft, however continues to seek additional clarifications regarding entity responsibilities or exclusion of responsibilities for non-owned/operated stations/substations within proximity of identified locations. For example, the relationship and requirements between Transmission Owners and Transmission Operators when adjacent facilities are involved is not clear. The Transmission Owner and Transmission Operator can be different entities and R8 states the notification is made to the adjacent Transmission Operator. The Transmission Owner performing the assessment and identifying the facilities in R5 will be subject to doing the Physical assessments and protection, however it is not clear how the Transmission Owner of the adjacent facility is notified and what, if any, requirements they have.

Likes 0	
Dislikes 0	

Response

Thank you for your comment. The language in Requirement R2 to specify the distance between applicable stations has been revised. Changes to existing Requirements R4 through R6, in CIP-014-3, is beyond the scope of Project 2023-06.

Lucinda Bradshaw - Lucinda Bradshaw On Behalf of: Byron Booker, Oncor Electric Delivery, 1; - Lucinda Bradshaw

Answer	
Document Name	

Comment

N/A

Likes 0	
Dislikes 0	

Response

Thank you for your support.

Chantal Mazza - Chantal Mazza On Behalf of: Junji Yamaguchi, Hydro-Quebec (HQ), 1, 5; Nicolas Turcotte, Hydro-Quebec (HQ), 1, 5; - Chantal Mazza

Answer	

Document Name	
Comment	
We suggest adding triggers or process diagram similar to PRC-004 for required actions if ownership changes. **R6.3:** Request R6.3 allow for 90 days instead of 60 so proper work can be completed. With a more detailed analysis being required, there is a higher chance of disagreement with our third party reviewer, requiring more time needed for response.	
Likes 0	
Dislikes 0	
Response	
Thank you for your comment. Please see a flowchart at the end of the Technical Rationale document. Changes to, in CIP-014-3, existing Requirements R4 through R6 is beyond the scope of Project 2023-06.	
Diana Aguas - CenterPoint Energy Houston Electric, LLC - 1 - Texas RE	
Answer	
Document Name	
Comment	
There is a typo in R8 Section 8.3. “Electricity Sector Information Sharing and Analysis Center (ES-ISAC)” should say “Electricity Information Sharing and Analysis Center (E-ISAC)”.	
Likes 0	
Dislikes 0	
Response	
Thank you for your comment. While changes to CIP-014-3, existing Requirements R4 through R6 is beyond the scope of Project 2023-06, the typo of E-ISAC in Requirement R8 Part 8.3 has been corrected.	
Clay Walker - Clay Walker On Behalf of: Robert Hirchak, Cleco Corporation, 6, 5, 1, 3; - Clay Walker	
Answer	
Document Name	
Comment	
Cleco agrees with EEI comments.	
Likes 0	
Dislikes 0	
Response	
Thank you for your comment. Please see response to EEI’s comments.	

Stephen Stafford - Stephen Stafford On Behalf of: Greg Davis, Georgia Transmission Corporation, 1; - Stephen Stafford	
Answer	
Document Name	
Comment	

The primary issue with this standard as it is written, and as this draft continues is the application of requirements/expectations appropriate for the Transmission Planner/Planning Coordinator function to the Transmission Owner instead. This reduces clarity on the types of studies to be performed to assess the extreme events identified in this standard.

Regarding R6:

With an attempt at clarifying study criteria, though they should be applied to the appropriate planning entity, there is no reason to maintain a requirement for an unaffiliated third party to perform a verification of a transmission planning analysis associated with the risk assessment. Instead of requiring planning entities be the third-party verifier, they should just perform the study under clearly defined requirements in a TPL standard and communicate this information to the Transmission Owner. It is also important to note the third party verifying the risk assessment for this physical security standard is not required to have expertise in that area according to this requirement. Additionally, the SDT should consider removing the Reliability Coordinator as a potential third-party verifier as that function does not perform the type of analysis being sought in this standard.

Additional Comment:

The analysis outlined in the CIP-014 standard is an evaluation of an extreme event and is based on transmission planning analysis. Currently, the existing TPL-001 standard requires the evaluation of extreme events, though, it is not specific to this particular substation outage analysis and corrective actions are not required for these events. Additionally, there are ongoing efforts to establish a separate standard to address the long-term planning analysis around extreme weather events. It would seem NERC and the industry are potentially missing an opportunity to consolidate requirements around the evaluation of extreme events better than what is currently provided for in the current construct of the existing and planned Reliability Standards. Consideration should be given by NERC to provide a better pathway to house long-term planning requirements around extreme event analysis within the TPL standards (not CIP) and specify the reliability analyses needed, the parameters for determining reliability, expectations for corrective actions, and the communication path from planning to owners and others with a reliability-related need for this information. The planning assessment/CAP required by TPL-001 is already required to be distributed to applicable owners. Clarifying the extreme event expectations in TPL-001 to specify the substation outage alluded to in CIP-014 is one pathway to better align standard requirements with the appropriate entity.

Likes 0	
Dislikes 0	
Response	

Thank you for your comment. The Standard Authorization Request (SAR), which defines the scope of work for the Project 2023-06 Drafting Team (DT) only lists Transmission Owners and Transmission Operators as Functional Entities to which the proposed standard should apply. Changes to existing Requirements R4 through R6, in CIP-014-3, is beyond the scope of Project 2023-06.

Ruida Shu - Northeast Power Coordinating Council - 1,2,3,4,5,6,7,8,9,10 - NPCC, Group Name NPCC RSC	
Answer	
Document Name	
Comment	

We suggest adding triggers or process diagram similar to PRC-004 for required actions if ownership changes.

R6.3: Request R6.3 allow for 90 days instead of 60 so proper work can be completed. With a more detailed analysis being required, there is a higher chance of disagreement with our third party reviewer, requiring more time needed for response.

Likes 0	
Dislikes 0	

Response

Thank you for your comment. Please see a flowchart at the end of the Technical Rationale document. Changes to, in CIP-014-3, existing Requirements R4 through R6 is beyond the scope of Project 2023-06.

Amy Wesselkamper - PNM Resources - Public Service Company of New Mexico - 3

Answer	
Document Name	

Comment

PNM and TNMP support EEI comments.

Likes 0	
Dislikes 0	

Response

Thank you for your comment. Please see response to EEI's comments.

Matt Carden - Southern Company - Southern Company Services, Inc. - 1

Answer	
Document Name	

Comment

Southern Company recommends swapping Requirement R3 and R4 chronologically. This follows a more logical approach of identifying the stations and responsibilities to perform the assessment in the first three requirements followed by an assessment methodology in R4 and the performance of an assessment in R5.

Southern Company recommends removing Requirement R6. With the understanding that this is not explicitly in scope of the current SAR, the added specificity of the proposed standard eliminates the reliability benefit of the third-party verifier. Additionally, based on a previous audit of CIP-014-3, Southern Company did not observe the Regional Entity take into consideration the review by the R2 third party verifier. If this is consistent across other Regional Entities, then an elimination of CIP-014-4 R6 may be appropriate due to the extra cost and the lack of a reliability benefit.

Likes 0	
Dislikes 0	

Response

Thank you for your comment. While Requirement R3 and R4 were not swapped, they are re-worded in the latest draft CIP-014-4. Changes to, in CIP-014-3, existing Requirements R4 through R6, i.e., R6 in the draft CIP-014-4, is beyond the scope of Project 2023-06.

Devin Shines - PPL - Louisville Gas and Electric Co. - 1,3,5,6 - SERC,RF

Answer	
Document Name	
Comment	
LG&E/KU greatly appreciate the drafting team's willingness and effort to address concerns with the previous draft is greatly appreciated. The second draft makes substantial improvements while also accomplishing the objectives outlined in the SAR. While there are certain components of the standard that may be clarified and improved upon, the most crucial issues have been resolved.	
Likes 0	
Dislikes 0	
Response	
Thank you for your comment.	
Donna Wood - Tri-State G and T Association, Inc. - 1	
Answer	
Document Name	
Comment	
NA	
Likes 0	
Dislikes 0	
Response	
Thank you for your support.	
Rebika Yitna - Rebika Yitna On Behalf of: Roger Brand, MEAG Power, 3, 1; - Rebika Yitna	
Answer	
Document Name	
Comment	
No additional comments	
Likes 0	
Dislikes 0	
Response	
Thank you for your support.	
Ben Hammer - Western Area Power Administration - 1	

Answer	
Document Name	
Comment	

WAPA recommends the SDT remove the third party verification Requirement R6. WAPA is concerned that this requirement holds an entity responsible for the actions of another organization, and creates the risk of non-compliances when a separate reviewer fails to complete their work on time.

While this elimination is not explicitly mentioned in the SAR, it is directly tied to the changes proposed in the SAR. The purpose of the third party verification goes away with the increased prescriptiveness of the risk assessment being made in the drafts of CIP-014-4. In addition, since the SAR indicates that industry was not implementing a consistent approach to the risk assessments, then that indicates the third party verifications were also proving to be of little value. This independent verification is a burdensome and costly endeavor that has not proven to be value-added. Planning this task with eligible vendors requires significant work to coordinate and thousands of dollars to complete. Given that the verifications exist solely to offer feedback on an approach which will no longer be required with the increased specificity in R3, then their removal would eliminate what has become an unnecessary administrative burden.

Likes 0	
Dislikes 0	
Response	

Thank you for your comment. Changes to, in CIP-014-3, existing Requirements R4 through R6, i.e., R6 in the draft CIP-014-4, is beyond the scope of Project 2023-06.

Mark Garza - FirstEnergy - FirstEnergy Corporation - 4, Group Name FE Voter

Answer	
Document Name	
Comment	

No additional comments.

Likes 0	
Dislikes 0	
Response	

Thank you for your support.

Leshel Hutchings - AEP - 3

Answer	
Document Name	
Comment	

AEP's Additional Comments:

1. There is a typo in R8 Section 8.3 which could be corrected in this revision. "Electricity Sector Information Sharing and Analysis Center (ES-ISAC)" should say "Electricity Information Sharing and Analysis Center (E-ISAC)".
2. The level in the VRF/VSL justification does not match the VRF/VSL levels in the standard draft for R2 and R3 – these need to be aligned.

Likes 0	
Dislikes 0	

Response

Thank you for your comment.

1. The typo of E-ISAC in Requirement R8 Part 8.3 has been corrected.
2. This has been verified and the current revision should be correct.

Nikki Carson-Marquis - Nikki Carson-Marquis On Behalf of: Theresa Allard, Minnkota Power Cooperative Inc., 1; - Nikki Carson-Marquis

Answer	
Document Name	

Comment

MPC thanks the drafting team for their consideration and appreciates the opportunity to comment.

Likes 0	
Dislikes 0	

Response

Thank you for your comment.

Ronald Hoover - Bonneville Power Administration - 1,3,5,6 - WECC

Answer	
Document Name	

Comment

BPA recognizes significant improvements with the current draft. With the exception of a few areas of clarity being needed, BPA believes we are on track to meet current NERC and FERC guidelines.

Likes 0	
Dislikes 0	

Response

Thank you for your comment.

Joshua London - Eversource Energy - 1, Group Name Eversource

Answer	
Document Name	

Comment

R6.3: Eversource requests R6.3 allow for 90 days instead of 60 so proper work can be completed. With a more detailed analysis being required, there is a higher chance of disagreement with our third party reviewer, requiring more time needed for response.

Overall, Eversource appreciates the efforts of the drafting team and overall is in agreement with the current draft. Eversource's concerns of the use of the phrase "planned to be in service" in R1 is the only portion of the updated standard keeping the company from being in favor.

Likes 0	
Dislikes 0	

Response

Thank you for your comment. Changes to, in CIP-014-3, existing Requirements R4 through R6, i.e., R6 in the draft CIP-014-4, is beyond the scope of Project 2023-06. The language in Requirement R1 has been revised to provide additional clarity.

Matthew Nicklin - Southern Illinois Power Cooperative - 1,3,5 - SERC

Answer	
Document Name	

Comment

We would like to thank the SDT for it's hard work and allowing us to provide feedback.

Likes 0	
Dislikes 0	

Response

Thank you for your comment.

Jeffrey Streifling - NB Power Corporation - 1

Answer	
Document Name	

Comment

We suggest adding triggers or process diagram similar to PRC-004 for required actions if ownership changes.

Likes 0	
Dislikes 0	

Response

Thank you for your comment. Please see a flowchart at the end of the Technical Rationale document.

Erin Wilson - NB Power Corporation - New Brunswick Power Transmission Corporation - 5

Answer	

Document Name	
Comment	
We suggest adding triggers or process diagram similar to PRC-004 for required actions if ownership changes.	
Likes 0	
Dislikes 0	
Response	
Thank you for your comment. Please see a flowchart at the end of the Technical Rationale document.	
Brian Millard - Tennessee Valley Authority - 1,3,5,6 - SERC, Group Name TVA RBB	
Answer	
Document Name	
Comment	
N/A	
Likes 0	
Dislikes 0	
Response	
Kevin Conway - Western Power Pool - 4	
Answer	
Document Name	
Comment	
The Drafting Team's survey should be rethought going forward. Simple asking for a response that a requirement meets the SAR is lazy and requires the respondent to search the SAR for where the individual requirement may fit. The Drafting Team is encouraged to identify and map where a requirement is addressing each issue in the SAR. This will allow the respondent to provide much more specific feedback. As in other standards that have specific applicability, all TOs should have to meet the R1 requirement every 36 months. They would then be able to determine their applicability to the other requirements if they meet the threshold. TO's do not have transmission planning resources, and requirements that require the entity to do transmission studies, should be assigned to Transmission Planners or Planning Coordinators. If this is not done, the results of the effects of losing one or more transmission Facilities will be inconsistent and potentially could conflict with TPL-001 results.	
Likes 0	
Dislikes 0	
Response	

Thank you for your comment. References to applicable item(s) in the SAR has been added to each ‘Rationale for Requirement’ in the Technical Rationale document. The Standard Authorization Request (SAR), which defines the scope of work for the Project 2023-06 Drafting Team (DT) only lists Transmission Owners and Transmission Operators as Functional Entities to which the proposed standard should apply.

Standard Development Timeline

This section is maintained by the drafting team during the development of the standard and will be removed when the standard is adopted by the NERC Board of Trustees (Board).

Description of Current Draft

CIP-014-4 is posted for a 45-day formal comment period with additional ballot.

Completed Actions	Date
Standards Committee approved Standard Authorization Request (SAR) for posting	June 21, 2023
SAR posted for comment	July 26, 2023 – August 24, 2023
Accepted Revised SAR	January 17, 2024
45-day formal or informal comment period with ballot	May 20, 2024 – July 3, 2024
45-day formal or informal comment period with additional ballot	September 23, 2024 – November 6, 2024

Anticipated Actions	Date
45-day formal comment period with additional ballot	June 6, 2025 – July 21, 2025
10-day final ballot	August 11, 2025 – August 20, 2025
Board adoption	February 11, 2026

New or Modified Term(s) Used in NERC Reliability Standards

This section includes all new or modified terms used in the proposed standard that will be included in the *Glossary of Terms Used in NERC Reliability Standards* upon applicable regulatory approval. Terms used in the proposed standard that are already defined and are not being modified can be found in the *Glossary of Terms Used in NERC Reliability Standards*. The new or revised terms listed below will be presented for approval along with the proposed standard. Upon Board adoption, this section will be removed.

Term(s):

None.

A. Introduction

1. **Title:** Physical Security

2. **Number:** CIP-014-4

3. **Purpose:** To identify and protect Transmission stations and Transmission substations, and their associated primary control centers, that if rendered inoperable or damaged due to a physical attack, could cause instability, uncontrolled separation, or Cascading within an Interconnection.

4. **Applicability:**

   4.1. Functional Entities:

   4.1.1. Transmission Owner that owns or jointly owns one or more Transmission stations or Transmission substations that meet the applicability criteria of Attachment 1.

   4.1.2. Transmission Operator

   Exemption: Facilities in a "protected area," as defined in 10 C.F.R. § 73.2, within the scope of a security plan approved or accepted by the Nuclear Regulatory Commission (NRC) are not subject to this Standard; or Facilities within the scope of a security plan approved or accepted by the Canadian Nuclear Safety Commission are not subject to this Reliability Standard.

5. **Effective Date:** See Implementation Plan for CIP-014-4.

B. Requirements and Measures

R1. Each Transmission Owner, at least once every 36 calendar months, shall identify each applicable Transmission station and Transmission substation meeting any of the criteria in Attachment 1 that is either existing or planned to be in service within 36 calendar months. *[Violation Risk Factor: High; Time-Horizon: Long-term Planning]*

M1. Examples of evidence may include, but are not limited to, dated written or electronic documentation of the Transmission station(s) and Transmission substation(s) (existing and those planned to be in service within 36 calendar months) that meet any of the criteria in Attachment 1.

R2. Each Transmission Owner shall identify proximate Transmission station(s) and Transmission substation(s), irrespective of ownership, within 1500 feet or 457 meters (the shortest distance, measured substation fence line to substation fence line) of an applicable Transmission station or Transmission substation identified in Requirement R1. *[Violation Risk Factor: Medium; Time-Horizon: Long-term Planning]*

M2. Examples of evidence may include, but are not limited to, dated written or electronic documentation of the Transmission stations or Transmission substations determined in Requirement R2.

R3. Each Transmission Owner shall have a documented risk assessment methodology for evaluating the loss of each applicable Transmission station or Transmission substation identified in Requirement R1. The methodology shall include, at a minimum, the following: *[Violation Risk Factor: High; Time-Horizon: Long-term Planning]*

3.1. Documented criteria for assessing instability, uncontrolled separation, or Cascading within an Interconnection. The criteria shall include, at a minimum, thresholds identifying unacceptable generation and load loss within an Interconnection.

3.2. A provision that steady-state and dynamic simulations shall each be performed using a System peak Load case and a System Off-Peak Load case.

3.3. A specification for Fault simulations, including:

- For each applicable Transmission station or Transmission substation listed in accordance with Requirement R1, a Fault at the applicable Transmission station or Transmission substation.
- For each Transmission station or Transmission substation determined in accordance with Requirement R2 as being in proximity to an applicable Transmission station or Transmission substation, Faults at both the applicable and proximate Transmission station(s) or Transmission substation(s).

3.4. A specification that Fault simulations assume the loss of communication and Protection Systems at the applicable Transmission station(s) or Transmission

substation(s) prior to or simultaneous with the Fault(s) studied under Requirement R3, Parts 3.3.1 and 3.3.2.

- Removal of all Elements that Protection Systems and other controls are expected to automatically disconnect for each event.
- Delayed (remote) clearing times shall be used unless otherwise technically substantiated.
- Actual or more conservative clearing times shall be used unless otherwise technically substantiated.

M3. Each Transmission Owner shall provide dated evidence, such as electronic or hard copies, of a risk assessment methodology satisfying Requirement R3.

R4. Each Transmission Owner with applicable Transmission station(s) and Transmission substation(s) identified in Requirement R1 containing Bulk Electric System (BES) Elements owned by multiple Transmission Owners shall coordinate with each appropriate Transmission Owner(s) to determine and document their individual and joint responsibilities for documenting a risk assessment methodology under Requirement R3 and for performing any required risk assessments per Requirement R5. *[Violation Risk Factor: Medium; Time-Horizon: Operations Planning, Long-term Planning]*

M4. Examples of acceptable evidence may include, but are not limited to, dated documentation, such as meeting minutes, agreements, and email correspondence, that identifies that agreement has been reached on individual and joint responsibilities for performing the required risk assessments.

R5. At least once every 36 calendar months, each Transmission Owner shall perform a risk assessment to identify applicable Transmission station(s) and Transmission substation(s) identified in Requirement R1, that if rendered inoperable or damaged could result in instability, uncontrolled separation, or Cascading within an Interconnection, using the methodology established in Requirement R3, including any Transmission station(s) and Transmission substation(s) identified in accordance with Requirement R4. If proximate Transmission station(s) and Transmission substation(s) were identified in Requirement R2, they should also be included in the risk assessment. *[Violation Risk Factor: High; Time-Horizon: Operations Planning, Long-term Planning]*

5.1. During the current risk assessment, a Transmission station or Transmission substation identified in either the dynamic or steady-state simulation as causing instability, uncontrolled separation, or Cascading within an Interconnection when rendered inoperable or damaged requires no further simulation.

5.2. If a previous risk assessment has identified a Transmission station or Transmission substation as causing instability, uncontrolled separation, or

Cascading within an Interconnection when rendered inoperable or damaged, then the Transmission Owner may forgo additional assessments on that Transmission station or Transmission substation. Requirement R5, Part 5.3 and Requirement R7 through Requirement R10 still apply to that Transmission station or Transmission substation until a new risk assessment demonstrates otherwise.

5.3. The Transmission Owner shall identify the primary control center that operationally controls each Transmission station or Transmission substation identified as causing instability, uncontrolled separation, or Cascading within an Interconnection when rendered inoperable or damaged in the Requirement R5 risk assessment.

M5. Examples of acceptable evidence may include, but are not limited to, dated written or electronic documentation of the risk assessment satisfying Requirement R5 including the identified Transmission station(s) or Transmission substation(s). For Requirement R5, Part 5.3, examples of acceptable evidence may include, but are not limited to, dated written or electronic documentation of the identification of the primary control center that operationally controls each identified Transmission station or Transmission substation.

R6. Each Transmission Owner shall have an unaffiliated third party verify the risk assessment performed under Requirement R5. The verification may occur concurrently with or after the risk assessment performed under Requirement R5. *[Violation Risk Factor: Medium; Time-Horizon: Long-term Planning]*

6.1. Each Transmission Owner shall select an unaffiliated verifying entity that is either:

- A registered Planning Coordinator, Transmission Planner, or Reliability Coordinator; or
- An entity that has transmission planning or analysis experience.

6.2. The unaffiliated third-party verification shall verify the Transmission Owner's risk assessment performed under Requirement R5, which may include recommendations for the addition or deletion of a Transmission station(s) or Transmission substation(s). The Transmission Owner shall ensure the verification is completed within 90 calendar days following the completion of the Requirement R5 risk assessment.

6.3. If the unaffiliated verifying entity recommends that the Transmission Owner add a Transmission station(s) or Transmission substation(s) to, or remove a Transmission station or Transmission substation from, its identification under Requirement R5, the Transmission Owner shall either, within 60 calendar days of completion of the verification, for each recommended addition or removal of a Transmission station or Transmission substation:

- Modify its identification under Requirement R5 consistent with the recommendation; or
- Document the technical basis for not modifying the identification in accordance with the recommendation.

6.4. Each Transmission Owner shall implement procedures, such as the use of non-disclosure agreements, for protecting sensitive or confidential information made available to the unaffiliated third-party verifier and to protect or exempt sensitive or confidential information developed pursuant to this Reliability Standard from public disclosure.

M6. Examples of acceptable evidence may include, but are not limited to, dated written or electronic documentation that the Transmission Owner completed an unaffiliated third party verification of the Requirement R5 risk assessment and satisfied all of the applicable provisions of Requirement R6, including, if applicable, documenting the technical basis for not modifying the identification in Requirements R1, R2, R3, R4, and R5 as specified under Part 6.3. Additionally, examples of evidence may include, but are not limited to, written or electronic documentation of procedures to protect information under Part 6.4.

R7. For a primary control center(s) identified by the Transmission Owner according to Requirement R5, Part 5.2 that a) operationally controls an identified Transmission station or Transmission substation verified according to Requirement R6, and b) is not under the operational control of the Transmission Owner: the Transmission Owner shall, within seven calendar days following completion of Requirement R6, notify the Transmission Operator that has operational control of the primary control center of such identification and the date of completion of Requirement R6. *[Violation Risk Factor: Lower; Time-Horizon: Long-term Planning]*

7.1. If a Transmission station or Transmission substation previously identified under Requirements R1, R2, R3, R4, and R5 and verified according to Requirement R6 is removed from the identification during a subsequent risk assessment performed according to Requirement R5 or a verification according to Requirement R6, then the Transmission Owner shall, within seven calendar days following the verification or the subsequent risk assessment, notify the Transmission Operator that has operational control of the primary control center of the removal.

M7. Examples of acceptable evidence may include, but are not limited to, written or electronic notifications or communications that the Transmission Owner notified each Transmission Operator, as applicable, according to Requirement R7.

R8. Each Transmission Owner that identified a Transmission station, Transmission substation, or a primary control center in Requirement R5 and verified according to Requirement R6, and each Transmission Operator notified by a Transmission Owner according to Requirement R7, shall conduct an evaluation of the potential threats and vulnerabilities of a physical attack to each of their respective Transmission station(s), Transmission substation(s), and primary control center(s) identified in Requirement

R5 and verified according to Requirement R6. The evaluation shall consider the following: *[Violation Risk Factor: Medium; Time-Horizon: Operations Planning, Long-term Planning]*

8.1. Unique characteristics of the identified and verified Transmission station(s), Transmission substation(s), and primary control center(s);

8.2. Prior history of attack(s) on similar facilities taking into account the frequency, geographic proximity, and severity of past physical security related events; and

8.3. Intelligence or threat warnings received from sources such as law enforcement, the Electric Reliability Organization (ERO), the Electricity Sector Information Sharing and Analysis Center (E-ISAC), U.S. federal and/or Canadian governmental agencies, or their successors.

M8. Examples of evidence may include, but are not limited to, dated written or electronic documentation that the Transmission Owner or Transmission Operator conducted an evaluation of the potential threats and vulnerabilities of a physical attack to their respective Transmission station(s), Transmission substation(s), and primary control center(s) as specified in Requirement R8.

R9. Each Transmission Owner that identified a Transmission station, Transmission substation, or primary control center in Requirement R5 and verified according to Requirement R6, and each Transmission Operator notified by a Transmission Owner according to Requirement R7, shall develop and implement a documented physical security plan(s) that covers their respective Transmission station(s), Transmission substation(s), and primary control center(s). The physical security plan(s) shall be developed within 120 calendar days following the completion of Requirement R6 and executed according to the timeline specified in the physical security plan(s). The physical security plan(s) shall include the following attributes: [*Violation Risk Factor*: *High; Time-Horizon: Long-term Planning*]

9.1. Resiliency or security measures designed collectively to deter, detect, delay, assess, communicate, and respond to potential physical threats and vulnerabilities identified during the evaluation conducted in Requirement R8.

9.2. Law enforcement contact and coordination information.

9.3. A timeline for executing the physical security enhancements and modifications specified in the physical security plan.

9.4. Provisions to evaluate evolving physical threats, and their corresponding security measures, to the Transmission station(s), Transmission substation(s), or primary control center(s).

M9. Examples of evidence may include, but are not limited to, dated written or electronic documentation of its physical security plan(s) that covers their respective identified and verified Transmission station(s), Transmission substation(s), and primary control center(s) as specified in Requirement R6, and additional evidence demonstrating

execution of the physical security plan according to the timeline specified in the physical security plan.

R10. Each Transmission Owner that identified a Transmission station, Transmission substation, or primary control center in Requirement R5 and verified according to Requirement R6, and each Transmission Operator notified by a Transmission Owner according to Requirement R7, shall have an unaffiliated third party review the evaluation performed under Requirement R8 and the security plan(s) developed under Requirement R9. The review may occur concurrently with or after completion of the evaluation performed under Requirement R8 and the security plan development under Requirement R9. *[Violation Risk Factor: Medium; Time-Horizon: Long-term Planning]*

10.1. Each Transmission Owner and Transmission Operator shall select an unaffiliated third-party reviewer from the following:

- An entity or organization with electric industry physical security experience and whose review staff has at least one member who holds either a Certified Protection Professional (CPP) or Physical Security Professional (PSP) certification;
- An entity or organization approved by the ERO;
- A governmental agency with physical security expertise; or
- An entity or organization with demonstrated law enforcement, government, or military physical security expertise.

10.2. The Transmission Owner or Transmission Operator, respectively, shall ensure that the unaffiliated third-party review is completed within 90 calendar days of completing the security plan(s) developed in Requirement R9. The unaffiliated third-party review may, but is not required to, include recommended changes to the evaluation performed under Requirement R8 or the security plan(s) developed under Requirement R9.

10.3. If the unaffiliated third-party reviewer recommends changes to the evaluation performed under Requirement R8 or security plan(s) developed under Requirement R9, the Transmission Owner or Transmission Operator shall, within 60 calendar days of the completion of the unaffiliated third party review, for each recommendation:

- Modify its evaluation or security plan(s) consistent with the recommendation; or
- Document the reason(s) for not modifying the evaluation or security plan(s) consistent with the recommendation.

10.4. Each Transmission Owner and Transmission Operator shall implement procedures, such as the use of non-disclosure agreements, for protecting sensitive or confidential information made available to the unaffiliated third-party reviewer and to protect or exempt sensitive or confidential information developed pursuant to this Reliability Standard from public disclosure.

M10. Examples of evidence may include, but are not limited to, written or electronic documentation that the Transmission Owner or Transmission Operator had an unaffiliated third party review the evaluation performed under Requirement R8 and the security plan(s) developed under Requirement R9 as specified in Requirement R10 including, if applicable, documenting the reasons for not modifying the evaluation or security plan(s) in accordance with a recommendation under Part 10.3. Additionally, examples of evidence may include, but are not limited to, written or electronic documentation of procedures to protect information under Part 10.4.

C. Compliance

1. Compliance Monitoring Process

1.1. Compliance Enforcement Authority: "Compliance Enforcement Authority" (CEA) means NERC or the Regional Entity in their respective roles of monitoring and enforcing compliance with the NERC Reliability Standards.

1.2. Evidence Retention: The following evidence retention period(s) identify the period of time an entity is required to retain specific evidence to demonstrate compliance. For instances where the evidence retention period specified below is shorter than the time since the last audit, the CEA may ask an entity to provide other evidence to show that it was compliant for the full-time period since the last audit.

The Transmission Owner and Transmission Operator shall keep data or evidence to show compliance, as identified below, unless directed by its CEA to retain specific evidence for a longer period of time as part of an investigation:

The responsible entities shall retain evidence, as per Requirements R1 through R10, for three years.

If a Responsible Entity is found non-compliant, it shall keep information related to the non-compliance until mitigation is complete and approved, or for the time specified above, whichever is longer.

The CEA shall keep the last audit records and all requested and submitted subsequent audit records.

1.3. Compliance Monitoring and Enforcement Program: "Compliance Monitoring Enforcement Program" or "CMEP" means, depending on the context (1) the NERC Compliance Monitoring and Enforcement Program (Appendix 4C to the NERC Rules of Procedure) or the Commission-approved program of a Regional Entity, as applicable, or (2) the program, department or organization within NERC or a Regional Entity that is responsible for performing compliance monitoring and enforcement activities with respect to Registered Entities' compliance with Reliability Standards.

Violation Severity Levels

	Violation Severity Levels			
	Lower VSL	Moderate VSL	High VSL	Severe VSL
R1.	The Transmission Owner identified each applicable Transmission station(s) or Transmission substation(s) per Attachment 1, but did so after 36 calendar months, but less than or equal to 38 calendar months. OR The Transmission Owner identified each applicable Transmission station(s) or Transmission substation(s), but failed to identify less than or equal to 10% of the applicable Transmission station(s) or Transmission substation(s) per Attachment 1.	The Transmission Owner identified each applicable Transmission station(s) or Transmission substation(s) per Attachment 1, but did so after 38 calendar months, but less than or equal to 40 calendar months. OR The Transmission Owner identified each applicable Transmission station(s) or Transmission substation(s), but failed to identify more than 10% and less than or equal to 20% of the applicable Transmission station(s) or Transmission substation(s) per Attachment 1.	The Transmission Owner identified each applicable Transmission station(s) or Transmission substation(s) per Attachment 1, but did so after 40 calendar months, but less than or equal to 42 calendar months. OR The Transmission Owner identified each applicable Transmission station(s) or Transmission substation(s), but failed to identify more than 20% and less than or equal to 30% of the applicable Transmission station(s) or Transmission substation(s) per Attachment 1.	The Transmission Owner failed to identify each applicable Transmission station(s) or Transmission substation(s) per Attachment 1. OR The Transmission Owner identified each applicable Transmission station(s) or Transmission substation(s) per Attachment 1, but did so after more than 42 calendar months. OR The Transmission Owner identified each applicable Transmission station(s) or Transmission substation(s), but failed to identify more than 30% of the applicable Transmission station(s) or Transmission substation(s) per Attachment 1.

	Violation Severity Levels			
	Lower VSL	Moderate VSL	High VSL	Severe VSL
R2.	N/A	N/A	N/A	The Transmission Owner did not identify proximate Transmission station(s) and Transmission substation(s), irrespective of ownership, within 1500 feet or 457 meters (the shortest distance, measured substation fence line to substation fence line) of an applicable Transmission station or Transmission substation identified in Requirement R1.
R3.	The Transmission Owner has a risk assessment methodology that failed to include one of the requirements listed in Parts 3.1 through 3.4.	The Transmission Owner has a risk assessment methodology that failed to include two of the requirements listed in Parts 3.1 through 3.4.	The Transmission Owner has a risk assessment methodology that failed to include three of the requirements listed in Parts 3.1 through 3.4.	The Transmission Owner has a risk assessment methodology that failed to include four of the requirements listed in Parts 3.1 through 3.4. OR The Transmission Owner does not have a risk assessment methodology.

	Violation Severity Levels			
	Lower VSL	Moderate VSL	High VSL	Severe VSL
R4.	The Transmission Owner with applicable Transmission station(s) and Transmission substation(s) identified in Requirement R1 containing Bulk Electric System (BES) Elements owned by multiple Transmission Owners failed to coordinate with each appropriate Transmission Owner(s) to determine and document their individual and joint responsibilities for documenting a risk assessment methodology under Requirement R3 and for performing any required risk assessments per Requirement R5 for less than or equal to 25% of jointly owned applicable Transmission station(s) and Transmission substation(s).	The Transmission Owner with applicable Transmission station(s) and Transmission substation(s) identified in Requirement R1 containing Bulk Electric System (BES) Elements owned by multiple Transmission Owners failed to coordinate with each appropriate Transmission Owner(s) to determine and document their individual and joint responsibilities for documenting a risk assessment methodology under Requirement R3 and for performing any required risk assessments per Requirement R5 for more than 25% and less than or equal to 50% of jointly owned applicable Transmission station(s) and Transmission substation(s).	The Transmission Owner with applicable Transmission station(s) and Transmission substation(s) identified in Requirement R1 containing Bulk Electric System (BES) Elements owned by multiple Transmission Owners failed to coordinate with each appropriate Transmission Owner(s) to determine and document their individual and joint responsibilities for documenting a risk assessment methodology under Requirement R3 and for performing any required risk assessments per Requirement R5 for more than 50% and less than or equal to 75% of jointly owned applicable Transmission station(s) and Transmission substation(s).	The Transmission Owner with applicable Transmission station(s) and Transmission substation(s) identified in Requirement R1 containing Bulk Electric System (BES) Elements owned by multiple Transmission Owners failed to coordinate with each appropriate Transmission Owner(s) to determine and document their individual and joint responsibilities for documenting a risk assessment methodology under Requirement R3 and for performing any required risk assessments per Requirement R5 for more than 75% and less than or equal to 100% any evidence of jointly owned applicable Transmission station(s) and Transmission substation(s).
R5.	The Transmission Owner performed a risk assessment, but did so after 36 calendar months, but less than or equal to 38 calendar months.	The Transmission Owner performed a risk assessment, but did so after 38 calendar months, but less than or equal to 40 calendar months.	The Transmission Owner performed a risk assessment, but did so after 40 calendar months, but less than or equal to 42 calendar months.	The Transmission Owner performed a risk assessment, but did so after more than 42 calendar months.

	Violation Severity Levels			
	Lower VSL	Moderate VSL	High VSL	Severe VSL
	OR The Transmission Owner performed a risk assessment inconsistent with one of the methodology requirements listed in Requirement R3, Parts 3.1 through 3.4.	OR The Transmission Owner performed a risk assessment inconsistent with two of the methodology requirements listed in Requirement R3, Parts 3.1 through 3.4.	OR The Transmission Owner performed a risk assessment inconsistent with three of the methodology requirements listed in Requirement R3, Parts 3.1 through 3.4. OR The Transmission Owner performed a risk assessment but failed to include the primary control center identified in Part 5.2.	OR The Transmission Owner performed a risk assessment inconsistent with four of the methodology requirements listed in Requirement R3, Parts 3.1 through 3.4.
R6.	The Transmission Owner had an unaffiliated third party verify the risk assessment performed under Requirement R5, but did so in more than 90 calendar days, but less than or equal to 100 calendar days following completion of Requirement R5. OR The Transmission Owner had an unaffiliated third party verify the risk assessment performed under Requirement	The Transmission Owner had an unaffiliated third party verify the risk assessment performed under Requirement R5, but did so more than 100 calendar days, but less than or equal to 110 calendar days following completion of Requirement R5. OR The Transmission Owner had an unaffiliated third party verify the risk assessment performed under Requirement R5 and modified or documented the	The Transmission Owner had an unaffiliated third party verify the risk assessment performed under Requirement R5, but did so more than 110 calendar days, but less than or equal to 120 calendar days following completion of Requirement R5. OR The Transmission Owner had an unaffiliated third party verify the risk assessment performed under Requirement	The Transmission Owner had an unaffiliated third party verify the risk assessment performed under Requirement R5, but did so more than 120 calendar days following completion of Requirement R5. OR The Transmission Owner failed to have an unaffiliated third party verify the risk assessment performed under Requirement R5.

	Violation Severity Levels			
	Lower VSL	Moderate VSL	High VSL	Severe VSL
	R5 and modified or documented the technical basis for not modifying its identification under Requirement R5 as required by Part6.3, but did so more than 60 calendar days and less than or equal to 70 calendar days from completion of the third party verification.	technical basis for not modifying its identification under Requirement R5 as required by Part6.3, but did so more than 70 calendar days and less than or equal to 80 calendar days from completion of the third party verification.	R5 and modified or documented the technical basis for not modifying its identification under Requirement R5 as required by Part 6.3, but did so more than 80 calendar days from completion of the third party verification. OR The Transmission Owner had an unaffiliated third party verify the risk assessment performed under Requirement R5, but failed to modify or document the technical basis for not modifying its identification under R4 as required by Part 6.3.	OR The Transmission Owner had an unaffiliated third party verify the risk assessment performed under Requirement R5, but failed to implement procedures for protecting information per Part 6.4.
R7.	The Transmission Owner notified the Transmission Operator that operates the primary control center as specified in Requirement R7, but did so more than seven calendar days and less than or equal to nine calendar days	The Transmission Owner notified the Transmission Operator that operates the primary control center as specified in Requirement R7, but did so more than nine calendar days and less than or equal to 11 calendar days	The Transmission Owner notified the Transmission Operator that operates the primary control center as specified in Requirement R7, but did so more than 11 calendar days and less than or equal to 13 calendar days	The Transmission Owner notified the Transmission Operator that operates the primary control center as specified in Requirement R7, but did so more than 13 calendar days following the completion of Requirement R6.

	Violation Severity Levels			
	Lower VSL	Moderate VSL	High VSL	Severe VSL
	following the completion of Requirement R6. OR The Transmission Owner notified the Transmission Operator that operates the primary control center of the removal from the identification in Requirement R5, but did so more than seven calendar days and less than or equal to nine calendar days following the verification or the subsequent risk assessment.	following the completion of Requirement R6. OR The Transmission Owner notified the Transmission Operator that operates the primary control center of the removal from the identification in Requirement R5, but did so more than nine calendar days and less than or equal to 11 calendar days following the verification or the subsequent risk assessment.	following the completion of Requirement R6. OR The Transmission Owner notified the Transmission Operator that operates the primary control center of the removal from the identification in Requirement R5, but did so more than 11 calendar days and less than or equal to 13 calendar days following the verification or the subsequent risk assessment.	OR The Transmission Owner failed to notify the Transmission Operator that it operates a control center identified in Requirement R5. OR The Transmission Owner notified the Transmission Operator that operates the primary control center of the removal from the identification in Requirement R5, but did so more than 13 calendar days following the verification or the subsequent risk assessment. OR The Transmission Owner failed to notify the Transmission Operator that operates the primary control center of the removal from the identification in Requirement R5.

	Violation Severity Levels			
	Lower VSL	Moderate VSL	High VSL	Severe VSL
R8.	N/A	The responsible entity conducted an evaluation of the potential physical threats and vulnerabilities to each of its Transmission station(s), Transmission substation(s), and primary control center(s) identified in Requirement R5, but failed to consider one of Parts 8.1 through 8.3 in the evaluation.	The responsible entity conducted an evaluation of the potential physical threats and vulnerabilities to each of its Transmission station(s), Transmission substation(s), and primary control center(s) identified in Requirement R5, but failed to consider two of Parts 8.1 through 8.3 in the evaluation.	The responsible entity failed to conduct an evaluation of the potential physical threats and vulnerabilities to each of its Transmission station(s), Transmission substation(s), and primary control center(s) identified in Requirement R5. OR The responsible entity conducted an evaluation of the potential physical threats and vulnerabilities to each of its Transmission station(s), Transmission substation(s), and primary control center(s) identified in Requirement R5, but failed to consider Parts 8.1 through 8.3.

	Violation Severity Levels			
	Lower VSL	Moderate VSL	High VSL	Severe VSL
R9.	The responsible entity developed and implemented a documented physical security plan(s) that covers each of its Transmission station(s), Transmission substation(s), and primary control center(s) identified in Requirement R5, but did so more than 120 calendar days, but less than or equal to 130 calendar days after completing Requirement R6. OR The responsible entity developed and implemented a documented physical security plan(s) that covers its Transmission station(s), Transmission substation(s), and primary control center(s) identified in Requirement R5 and verified according to Requirement R6, but failed to include one of Parts 9.1 through 9.4 in the plan.	The responsible entity developed and implemented a documented physical security plan(s) that covers each of its Transmission station(s), Transmission substation(s), and primary control center(s) identified in Requirement R5, but did so more than 130 calendar days, but less than or equal to 140 calendar days after completing Requirement R6. OR The responsible entity developed and implemented a documented physical security plan(s) that covers its Transmission station(s), Transmission substation(s), and primary control center(s) identified in Requirement R5 and verified according to Requirement R6, but failed to include two of Parts 9.1 through 9.4 in the plan.	The responsible entity developed and implemented a documented physical security plan(s) that covers each of its Transmission station(s), Transmission substation(s), and primary control center(s) identified in Requirement R5, but did so more than 140 calendar days, but less than or equal to 150 calendar days after completing Requirement R6. OR The responsible entity developed and implemented a documented physical security plan(s) that covers its Transmission station(s), Transmission substation(s), and primary control center(s) identified in Requirement R5 and verified according to Requirement R6, but failed to include three of Parts 9.1 through 9.4 in the plan.	The responsible entity developed and implemented a documented physical security plan(s) that covers each of its Transmission station(s), Transmission substation(s), and primary control center(s) identified in Requirement R5, but did so more than 150 calendar days after completing the verification in Requirement R6. OR The responsible entity failed to develop and implement a documented physical security plan(s) that covers its Transmission station(s), Transmission substation(s), and primary control center(s) identified in Requirement R5 and verified according to Requirement R6. OR The responsible entity developed and implemented a documented physical security plan(s) that covers its

	Violation Severity Levels			
	Lower VSL	Moderate VSL	High VSL	Severe VSL
				Transmission station(s), Transmission substation(s), and primary control center(s) identified in Requirement R5 and verified according to Requirement R6, but failed to include Parts 9.1 through 9.4 in the plan.
R10.	The responsible entity had an unaffiliated third party review the evaluation performed under Requirement R8 and the security plan(s) developed under Requirement R9, but did so in more than 90 calendar days, but less than or equal to 100 calendar days. OR The responsible entity had an unaffiliated third party review the evaluation performed under Requirement R8 and the security plan(s) developed under Requirement R9 and modified or documented the reason for not modifying the security plan(s) as specified in Part 10.3, but did so more than 70 calendar days and less than	The responsible entity had an unaffiliated third party review the evaluation performed under Requirement R8 and the security plan(s) developed under Requirement R9, but did so in more than 100 calendar days, but less than or equal to 110 calendar days. OR The responsible entity had an unaffiliated third party review the evaluation performed under Requirement R8 and the security plan(s) developed under Requirement R9 and modified or documented the reason for not modifying the security plan(s) as specified in Part 10.3, but did so more than 80 calendar days following	The responsible entity had an unaffiliated third party review the evaluation performed under Requirement R8 and the security plan(s) developed under Requirement R9, but did so more than 110 calendar days, but less than or equal to 120 calendar days. OR The responsible entity failed to have an unaffiliated third party review the evaluation performed under Requirement R8 and the security plan(s) developed under Requirement R9. OR The responsible entity had an unaffiliated third party review	The responsible entity failed to have an unaffiliated third party review the evaluation performed under Requirement R8 and the security plan(s) developed under Requirement R9 in more than 120 calendar days.

	Violation Severity Levels			
	Lower VSL	Moderate VSL	High VSL	Severe VSL
	or equal to 80 calendar days following completion of the third party review.	completion of the third party review. OR The responsible entity had an unaffiliated third party review the evaluation performed under Requirement R8 and the security plan(s) developed under Requirement R9, but did not document the reason for not modifying the security plan(s) as specified in Part 10.3.	the evaluation performed under Requirement R8 and the security plan(s) developed under Requirement R9, but failed to implement procedures for protecting information per Part 10.4.	

D. Regional Variances

None.

E. Interpretations

None.

F. Associated Documents

CIP-014-4 Implementation Plan

CIP-014-4 Technical Rationale Document

Version History

Version	Date	Action	Change Tracking
1	October 1, 2015	Effective Date	New
2	April 16, 2015	Revised to meet FERC Order 802 directive to remove “widespread”.	Revision
2	May 7, 2015	Adopted by the NERC Board of Trustees	
2	July 14, 2015	FERC Letter Order in Docket No. RD15-4-000 approving CIP-014-2	
3	January 19, 2022	Revised to remove Compliance Section 1.4	Revision
3	June 16, 2022	FERC Letter Order in Docket No. RD22-3-000 approving Modifications to CIP-014-3	Revision
3	June 16,2022	Effective Date	Revision
4	TBD	Revisions made by the Project 2023-06 drafting team	Revision

Attachment 1 – Applicability Criteria

Applicable Transmission station(s) or Transmission substation(s) are those that meet any of the following criteria:

1. Transmission Facilities operated at 500 kV or higher. For the purpose of this criterion, the collector bus for a generation plant is not considered a Transmission Facility, but is part of the generation interconnection Facility.

2. Transmission Facilities that are operating between 200 kV and 499 kV at a single station or substation, where the station or substation is connected at 200 kV or higher voltages to three or more other Transmission stations or substations and has an "aggregate weighted value" exceeding 3000 according to the table below. The "aggregate weighted value" for a single station or substation is determined by summing the "weight value per line" shown in the table below for each incoming and each outgoing BES Transmission Line that is connected to another Transmission station or substation. For the purpose of this criterion, the collector bus for a generation plant is not considered a Transmission Facility, but is part of the generation interconnection Facility.

Voltage Value of a Line	Weight Value per Line
less than 200 kV (not applicable)	(not applicable)
200 kV to 299 kV	700
300 kV to 499 kV	1300
500 kV and above	N/A

3. Transmission Facilities at a single station or substation location that are identified by its Reliability Coordinator, Planning Coordinator, or Transmission Planner as critical to the derivation of Interconnection Reliability Operating Limits (IROLs) and their associated contingencies.

4. Transmission Facilities identified as essential to meeting Nuclear Plant Interface Requirements (NPIRs).

Standard Development Timeline

This section is maintained by the drafting team during the development of the standard and will be removed when the standard is adopted by the NERC Board of Trustees (Board).

Description of Current Draft

CIP-014-4 is posted for a 45-day formal comment period with additional ballot.

Completed Actions	Date
Standards Committee approved Standard Authorization Request (SAR) for posting	June 21, 2023
SAR posted for comment	July 26, 2023 – August 24, 2023
Accepted Revised SAR	January 17, 2024
45-day formal or informal comment period with ballot	May 20, 2024 – July 3, 2024
45-day formal or informal comment period with additional ballot	September 23, 2024 – November 6, 2024

Anticipated Actions	Date
45-day formal comment period with additional ballot	June 6, 2025 – July 21, 2025
10-day final ballot	August 11, 2025 – August 20, 2025
Board adoption	February 11, 2026

New or Modified Term(s) Used in NERC Reliability Standards

This section includes all new or modified terms used in the proposed standard that will be included in the *Glossary of Terms Used in NERC Reliability Standards* upon applicable regulatory approval. Terms used in the proposed standard that are already defined and are not being modified can be found in the *Glossary of Terms Used in NERC Reliability Standards*. The new or revised terms listed below will be presented for approval along with the proposed standard. Upon Board adoption, this section will be removed.

Term(s):

None.

A. Introduction

1. **Title:** Physical Security

2. **Number:** CIP-014-4

3. **Purpose:** To identify and protect Transmission stations and Transmission substations, and their associated primary control centers, that if rendered inoperable or damaged ~~as a result of~~due to a physical attack, could ~~result in~~cause instability, uncontrolled separation, or Cascading within an Interconnection.

4. **Applicability:**

   4.1. Functional Entities:

   4.1.1. Transmission Owner that owns or jointly owns one or more Transmission ~~station(s)~~stations or Transmission ~~substation(s)~~substations that meet the applicability criteria of Attachment 1.

   4.1.2. Transmission Operator~~.~~

   Exemption: Facilities in a "protected area," as defined in 10 C.F.R. § 73.2, within the scope of a security plan approved or accepted by the Nuclear Regulatory Commission (NRC) are not subject to this Standard; or Facilities within the scope of a security plan approved or accepted by the Canadian Nuclear Safety Commission are not subject to this Reliability Standard.

5. **Effective Date:** See Implementation Plan for CIP-014-4.

B. Requirements and Measures

R1. Each Transmission Owner, at least once every 36 calendar months, shall ~~document a list of~~identify each applicable Transmission station~~(s)~~ and Transmission substation~~(s)~~ meeting any of the criteria in Attachment 1 that ~~are~~is either existing or planned to be in service within 36 calendar months. *[Violation Risk Factor: High; Time-Horizon: Long-term Planning]*

M1. Examples of evidence may include, but are not limited to, dated written or electronic documentation of the Transmission ~~stations~~station(s) and Transmission ~~substations~~substation(s) (existing and those planned to be in service within 36 calendar months) that meet any of the criteria in Attachment 1.

R2. Each Transmission Owner shall ~~have documented criteria to determine those~~identify proximate Transmission station(s) and Transmission substation(s), irrespective of ownership, within ~~½ mile~~1500 feet or 457 meters (the shortest distance, measured substation fence line to substation fence line) of an applicable Transmission station or Transmission substation ~~documented~~identified in Requirement R1~~, that could be impacted by a single physical attack. The criteria shall address at a minimum the following: .~~ *[Violation Risk Factor: Medium; Time-Horizon: Long-term Planning]*

~~**2.1.** Line of sight between multiple Transmission station(s) or Transmission substation(s) from a single location without obstruction.~~

~~**2.2.** Ease of access from a common roadway that exists between multiple Transmission station(s) or Transmission substation(s).~~

M2. Examples of evidence may include, but are not limited to, dated written or electronic documentation of the ~~criteria established~~Transmission stations or Transmission substations determined in Requirement R2.

R3. Each Transmission Owner shall have a documented risk assessment methodology~~,~~ ~~including criteria for steady-state and dynamic simulations,~~ for evaluating the loss ~~due to a physical attack~~ of each applicable Transmission station~~(s) and~~ or Transmission substation~~(s) documented~~ identified in Requirement R1~~ and Transmission substation(s) or Transmission station(s) determined to be in proximity per Requirement R2~~. The methodology shall include, at a minimum, the following: *[Violation Risk Factor: High; Time-Horizon: Long-term Planning]*

3.1. Documented criteria for assessing instability, uncontrolled separation, or Cascading within an Interconnection. The criteria shall include, at a minimum, thresholds identifying unacceptable generation and load loss within an Interconnection.

~~**3.1.** Technically supported thresholds and rationale for determining the amount of acceptable load loss, the amount of acceptable generation loss, post-event response, and any additional considerations recognized as resulting in instability,~~

~~uncontrolled separation, or Cascading within an Interconnection. The technical rationale shall include:~~

~~**3.1.1.** Steady-state and dynamic system response to events that could lead to load loss, generation loss, and other unacceptable post-event response within an Interconnection.~~

3.2. ~~Steady-state~~A provision that steady-state and dynamic simulations shall each be performed ~~under System conditions that are more likely to contribute to instability, uncontrolled separation, or Cascading within an Interconnection~~using a System peak Load case and a System Off-Peak Load case.

3.3. A specification for Fault simulations, including:

~~**3.2.1.** The simulations shall include the removal of all Elements that Protection Systems and other controls are expected to automatically disconnect for each event.~~

~~**3.2.2.** If steady-state and dynamic simulations each show acceptable system response but additional Elements trip during the dynamic simulation of an event, then additional steady-state analysis including any tripped Elements from the dynamic simulations shall be conducted.~~

3.3.1. ~~**3.3.**~~ For each applicable Transmission station or Transmission substation listed in accordance with Requirement R1, ~~analysis shall include~~ a Fault at the applicable Transmission station or Transmission substation ~~and~~ .

- For each Transmission station or Transmission substation ~~identified~~determined in accordance with Requirement R2 as being in proximity to ~~the~~an applicable Transmission station or Transmission substation, Faults at both the applicable and proximate Transmission station(s) or Transmission substation(s).

3.4. A specification that Fault simulations ~~that~~ assume the loss of communication and Protection ~~System~~Systems at the applicable Transmission station(s) or Transmission substation(s) prior to or simultaneous with the Fault(s) studied under Requirement R3, Parts ~~3.2~~3.3.1 and ~~3.3~~3.3.2.

3.4.1. Removal of all Elements that Protection Systems and other controls are expected to automatically disconnect for each event.

3.4.2. ~~**3.4.1.**~~ Delayed (remote) clearing times shall be used unless otherwise technically substantiated.

3.4.3. ~~**3.4.2.**~~ Actual or more conservative ~~estimates of~~ clearing times shall be used unless otherwise technically substantiated.

M3. Each Transmission Owner shall provide dated evidence, such as electronic or hard copies, of a risk assessment methodology satisfying Requirement R3.

R4. Each Transmission Owner with applicable Transmission station(s) and Transmission substation(s) ~~per~~identified in Requirement R1 containing Bulk Electric System (BES) Elements owned by multiple Transmission Owners shall coordinate with ~~those~~each appropriate Transmission ~~Owners~~Owner(s) to determine and document their individual and joint responsibilities for documenting a risk assessment methodology under Requirement R3 and for performing any required risk assessments per Requirement R5. *[~~VRF~~Violation Risk Factor: Medium; Time-Horizon: Operations Planning, Long-term Planning]*

M4. Examples of acceptable evidence may include, but are not limited to, dated documentation, such as meeting minutes, agreements, and email correspondence, that identifies that agreement has been reached on individual and joint responsibilities for performing the required risk assessments.

R5. At least once every 36 calendar months, each Transmission Owner shall perform a risk assessment to identify applicable Transmission station(s) and Transmission substation(s) identified in Requirement R1, that if rendered inoperable or damaged ~~as a result of a physical attack~~ could result in instability, uncontrolled separation, or Cascading within an Interconnection, using the methodology established in Requirement R3, including any Transmission station(s) and Transmission substation(s) identified in accordance with ~~documentation established per~~ Requirement R4. If proximate Transmission station(s) and Transmission substation(s) were identified in Requirement R2, they should also be included in the risk assessment. *[~~VRF~~Violation Risk Factor: High; Time-Horizon: Operations Planning, Long-term Planning]*

5.1. ~~A~~During the current risk assessment, a Transmission station or Transmission substation identified in either the dynamic or steady-state ~~simulations~~simulation as causing instability, uncontrolled separation, or Cascading within an Interconnection when rendered inoperable or damaged ~~as a result of a physical attack does not require any additional simulations during the current risk assessment~~requires no further simulation.

5.2. If a previous risk assessment has identified a Transmission station or Transmission substation as causing instability, uncontrolled separation, or Cascading within an Interconnection when rendered inoperable or damaged, then the Transmission Owner may forgo additional assessments on that Transmission station or Transmission substation. Requirement R5, Part 5.3 and Requirement R7 through Requirement R10 still apply to that Transmission station or Transmission substation until a new risk assessment demonstrates otherwise.

5.3. ~~**5.2.**~~ The Transmission Owner shall identify the primary control center that operationally controls each Transmission station or Transmission substation identified as causing instability, uncontrolled separation, or Cascading within an Interconnection when rendered inoperable or damaged in the Requirement R5 risk assessment.

M5. Examples of acceptable evidence may include, but are not limited to, dated written or electronic documentation of the risk assessment satisfying Requirement R5 including the identified Transmission station(s) or Transmission substation(s). For Requirement R5, Part ~~5.2~~5.3, examples of acceptable evidence may include, but are not limited to, dated written or electronic documentation of the identification of the primary control center that operationally controls each identified Transmission station or Transmission substation.

R6. Each Transmission Owner shall have an unaffiliated third party verify the risk assessment performed under Requirement R5. The verification may occur ~~concurrent~~concurrently with or after the risk assessment performed under Requirement R5. *[~~VRF~~Violation Risk Factor: Medium~~High~~; Time-Horizon: Long-term Planning]*

6.1. Each Transmission Owner shall select an unaffiliated verifying entity that is either:

- ~~**6.1.1.**~~ A registered Planning Coordinator, Transmission Planner, or Reliability Coordinator; or
- ~~**6.1.2.**~~ An entity that has transmission planning or analysis experience.

6.2. The unaffiliated third-party verification shall verify the Transmission Owner's risk assessment performed under Requirement R5, which may include recommendations for the addition or deletion of a Transmission station(s) or Transmission substation(s). The Transmission Owner shall ensure the verification is completed within 90 calendar days following the completion of the Requirement R5 risk assessment.

6.3. If the unaffiliated verifying entity recommends that the Transmission Owner add a Transmission station(s) or Transmission substation(s) to, or remove a Transmission station~~(s)~~ or Transmission substation~~(s)~~ from, its identification under Requirement R5, the Transmission Owner shall either, within 60 calendar days of completion of the verification, for each recommended addition or removal of a Transmission station or Transmission substation:

- Modify its identification under Requirement R5 consistent with the recommendation; or
- Document the technical basis for not modifying the identification in accordance with the recommendation.

6.4. Each Transmission Owner shall implement procedures, such as the use of non-disclosure agreements, for protecting sensitive or confidential information made available to the unaffiliated third-party verifier and to protect or exempt sensitive or confidential information developed pursuant to this Reliability Standard from public disclosure.

M6. Examples of acceptable evidence may include, but are not limited to, dated written or electronic documentation that the Transmission Owner completed an unaffiliated

third party verification of the Requirement R5 risk assessment and satisfied all of the applicable provisions of Requirement R6, including, if applicable, documenting the technical basis for not modifying the identification in Requirements R1, R2, R3, R4, and R5 as specified under Part 6.3. Additionally, examples of evidence may include, but are not limited to, written or electronic documentation of procedures to protect information under Part 6.4.

R7. For a primary control center(s) identified by the Transmission Owner according to Requirement R5, Part 5.2 that a) operationally controls an identified Transmission station or Transmission substation verified according to Requirement ~~R5~~R6, and b) is not under the operational control of the Transmission Owner: the Transmission Owner shall, within seven calendar days following completion of Requirement ~~R5~~R6, notify the Transmission Operator that has operational control of the primary control center of such identification and the date of completion of Requirement R6. ~~R5 . [VRF~~ *[Violation Risk Factor: Lower~~Medium~~; Time-Horizon: Long-term Planning]*

7.1. If a Transmission station or Transmission substation previously identified under Requirements R1, R2, R3, R4, and R5 and verified according to Requirement R6 is removed from the identification during a subsequent risk assessment performed according to Requirement R5 or a verification according to Requirement R6, then the Transmission Owner shall, within seven calendar days following the verification or the subsequent risk assessment, notify the Transmission Operator that has operational control of the primary control center of the removal.

M7. Examples of acceptable evidence may include, but are not limited to, written or electronic notifications or communications that the Transmission Owner notified each Transmission Operator, as applicable, according to Requirement R7.

R8. Each Transmission Owner that identified a Transmission station, Transmission substation, or a primary control center in Requirement R5 and verified according to Requirement R6, and each Transmission Operator notified by a Transmission Owner according to Requirement R7, shall conduct an evaluation of the potential threats and vulnerabilities of a physical attack to each of their respective Transmission station(s), Transmission substation(s), and primary control center(s) identified in Requirement R5 and verified according to Requirement R6. The evaluation shall consider the following: *[~~VRF~~Violation Risk Factor: Medium; Time-Horizon: Operations Planning, Long-term Planning]*

8.1. Unique characteristics of the identified and verified Transmission station(s), Transmission substation(s), and primary control center(s);

8.2. Prior history of attack(s) on similar facilities taking into account the frequency, geographic proximity, and severity of past physical security related events; and

8.3. Intelligence or threat warnings received from sources such as law enforcement, the Electric Reliability Organization (ERO), the Electricity Sector Information

Sharing and Analysis Center (~~ES-ISAC~~E-ISAC), U.S. federal and/or Canadian governmental agencies, or their successors.

M8. Examples of evidence may include, but are not limited to, dated written or electronic documentation that the Transmission Owner or Transmission Operator conducted an evaluation of the potential threats and vulnerabilities of a physical attack to their respective Transmission station(s), Transmission substation(s), and primary control center(s) as specified in Requirement R8.

R9. Each Transmission Owner that identified a Transmission station, Transmission substation, or primary control center in Requirement R5 and verified according to Requirement R6, and each Transmission Operator notified by a Transmission Owner according to Requirement R7, shall develop and implement a documented physical security plan(s) that covers their respective Transmission station(s), Transmission substation(s), and primary control center(s). The physical security plan(s) shall be developed within 120 calendar days following the completion of Requirement R6 and executed according to the timeline specified in the physical security plan(s). The physical security plan(s) shall include the following attributes: [*Violation Risk Factor*: *High; Time-Horizon: Long-term Planning*]

9.1. Resiliency or security measures designed collectively to deter, detect, delay, assess, communicate, and respond to potential physical threats and vulnerabilities identified during the evaluation conducted in Requirement R8.

9.2. Law enforcement contact and coordination information.

9.3. A timeline for executing the physical security enhancements and modifications specified in the physical security plan.

9.4. Provisions to evaluate evolving physical threats, and their corresponding security measures, to the Transmission station(s), Transmission substation(s), or primary control center(s).

M9. Examples of evidence may include, but are not limited to, dated written or electronic documentation of its physical security plan(s) that covers their respective identified and verified Transmission station(s), Transmission substation(s), and primary control center(s) as specified in Requirement R6, and additional evidence demonstrating execution of the physical security plan according to the timeline specified in the physical security plan.

R10. Each Transmission Owner that identified a Transmission station, Transmission substation, or primary control center in Requirement R5 and verified according to Requirement R6, and each Transmission Operator notified by a Transmission Owner according to Requirement R7, shall have an unaffiliated third party review the evaluation performed under Requirement R8 and the security plan(s) developed under Requirement R9. The review may occur concurrently with or after completion of the evaluation performed under Requirement R8 and the security plan

development under Requirement R9. *[~~VRF~~Violation Risk Factor: Medium; Time-Horizon: Long-term Planning]*

10.1. Each Transmission Owner and Transmission Operator shall select an unaffiliated third-party reviewer from the following:

- An entity or organization with electric industry physical security experience and whose review staff has at least one member who holds either a Certified Protection Professional (CPP) or Physical Security Professional (PSP) certification~~.~~;
- An entity or organization approved by the ERO~~.~~;
- A governmental agency with physical security expertise~~.~~; or
- An entity or organization with demonstrated law enforcement, government, or military physical security expertise.

10.2. The Transmission Owner or Transmission Operator, respectively, shall ensure that the unaffiliated third-party review is completed within 90 calendar days of completing the security plan(s) developed in Requirement R9. The unaffiliated third-party review may, but is not required to, include recommended changes to the evaluation performed under Requirement R8 or the security plan(s) developed under Requirement R9.

10.3. If the unaffiliated third-party reviewer recommends changes to the evaluation performed under Requirement R8 or security plan(s) developed under Requirement R9, the Transmission Owner or Transmission Operator shall, within 60 calendar days of the completion of the unaffiliated third party review, for each recommendation:

- Modify its evaluation or security plan(s) consistent with the recommendation; or
- Document the reason(s) for not modifying the evaluation or security plan(s) consistent with the recommendation.

10.4. Each Transmission Owner and Transmission Operator shall implement procedures, such as the use of non-disclosure agreements, for protecting sensitive or confidential information made available to the unaffiliated third-party reviewer and to protect or exempt sensitive or confidential information developed pursuant to this Reliability Standard from public disclosure.

M10. Examples of evidence may include, but are not limited to, written or electronic documentation that the Transmission Owner or Transmission Operator had an unaffiliated third party review the evaluation performed under Requirement R8 and the security plan(s) developed under Requirement R9 as specified in Requirement R10 including, if applicable, documenting the reasons for not modifying the evaluation or security plan(s) in accordance with a recommendation under Part 10.3. Additionally,

examples of evidence may include, but are not limited to, written or electronic documentation of procedures to protect information under Part 10.4.

C. Compliance

1. Compliance Monitoring Process

1.1. Compliance Enforcement Authority: "Compliance Enforcement Authority" (CEA) means NERC or the Regional Entity~~, or any entity as otherwise designated by an Applicable Governmental Authority,~~ in their respective roles of monitoring and~~/or~~ enforcing compliance with ~~mandatory and enforceable~~the NERC Reliability Standards~~ in their respective jurisdictions~~.

1.2. Evidence Retention: The following evidence retention period(s) identify the period of time an entity is required to retain specific evidence to demonstrate compliance. For instances where the evidence retention period specified below is shorter than the time since the last audit, the ~~Compliance Enforcement Authority~~CEA may ask an entity to provide other evidence ~~during an on-site visit~~ to show that it was compliant for the full-time period since the last audit.

The Transmission Owner and Transmission Operator shall keep data or evidence to show compliance, as identified below, unless directed by its ~~Compliance Enforcement Authority (~~CEA~~)~~ to retain specific evidence for a longer period of time as part of an investigation:

The responsible entities shall retain evidence, as per Requirements R1 through R10, for three years.

If a Responsible Entity is found non-compliant, it shall keep information related to the non-compliance until mitigation is complete and approved, or for the time specified above, whichever is longer.

The ~~Compliance Enforcement Authority~~CEA shall keep the last audit records and all requested and submitted subsequent audit records.

1.3. Compliance Monitoring and Enforcement Program: ~~As defined in~~"Compliance Monitoring Enforcement Program" or "CMEP" means, depending on the context (1) the NERC ~~Rules of Procedure, "~~Compliance Monitoring and Enforcement Program~~" refers to the identification of the processes that will be used to evaluate data or information for the purpose of assessing performance or outcomes with the associated~~ (Appendix 4C to the NERC Rules of Procedure) or the Commission-approved program of a Regional Entity, as applicable, or (2) the program, department or organization within NERC or a Regional Entity that is responsible for performing compliance monitoring and enforcement activities with respect to Registered Entities' compliance with Reliability ~~Standard~~Standards.

Violation Severity Levels

R #	Violation Severity Levels			
	Lower VSL	Moderate VSL	High VSL	Severe VSL
R1.	The Transmission Owner ~~documented a list of~~ identified each applicable Transmission station(s) or Transmission substation(s) per Attachment 1, but did so after 36 calendar months, but less than or equal to 38 calendar months. OR The Transmission Owner ~~documented a list of~~ identified each applicable Transmission station(s) or Transmission substation(s), but failed to identify less than or equal to 10% of the applicable Transmission station(s) or Transmission substation(s) per Attachment 1.	The Transmission Owner ~~documented a list of~~ identified each applicable Transmission station(s) or Transmission substation(s) per Attachment 1, but did so after 38 calendar months, but less than or equal to 40 calendar months. OR The Transmission Owner ~~documented a list of~~ identified each applicable Transmission station(s) or Transmission substation(s), but failed to identify more than 10% and less than or equal to 20% of the applicable Transmission station(s) or Transmission substation(s) per Attachment 1.	The Transmission Owner ~~documented a list of~~ identified each applicable Transmission station(s) or Transmission substation(s) per Attachment 1, but did so after 40 calendar months, but less than or equal to 42 calendar months. OR The Transmission Owner ~~documented a list of~~ identified each applicable Transmission station(s) or Transmission substation(s), but failed to identify more than 20% and less than or equal to 30% of the applicable Transmission station(s) or Transmission substation(s) per Attachment 1.	The Transmission Owner failed to identify ~~document~~ a list of applicable Transmission station(s) or Transmission substation(s) per Attachment 1. OR The Transmission Owner ~~documented a list of~~ identified each applicable Transmission station(s) or Transmission substation(s) per Attachment 1, but did so after more than 42 calendar months. OR The Transmission Owner identified each ~~a list of~~ applicable Transmission station(s) or Transmission substation(s), but failed to identify more than 30% of the applicable Transmission station(s) or Transmission substation(s) per Attachment 1.

R #	Violation Severity Levels			
	Lower VSL	Moderate VSL	High VSL	Severe VSL
R2.	N/A	N/A	N/A	The Transmission Owner did not identify proximate Transmission station(s) and Transmission substation(s), irrespective of ownership, within 1500 feet or 457 meters (the shortest distance, measured substation fence line to substation fence line) of an applicable Transmission station or Transmission substation identified in Requirement R1.~~have documented criteria to determine when Transmission station(s) or Transmission substation(s) were in proximity for those identified in Requirement R1.~~ ~~OR~~ ~~The Transmission Owner failed to use the documented criteria to identify which Transmission station(s) or Transmission substation(s) are in proximity to each other.~~
R3.	The Transmission Owner has a risk assessment methodology	The Transmission Owner has a risk assessment methodology	The Transmission Owner has a risk assessment methodology	The Transmission Owner has a risk assessment methodology

R #	Violation Severity Levels			
	Lower VSL	Moderate VSL	High VSL	Severe VSL
	that failed to include one of the requirements listed in Parts 3.1 through 3.4.	that failed to include two of the requirements listed in Parts 3.1 through 3.4.	that failed to include three ~~or more~~ of the requirements listed in Parts 3.1 through 3.4.	that failed to include four of the requirements listed in Parts 3.1 through 3.4. OR The Transmission Owner does not have a risk assessment methodology.
R4.	The Transmission Owner with applicable Transmission station(s) and Transmission substation(s) identified in Requirement R1 containing Bulk Electric System (BES) Elements owned by multiple Transmission Owners failed to coordinate with each appropriate Transmission Owner(s) to determine and document their individual and joint responsibilities for documenting a risk assessment methodology under Requirement R3 and for performing any required risk assessments per Requirement R5 for ~~failed to coordinate~~ less than or equal to 25% of jointly owned applicable Transmission station(s) and	The Transmission Owner with applicable Transmission station(s) and Transmission substation(s) identified in Requirement R1 containing Bulk Electric System (BES) Elements owned by multiple Transmission Owners failed to coordinate with each appropriate Transmission Owner(s) to determine and document their individual and joint responsibilities for documenting a risk assessment methodology under Requirement R3 and for performing any required risk assessments per Requirement R5 for ~~failed to coordinate~~ more than 25% and less than or equal to 50% of jointly owned applicable	The Transmission Owner with applicable Transmission station(s) and Transmission substation(s) identified in Requirement R1 containing Bulk Electric System (BES) Elements owned by multiple Transmission Owners failed to coordinate with each appropriate Transmission Owner(s) to determine and document their individual and joint responsibilities for documenting a risk assessment methodology under Requirement R3 and for performing any required risk assessments per Requirement R5 for ~~failed to coordinate~~ more than 50% and less than or equal to 75% of jointly owned applicable	The Transmission Owner with applicable Transmission station(s) and Transmission substation(s) identified in Requirement R1 containing Bulk Electric System (BES) Elements owned by multiple Transmission Owners failed to coordinate with each appropriate Transmission Owner(s) to determine and document their individual and joint responsibilities for documenting a risk assessment methodology under Requirement R3 and for performing any required risk assessments per Requirement R5 for ~~failed to coordinate~~ more than 75% and less than or equal to 100% any evidence of jointly owned applicable

R #	Violation Severity Levels			
	Lower VSL	Moderate VSL	High VSL	Severe VSL
	Transmission substation(s) ~~with other owner(s)~~.	Transmission station(s) and Transmission substation(s) ~~with other owner(s)~~.	Transmission station(s) and Transmission substation(s) ~~with other owner(s)~~.	Transmission station(s) and Transmission substation(s) ~~with other owner(s)~~.
R5.	The Transmission Owner performed a risk assessment, but did so after 36 calendar months, but less than or equal to 38 calendar months. OR The Transmission Owner performed a risk assessment inconsistent with one of the methodology requirements listed in Requirement R3, Parts 3.1 through 3.4.	The Transmission Owner performed a risk assessment, but did so after 38 calendar months, but less than or equal to 40 calendar months. OR The Transmission Owner performed a risk assessment inconsistent with two of the methodology requirements listed in Requirement R3, Parts 3.1 through 3.4.	The Transmission ~~owner~~Owner performed a risk assessment, but did so after 40 calendar months, but less than or equal to 42 calendar months. OR The Transmission Owner performed a risk assessment inconsistent with three ~~or more~~ of the methodology requirements listed in Requirement R3, Parts 3.1 through 3.4. OR The Transmission Owner performed a risk assessment but failed to include the primary control center identified in Part 5.2.	The Transmission Owner performed a risk assessment, but did so after more than 42 calendar months. OR The Transmission Owner performed a risk assessment inconsistent with four of the methodology requirements listed in Requirement R3, Parts 3.1 through 3.4.
R6.	The Transmission Owner had an unaffiliated third party verify the risk assessment performed under Requirement	The Transmission Owner had an unaffiliated third party verify the risk assessment performed under Requirement	The Transmission Owner had an unaffiliated third party verify the risk assessment performed under Requirement	The Transmission Owner had an unaffiliated third party verify the risk assessment performed under Requirement

R #	Violation Severity Levels			
	Lower VSL	Moderate VSL	High VSL	Severe VSL
	R5, but did so in more than 90 calendar days, but less than or equal to 100 calendar days following completion of Requirement R5. OR The Transmission Owner had an unaffiliated third party verify the risk assessment performed under Requirement R5 and modified or documented the technical basis for not modifying its identification under Requirement R5 as required by Part6.3, but did so more than 60 calendar days and less than or equal to 70 calendar days from completion of the third party verification.	R5, but did so more than 100 calendar days, but less than or equal to 110 calendar days following completion of Requirement R5. OR The Transmission Owner had an unaffiliated third party verify the risk assessment performed under Requirement R5 and modified or documented the technical basis for not modifying its identification under Requirement R5 as required by Part6.3, but did so more than 70 calendar days and less than or equal to 80 calendar days from completion of the third party verification.	R5, but did so more than 110 calendar days, but less than or equal to 120 calendar days following completion of Requirement R5. OR The Transmission Owner had an unaffiliated third party verify the risk assessment performed under Requirement R5 and modified or documented the technical basis for not modifying its identification under Requirement R5 as required by Part 6.3, but did so more than 80 calendar days from completion of the third party verification~~;~~. OR The Transmission Owner had an unaffiliated third party verify the risk assessment performed under Requirement R5, but failed to modify or document the technical basis for not modifying its identification	R5, but did so more than 120 calendar days following completion of Requirement R5. OR The Transmission Owner failed to have an unaffiliated third party verify the risk assessment performed under Requirement R5. OR The Transmission Owner had an unaffiliated third party verify the risk assessment performed under Requirement R5, but failed to implement procedures for protecting information per Part 6.4.

R #	Violation Severity Levels			
	Lower VSL	Moderate VSL	High VSL	Severe VSL
			under R4 as required by Part 6.3.	
R7.	The Transmission Owner notified the Transmission Operator that operates the primary control center as specified in Requirement R7, but did so more than seven calendar days and less than or equal to nine calendar days following the completion of Requirement R6. OR The Transmission Owner notified the Transmission Operator that operates the primary control center of the removal from the identification in Requirement R5, but did so more than seven calendar days and less than or equal to nine calendar days following the verification or the subsequent risk assessment.	The Transmission Owner notified the Transmission Operator that operates the primary control center as specified in Requirement R7, but did so more than nine calendar days and less than or equal to 11 calendar days following the completion of Requirement R6. OR The Transmission Owner notified the Transmission Operator that operates the primary control center of the removal from the identification in Requirement R5, but did so more than nine calendar days and less than or equal to 11 calendar days following the verification or the subsequent risk assessment.	The Transmission Owner notified the Transmission Operator that operates the primary control center as specified in Requirement R7, but did so more than 11 calendar days and less than or equal to 13 calendar days following the completion of Requirement R6. OR The Transmission Owner notified the Transmission Operator that operates the primary control center of the removal from the identification in Requirement R5, but did so more than 11 calendar days and less than or equal to 13 calendar days following the verification or the subsequent risk assessment.	The Transmission Owner notified the Transmission Operator that operates the primary control center as specified in Requirement R7, but did so more than 13 calendar days following the completion of Requirement R6. OR The Transmission Owner failed to notify the Transmission Operator that it operates a control center identified in Requirement R5. OR The Transmission Owner notified the Transmission Operator that operates the primary control center of the removal from the identification in Requirement R5, but did so more than 13 calendar days following the

R #	Violation Severity Levels			
	Lower VSL	Moderate VSL	High VSL	Severe VSL
				verification or the subsequent risk assessment. OR The Transmission Owner failed to notify the Transmission Operator that operates the primary control center of the removal from the identification in Requirement R5.
R8.	N/A	The ~~Responsible Entity~~responsible entity conducted an evaluation of the potential physical threats and vulnerabilities to each of its Transmission station(s), Transmission substation(s), and primary control center(s) identified in Requirement R5, but failed to consider one of Parts 8.1 through 8.3 in the evaluation.	The ~~Responsible Entity~~responsible entity conducted an evaluation of the potential physical threats and vulnerabilities to each of its Transmission station(s), Transmission substation(s), and primary control center(s) identified in Requirement R5, but failed to consider two of Parts 8.1 through 8.3 in the evaluation.	The ~~Responsible Entity~~responsible entity failed to conduct an evaluation of the potential physical threats and vulnerabilities to each of its Transmission station(s), Transmission substation(s), and primary control center(s) identified in Requirement R5. OR The ~~Responsible Entity~~responsible entity conducted an evaluation of the potential physical threats and vulnerabilities to each of its Transmission station(s), Transmission substation(s), and primary control center(s)

R #	Violation Severity Levels			
	Lower VSL	Moderate VSL	High VSL	Severe VSL
				identified in Requirement R5, but failed to consider Parts 8.1 through 8.3.
R9.	The ~~Responsible Entity~~responsible entity developed and implemented a documented physical security plan(s) that covers each of its Transmission station(s), Transmission substation(s), and primary control center(s) identified in Requirement R5, but did so more than 120 calendar days, but less than or equal to 130 calendar days after completing Requirement R6. OR The ~~Responsible Entity~~responsible entity developed and implemented a documented physical security plan(s) that covers its Transmission station(s), Transmission substation(s), and primary control center(s) identified in Requirement R5 and verified according to Requirement R6, but failed to	The ~~Responsible Entity~~responsible entity developed and implemented a documented physical security plan(s) that covers each of its Transmission station(s), Transmission substation(s), and primary control center(s) identified in Requirement R5, but did so more than 130 calendar days, but less than or equal to 140 calendar days after completing Requirement R6. OR The ~~Responsible Entity~~responsible entity developed and implemented a documented physical security plan(s) that covers its Transmission station(s), Transmission substation(s), and primary control center(s) identified in Requirement R5 and verified according to Requirement R6, but failed to	The ~~Responsible Entity~~responsible entity developed and implemented a documented physical security plan(s) that covers each of its Transmission station(s), Transmission substation(s), and primary control center(s) identified in Requirement R5, but did so more than 140 calendar days, but less than or equal to 150 calendar days after completing Requirement R6~~;~~. OR The ~~Responsible Entity~~responsible entity developed and implemented a documented physical security plan(s) that covers its Transmission station(s), Transmission substation(s), and primary control center(s) identified in Requirement R5 and verified according to Requirement R6, but failed to	The ~~Responsible Entity~~responsible entity developed and implemented a documented physical security plan(s) that covers each of its Transmission station(s), Transmission substation(s), and primary control center(s) identified in Requirement R5, but did so more than 150 calendar days after completing the verification in Requirement R6. OR The ~~Responsible Entity~~responsible entity failed to develop and implement a documented physical security plan(s) that covers its Transmission station(s), Transmission substation(s), and primary control center(s) identified in Requirement R5 and verified according to Requirement R6.

R #	Violation Severity Levels			
	Lower VSL	Moderate VSL	High VSL	Severe VSL
	include one of Parts 9.1 through 9.4 in the plan.	include two of Parts 9.1 through 9.4 in the plan.	include three of Parts 9.1 through 9.4 in the plan.	OR The responsible entity developed and implemented a documented physical security plan(s) that covers its Transmission station(s), Transmission substation(s), and primary control center(s) identified in Requirement R5 and verified according to Requirement R6, but failed to include Parts 9.1 through 9.4 in the plan.
R10.	The ~~Responsible Entity~~responsible entity had an unaffiliated third party review the evaluation performed under Requirement R8 and the security plan(s) developed under Requirement R9, but did so in more than 90 calendar days, but less than or equal to 100 calendar days. OR The ~~Responsible Entity~~responsible entity had an unaffiliated third party review the evaluation performed	The ~~Responsible Entity~~responsible entity had an unaffiliated third party review the evaluation performed under Requirement R8 and the security plan(s) developed under Requirement R9, but did so in more than 100 calendar days, but less than or equal to 110 calendar days. OR The ~~Responsible Entity~~responsible entity had an unaffiliated third party review the evaluation performed	The ~~Responsible Entity~~responsible entity had an unaffiliated third party review the evaluation performed under Requirement R8 and the security plan(s) developed under Requirement R9, but did so more than 110 calendar days, but less than or equal to 120 calendar days. OR The ~~Responsible Entity~~responsible entity failed to have an unaffiliated third party review the evaluation	The ~~Responsible Entity~~responsible entity failed to have an unaffiliated third party review the evaluation performed under Requirement R8 and the security plan(s) developed under Requirement R9 in more than 120 calendar days. ~~OR~~ ~~The Responsible Entity failed to have an unaffiliated third party review the evaluation performed under Requirement R8 and the security plan(s)~~

R #	Violation Severity Levels			
	Lower VSL	Moderate VSL	High VSL	Severe VSL
	under Requirement R8 and the security plan(s) developed under Requirement R9 and modified or documented the reason for not modifying the security plan(s) as specified in Part 10.3, but did so more than ~~60~~70 calendar days and less than or equal to ~~70~~80 calendar days following completion of the third party review.	under Requirement R8 and the security plan(s) developed under Requirement R9 and modified or documented the reason for not modifying the security plan(s) as specified in Part 10.3, but did so more than ~~70 calendar days and less than or equal to~~ 80 calendar days following completion of the third party review. OR The responsible entity had an unaffiliated third party review the evaluation performed under Requirement R8 and the security plan(s) developed under Requirement R9, but did not document the reason for not modifying the security plan(s) as specified in Part 10.3.	performed under Requirement R8 and the security plan(s) developed under Requirement R9 ~~and modified or documented the reason for not modifying the security plan(s) as specified in Part 10.3, but did so more than 80 calendar days following completion of the third party review~~. OR The ~~Responsible Entity~~responsible entity had an unaffiliated third party review the evaluation performed under Requirement R8 and the security plan(s) developed under Requirement R9, but failed to implement procedures for protecting information per Part 10.4.~~ did not document the reason for not modifying the security plan(s) as specified in Part 10.3.~~	~~developed under Requirement R9.~~ ~~OR~~ ~~The Responsible Entity had an unaffiliated third party review the evaluation performed under Requirement R8 and the security plan(s) developed under Requirement R9, but failed to implement procedures for protecting information per Part 10.4.~~

D. Regional Variances

None.

E. Interpretations

None.

F. Associated Documents

CIP-014-4 Implementation Plan

CIP-014-4 Technical Rationale Document

Version History

Version	Date	Action	Change Tracking
1	October 1, 2015	Effective Date	New
2	April 16, 2015	Revised to meet FERC Order 802 directive to remove “widespread”.	Revision
2	May 7, 2015	Adopted by the NERC Board of Trustees	
2	July 14, 2015	FERC Letter Order in Docket No. RD15-4-000 approving CIP-014-2	
3	January 19, 2022	Revised to remove Compliance Section 1.4	Revision
3	June 16, 2022	FERC Letter Order in Docket No. RD22-3-000 approving Modifications to CIP-014-3	Revision
3	June 16,2022	Effective Date	Revision
4	TBD	Revisions made by the Project 2023-06 drafting team	Revision

Attachment 1 – Applicability Criteria

Applicable Transmission station(s) or Transmission substation(s) are those that meet any of the following criteria:

1. Transmission Facilities operated at 500 kV or higher. For the purpose of this criterion, the collector bus for a generation plant is not considered a Transmission Facility, but is part of the generation interconnection Facility.

2. Transmission Facilities that are operating between 200 kV and 499 kV at a single station or substation, where the station or substation is connected at 200 kV or higher voltages to three or more other Transmission stations or substations and has an "aggregate weighted value" exceeding 3000 according to the table below. The "aggregate weighted value" for a single station or substation is determined by summing the "weight value per line" shown in the table below for each incoming and each outgoing BES Transmission Line that is connected to another Transmission station or substation. For the purpose of this criterion, the collector bus for a generation plant is not considered a Transmission Facility, but is part of the generation interconnection Facility.

Voltage Value of a Line	Weight Value per Line
less than 200 kV (not applicable)	(not applicable)
200 kV to 299 kV	700
300 kV to 499 kV	1300
500 kV and above	~~0~~N/A

3. Transmission Facilities at a single station or substation location that are identified by its Reliability Coordinator, Planning Coordinator, or Transmission Planner as critical to the derivation of Interconnection Reliability Operating Limits (IROLs) and their associated contingencies.

4. Transmission Facilities identified as essential to meeting Nuclear Plant Interface Requirements (NPIRs).

Standard Development Timeline

This section is maintained by the drafting team during the development of the standard and will be removed when the standard is adopted by the NERC Board of Trustees (Board).

Description of Current Draft

CIP-014-4 is posted for a 45-day formal comment period with additional ballot.

Completed Actions	Date
Standards Committee approved Standard Authorization Request (SAR) for posting	June 21, 2023
SAR posted for comment	July 26, 2023 – August 24, 2023
Accepted Revised SAR	January 17, 2024
45-day formal or informal comment period with ballot	May 20, 2024 – July 3, 2024
45-day formal or informal comment period with additional ballot	September 23, 2024 – November 6, 2024

Anticipated Actions	Date
45-day formal comment period with additional ballot	June 6, 2025 – July 21, 2025
10-day final ballot	August 11, 2025 – August 20, 2025
Board adoption	February 11, 2026

New or Modified Term(s) Used in NERC Reliability Standards

This section includes all new or modified terms used in the proposed standard that will be included in the *Glossary of Terms Used in NERC Reliability Standards* upon applicable regulatory approval. Terms used in the proposed standard that are already defined and are not being modified can be found in the *Glossary of Terms Used in NERC Reliability Standards*. The new or revised terms listed below will be presented for approval along with the proposed standard. Upon Board adoption, this section will be removed.

Term(s):

None.

A. Introduction

1. **Title:** Physical Security

2. **Number:** CIP-~~014-3~~014-4

3. **Purpose:** To identify and protect Transmission stations and Transmission substations, and their associated primary control centers, that if rendered inoperable or damaged ~~as a result of~~due to a physical attack, could ~~result in~~cause instability, uncontrolled separation, or Cascading within an Interconnection.

4. **Applicability:**

   4.1. Functional Entities:

   4.1.1. ~~**4.1.1**~~ Transmission Owner that owns ~~**a**~~or jointly owns one or more Transmission ~~**station**~~stations or Transmission ~~**substation that meets any of the following**~~substations that meet the applicability criteria~~:~~ of Attachment 1.

   ~~**4.1.1.1** Transmission Facilities operated at 500 kV or higher. For the purpose of this criterion, the collector bus for a generation plant is not considered a Transmission Facility, but is part of the generation interconnection Facility.~~

   ~~**4.1.1.2** Transmission Facilities that are operating between 200 kV and 499 kV at a single station or substation, where the station or substation is connected at 200 kV or higher voltages to three or more other Transmission stations or substations and has an "aggregate weighted value" exceeding 3000 according to the table below. The "aggregate weighted value" for a single station or substation is determined by summing the "weight value per line" shown in the table below for each incoming and each outgoing BES Transmission Line that is connected to another Transmission station or substation. For the purpose of this criterion, the collector bus for a generation plant is not considered a Transmission Facility, but is part of the generation interconnection Facility.~~

~~**Voltage Value of a Line**~~	~~**Weight Value per Line**~~
~~less than 200 kV (not applicable)~~	~~(not applicable)~~
~~200 kV to 299 kV~~	~~700~~
~~300 kV to 499 kV~~	~~1300~~
~~500 kV and above~~	~~0~~

   ~~**4.1.1.3** Transmission Facilities at a single station or substation location that are identified by its Reliability Coordinator, Planning Coordinator, or Transmission Planner as critical to the derivation of Interconnection~~

~~Reliability Operating Limits (IROLs) and their associated contingencies.~~

~~**4.1.1.4** Transmission Facilities identified as essential to meeting Nuclear Plant Interface Requirements.~~

4.1.2. ~~**4.1.2**~~ Transmission Operator~~.~~

Exemption: Facilities in a "protected area," as defined in 10 C.F.R. § 73.2, within the scope of a security plan approved or accepted by the Nuclear Regulatory Commission (NRC) are not subject to this Standard; or~~;~~ Facilities within the scope of a security plan approved or accepted by the Canadian Nuclear Safety Commission are not subject to this Reliability Standard.

5. ~~5.~~ Effective ~~Dates~~Date:

See Implementation Plan for CIP-~~014-2~~014-4.

~~6. Background:~~

~~This Reliability Standard addresses the directives from the FERC order issued March 7, 2014, *Reliability Standards for Physical Security Measures*, 146 FERC ¶ 61,166 (2014), which required NERC to develop a physical security reliability standard(s) to identify and protect facilities that if rendered inoperable or damaged could result in instability, uncontrolled separation, or Cascading within an Interconnection.~~

B. Requirements and Measures

R1. Each Transmission Owner, at least once every 36 calendar months, shall identify each applicable Transmission station and Transmission substation meeting any of the criteria in Attachment 1 that is either existing or planned to be in service within 36 calendar months. *[Violation Risk Factor: High; Time-Horizon: Long-term Planning]*

M1. Examples of evidence may include, but are not limited to, dated written or electronic documentation of the Transmission station(s) and Transmission substation(s) (existing and those planned to be in service within 36 calendar months) that meet any of the criteria in Attachment 1.

R2. Each Transmission Owner shall identify proximate Transmission station(s) and Transmission substation(s), irrespective of ownership, within 1500 feet or 457 meters (the shortest distance, measured substation fence line to substation fence line) of an applicable Transmission station or Transmission substation identified in Requirement R1. *[Violation Risk Factor: Medium; Time-Horizon: Long-term Planning]*

M2. Examples of evidence may include, but are not limited to, dated written or electronic documentation of the Transmission stations or Transmission substations determined in Requirement R2.

R3. Each Transmission Owner shall have a documented risk assessment methodology for evaluating the loss of each applicable Transmission station or Transmission substation identified in Requirement R1. The methodology shall include, at a minimum, the following: *[Violation Risk Factor: High; Time-Horizon: Long-term Planning]*

3.1. Documented criteria for assessing instability, uncontrolled separation, or Cascading within an Interconnection. The criteria shall include, at a minimum, thresholds identifying unacceptable generation and load loss within an Interconnection.

3.2. A provision that steady-state and dynamic simulations shall each be performed using a System peak Load case and a System Off-Peak Load case.

3.3. A specification for Fault simulations, including:

3.3.1. For each applicable Transmission station or Transmission substation listed in accordance with Requirement R1, a Fault at the applicable Transmission station or Transmission substation.

3.3.2. For each Transmission station or Transmission substation determined in accordance with Requirement R2 as being in proximity to an applicable Transmission station or Transmission substation, Faults at both the applicable and proximate Transmission station(s) or Transmission substation(s).

3.4. A specification that Fault simulations assume the loss of communication and Protection Systems at the applicable Transmission station(s) or Transmission

substation(s) prior to or simultaneous with the Fault(s) studied under Requirement R3, Parts 3.3.1 and 3.3.2.

3.4.1. Removal of all Elements that Protection Systems and other controls are expected to automatically disconnect for each event.

3.4.2. Delayed (remote) clearing times shall be used unless otherwise technically substantiated.

3.4.3. Actual or more conservative clearing times shall be used unless otherwise technically substantiated.

M3. Each Transmission Owner shall provide dated evidence, such as electronic or hard copies, of a risk assessment methodology satisfying Requirement R3.

R4. Each Transmission Owner with applicable Transmission station(s) and Transmission substation(s) identified in Requirement R1 containing Bulk Electric System (BES) Elements owned by multiple Transmission Owners shall coordinate with each appropriate Transmission Owner(s) to determine and document their individual and joint responsibilities for documenting a risk assessment methodology under Requirement R3 and for performing any required risk assessments per Requirement R5. *[Violation Risk Factor: Medium; Time-Horizon: Operations Planning, Long-term Planning]*

M4. Examples of acceptable evidence may include, but are not limited to, dated documentation, such as meeting minutes, agreements, and email correspondence, that identifies that agreement has been reached on individual and joint responsibilities for performing the required risk assessments.

R5. At least once every 36 calendar months, each Transmission Owner shall perform a risk assessment to identify applicable Transmission station(s) and Transmission substation(s) identified in Requirement R1, that if rendered inoperable or damaged could result in instability, uncontrolled separation, or Cascading within an Interconnection, using the methodology established in Requirement R3, including any Transmission station(s) and Transmission substation(s) identified in accordance with Requirement R4. If proximate Transmission station(s) and Transmission substation(s) were identified in Requirement R2, they should also be included in the risk assessment. *[Violation Risk Factor: High; Time-Horizon: Operations Planning, Long-term Planning]*

5.1. During the current risk assessment, a Transmission station or Transmission substation identified in either the dynamic or steady-state simulation as causing instability, uncontrolled separation, or Cascading within an Interconnection when rendered inoperable or damaged requires no further simulation.

5.2. If a previous risk assessment has identified a Transmission station or Transmission substation as causing instability, uncontrolled separation, or Cascading within an Interconnection when rendered inoperable or damaged,

then the Transmission Owner may forgo additional assessments on that Transmission station or Transmission substation. Requirement R5, Part 5.3 and Requirement R7 through Requirement R10 still apply to that Transmission station or Transmission substation until a new risk assessment demonstrates otherwise.

5.3. The Transmission Owner shall identify the primary control center that operationally controls each Transmission station or Transmission substation identified as causing instability, uncontrolled separation, or Cascading within an Interconnection when rendered inoperable or damaged in the Requirement R5 risk assessment.

M5. Examples of acceptable evidence may include, but are not limited to, dated written or electronic documentation of the risk assessment satisfying Requirement R5 including the identified Transmission station(s) or Transmission substation(s). For Requirement R5, Part 5.3, examples of acceptable evidence may include, but are not limited to, dated written or electronic documentation of the identification of the primary control center that operationally controls each identified Transmission station or Transmission substation.

~~R1. Each Transmission Owner shall perform an initial risk assessment and subsequent risk assessments of its Transmission stations and Transmission substations (existing and planned to be in service within 24 months) that meet the criteria specified in Applicability Section 4.1.1. The initial and subsequent risk assessments shall consist of a transmission analysis or transmission analyses designed to identify the Transmission station(s) and Transmission substation(s) that if rendered inoperable or damaged could result in instability, uncontrolled separation, or Cascading within an Interconnection. [VRF: High; Time Horizon: Long-term Planning]~~

~~1.1. Subsequent risk assessments shall be performed:~~

- ~~At least once every 30 calendar months for a Transmission Owner that has identified in its previous risk assessment (as verified according to Requirement R2) one or more Transmission stations or Transmission substations that if rendered inoperable or damaged could result in instability, uncontrolled separation, or Cascading within an Interconnection; or~~
- ~~At least once every 60 calendar months for a Transmission Owner that has not identified in its previous risk assessment (as verified according to Requirement R2) any Transmission stations or Transmission substations that if rendered inoperable or damaged could result in instability, uncontrolled separation, or Cascading within an Interconnection.~~

~~1.2. The Transmission Owner shall identify the primary control center that operationally controls each Transmission station or Transmission substation identified in the Requirement R1 risk assessment.~~

~~M1. Examples of acceptable evidence may include, but are not limited to, dated written or electronic documentation of the risk assessment of its Transmission stations and Transmission substations (existing and planned to be in service within 24 months) that meet the criteria in Applicability Section 4.1.1 as specified in Requirement R1. Additionally, examples of acceptable evidence may include, but are not limited to, dated written or electronic documentation of the identification of the primary control center that operationally controls each Transmission station or Transmission substation identified in the Requirement R1 risk assessment as specified in Requirement R1, Part 1.2.~~

R6. ~~**R2.**~~ Each Transmission Owner shall have an unaffiliated third-party verify the risk assessment performed under Requirement ~~R1~~R5. The verification may occur ~~concurrent~~concurrently with or after the risk assessment performed under Requirement ~~R1. *[VRF: Medium*~~R5. *[Violation Risk Factor: Medium; Time-Horizon: Long-term Planning]*

6.1. ~~**2.1.**~~ Each Transmission Owner shall select an unaffiliated verifying entity that is either:

- A registered Planning Coordinator, Transmission Planner, or Reliability Coordinator; or
- An entity that has transmission planning or analysis experience.

6.2. ~~**2.2.**~~ The unaffiliated third-party verification shall verify the Transmission Owner's risk assessment performed under Requirement ~~R1~~R5, which may include recommendations for the addition or deletion of a Transmission station(s) or Transmission substation(s). The Transmission Owner shall ensure the verification is completed within 90 calendar days following the completion of the Requirement ~~R1~~R5 risk assessment.

6.3. ~~**2.3.**~~ If the unaffiliated verifying entity recommends that the Transmission Owner add a Transmission station(s) or Transmission substation(s) to, or remove a Transmission station~~(s)~~ or Transmission substation~~(s)~~ from, its identification under Requirement ~~R1~~R5, the Transmission Owner shall either, within 60 calendar days of completion of the verification, for each recommended addition or removal of a Transmission station or Transmission substation:

- Modify its identification under Requirement ~~R1~~R5 consistent with the recommendation; or
- Document the technical basis for not modifying the identification in accordance with the recommendation.

6.4. ~~**2.4.**~~ Each Transmission Owner shall implement procedures, such as the use of non-disclosure agreements, for protecting sensitive or confidential information made available to the unaffiliated third-party verifier and to protect or exempt

sensitive or confidential information developed pursuant to this Reliability Standard from public disclosure.

M6. ~~**M2.**~~ Examples of acceptable evidence may include, but are not limited to, dated written or electronic documentation that the Transmission Owner completed an unaffiliated third party verification of the Requirement ~~R1~~R5 risk assessment and satisfied all of the applicable provisions of Requirement ~~R2~~R6, including, if applicable, documenting the technical basis for not modifying the ~~Requirement R1~~ identification in Requirements R1, R2, R3, R4, and R5 as specified under Part ~~2.3~~6.3. Additionally, examples of evidence may include, but are not limited to, written or electronic documentation of procedures to protect information under Part ~~2.4~~6.4.

R7. ~~**R3.**~~ For a primary control center(s) identified by the Transmission Owner according to Requirement ~~R1~~R5, Part ~~1.2~~5.2 that a) operationally controls an identified Transmission station or Transmission substation verified according to Requirement ~~R2~~R6, and b) is not under the operational control of the Transmission Owner: the Transmission Owner shall, within seven calendar days following completion of Requirement ~~R2~~R6, notify the Transmission Operator that has operational control of the primary control center of such identification and the date of completion of Requirement ~~R2. *[VRF: Lower*~~R6. *[Violation Risk Factor: Lower; Time-Horizon: Long-term Planning]*

7.1. ~~**3.1.**~~ If a Transmission station or Transmission substation previously identified under ~~Requirement~~Requirements R1, R2, R3, R4, and R5 and verified according to Requirement ~~R2~~R6 is removed from the identification during a subsequent risk assessment performed according to Requirement ~~R1~~R5 or a verification according to Requirement ~~R2~~R6, then the Transmission Owner shall, within seven calendar days following the verification or the subsequent risk assessment, notify the Transmission Operator that has operational control of the primary control center of the removal.

M7. ~~**M3.**~~ Examples of acceptable evidence may include, but are not limited to, ~~dated~~ written or electronic notifications or communications that the Transmission Owner notified each Transmission Operator, as applicable, according to Requirement ~~R3~~R7.

R8. ~~**R4.**~~ Each Transmission Owner that identified a Transmission station, Transmission substation, or a primary control center in Requirement ~~R1~~R5 and verified according to Requirement ~~R2~~R6, and each Transmission Operator notified by a Transmission Owner according to Requirement ~~R3~~R7, shall conduct an evaluation of the potential threats and vulnerabilities of a physical attack to each of their respective Transmission station(s), Transmission substation(s), and primary control center(s) identified in Requirement ~~R1~~R5 and verified according to Requirement ~~R2~~R6. The evaluation shall consider the following: *[~~VRF~~Violation Risk Factor: Medium; Time-Horizon: Operations Planning, Long-term Planning]*

8.1. ~~**4.1.**~~ Unique characteristics of the identified and verified Transmission station(s), Transmission substation(s), and primary control center(s);

8.2. ~~**4.2.**~~ Prior history of attack(s) on similar facilities taking into account the frequency, geographic proximity, and severity of past physical security related events; and

8.3. ~~**4.3.**~~ Intelligence or threat warnings received from sources such as law enforcement, the Electric Reliability Organization (ERO), the Electricity Sector Information Sharing and Analysis Center (E~~S~~-ISAC), U.S. federal and/or Canadian governmental agencies, or their successors.

~~**M4**~~**M8.** Examples of evidence may include, but are not limited to, dated written or electronic documentation that the Transmission Owner or Transmission Operator conducted an evaluation of the potential threats and vulnerabilities of a physical attack to their respective Transmission station(s), Transmission substation(s), and primary control center(s) as specified in Requirement ~~R4~~R8.

R9. ~~**R5.**~~ Each Transmission Owner that identified a Transmission station, Transmission substation, or primary control center in Requirement ~~R1~~R5 and verified according to Requirement ~~R2~~R6, and each Transmission Operator notified by a Transmission Owner according to Requirement ~~R3~~R7, shall develop and implement a documented physical security plan(s) that covers their respective Transmission station(s), Transmission substation(s), and primary control center(s). The physical security plan(s) shall be developed within 120 calendar days following the completion of Requirement ~~R2~~R6 and executed according to the timeline specified in the physical security plan(s). The physical security plan(s) shall include the following attributes: [~~*VRF*~~*Violation Risk Factor*: *High; Time-Horizon: Long-term Planning*]

9.1. ~~**5.1.**~~ Resiliency or security measures designed collectively to deter, detect, delay, assess, communicate, and respond to potential physical threats and vulnerabilities identified during the evaluation conducted in Requirement ~~R4~~R8.

9.2. ~~**5.2.**~~ Law enforcement contact and coordination information.

9.3. ~~**5.3.**~~ A timeline for executing the physical security enhancements and modifications specified in the physical security plan.

9.4. ~~**5.4.**~~ Provisions to evaluate evolving physical threats, and their corresponding security measures, to the Transmission station(s), Transmission substation(s), or primary control center(s).

~~**M5**~~**M9.** Examples of evidence may include, but are not limited to, dated written or electronic documentation of its physical security plan(s) that covers their respective identified and verified Transmission station(s), Transmission substation(s), and primary control center(s) as specified in Requirement ~~R5~~R6, and additional evidence demonstrating execution of the physical security plan according to the timeline specified in the physical security plan.

R10. ~~**R6.**~~ Each Transmission Owner that identified a Transmission station, Transmission substation, or primary control center in Requirement ~~R1~~R5 and verified according to Requirement ~~R2~~R6, and each Transmission Operator notified by a Transmission Owner according to Requirement ~~R3~~R7, shall have an unaffiliated third party review the evaluation performed under Requirement ~~R4~~R8 and the security plan(s) developed under Requirement ~~R5~~R9. The review may occur concurrently with or after completion of the evaluation performed under Requirement ~~R4~~R8 and the security plan development under Requirement ~~R5. *[VRF*~~R9. *[Violation Risk Factor: Medium; Time-Horizon: Long-term Planning]*

10.1. ~~**6.1.**~~ Each Transmission Owner and Transmission Operator shall select an unaffiliated third-party reviewer from the following:

- An entity or organization with electric industry physical security experience and whose review staff has at least one member who holds either a Certified Protection Professional (CPP) or Physical Security Professional (PSP) certification~~.~~;
- An entity or organization approved by the ERO~~.~~;
- A governmental agency with physical security expertise~~.~~; or
- An entity or organization with demonstrated law enforcement, government, or military physical security expertise.

10.2. ~~**6.2.**~~ The Transmission Owner or Transmission Operator, respectively, shall ensure that the unaffiliated third-party review is completed within 90 calendar days of completing the security plan(s) developed in Requirement ~~R5~~R9. The unaffiliated third-party review may, but is not required to, include recommended changes to the evaluation performed under Requirement ~~R4~~R8 or the security plan(s) developed under Requirement ~~R5~~R9.

10.3. ~~**6.3.**~~ If the unaffiliated third-party reviewer recommends changes to the evaluation performed under Requirement ~~R4~~R8 or security plan(s) developed under Requirement ~~R5~~R9, the Transmission Owner or Transmission Operator shall, within 60 calendar days of the completion of the unaffiliated third party review, for each recommendation:

- Modify its evaluation or security plan(s) consistent with the recommendation; or
- Document the reason(s) for not modifying the evaluation or security plan(s) consistent with the recommendation.

10.4. ~~**6.4.**~~ Each Transmission Owner and Transmission Operator shall implement procedures, such as the use of non-disclosure agreements, for protecting sensitive or confidential information made available to the unaffiliated ~~third party~~third-party reviewer and to protect or exempt sensitive or confidential

information developed pursuant to this Reliability Standard from public disclosure.

~~M6~~M10. Examples of evidence may include, but are not limited to, written or electronic documentation that the Transmission Owner or Transmission Operator had an unaffiliated third party review the evaluation performed under Requirement ~~R4~~R8 and the security plan(s) developed under Requirement ~~R5~~R9 as specified in Requirement ~~R6~~R10 including, if applicable, documenting the reasons for not modifying the evaluation or security plan(s) in accordance with a recommendation under Part ~~6.3~~10.3. Additionally, examples of evidence may include, but are not limited to, written or electronic documentation of procedures to protect information under Part ~~6.4~~10.4.

C. Compliance

1. Compliance Monitoring Process

1.1. Compliance Enforcement Authority

~~: As defined in the NERC Rules of Procedure,~~ "Compliance Enforcement Authority" (CEA) means NERC or the Regional Entity in their respective roles of monitoring and enforcing compliance with the NERC Reliability Standards.

~~**1.2. Evidence Retention**~~

1.2. Evidence Retention: The following evidence retention ~~periods~~period(s) identify the period of time an entity is required to retain specific evidence to demonstrate compliance. For instances where the evidence retention period specified below is shorter than the time since the last audit, the CEA may ask an entity to provide other evidence ~~during an on-site visit~~ to show that it was compliant for the ~~full time~~full-time period since the last audit.

The Transmission Owner and Transmission Operator shall keep data or evidence to show compliance, as identified below, unless directed by its ~~Compliance Enforcement Authority (~~CEA~~)~~ to retain specific evidence for a longer period of time as part of an investigation~~.~~:

The responsible entities shall retain ~~documentation as~~ evidence, as per Requirements R1 through R10, for three years.

If a Responsible Entity is found non-compliant, it shall keep information related to the non-compliance until mitigation is complete and approved, or for the time specified above, whichever is longer.

The CEA shall keep the last audit records and all requested and submitted subsequent audit records~~, subject to the confidentiality provisions of Section 1500 of the Rules of Procedure and the provisions of Section 1.4 below~~.

~~**1.3. Compliance Monitoring and Assessment Processes:**~~

~~Compliance Audits~~

~~Self-Certifications~~
~~Spot Checking~~

1.3. Compliance Monitoring and Enforcement Program: "Compliance Monitoring Enforcement Program" or "CMEP" means, depending on the context (1) the NERC Compliance Monitoring and Enforcement Program (Appendix 4C to the NERC Rules of Procedure) or the Commission-approved program of a Regional Entity, as applicable, or (2) the program, department or organization within NERC or a Regional Entity that is responsible for performing compliance monitoring and enforcement activities with respect to Registered Entities' compliance with Reliability Standards.

~~Compliance~~ Violation ~~Investigations~~Severity Levels

~~Self-Reporting~~

~~Complaints Text~~

~~2. Table of Compliance Elements~~

~~R #~~	~~Time Horizon~~	~~VRF~~ ~~High~~ Violation Severity Levels ~~(CIP-014-3)~~			
		Lower VSL	Moderate VSL	High VSL	Severe VSL
~~R1~~	~~Long-term Planning~~	~~The Transmission Owner performed an initial risk assessment but did so after the date specified in the implementation plan for performing the initial risk assessment but less than or equal to two calendar months after that date;~~ ~~OR~~ ~~The Transmission Owner that has identified in its previous risk assessment one or more Transmission stations or Transmission substations that if rendered inoperable or damaged could result in instability, uncontrolled~~	~~The Transmission Owner performed an initial risk assessment but did so more than two calendar months after the date specified in the implementation plan for performing the initial risk assessment but less than or equal to four calendar months after that date;~~ ~~OR~~ ~~The Transmission Owner that has identified in its previous risk assessment one or more Transmission stations or Transmission substations that if rendered inoperable or damaged could result in instability, uncontrolled separation,~~	~~The Transmission Owner performed an initial risk assessment but did so more than four calendar months after the date specified in the implementation plan for performing the initial risk assessment but less than or equal to six calendar months after that date;~~ ~~OR~~ ~~The Transmission Owner that has identified in its previous risk assessment one or more Transmission stations or Transmission substations that if rendered inoperable or damaged could result in instability, uncontrolled separation,~~	~~The Transmission Owner performed an initial risk assessment but did so more than six calendar months after the date specified in the implementation plan for performing the initial risk assessment;~~ ~~OR~~ ~~The Transmission Owner failed to perform an initial risk assessment;~~ ~~OR~~ ~~The Transmission Owner that has identified in its previous risk assessment one or more Transmissionstations or Transmission substations that if rendered~~

~~R #~~	~~Time Horizon~~	~~VRF~~ ~~High~~ Violation Severity Levels ~~(CIP-014-3)~~			
		Lower VSL	Moderate VSL	High VSL	Severe VSL
		~~separation, or Cascading within an Interconnection performed a subsequent risk assessment but did so after 30 calendar months but less than or equal to 32 calendar months;~~ ~~OR~~ ~~The Transmission Owner that has not identified in its previous risk assessment any Transmission stations or Transmission substations that if rendered inoperable or damaged could result in instability, uncontrolled separation, or Cascading within an Interconnection~~	~~or Cascading within an Interconnection performed a subsequent risk assessment but did so after 32 calendar months but less than or equal to 34 calendar months;~~ ~~OR~~ ~~The Transmission Owner that has not identified in its previous risk assessment any Transmission stations or Transmission substations that if rendered inoperable or damaged could result in instability, uncontrolled separation, or Cascading within an Interconnection performed a subsequent risk assessment but did so after 62 calendar months~~	~~or Cascading within an Interconnection performed a subsequent risk assessment but did so after 34 calendar months but less than or equal to 36 calendar months;~~ ~~OR~~ ~~The Transmission Owner that has not identified in its previous risk assessment any Transmission stations or Transmission substations that if rendered inoperable or damaged could result in instability, uncontrolled separation, or Cascading within an Interconnection performed a subsequent risk assessment but did so after 64 calendar~~	~~inoperable or damaged could result in instability, uncontrolled separation, or Cascading within an Interconnection performed a subsequent risk assessment but did so after more than 36 calendar months;~~ ~~OR~~ ~~The Transmission Owner that has identified in its previous risk assessment one or more Transmission stations or Transmission substations that if rendered inoperable or damaged could result in instability, uncontrolledseparation, or Cascading within an Interconnection failed to perform a risk assessment;~~

~~R #~~	~~Time Horizon~~	~~VRF~~ ~~High~~ Violation Severity Levels ~~(CIP-014-3)~~			
		Lower VSL	Moderate VSL	High VSL	Severe VSL
		~~performed a subsequent risk assessment but did so after 60 calendar months but less than or equal to 62 calendar months.~~	~~but less than or equal to 64 calendar months.~~	~~months but less than or equal to 66 calendar months;~~ ~~OR~~ ~~The Transmission Owner performed a risk assessment but failed to include Part 1.2.~~	~~OR~~ ~~The Transmission Owner that has not identified in its previous risk assessment any Transmission stations or Transmission substations that if rendered inoperable or damaged could result in instability, uncontrolled separation, or Cascading within an Interconnection performed a subsequent risk assessment but did so after more than 66 calendar months;~~ ~~OR The Transmission Owner that has not identified in its previous risk assessment any Transmission station and Transmission substations that if rendered~~

~~R #~~	~~Time Horizon~~	~~VRF High~~ Violation Severity Levels ~~(CIP-014-3)~~			
		Lower VSL	Moderate VSL	High VSL	Severe VSL
					~~inoperable or damaged could result in instability, uncontrolled separation, or Cascading within an Interconnection failed to perform a subsequent risk assessment.~~
R1.	~~Long-term Planning~~	The Transmission Owner identified each applicable Transmission station(s) or Transmission substation(s) per Attachment 1, but did so after 36 calendar months, but less than or equal to 38 calendar months. OR The Transmission Owner identified each applicable Transmission station(s) or Transmission substation(s), but failed to identify less than or equal to 10% of the applicable Transmission station(s) or Transmission	The Transmission Owner identified each applicable Transmission station(s) or Transmission substation(s) per Attachment 1, but did so after 38 calendar months, but less than or equal to 40 calendar months. OR The Transmission Owner identified each applicable Transmission station(s) or Transmission substation(s), but failed to identify more than 10% and less than or equal to 20% of the applicable Transmission	The Transmission Owner identified each applicable Transmission station(s) or Transmission substation(s) per Attachment 1, but did so after 40 calendar months, but less than or equal to 42 calendar months. OR The Transmission Owner identified each applicable Transmission station(s) or Transmission substation(s), but failed to identify more than 20% and less than or equal to 30% of the applicable Transmission	The Transmission Owner failed to identify each applicable Transmission station(s) or Transmission substation(s) per Attachment 1. OR The Transmission Owner identified each applicable Transmission station(s) or Transmission substation(s) per Attachment 1, but did so after more than 42 calendar months. OR The Transmission Owner identified each applicable

~~R #~~	~~Time Horizon~~	~~VRF High~~ Violation Severity Levels ~~(CIP-014-3)~~			
		Lower VSL	Moderate VSL	High VSL	Severe VSL
		substation(s) per Attachment 1.	station(s) or Transmission substation(s) per Attachment 1.	station(s) or Transmission substation(s) per Attachment 1.	Transmission station(s) or Transmission substation(s), but failed to identify more than 30% of the applicable Transmission station(s) or Transmission substation(s) per Attachment 1.

	Violation Severity Levels			
	Lower VSL	Moderate VSL	High VSL	Severe VSL
R2.	N/A	N/A	N/A	The Transmission Owner did not identify proximate Transmission station(s) and Transmission substation(s), irrespective of ownership, within 1500 feet or 457 meters (the shortest distance, measured substation fence line to substation fence line) of an applicable Transmission station

				or Transmission substation identified in Requirement R1.
R3.	The Transmission Owner has a risk assessment methodology that failed to include one of the requirements listed in Parts 3.1 through 3.4.	The Transmission Owner has a risk assessment methodology that failed to include two of the requirements listed in Parts 3.1 through 3.4.	The Transmission Owner has a risk assessment methodology that failed to include three of the requirements listed in Parts 3.1 through 3.4.	The Transmission Owner has a risk assessment methodology that failed to include four of the requirements listed in Parts 3.1 through 3.4. OR The Transmission Owner does not have a risk assessment methodology.

	Violation Severity Levels			
	Lower VSL	**Moderate VSL**	**High VSL**	**Severe VSL**
R4.	The Transmission Owner with applicable Transmission station(s) and Transmission substation(s) identified in Requirement R1 containing Bulk Electric System (BES) Elements owned by multiple Transmission Owners failed to coordinate with each appropriate Transmission Owner(s) to determine and document their individual and joint responsibilities for documenting a risk assessment methodology under Requirement R3 and for performing any required risk assessments per Requirement R5 for less than or equal to 25% of jointly owned applicable Transmission station(s) and Transmission substation(s).	The Transmission Owner with applicable Transmission station(s) and Transmission substation(s) identified in Requirement R1 containing Bulk Electric System (BES) Elements owned by multiple Transmission Owners failed to coordinate with each appropriate Transmission Owner(s) to determine and document their individual and joint responsibilities for documenting a risk assessment methodology under Requirement R3 and for performing any required risk assessments per Requirement R5 for more than 25% and less than or equal to 50% of jointly owned applicable Transmission station(s) and Transmission substation(s).	The Transmission Owner with applicable Transmission station(s) and Transmission substation(s) identified in Requirement R1 containing Bulk Electric System (BES) Elements owned by multiple Transmission Owners failed to coordinate with each appropriate Transmission Owner(s) to determine and document their individual and joint responsibilities for documenting a risk assessment methodology under Requirement R3 and for performing any required risk assessments per Requirement R5 for more than 50% and less than or equal to 75% of jointly owned applicable Transmission station(s) and Transmission substation(s).	The Transmission Owner with applicable Transmission station(s) and Transmission substation(s) identified in Requirement R1 containing Bulk Electric System (BES) Elements owned by multiple Transmission Owners failed to coordinate with each appropriate Transmission Owner(s) to determine and document their individual and joint responsibilities for documenting a risk assessment methodology under Requirement R3 and for performing any required risk assessments per Requirement R5 for more than 75% and less than or equal to 100% any evidence of jointly owned applicable Transmission station(s) and Transmission substation(s).
R5.	The Transmission Owner performed a risk assessment, but did so after 36 calendar	The Transmission Owner performed a risk assessment, but did so after 38 calendar	The Transmission Owner performed a risk assessment, but did so after 40 calendar	The Transmission Owner performed a risk assessment, but did so after more than 42 calendar months.

	Violation Severity Levels			
	Lower VSL	**Moderate VSL**	**High VSL**	**Severe VSL**
	months, but less than or equal to 38 calendar months. OR The Transmission Owner performed a risk assessment inconsistent with one of the methodology requirements listed in Requirement R3, Parts 3.1 through 3.4.	months, but less than or equal to 40 calendar months. OR The Transmission Owner performed a risk assessment inconsistent with two of the methodology requirements listed in Requirement R3, Parts 3.1 through 3.4.	months, but less than or equal to 42 calendar months. OR The Transmission Owner performed a risk assessment inconsistent with three of the methodology requirements listed in Requirement R3, Parts 3.1 through 3.4. OR The Transmission Owner performed a risk assessment but failed to include the primary control center identified in Part 5.2.	OR The Transmission Owner performed a risk assessment inconsistent with four of the methodology requirements listed in Requirement R3, Parts 3.1 through 3.4.
~~**R2** **Long-term Planning** **Medium**~~**R6.**	The Transmission Owner had an unaffiliated third party verify the risk assessment performed under Requirement ~~R1~~R5, but did so in more than 90 calendar days, but less than or equal to 100 calendar days following completion of Requirement ~~R1;~~R5.	The Transmission Owner had an unaffiliated third party verify the risk assessment performed under Requirement ~~R1~~R5, but did so more than 100 calendar days, but less than or equal to 110 calendar days following completion of Requirement ~~R1;~~R5.	The Transmission Owner had an unaffiliated third party verify the risk assessment performed under Requirement ~~R1~~R5, but did so more than 110 calendar days, but less than or equal to 120 calendar days following completion of Requirement ~~R1;~~R5.	The Transmission Owner had an unaffiliated third party verify the risk assessment performed under Requirement ~~R1~~R5, but did so more than 120 calendar days following completion of Requirement ~~R1;~~R5. OR

	Violation Severity Levels			
	Lower VSL	**Moderate VSL**	**High VSL**	**Severe VSL**
	OR The Transmission Owner had an unaffiliated third party verify the risk assessment performed under Requirement ~~R1~~R5 and modified or documented the technical basis for not modifying its identification under Requirement ~~R1~~R5 as required by ~~Part 2.3~~Part6.3, but did so more than 60 calendar days and less than or equal to 70 calendar days from completion of the third party verification.	~~Or~~OR The Transmission Owner had an unaffiliated third party verify the risk assessment performed under Requirement ~~R1~~R5 and modified or documented the technical basis for not modifying its identification under Requirement ~~R1~~R5 as required by ~~Part 2.3~~Part6.3, but did so more than 70 calendar days and less than or equal to 80 calendar days from completion of the third party verification.	OR The Transmission Owner had an unaffiliated third party verify the risk assessment performed under Requirement ~~R1~~R5 and modified or documented the technical basis for not modifying its identification under Requirement ~~R1~~R5 as required by Part ~~2.3~~6.3, but did so more than 80 calendar days from completion of the third party verification~~;~~. OR The Transmission Owner had an unaffiliated third party verify the risk assessment performed under Requirement ~~R1~~R5, but failed to modify or document the technical basis for not modifying its identification under ~~R1~~R4 as required by Part ~~2.3~~6.3.	The Transmission Owner failed to have an unaffiliated third party verify the risk assessment performed under Requirement ~~R1;~~R5. OR The Transmission Owner had an unaffiliated third party verify the risk assessment performed under Requirement ~~R1~~R5, but failed to implement procedures for protecting information per Part ~~2.4~~6.4.
~~**R3**~~	The Transmission Owner notified the Transmission	The Transmission Owner notified the Transmission	The Transmission Owner notified the Transmission	The Transmission Owner notified the Transmission

	Violation Severity Levels			
	Lower VSL	Moderate VSL	High VSL	Severe VSL
~~Long-term Planning~~ ~~Lower~~R7.	Operator that operates the primary control center as specified in Requirement ~~R3~~R7, but did so more than seven calendar days and less than or equal to nine calendar days following the completion of Requirement ~~R2;~~R6. OR The Transmission Owner notified the Transmission Operator that operates the primary control center of the removal from the identification in Requirement ~~R1~~R5, but did so more than seven calendar days and less than or equal to nine calendar days following the verification or the subsequent risk assessment.	Operator that operates the primary control center as specified in Requirement ~~R3~~R7, but did so more than nine calendar days and less than or equal to 11 calendar days following the completion of Requirement ~~R2;~~R6. OR The Transmission Owner notified the Transmission Operator that operates the primary control center of the removal from the identification in Requirement ~~R1~~R5, but did so more than nine calendar days and less than or equal to 11 calendar days following the verification or the subsequent risk assessment.	Operator that operates the primary control center as specified in Requirement ~~R3~~R7, but did so more than 11 calendar days and less than or equal to 13 calendar days following the completion of Requirement ~~R2;~~R6. OR The Transmission Owner notified the Transmission Operator that operates the primary control center of the removal from the identification in Requirement ~~R1~~R5, but did so more than 11 calendar days and less than or equal to 13 calendar days following the verification or the subsequent risk assessment.	Operator that operates the primary control center as specified in Requirement ~~R3~~R7, but did so more than 13 calendar days following the completion of Requirement ~~R2;~~R6. OR The Transmission Owner failed to notify the Transmission Operator that it operates a control center identified in Requirement ~~R1;~~R5. OR The Transmission Owner notified the Transmission Operator that operates the primary control center of the removal from the identification in Requirement ~~R1~~R5, but did so more than 13 calendar days following the verification or the subsequent risk assessment. OR The Transmission Owner failed to notify the

	Violation Severity Levels			
	Lower VSL	Moderate VSL	High VSL	Severe VSL
				Transmission Operator that operates the primary control center of the removal from the identification in Requirement ~~R1~~R5.

		Violation Severity Levels			
		Lower VSL	Moderate VSL	High VSL	Severe VSL
~~R4~~R8.	~~Operations Planning, Long-term Planning~~	~~Medium~~ N/A	The ~~Responsible Entity~~responsible entity conducted an evaluation of the potential physical threats and vulnerabilities to each of its Transmission station(s), Transmission substation(s), and primary control center(s) identified in Requirement ~~R1~~R5, but failed to consider one of Parts ~~4.1~~8.1 through ~~4.3~~8.3 in the evaluation.	The ~~Responsible Entity~~responsible entity conducted an evaluation of the potential physical threats and vulnerabilities to each of its Transmission station(s), Transmission substation(s), and primary control center(s) identified in Requirement ~~R1~~R5, but failed to consider two of Parts ~~4.1~~8.1 through ~~4.3~~8.3 in the evaluation.	The ~~Responsible Entity~~responsible entity failed to conduct an evaluation of the potential physical threats and vulnerabilities to each of its Transmission station(s), Transmission substation(s), and primary control center(s) identified in Requirement ~~R1;~~R5. OR The ~~Responsible Entity~~responsible entity conducted an evaluation of the potential physical threats and vulnerabilities to each of its Transmission station(s), Transmission substation(s), and primary control center(s) identified in Requirement ~~R1~~R5, but failed to consider Parts ~~4.1~~8.1 through ~~4.3~~8.3.

		Violation Severity Levels			
		Lower VSL	Moderate VSL	High VSL	Severe VSL
~~R5~~R9.	~~Long-term Planning~~	~~High~~ The ~~Responsible Entity~~responsible entity developed and implemented a documented physical security plan(s) that covers each of its Transmission station(s), Transmission substation(s), and primary control center(s) identified in Requirement ~~R1~~R5, but did so more than 120 calendar days, but less than or equal to 130 calendar days after completing Requirement ~~R2;~~ R6. OR The ~~Responsible Entity~~responsible entity developed and implemented a documented physical security plan(s) that covers its Transmission station(s), Transmission substation(s), and primary control center(s) identified in Requirement ~~R1~~R5 and	The ~~Responsible Entity~~responsible entity developed and implemented a documented physical security plan(s) that covers each of its Transmission station(s), Transmission substation(s), and primary control center(s) identified in Requirement ~~R1~~R5, but did so more than 130 calendar days, but less than or equal to 140 calendar days after completing Requirement ~~R2;~~R6. OR The ~~Responsible Entity~~responsible entity developed and implemented a documented physical security plan(s) that covers its Transmission station(s), Transmission substation(s), and primary control center(s) identified in Requirement ~~R1~~R5 and verified according to Requirement ~~R2~~R6, but	The ~~Responsible Entity~~responsible entity developed and implemented a documented physical security plan(s) that covers each of its Transmission station(s), Transmission substation(s), and primary control center(s) identified in Requirement ~~R1~~R5, but did so more than 140 calendar days, but less than or equal to 150 calendar days after completing Requirement ~~R2;~~R6. OR The ~~Responsible Entity~~responsible entity developed and implemented a documented physical security plan(s) that covers its Transmission station(s), Transmission substation(s), and primary control center(s) identified in Requirement ~~R1~~R5 and verified according to Requirement ~~R2~~R6, but	The ~~Responsible Entity~~responsible entity developed and implemented a documented physical security plan(s) that covers each of its Transmission station(s), Transmission substation(s), and primary control center(s) identified in Requirement ~~R1~~R5, but did so more than 150 calendar days after completing the verification in Requirement ~~R2;~~ R6. OR The ~~Responsible Entity~~responsible entity failed to develop and implement a documented physical security plan(s) that covers its Transmission station(s), Transmission substation(s), and primary control center(s) identified in Requirement ~~R1~~R5 and verified according to Requirement ~~R2~~R6.

		Violation Severity Levels			
		Lower VSL	**Moderate VSL**	**High VSL**	**Severe VSL**
		verified according to Requirement ~~R2~~R6, but failed to include one of Parts ~~5.1~~9.1 through ~~5.4~~9.4 in the plan.	failed to include two of Parts ~~5.1~~9.1 through ~~5.4~~9.4 in the plan.	failed to include three of Parts ~~5.1~~9.1 through ~~5.4~~9.4 in the plan.	OR The ~~Responsible Entity~~responsible entity developed and implemented a documented physical security plan(s) that covers its Transmission station(s), Transmission substation(s), and primary control center(s) identified in Requirement ~~R1~~R5 and verified according to Requirement ~~2~~R6, but failed to include Parts ~~5.1~~9.1 through ~~5.4~~9.4 in the plan.
~~R6~~R10.	**~~Long-term Planning~~**	**~~Medium~~** The ~~Responsible Entity~~responsible entity had an unaffiliated third party review the evaluation performed under Requirement ~~R4~~R8 and the security plan(s) developed under Requirement ~~R5~~R9, but did so in more than 90 calendar days, but less than or equal to 100 calendar days~~;~~.	The ~~Responsible Entity~~responsible entity had an unaffiliated third party review the evaluation performed under Requirement ~~R4~~R8 and the security plan(s) developed under Requirement ~~R5~~R9, but did so in more than 100 calendar days, but less than or equal to 110 calendar days~~;~~. OR	The ~~Responsible Entity~~responsible entity had an unaffiliated third party review the evaluation performed under Requirement ~~R4~~R8 and the security plan(s) developed under Requirement ~~R5~~R9, but did so more than 110 calendar days, but less than or equal to 120 calendar days~~;~~. OR	The ~~Responsible Entity~~responsible entity failed to have an unaffiliated third party review the evaluation performed under Requirement ~~R4~~R8 and the security plan(s) developed under Requirement ~~R5~~R9 in more than 120 calendar days~~;~~. ~~OR~~

		Violation Severity Levels			
		Lower VSL	**Moderate VSL**	**High VSL**	**Severe VSL**
		OR The ~~Responsible Entity~~responsible entity had an unaffiliated third party review the evaluation performed under Requirement ~~R4~~R8 and the security plan(s) developed under Requirement ~~R5~~R9 and modified or documented the reason for not modifying the security plan(s) as specified in Part ~~6.3~~10.3, but did so more than ~~60~~70 calendar days and less than or equal to ~~70~~80 calendar days following completion of the third party review.	The ~~Responsible Entity~~responsible entity had an unaffiliated third party review the evaluation performed under Requirement ~~R4~~R8 and the security plan(s) developed under Requirement ~~R5~~R9 and modified or documented the reason for not modifying the security plan(s) as specified in Part ~~6.3~~10.3, but did so more than ~~70 calendar days and less than or equal to~~ 80 calendar days following completion of the third party review. OR The responsible entity had an unaffiliated third party review the evaluation performed under Requirement R8 and the security plan(s) developed under Requirement R9, but did not document the reason for not modifying	The ~~Responsible Entity had~~responsible entity failed to have an unaffiliated third party review the evaluation performed under Requirement ~~R4~~R8 and the security plan(s) developed under Requirement ~~R5 and modified or documented the reason for not modifying the security plan(s) as specified in Part 6.3 but did so more than 80 calendar days following completion of the third party review;~~R9. OR The ~~Responsible Entity~~responsible entity had an unaffiliated third party review the evaluation performed under Requirement ~~R4~~R8 and the security plan(s) developed under Requirement ~~R5~~R9, but ~~did not document the reason for not modifying the security plan(s) as specified in~~failed to	~~The Responsible Entity failed to have an unaffiliated third party review the evaluation performed under Requirement R4 and the security plan(s) developed under Requirement R5;~~ ~~OR~~ ~~The Responsible Entity had an unaffiliated third party review the evaluation performed under Requirement R4 and the security plan(s) developed under Requirement R5 but failed to implement procedures for protecting information per Part 6.4.~~

		Violation Severity Levels			
		Lower VSL	Moderate VSL	High VSL	Severe VSL
			the security plan(s) as specified in Part 10.3.	implement procedures for protecting information per Part ~~6.3~~10.4.	

D. Regional Variances

None.

E. Interpretations

None.

F. Associated Documents

~~None.~~

CIP-014-4 Implementation Plan

CIP-014-4 Technical Rationale Document

Version History

Version	Date	Action	Change Tracking
1	October 1, 2015	Effective Date	New
2	April 16, 2015	Revised to meet FERC Order 802 directive to remove “widespread”.	Revision
2	May 7, 2015	Adopted by the NERC Board of Trustees	
2	July 14, 2015	FERC Letter Order in Docket No. RD15-4-000 approving CIP-014-2	
3	January 19, 2022	Revised to remove Compliance Section 1.4	Revision
3	June 16, 2022	FERC Letter Order in Docket No. RD22-3-000 approving Modifications to CIP-014-3	Revision
3	June 16,2022	Effective Date	Revision
4	TBD	Revisions made by the Project 2023-06 drafting team	Revision

Guidelines and Technical Basis

Section 4Attachment 1 — Applicability Criteria

The purpose of Reliability Standard CIP-014 is to protect Transmission stations and Transmission substations, and their associated primary control centers that if rendered inoperable or damaged as a result of a physical attack could result in instability, uncontrolled separation, or Cascading within an Interconnection. To properly include those entities that own or operate such Facilities, the Reliability Standard CIP-014 first applies to Transmission Owners that own Transmission Facilities that meet the specific criteria in Applicability Section 4.1.1.1 through 4.1.1.4. The Facilities described in Applicability Section 4.1.1.1 through 4.1.1.4 mirror those Transmission Facilities that meet the bright line criteria for "Medium Impact" Transmission Facilities under Attachment 1 of Reliability Standard CIP-002-5.1. Each Transmission Owner that owns Transmission Facilities that meet the criteria in Section 4.1.1.1 through 4.1.1.4 is required to perform a risk assessment as specified in Requirement R1 to identify its Transmission stations and Transmission substations, and their associated primary control centers, that if rendered inoperable or damaged as a result of a physical attack could result in instability, uncontrolled separation, or Cascading within an Interconnection. The Standard Drafting Team (SDT) expects this population will be small and that many Transmission Owners that meet the applicability of this standard will not actually identify any such Facilities. Only those Transmission Owners with Transmission stations or Transmission substations identified in the risk assessment (and verified under Requirement R2) have performance obligations under Requirements R3 through R6.

This standard also applies to Transmission Operators. A Transmission Operator's obligations under the standard, however, are only triggered if the Transmission Operator is notified by an applicable Transmission Owner under Requirement R3 that the Transmission Operator operates a primary control center that operationally controls a Transmission station(s) or Transmission substation(s) identified in the Requirement R1 risk assessment. A primary control center operationally controls a Transmission station or Transmission substation when the control center's electronic actions can cause direct physical action at the identified Transmission station or Transmission substation, such as opening a breaker, as opposed to a control center that only has information from the Transmission station or Transmission substation and must coordinate direct action through another entity. Only Transmission Operators who are notified that they have primary control centers under this standard have performance obligations under Requirements R4 through R6. In other words, primary control center for purposes of this Standard is the control center that the Transmission Owner or Transmission Operator, respectively, uses as its primary, permanently-manned site to physically operate a Transmission station or Transmission substation that is identified in Requirement R1 and verified in Requirement R2. Control centers that provide back-up capability are not applicable, as they are a form of resiliency and intentionally redundant.

The SDT considered several options for bright line criteria that could be used to determine applicability and provide an initial threshold that defines the set of Transmission stations and Transmission substations that would meet the directives of the FERC order on physical security (*i.e.*, those that could cause instability, uncontrolled separation, or Cascading within an

Interconnection). The SDT determined that using the criteria for Medium Impact Transmission Facilities in Attachment 1 of CIP-002-5.1 would provide a conservative threshold for defining which Transmission stations and Transmission substations must be included in the risk assessment in Requirement R1 of CIP-014. Additionally, the SDT concluded that using the CIP-002-5.1 Medium Impact criteria was appropriate because it has been approved by stakeholders, NERC, and FERC, and its use provides a technically sound basis to determine which Transmission Owners should conduct the risk assessment. As described in CIP-002-5.1, the failure of a Transmission station or Transmission substation that meets the Medium Impact criteria could have the capability to result in exceeding one or more Interconnection Reliability Operating Limits (IROLs). The SDT understands that using this bright line criteria to determine applicability may require some Transmission Owners to perform risk assessments under Requirement R1 that will result in a finding that none of their Transmission stations or Transmission substations would pose a risk of instability, uncontrolled separation, or Cascading within an Interconnection. However, the SDT determined that higher bright lines could not be technically justified to ensure inclusion of all Transmission stations and Transmission substations, and their associated primary control centers that, if rendered inoperable or damaged as a result of a physical attack could result in instability, uncontrolled separation, or Cascading within an Interconnection. Further guidance and technical basis for the bright line criteria for Medium Impact Facilities can be found in the Guidelines and Technical Basis section of CIP-002-5.1.

Additionally, the SDT determined that it was not necessary to include Generator Operators and Generator Owners in the Reliability Standard. First, Transmission stations or Transmission substations interconnecting generation facilities are considered when determining applicability. Transmission Owners will consider those Transmission stations and Transmission substations that include a Transmission station on the high side of the Generator Step-up transformer (GSU) using Applicability Section 4.1.1.1 and 4.1.1.2. As an example, a Transmission station or Transmission substation identified as a Transmission Owner facility that interconnects generation will be subject to the Requirement R1 risk assessment if it operates at 500kV or greater or if it is connected at 200 kV – 499kV to three or more other Transmission stations or Transmission substations and has an "aggregate weighted value" exceeding 3000 according to the table in Applicability Section 4.1.1.2. Second, the Transmission analysis or analyses conducted under Requirement R1 should take into account the impact of the loss of generation connected to applicable Transmission stations or Transmission substations. Additionally, the FERC order does not explicitly mention generation assets and is reasonably understood to focus on the most critical Transmission Facilities. The diagram below shows an example of a station.

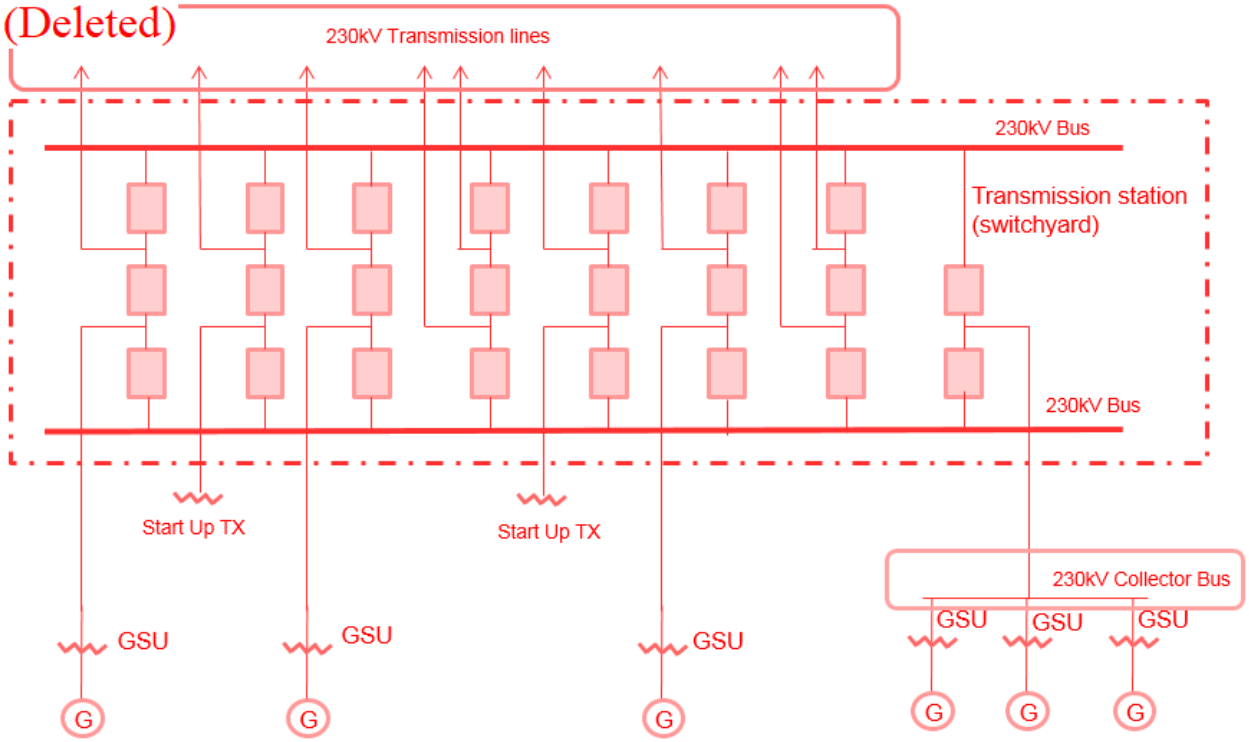

Also, the SDT uses the phrase "Transmission stations or Transmission substations" to recognize the existence of both stations and substations. Many entities in industry consider a substation to be a location with physical borders (i.e. fence, wall, etc.) that contains at least an autotransformer. Locations also exist that do not contain autotransformers, and many entities in industry refer to those locations as stations (switching stations or switchyards). Therefore, the SDT chose to use both "station" and "substation" to refer to the locations where groups of Transmission Facilities exist.

On the issue of joint ownership, the SDT recognizes that this issue is not unique to CIP-014, and expects that the applicable Transmission Owners and Transmission Operators will develop memorandums of understanding, agreements, Coordinated Functional Registrations, or procedures, etc., to designate responsibilities under CIP-014 when joint ownership is at issue, which is similar to what many entities have completed for other Reliability Standards.

The language contained in the applicability section regarding the collector bus is directly copied from CIP-002-5.1, Attachment 1, and has no additional meaning within the CIP-014 standard.

Requirement R1

The initial risk assessment required under Requirement R1 must be completed on or before the effective date of the standard. Subsequent risk assessments are to be performed at least once every 30 or 60 months depending on the results of the previous risk assessment per Requirement R1, Part 1.1. In performing the risk assessment under Requirement R1, the Transmission Owner should first identify their population of Transmission stations and Transmission substations that meet the criteria contained in Applicability Section 4.1.1.

Requirement R1 then requires the Transmission Owner to perform a risk assessment, consisting of a transmission analysis, to determine which of those Transmission stations and Transmission Substations if rendered inoperable or damaged could result in instability, uncontrolled separation, or Cascading within an Interconnection. The requirement is not to require identification of, and thus, not intended to bring within the scope of the standard a Transmission station or Transmission substation unless the applicable Transmission Owner determines through technical studies and analyses based on objective analysis, technical expertise, operating experience and experienced judgment that the loss of such facility would have a critical impact on the operation of the Interconnection in the event the asset is rendered inoperable or damaged. In the November 20, 2014 Order, FERC reiterated that "only an instability that has a "critical impact on the operation of the interconnection" warrants finding that the facility causing the instability is critical under Requirement R1." The Transmission Owner may determine the criteria for critical impact by considering, among other criteria, any of the following:

- Criteria or methodology used by Transmission Planners or Planning Coordinators in TPL-001-4, Requirement R6
- NERC EOP-004-2 reporting criteria
- Area or magnitude of potential impact

The standard does not mandate the specific analytical method for performing the risk assessment. The Transmission Owner has the discretion to choose the specific method that best suites its needs. As an example, an entity may perform a Power Flow analysis and stability analysis at a variety of load levels.

Performing Risk Assessments

The Transmission Owner has the discretion to select a transmission analysis method that fits its facts and system circumstances. To mandate a specific approach is not technically desirable and may lead to results that fail to adequately consider regional, topological, and system circumstances. The following guidance is only an example on how a Transmission Owner may perform a power flow and/or stability analysis to identify those Transmission stations and Transmission substations that if rendered inoperable or damaged as a result of a physical attack could result in instability, uncontrolled separation, or Cascading within an Interconnection. An entity could remove all lines, without regard to the voltage level, to a single Transmission station or Transmission substation and review the simulation results to assess system behavior to determine if Cascading of Transmission Facilities, uncontrolled separation, or voltage or frequency instability is likely to occur over a significant area of the Interconnection. Using engineering judgment, the Transmission Owner (possibly in consultation with regional planning or operation committees and/or ISO/RTO committee input) should develop criteria (e.g. imposing a fault near the removed Transmission station or Transmission substation) to identify a contingency or parameters that result in potential instability, uncontrolled separation, or Cascading within an Interconnection. Regional consultation on these matters is likely to be helpful and informative, given that the inputs for the risk assessment and the attributes of what constitutes instability, uncontrolled separation, or Cascading within an Interconnection will

likely vary from region-to-region or from ISO-to-ISO based on topology, system characteristics, and system configurations. Criteria could also include post-contingency facilities loadings above a certain emergency rating or failure of a power flow case to converge. Available special protection systems (SPS), if any, could be applied to determine if the system experiences any additional instability which may result in uncontrolled separation. Example criteria may include:

(a) Thermal overloads beyond facility emergency ratings;

(b) Voltage deviation exceeding ± 10%; or

(c) Cascading outage/voltage collapse; or

(d) Frequency below under-frequency load shed points

Periodicity

A Transmission Owner who identifies one or more Transmission stations or Transmission substations (as verified under Requirement R2) that if rendered inoperable or damaged could result in instability, uncontrolled separation, or Cascading within an Interconnection is required to conduct a risk assessment at least once every 30 months. This period ensures that the risk assessment remains current with projected conditions and configurations in the planned system. This risk assessment, as the initial assessment, must consider applicable planned Transmission stations and Transmission substations to be in service within 24 months. The 30 month timeframe aligns with the 24 month planned to be in service date because the Transmission Owner is provided the flexibility, depending on its planning cycle and the frequency in which it may plan to construct a new Transmission station or Transmission substation to more closely align these dates. The requirement is to conduct the risk assessment at least once every 30 months, so for a Transmission Owner that believes it is better to conduct a risk assessment once every 24 months, because of its planning cycle, it has the flexibility to do so.

Transmission Owners that have not identified any Transmission stations or Transmission substations (as verified under Requirement R2) that if rendered inoperable or damaged could result in instability, uncontrolled separation, or Cascading within an Interconnection are unlikely to see changes to their risk assessment in the Near-Term Planning Horizon. Consequently, a 60 month periodicity for completing a subsequent risk assessment is specified.

Identification of Primary Control Centers

After completing the risk assessment specified in Requirement R1, it is important to additionally identify the primary control center that operationally controls each Transmission station or Transmission substation that if rendered inoperable or damaged could result in instability, uncontrolled separation, or Cascading within an Interconnection. A primary control center "operationally controls" a Transmission station or Transmission substation when the control center's electronic actions can cause direct physical actions at the identified Transmission station and Transmission substation, such as opening a breaker.

Requirement R2

This requirement specifies verification of the risk assessment performed under Requirement R1 by an entity other than the owner or operator of the Requirement R1 risk assessment.

A verification of the risk assessment by an unaffiliated third party, as specified in Requirement R2, could consist of:

1. Certifying that the Requirement R1 risk assessment considers the Transmission stations and Transmission substations identified in Applicability Section 4.1.1.
2. Review of the model used to conduct the risk assessment to ensure it contains sufficient system topology to identify Transmission stations and Transmission substations that if rendered inoperable or damaged could cause instability, uncontrolled separation, or Cascading within an Interconnection.
3. Review of the Requirement R1 risk assessment methodology.

This requirement provides the flexibility for a Transmission Owner to select from unaffiliated registered and non-registered entities with transmission planning or analysis experience to perform the verification of the Requirement R1 risk assessment. The term unaffiliated means that the selected verifying entity cannot be a corporate affiliate (*i.e.,* the verifying or third party reviewer cannot be an entity that corporately controls, is controlled by or is under common control with, the Transmission Owner). The verifying entity also cannot be a division of the Transmission Owner that operates as a functional unit.

The prohibition on registered entities using a corporate affiliate to conduct the verification, however, does not prohibit a governmental entity (e.g., a city, a municipality, a U.S. federal power marketing agency, or any other political subdivision of U.S. or Canadian federal, state, or provincial governments) from selecting as the verifying entity another governmental entity within the same political subdivision. For instance, a U.S. federal power marketing agency may select as its verifier another U.S. federal agency to conduct its verification so long as the selected entity has transmission planning or analysis experience. Similarly, a Transmission Owner owned by a Canadian province can use a separate agency of that province to perform the verification. The verifying entity, however, must still be a third party and cannot be a division of the registered entity that operates as a functional unit.

Requirement R2 also provides that the "verification may occur concurrent with or after the risk assessment performed under Requirement R1." This provision is designed to provide the Transmission Owner the flexibility to work with the verifying entity throughout (*i.e.,* concurrent with) the risk assessment, which for some Transmission Owners may be more efficient and effective. In other words, a Transmission Owner could collaborate with their unaffiliated verifying entity to perform the risk assessment under Requirement R1 such that both Requirement R1 and Requirement R2 are satisfied concurrently. The intent of Requirement R2 is to have an entity other than the owner or operator of the facility to be involved in the risk assessment process and have an opportunity to provide input. Accordingly, Requirement R2 is designed to allow entities the discretion to have a two-step process, where the Transmission Owner performs the risk assessment and subsequently has a third-party review that

assessment, or a one-step process, where the entity collaborates with a third party to perform the risk assessment.

Characteristics to consider in selecting a third party reviewer could include:

- Registered Entity with applicable planning and reliability functions.
- Experience in power system studies and planning.
- The entity's understanding of the MOD standards, TPL standards, and facility ratings as they pertain to planning studies.
- The entity's familiarity with the Interconnection within which the Transmission Owner is located.

With respect to the requirement that Transmission owners develop and implement procedures for protecting confidential and sensitive information, the Transmission Owner could have a method for identifying documents that require confidential treatment. One mechanism for protecting confidential or sensitive information is to prohibit removal of sensitive or confidential information from the Transmission Owner's site. Transmission Owners could include such a prohibition in a non-disclosure agreement with the verifying entity.

A Technical feasibility study is not required in the Requirement R2 documentation of the technical basis for not modifying the identification in accordance with the recommendation.

On the issue of the difference between a verifier in Requirement R2 and a reviewer in Requirement R6, the SDT indicates that the verifier will confirm that the risk assessment was completed in accordance with Requirement R1, including the number of Transmission stations and substations identified, while the reviewer in Requirement R6 is providing expertise on the manner in which the evaluation of threats was conducted in accordance with Requirement R4, and the physical security plan in accordance with Requirement R5. In the latter situation there is no verification of a technical analysis, rather an application of experience and expertise to provide guidance or recommendations, if needed.

Parts 2.4 and 6.4 require the entities to have procedures to protect the confidentiality of sensitive or confidential information. Those procedures may include the following elements:

1. Control and retention of information on site for third party verifiers/reviewers.
2. Only "need to know" employees, etc., get the information.
3. Marking documents as confidential
4. Securely storing and destroying information when no longer needed.
5. Not releasing information outside the entity without, for example, General Counsel sign-off.

Requirement R3

Some Transmission Operators will have obligations under this standard for certain primary control centers. Those obligations, however, are contingent upon a Transmission Owner first completing the risk assessment specified by Requirement R1 and the verification specified by

Requirement R2. Requirement R3 is intended to ensure that a Transmission Operator that has operational control of a primary control center identified in Requirement R1 receive notice so that the Transmission Operator may fulfill the rest of the obligations required in Requirements R4 through R6. Since the timing obligations in Requirements R4 through R6 are based upon completion of Requirement R2, the Transmission Owner must also include within the notice the date of completion of Requirement R2. Similarly, the Transmission Owner must notify the Transmission Operator of any removals from identification that result from a subsequent risk assessment under Requirement R1 or as a result of the verification process under Requirement R2.

Requirement R4

This requirement requires owners and operators of facilities identified by the Requirement R1 risk assessment and that are verified under Requirement R2 to conduct an assessment of potential threats and vulnerabilities to those Transmission stations, Transmission substations, and primary control centers using a tailored evaluation process. Threats and vulnerabilities may vary from facility to facility based on any number of factors that include, but are not limited to, location, size, function, existing physical security protections, and attractiveness as a target.

In order to effectively conduct a threat and vulnerability assessment, the asset owner may be the best source to determine specific site vulnerabilities, but current and evolving threats may best be determined by others in the intelligence or law enforcement communities. A number of resources have been identified in the standard, but many others exist and asset owners are not limited to where they may turn for assistance. Additional resources may include state or local fusion centers, U.S. Department of Homeland Security, Federal Bureau of Investigations (FBI), Public Safety Canada, Royal Canadian Mounted Police, and InfraGard chapters coordinated by the FBI.

The Responsible Entity is required to take a number of factors into account in Parts 4.1 to 4.3 in order to make a risk-based evaluation under Requirement R4.

To assist in determining the current threat for a facility, the prior history of attacks on similarly protected facilities should be considered when assessing probability and likelihood of occurrence at the facility in question.

Resources that may be useful in conducting threat and vulnerability assessments include:

- NERC Security Guideline for the Electricity Sector: Physical Security.
- NERC Security Guideline: Physical Security Response.
- ASIS International General Risk Assessment Guidelines.
- ASIS International Facilities Physical Security Measure Guideline.
- ASIS International Security Management Standard: Physical Asset Protection.
- Whole Building Design Guide - Threat/Vulnerability Assessments.

Requirement R5

This requirement specifies development and implementation of a security plan(s) designed to protect against attacks to the facilities identified in Requirement R1 based on the assessment performed under Requirement R4.

Requirement R5 specifies the following attributes for the physical security plan:

- *Resiliency or security measures designed collectively to deter, detect, delay, assess, communicate, and respond to potential physical threats and vulnerabilities identified during the evaluation conducted in Requirement R4.*

  Resiliency may include, among other things:

  a. System topology changes,

  b. Spare equipment,

  c. Construction of a new Transmission station or Transmission substation.

  While most security measures will work together to collectively harden the entire site, some may be allocated to protect specific critical components. For example, if protection from gunfire is considered necessary, the entity may only install ballistic protection for critical components, not the entire site.

- *Law enforcement contact and coordination information.*

  Examples of such information may be posting 9-1-1 for emergency calls and providing substation safety and familiarization training for local and federal law enforcement, fire department, and Emergency Medical Services.

- *A timeline for executing the physical security enhancements and modifications specified in the physical security plan.*

  Entities have the flexibility to prioritize the implementation of the various resiliency or security enhancements and modifications in their security plan according to risk, resources, or other factors. The requirement to include a timeline in the physical security plan for executing the actual physical security enhancements and modifications does not also require that the enhancements and modifications be completed within 120 days. The actual timeline may extend beyond the 120 days, depending on the amount of work to be completed.

- *Provisions to evaluate evolving physical threats, and their corresponding security measures, to the*Applicable Transmission station(s), or Transmission substation(s)*, or primary control center(s).* are those that meet any of the following criteria:

1. Transmission Facilities operated at 500 kV or higher. For the purpose of this criterion, the collector bus for a generation plant is not considered a Transmission Facility, but is part of the generation interconnection Facility.

2. Transmission Facilities that are operating between 200 kV and 499 kV at a single station or substation, where the station or substation is connected at 200 kV or higher voltages to three or more other Transmission stations or substations and has an "aggregate weighted

value" exceeding 3000 according to the table below. The "aggregate weighted value" for a single station or substation is determined by summing the "weight value per line" shown in the table below for each incoming and each outgoing BES Transmission Line that is connected to another Transmission station or substation. For the purpose of this criterion, the collector bus for a generation plant is not considered a Transmission Facility, but is part of the generation interconnection Facility.

A registered entity's physical security plan should include processes and responsibilities for obtaining and handling alerts, intelligence, and threat warnings from various sources. Some of these sources could include the ERO, ES-ISAC, and US and/or Canadian federal agencies. This information should be used to reevaluate or consider changes in the security plan and corresponding security measures of the security plan found in R5.

Incremental changes made to the physical security plan prior to the next required third party review do not require additional third party reviews.

Voltage Value of a Line	**Weight Value per Line**
less than 200 kV (not applicable)	(not applicable)
200 kV to 299 kV	700
300 kV to 499 kV	1300
500 kV and above	N/A

Requirement R6

This requirement specifies review by an entity other than the Transmission Owner or Transmission Operator with appropriate expertise for the evaluation performed according to Requirement R4 and the security plan(s) developed according to Requirement R5. As with Requirement R2, the term unaffiliated means that the selected third party reviewer cannot be a corporate affiliate (*i.e.*, the third party reviewer cannot be an entity that corporately controls, is controlled by or is under common control with, the Transmission Operator). A third party reviewer also cannot be a division of the Transmission Operator that operates as a functional unit.

As noted in the guidance for Requirement R2, the prohibition on registered entities using a corporate affiliate to conduct the review, however, does not prohibit a governmental entity from selecting as the third party reviewer another governmental entity within the same political subdivision. For instance, a city or municipality may use its local enforcement agency, so long as the local law enforcement agency satisfies the criteria in Requirement R6. The third party reviewer, however, must still be a third party and cannot be a division of the registered entity that operates as a functional unit.

The Responsible Entity can select from several possible entities to perform the review:

- *An entity or organization with electric industry physical security experience and whose review staff has at least one member who holds either a Certified Protection Professional (CPP) or Physical Security Professional (PSP) certification.*

  In selecting CPP and PSP for use in this standard, the SDT believed it was important that if a private entity such as a consulting or security firm was engaged to conduct the third-party review, they must tangibly demonstrate competence to conduct the review. This includes electric industry physical security experience and either of the premier security industry certifications sponsored by ASIS International. The ASIS certification program was initiated in 1977, and those that hold the CPP certification are board certified in security management. Those that hold the PSP certification are board certified in physical security.

- *An entity or organization approved by the ERO.*

- *A governmental agency with physical security expertise.*

- *An entity or organization with demonstrated law enforcement, government, or military physical security expertise.*

As with the verification under Requirement R2, Requirement R6 provides that the "review may occur concurrently with or after completion of the evaluation performed under Requirement R4 and the security plan development under Requirement R5." This provision is designed to provide applicable Transmission Owners and Transmission Operators the flexibility to work with the third-party reviewer throughout (*i.e.*, concurrent with) the evaluation performed according to Requirement R4 and the security plan(s) developed according to Requirement R5, which for some Responsible Entities may be more efficient and effective. In other words, a Transmission Owner or Transmission Operator could collaborate with their unaffiliated third-party reviewer to perform an evaluation of potential threats and vulnerabilities (Requirement R4) and develop a security plan (Requirement R5) to satisfy Requirements R4 through R6 simultaneously. The intent of Requirement R6 is to have an entity other than the owner or operator of the facility to be involved in the Requirement R4 evaluation and the development of the Requirement R5 security plans and have an opportunity to provide input on the evaluation and the security plan. Accordingly, Requirement R6 is designed to allow entities the discretion to have a two-step process, where the Transmission Owner performs the evaluation and develops the security plan itself and then has a third-party review that assessment, or a one-step process, where the entity collaborates with a third party to perform the evaluation and develop the security plan.

~~Timeline~~

(Deleted graphics)-014-1 – Physical Security Process Flow

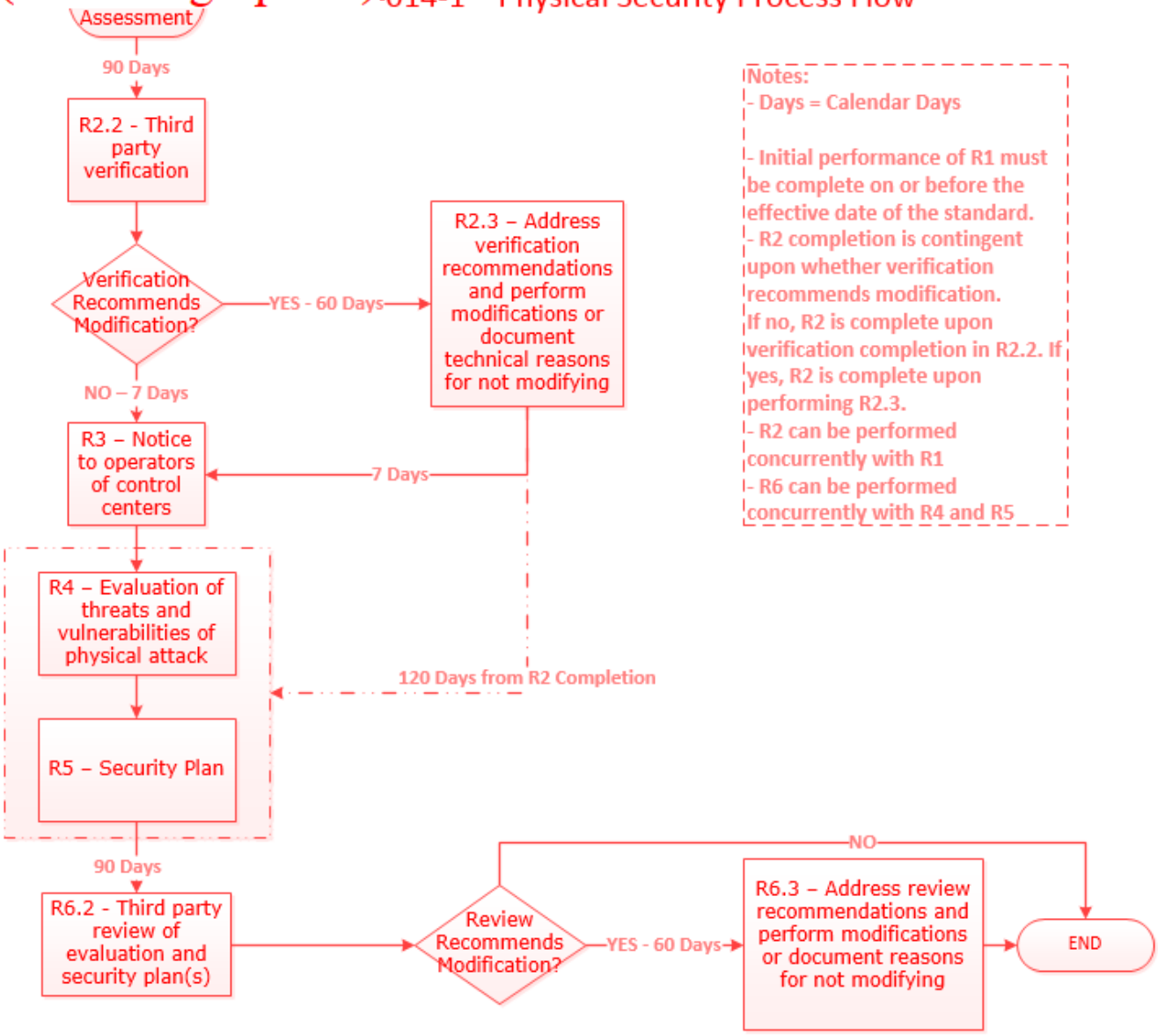

Rationale

During development of this standard, text boxes were embedded within the standard to explain the rationale for various parts of the standard. Upon BOT approval, the text from the rationale text boxes was moved to this section.

Rationale for Requirement R1:
This requirement meets the FERC directive from paragraph 6 of its March 7, 2014 order on physical security to perform a risk assessment to identify which facilities if rendered inoperable or damaged could impact an Interconnection through instability, uncontrolled separation, or cascading failures. The requirement is not intended to bring within the scope of the standard a Transmission station or Transmission substation unless the applicable Transmission Owner determines through technical studies and analyses based on objective analysis, technical expertise, operating experience and experienced judgment that the loss of such facility would have a critical impact on the operation of the Interconnection in the event the asset is rendered inoperable or damaged. In the November 20, 2014 Order, FERC reiterated that "only an instability that has a "critical impact on the operation of the interconnection" warrants finding that the facility causing the instability is critical under Requirement R1." The Transmission Owner may determine the criteria for critical impact by considering, among other criteria, any of the following:

- Criteria or methodology used by Transmission Planners or Planning Coordinators in TPL-001-4, Requirement R6
- NERC EOP-004-2 reporting criteria
- Area or magnitude of potential impact

Requirement R1 also meets the FERC directive for periodic reevaluation of the risk assessment by requiring the risk assessment to be performed every 30 months (or 60 months for an entity that has not identified in a previous risk assessment any Transmission stations or Transmission substations that if rendered inoperable or damaged could result in instability, uncontrolled separation, or Cascading within an Interconnection).

After identifying each Transmission station and Transmission substation that meets the criteria in Requirement R1, it is important to additionally identify the primary control center that operationally controls that Transmission station or Transmission substation (*i.e.*, the control center whose electronic actions can cause direct physical actions at the identified Transmission station and Transmission substation, such as opening a breaker, compared to a control center that only has the ability to monitor the Transmission station and Transmission substation and, therefore, must coordinate direct physical action through another entity).

Rationale for Requirement R2:
This requirement meets the FERC directive from paragraph 11 in the order on physical security

requiring verification by an entity other than the owner or operator of the risk assessment performed under Requirement R1.

This requirement provides the flexibility for a Transmission Owner to select registered and non-registered entities with transmission planning or analysis experience to perform the verification of the Requirement R1 risk assessment. The term "unaffiliated" means that the selected verifying entity cannot be a corporate affiliate (*i.e.*, the verifying entity cannot be an entity that controls, is controlled by, or is under common control with, the Transmission owner). The verifying entity also cannot be a division of the Transmission Owner that operates as a functional unit. The term "unaffiliated" is not intended to prohibit a governmental entity from using another government entity to be a verifier under Requirement R2.

Requirement R2 also provides the Transmission Owner the flexibility to work with the verifying entity throughout the Requirement R1 risk assessment, which for some Transmission Owners may be more efficient and effective. In other words, a Transmission Owner could coordinate with their unaffiliated verifying entity to perform a Requirement R1 risk assessment to satisfy both Requirement R1 and Requirement R2 concurrently.

Planning Coordinator is a functional entity listed in Part 2.1. The Planning Coordinator and Planning Authority are the same entity as shown in the NERC Glossary of Terms Used in NERC Reliability Standards.

Rationale for Requirement R3:
Some Transmission Operators will have obligations under this standard for certain primary control centers. Those obligations, however, are contingent upon a Transmission Owner first identifying which Transmission stations and Transmission substations meet the criteria specified by Requirement R1, as verified according to Requirement R2. This requirement is intended to ensure that a Transmission Operator that has operational control of a primary control center identified in Requirement R1, Part 1.2 of a Transmission station or Transmission substation verified according to Requirement R2 receives notice of such identification so that the Transmission Operator may timely fulfill its resulting obligations under Requirements R4 through R6. Since the timing obligations in Requirements R4 through R6 are based upon completion of Requirement R2, the Transmission Owner must also include notice of the date of completion of Requirement R2. Similarly, the Transmission Owner must notify the Transmission Operator of any removals from identification that result from a subsequent risk assessment under Requirement R1 or the verification process under Requirement R2.

Rationale for Requirement R4:
This requirement meets the FERC directive from paragraph 8 in the order on physical security that the reliability standard must require tailored evaluation of potential threats and vulnerabilities to facilities identified in Requirement R1 and verified according to Requirement R2. Threats and vulnerabilities may vary from facility to facility based on factors such as the facility's location, size, function, existing protections, and attractiveness of the target. As such,

the requirement does not mandate a one-size-fits-all approach but requires entities to account for the unique characteristics of their facilities.

Requirement R4 does not explicitly state when the evaluation of threats and vulnerabilities must occur or be completed. However, Requirement R5 requires that the entity's security plan(s), which is dependent on the Requirement R4 evaluation, must be completed within 120 calendar days following completion of Requirement R2. Thus, an entity has the flexibility when to complete the Requirement R4 evaluation, provided that it is completed in time to comply with the requirement in Requirement R5 to develop a physical security plan 120 calendar days following completion of Requirement R2.

Rationale for Requirement R5:
This requirement meets the FERC directive from paragraph 9 in the order on physical security requiring the development and implementation of a security plan(s) designed to protect against attacks to the facilities identified in Requirement R1 based on the assessment performed under Requirement R4.

Rationale for Requirement R6:
This requirement meets the FERC directive from paragraph 11 in the order on physical security requiring review by an entity other than the owner or operator with appropriate expertise of the evaluation performed according to Requirement R4 and the security plan(s) developed according to Requirement R5.

As with the verification required by Requirement R2, Requirement R6 provides Transmission Owners and Transmission Operators the flexibility to work with the third party reviewer throughout the Requirement R4 evaluation and the development of the Requirement R5 security plan(s). This would allow entities to satisfy their obligations under Requirement R6 concurrent with the satisfaction of their obligations under Requirements R4 and R5.

3. Transmission Facilities at a single station or substation location that are identified by its Reliability Coordinator, Planning Coordinator, or Transmission Planner as critical to the derivation of Interconnection Reliability Operating Limits (IROLs) and their associated contingencies.

4. Transmission Facilities identified as essential to meeting Nuclear Plant Interface Requirements (NPIRs).

Attachment 1 – Applicability Criteria

Applicable Transmission station(s) or Transmission substation(s) are those that meet any of the following criteria:

1. Transmission Facilities operated at 500 kV or higher. For the purpose of this criterion, the collector bus for a generation plant is not considered a Transmission Facility, but is part of the generation interconnection Facility.

2. Transmission Facilities that are operating between 200 kV and 499 kV at a single station or substation, where the station or substation is connected at 200 kV or higher voltages to three or more other Transmission stations or substations and has an "aggregate weighted value" exceeding 3000 according to the table below. The "aggregate weighted value" for a single station or substation is determined by summing the "weight value per line" shown in the table below for each incoming and each outgoing BES Transmission Line that is connected to another Transmission station or substation. For the purpose of this criterion, the collector bus for a generation plant is not considered a Transmission Facility, but is part of the generation interconnection Facility.

Voltage Value of a Line	Weight Value per Line
less than 200 kV (not applicable)	(not applicable)
200 kV to 299 kV	700
300 kV to 499 kV	1300
500 kV and above	N/A

3. Transmission Facilities at a single station or substation location that are identified by its Reliability Coordinator, Planning Coordinator, or Transmission Planner as critical to the derivation of Interconnection Reliability Operating Limits (IROLs) and their associated contingencies.

4. Transmission Facilities identified as essential to meeting Nuclear Plant Interface Requirements (NPIRs).

NERC
NORTH AMERICAN ELECTRIC RELIABILITY CORPORATION

Implementation Plan

Project 2023-06 CIP-014 Risk Assessment Refinement
Reliability Standard CIP-014-4

Applicable Standard(s)

- CIP-014-4 Physical Security

Requested Retirement(s)

- CIP-014-3 Physical Security

Applicable Entities

- Transmission Owner (TO)
- Transmission Operator (TOP)

General Considerations

The Drafting Team has determined that 24 calendar months for the CIP-014-4 implementation plan would allow adequate time for Transmission Owners and Transmission Operators to determine applicability, develop criteria, write or revise methodologies, perform assessments, and procure unaffiliated third parties for risk assessment verification (which some Transmission Owners have performed concurrently with their risk assessment analyses).

Effective Date of CIP-014-4

Where approval by an Applicable Governmental Authority is required, Reliability Standard CIP-014-4 shall become effective on the first day of the first calendar quarter that is 24 calendar months after the effective date of the Applicable Governmental Authority's order approving the standard or as otherwise provided for by the Applicable Governmental Authority.

Where approval by an Applicable Governmental Authority is not required, Reliability Standard CIP-014-4 shall become effective on the first day of the first calendar quarter that is 24 calendar months after the date the standard is adopted by the NERC Board of Trustees or as otherwise provided for in that jurisdiction.

Initial Performance of Periodic Requirements

The initial risk assessment required by Reliability Standard CIP-014-4 Requirement R5, must be completed on or before the effective date of the standard. Subsequent risk assessments shall be performed no later than 36 calendar months following the effective date of Reliability Standard CIP-014-4.

Retirement Date

Reliability Standard CIP-014-3 shall be retired immediately prior to the effective date of Reliability Standard CIP-014 in the particular jurisdiction in which the revised standard is becoming effective.

NERC
NORTH AMERICAN ELECTRIC RELIABILITY CORPORATION

Implementation Plan

Project 2023-06 CIP-014 Risk Assessment Refinement
Reliability Standard CIP-014-4

Applicable Standard(s)

- CIP-014-4 Physical Security

Requested Retirement(s)

- CIP-014-3 Physical Security

Applicable Entities

- Transmission Owner (TO)
- Transmission Operator (TOP)

General Considerations

The Drafting Team has determined that 24 calendar months for the CIP-014-4 implementation plan would allow adequate time for Transmission Owners and Transmission Operators to determine applicability, develop criteria, write or revise methodologies, perform assessments, and procure unaffiliated third parties for risk assessment verification (which some Transmission Owners have performed concurrently with their risk assessment analyses).

Effective Date of CIP-014-4

~~The initial risk assessment required by CIP-014-4, Requirement R5, must be completed on or before the effective date of the standard.~~ Where approval by an Applicable Governmental Authority is required, Reliability Standard CIP-014-4 shall become effective on the first day of the first calendar quarter that is 24 calendar months after the effective date of the Applicable Governmental Authority's order approving the standard or as otherwise provided for by the Applicable Governmental Authority.

Where approval by an Applicable Governmental Authority is not required, Reliability Standard CIP-014-4 shall become effective on the first day of the first calendar quarter that is 24 calendar months after the date the standard is adopted by the NERC Board of Trustees or as otherwise provided for in that jurisdiction.

Initial Performance of Periodic Requirements

The initial risk assessment required by Reliability Standard CIP-014-4 Requirement R5, must be completed on or before the effective date of the standard. Subsequent risk assessments shall be

performed no later than 36 calendar months following the effective date of Reliability Standard CIP-014-4.

Retirement Date

Reliability Standard CIP-014-3 shall be retired immediately prior to the effective date of Reliability Standard CIP-014 in the particular jurisdiction in which the revised standard is becoming effective.

NERC
NORTH AMERICAN ELECTRIC RELIABILITY CORPORATION

Violation Risk Factor and Violation Severity Level Justifications

Project 2023-06 CIP-014 Risk Assessment Refinement (CIP-014-4)

This document provides the drafting team's (DT's) justification for assignment of violation risk factors (VRFs) and violation severity levels (VSLs) for each requirement in CIP-014-4 Physical Security. Each requirement is assigned a VRF and a VSL. These elements support the determination of an initial value range for the Base Penalty Amount regarding violations of requirements in FERC-approved Reliability Standards, as defined in the Electric Reliability Organizations (ERO) Sanction Guidelines. The SDT applied the following NERC criteria and FERC Guidelines when developing the VRFs and VSLs for the requirements.

NERC Criteria for Violation Risk Factors

High Risk Requirement

A requirement that, if violated, could directly cause or contribute to Bulk Electric System instability, separation, or a cascading sequence of failures, or could place the Bulk Electric System at an unacceptable risk of instability, separation, or cascading failures; or, a requirement in a planning time frame that, if violated, could, under emergency, abnormal, or restorative conditions anticipated by the preparations, directly cause or contribute to Bulk Electric System instability, separation, or a cascading sequence of failures, or could place the Bulk Electric System at an unacceptable risk of instability, separation, or cascading failures, or could hinder restoration to a normal condition.

Medium Risk Requirement

A requirement that, if violated, could directly affect the electrical state or the capability of the Bulk Electric System, or the ability to effectively monitor and control the Bulk Electric System. However, violation of a medium risk requirement is unlikely to lead to Bulk Electric System instability, separation, or cascading failures; or, a requirement in a planning time frame that, if violated, could, under emergency, abnormal, or restorative conditions anticipated by the preparations, directly and adversely affect the electrical state or capability of the Bulk Electric System, or the ability to effectively monitor, control, or restore the Bulk Electric System. However, violation of a medium risk requirement is unlikely, under emergency, abnormal, or restoration conditions anticipated by the preparations, to lead to Bulk Electric System instability, separation, or cascading failures, nor to hinder restoration to a normal condition.

Lower Risk Requirement
A requirement that is administrative in nature and a requirement that, if violated, would not be expected to adversely affect the electrical state or capability of the Bulk Electric System, or the ability to effectively monitor and control the Bulk Electric System; or, a requirement that is administrative in nature and a requirement in a planning time frame that, if violated, would not, under the emergency, abnormal, or restorative conditions anticipated by the preparations, be expected to adversely affect the electrical state or capability of the Bulk Electric System, or the ability to effectively monitor, control, or restore the Bulk Electric System.

FERC Guidelines for Violation Risk Factors

Guideline (1) – Consistency with the Conclusions of the Final Blackout Report

FERC seeks to ensure that VRFs assigned to Requirements of Reliability Standards in these identified areas appropriately reflect their historical critical impact on the reliability of the Bulk-Power System. In the VSL Order, FERC listed critical areas (from the Final Blackout Report) where violations could severely affect the reliability of the Bulk-Power System:

- Emergency operations
- Vegetation management
- Operator personnel training
- Protection systems and their coordination
- Operating tools and backup facilities
- Reactive power and voltage control
- System modeling and data exchange
- Communication protocol and facilities
- Requirements to determine equipment ratings
- Synchronized data recorders
- Clearer criteria for operationally critical facilities
- Appropriate use of transmission loading relief.

Guideline (2) – Consistency within a Reliability Standard
FERC expects a rational connection between the sub-Requirement VRF assignments and the main Requirement VRF assignment.

Guideline (3) – Consistency among Reliability Standards
FERC expects the assignment of VRFs corresponding to Requirements that address similar reliability goals in different Reliability Standards would be treated comparably.

Guideline (4) – Consistency with NERC's Definition of the Violation Risk Factor Level
Guideline (4) was developed to evaluate whether the assignment of a particular VRF level conforms to NERC's definition of that risk level.

Guideline (5) – Treatment of Requirements that Co-mingle More Than One Obligation
Where a single Requirement co-mingles a higher risk reliability objective and a lesser risk reliability objective, the VRF assignment for such Requirements must not be watered down to reflect the lower risk level associated with the less important objective of the Reliability Standard.

NERC Criteria for Violation Severity Levels

VSLs define the degree to which compliance with a requirement was not achieved. Each requirement must have at least one VSL. While it is preferable to have four VSLs for each requirement, some requirements do not have multiple "degrees" of noncompliant performance and may have only one, two, or three VSLs.

VSLs should be based on NERC's overarching criteria shown in the table below:

Lower VSL	Moderate VSL	High VSL	Severe VSL
The performance or product measured almost meets the full intent of the requirement.	The performance or product measured meets the majority of the intent of the requirement.	The performance or product measured does not meet the majority of the intent of the requirement, but does meet some of the intent.	The performance or product measured does not substantively meet the intent of the requirement.

FERC Order of Violation Severity Levels

The FERC VSL guidelines are presented below, followed by an analysis of whether the VSLs proposed for each requirement in the standard meet the FERC Guidelines for assessing VSLs:

Guideline (1) – Violation Severity Level Assignments Should Not Have the Unintended Consequence of Lowering the Current Level of Compliance

Compare the VSLs to any prior levels of non-compliance and avoid significant changes that may encourage a lower level of compliance than was required when levels of non-compliance were used.

Guideline (2) – Violation Severity Level Assignments Should Ensure Uniformity and Consistency in the Determination of Penalties

A violation of a "binary" type requirement must be a "Severe" VSL.
Do not use ambiguous terms such as "minor" and "significant" to describe noncompliant performance.

Guideline (3) – Violation Severity Level Assignment Should Be Consistent with the Corresponding Requirement

VSLs should not expand on what is required in the requirement.

Guideline (4) – Violation Severity Level Assignment Should Be Based on a Single Violation, Not on a Cumulative Number of Violations

Unless otherwise stated in the requirement, each instance of non-compliance with a requirement is a separate violation. Section 4 of the Sanction Guidelines states that assessing penalties on a per violation per day basis is the "default" for penalty calculations.

VRF Justifications for CIP-014-4, Requirement R1	
Proposed VRF	**High**
NERC VRF Discussion	A VRF of higher is appropriate because the requirement, if violated, could directly cause or contribute to Bulk Electric System instability, separation, or a cascading sequence of failures, or could place the Bulk Electric System at an unacceptable risk of instability, separation, or cascading failures. The VRF is revised and unchanged from the last FERC approved version.
FERC VRF G1 Discussion Guideline 1- Consistency with Blackout Report	This VRF is consistent with the identified areas from the FERC list of critical areas in the Final Blackout Report.
FERC VRF G2 Discussion Guideline 2- Consistency within a Reliability Standard	The VRF for Requirement R1 is consistent with those connections between the sub-Requirement VRF assignments and the main Requirement VRF assignment.
FERC VRF G3 Discussion Guideline 3- Consistency among Reliability Standards	This VRF is consistent with other VRFs that address similar reliability goals in different Reliability Standards.
FERC VRF G4 Discussion Guideline 4- Consistency with NERC Definitions of VRFs	This VRF is consistent with the definition of a High VRF requirement per the criteria filed with FERC as part of the ERO's Sanctions Guidelines.
FERC VRF G5 Discussion Guideline 5- Treatment of Requirements that Co-mingle More	This requirement does not mingle a higher risk reliability objective and a lesser risk reliability objective. Therefore, the VRF reflects the risk of the whole requirement.

VRF Justifications for CIP-014-4, Requirement R1	
Proposed VRF	**High**
than One Obligation	

VSLs for CIP-014-4, Requirement R1			
Lower	**Moderate**	**High**	**Severe**
The Transmission Owner identified each applicable Transmission station(s) or Transmission substation(s) per Attachment 1, but did so after 36 calendar months, but less than or equal to 38 calendar months. OR The Transmission Owner identified each applicable Transmission station(s) or Transmission substation(s), but failed to identify less than or equal to 10% of the applicable Transmission station(s) or Transmission substation(s) per Attachment 1.	The Transmission Owner identified each applicable Transmission station(s) or Transmission substation(s) per Attachment 1, but did so after 38 calendar months, but less than or equal to 40 calendar months. OR The Transmission Owner identified each applicable Transmission station(s) or Transmission substation(s), but failed to identify more than 10% and less than or equal to 20% of the applicable Transmission station(s) or Transmission substation(s) per Attachment 1.	The Transmission Owner identified each applicable Transmission station(s) or Transmission substation(s) per Attachment 1, but did so after 40 calendar months, but less than or equal to 42 calendar months. OR The Transmission Owner identified each applicable Transmission station(s) or Transmission substation(s), but failed to identify more than 20% and less than or equal to 30% of the applicable Transmission station(s) or Transmission substation(s) per Attachment 1.	The Transmission Owner failed to identify each applicable Transmission station(s) or Transmission substation(s) per Attachment 1. OR The Transmission Owner identified each applicable Transmission station(s) or Transmission substation(s) per Attachment 1, but did so after more than 42 calendar months. OR The Transmission Owner identified each applicable Transmission station(s) or Transmission substation(s), but failed to identify more than 30% of the applicable Transmission station(s) or Transmission substation(s) per Attachment 1.

VSL Justifications for CIP-014-4, Requirement R1	
FERC VSL G1 Violation Severity Level Assignments Should Not Have the Unintended Consequence of Lowering the Current Level of Compliance	The proposed VSLs do not have the unintended consequence of lowering the level of compliance.
FERC VSL G2 Violation Severity Level Assignments Should Ensure Uniformity and Consistency in the Determination of Penalties Guideline 2a: The Single Violation Severity Level Assignment Category for "Binary" Requirements Is Not Consistent Guideline 2b: Violation Severity Level Assignments that Contain Ambiguous Language	The proposed VSLs are not binary and do not use any ambiguous terminology, thereby supporting uniformity and consistency in the determination of similar penalties for similar violations.
FERC VSL G3 Violation Severity Level Assignment Should Be Consistent with the Corresponding Requirement	The proposed VSLs use the same terminology as used in the associated requirement and are, therefore, consistent with the requirement.
FERC VSL G4 Violation Severity Level Assignment Should Be Based on A Single Violation, Not on A Cumulative Number of Violations	Each VSL is based on a single violation and not cumulative violations.

VRF Justifications for CIP-014-4, Requirement R2	
Proposed VRF	**Medium**
NERC VRF Discussion	A VRF of Medium is appropriate because, if violated, it could directly affect the electrical state or the capability of the Bulk Electric System, or the ability to effectively monitor and control the Bulk Electric System; however, a violation is unlikely to lead to Bulk Electric System instability, separation, or cascading failures.
FERC VRF G1 Discussion Guideline 1- Consistency with Blackout Report	This VRF is consistent with the identified areas from the FERC list of critical areas in the Final Blackout Report.
FERC VRF G2 Discussion Guideline 2- Consistency within a Reliability Standard	The VRF for Requirement R2 is consistent with those connections between the sub-Requirement VRF assignments and the main Requirement VRF assignment.
FERC VRF G3 Discussion Guideline 3- Consistency among Reliability Standards	This VRF is consistent with other VRFs that address similar reliability goals in different Reliability Standards.
FERC VRF G4 Discussion Guideline 4- Consistency with NERC Definitions of VRFs	This VRF is consistent with the definition of a Medium VRF requirement per the criteria filed with FERC as part of the ERO's Sanctions Guidelines.
FERC VRF G5 Discussion Guideline 5- Treatment of Requirements that Co-mingle More than One Obligation	This requirement does not mingle a higher risk reliability objective and a lesser risk reliability objective. Therefore, the VRF reflects the risk of the whole requirement.

VSLs for CIP-014-4, Requirement R2			
Lower	**Moderate**	**High**	**Severe**
N/A	N/A	N/A	The Transmission Owner did not identify proximate Transmission station(s) and Transmission substation(s), irrespective of ownership, within 1500 feet or 457 meters (the shortest distance, measured substation fence line to substation fence line) of an applicable Transmission station or Transmission substation identified in Requirement R1.

VSL Justifications for CIP-014-4, Requirement R2	
FERC VSL G1 Violation Severity Level Assignments Should Not Have the Unintended Consequence of Lowering the Current Level of Compliance	This is a new Requirement and does not have the unintended consequence of lowering the current level of compliance.
FERC VSL G2 Violation Severity Level Assignments Should Ensure Uniformity and Consistency in the Determination of Penalties Guideline 2a: The Single Violation Severity Level Assignment Category for "Binary" Requirements Is Not	The proposed VSLs are binary and do not use any ambiguous terminology, thereby supporting uniformity and consistency in the determination of similar penalties for similar violations. The new Requirement R2 is a binary requirement and thus only assigned a Severe VSL because the Transmission Owners either have or have not identified proximate Transmission station(s) and Transmission substation(s), irrespective of ownership, within 1500 feet or 457 meters (the shortest distance, measured substation fence line to substation fence line) of an applicable Transmission station or Transmission substation identified in Requirement R1.

VSL Justifications for CIP-014-4, Requirement R2	
Consistent Guideline 2b: Violation Severity Level Assignments that Contain Ambiguous Language	
FERC VSL G3 Violation Severity Level Assignment Should Be Consistent with the Corresponding Requirement	The proposed VSLs use the same terminology as used in the associated requirement and are, therefore, consistent with the requirement.
FERC VSL G4 Violation Severity Level Assignment Should Be Based on A Single Violation, Not on A Cumulative Number of Violations	Each VSL is based on a single violation and not cumulative violations.

VRF Justifications for CIP-014-4, Requirement R3	
Proposed VRF	**High**
NERC VRF Discussion	A VRF of higher is appropriate because the requirement, if violated, could directly cause or contribute to Bulk Electric System instability, separation, or a cascading sequence of failures, or could place the Bulk Electric System at an unacceptable risk of instability, separation, or cascading failures.
FERC VRF G1 Discussion Guideline 1- Consistency with Blackout Report	This VRF is consistent with the identified areas from the FERC list of critical areas in the Final Blackout Report.
FERC VRF G2 Discussion	The VRF for Requirement R3 is consistent with those connections between the sub-Requirement VRF

VRF Justifications for CIP-014-4, Requirement R3	
Proposed VRF	**High**
Guideline 2- Consistency within a Reliability Standard	assignments and the main Requirement VRF assignment.
FERC VRF G3 Discussion Guideline 3- Consistency among Reliability Standards	This VRF is consistent with other VRFs that address similar reliability goals in different Reliability Standards.
FERC VRF G4 Discussion Guideline 4- Consistency with NERC Definitions of VRFs	This VRF is consistent with the definition of a High VRF requirement per the criteria filed with FERC as part of the ERO's Sanctions Guidelines.
FERC VRF G5 Discussion Guideline 5- Treatment of Requirements that Co-mingle More than One Obligation	This requirement does mingle a higher risk reliability objective and risk reliability objective. Therefore, the VRF reflects the risk of the whole requirement.

VSLs for CIP-014-4, Requirement R3			
Lower	**Moderate**	**High**	**Severe**
The Transmission Owner has a risk assessment methodology that failed to include one of the requirements listed in Parts 3.1 through 3.4.	The Transmission Owner has a risk assessment methodology that failed to include two of the requirements listed in Parts 3.1 through 3.4.	The Transmission Owner has a risk assessment methodology that failed to include three of the requirements listed in Parts 3.1 through 3.4.	The Transmission Owner has a risk assessment methodology that failed to include four of the requirements listed in Parts 3.1 through 3.4. OR The Transmission Owner does not have a risk assessment methodology.

VSL Justifications for CIP-014-4, Requirement R3	
FERC VSL G1 Violation Severity Level Assignments Should Not Have the Unintended Consequence of Lowering the Current Level of Compliance	The proposed VSLs do not have the unintended consequence of lowering the level of compliance.
FERC VSL G2 Violation Severity Level Assignments Should Ensure Uniformity and Consistency in the Determination of Penalties Guideline 2a: The Single Violation Severity Level Assignment Category for "Binary" Requirements Is Not Consistent Guideline 2b: Violation Severity Level Assignments that Contain Ambiguous Language	The proposed VSLs are not binary and do not use any ambiguous terminology, thereby supporting uniformity and consistency in the determination of similar penalties for similar violations.
FERC VSL G3 Violation Severity Level Assignment Should Be Consistent with the Corresponding Requirement	The proposed VSLs use the same terminology as used in the associated requirement and are, therefore, consistent with the requirement.
FERC VSL G4 Violation Severity Level Assignment Should Be Based on A Single Violation, Not on A Cumulative Number of Violations	Each VSL is based on a single violation and not cumulative violations.

VRF Justifications for CIP-014-4, Requirement R4	
Proposed VRF	**Medium**
NERC VRF Discussion	A VRF of Medium is appropriate because, if violated, it could directly affect the electrical state or the capability of the Bulk Electric System, or the ability to effectively monitor and control the Bulk Electric System; however, a violation is unlikely to lead to Bulk Electric System instability, separation, or cascading failures.
FERC VRF G1 Discussion Guideline 1- Consistency with Blackout Report	This VRF is consistent with the identified areas from the FERC list of critical areas in the Final Blackout Report.
FERC VRF G2 Discussion Guideline 2- Consistency within a Reliability Standard	The VRF for Requirement R4 is consistent with those connections between the sub-Requirement VRF assignments and the main Requirement VRF assignment.
FERC VRF G3 Discussion Guideline 3- Consistency among Reliability Standards	This VRF is consistent with other VRFs that address similar reliability goals in different Reliability Standards.
FERC VRF G4 Discussion Guideline 4- Consistency with NERC Definitions of VRFs	This VRF is consistent with the definition of a Medium VRF requirement per the criteria filed with FERC as part of the ERO's Sanctions Guidelines.
FERC VRF G5 Discussion Guideline 5- Treatment of Requirements that Co-mingle More than One Obligation	This requirement does not mingle a higher risk reliability objective and a lesser risk reliability objective. Therefore, the VRF reflects the risk of the whole requirement.

VSLs for CIP-014-4, Requirement R4			
Lower	**Moderate**	**High**	**Severe**
The Transmission Owner with applicable Transmission station(s) and Transmission substation(s) identified in Requirement R1 containing Bulk Electric System (BES) Elements owned by multiple Transmission Owners failed to coordinate with each appropriate Transmission Owner(s) to determine and document their individual and joint responsibilities for documenting a risk assessment methodology under Requirement R3 and for performing any required risk assessments per Requirement R5 for less than or equal to 25% of jointly owned applicable Transmission station(s) and Transmission substation(s).	The Transmission Owner with applicable Transmission station(s) and Transmission substation(s) identified in Requirement R1 containing Bulk Electric System (BES) Elements owned by multiple Transmission Owners failed to coordinate with each appropriate Transmission Owner(s) to determine and document their individual and joint responsibilities for documenting a risk assessment methodology under Requirement R3 and for performing any required risk assessments per Requirement R5 for more than 25% and less than or equal to 50% of jointly owned applicable Transmission station(s) and Transmission substation(s).	The Transmission Owner with applicable Transmission station(s) and Transmission substation(s) identified in Requirement R1 containing Bulk Electric System (BES) Elements owned by multiple Transmission Owners failed to coordinate with each appropriate Transmission Owner(s) to determine and document their individual and joint responsibilities for documenting a risk assessment methodology under Requirement R3 and for performing any required risk assessments per Requirement R5 for more than 50% and less than or equal to 75% of jointly owned applicable Transmission station(s) and Transmission substation(s).	The Transmission Owner with applicable Transmission station(s) and Transmission substation(s) identified in Requirement R1 containing Bulk Electric System (BES) Elements owned by multiple Transmission Owners failed to l coordinate with each appropriate Transmission Owner(s) to determine and document their individual and joint responsibilities for documenting a risk assessment methodology under Requirement R3 and for performing any required risk assessments per Requirement R5 for more than 75% and less than or equal to 100% any evidence of jointly owned applicable Transmission station(s) and Transmission substation(s).

VSL Justifications for CIP-014-4, Requirement R4	
FERC VSL G1 Violation Severity Level Assignments Should Not Have the Unintended Consequence of Lowering the Current Level of Compliance	The proposed VSLs do not have the unintended consequence of lowering the level of compliance.

VSL Justifications for CIP-014-4, Requirement R4	
FERC VSL G2 Violation Severity Level Assignments Should Ensure Uniformity and Consistency in the Determination of Penalties Guideline 2a: The Single Violation Severity Level Assignment Category for "Binary" Requirements Is Not Consistent Guideline 2b: Violation Severity Level Assignments that Contain Ambiguous Language	The proposed VSLs are not binary and do not use any ambiguous terminology, thereby supporting uniformity and consistency in the determination of similar penalties for similar violations.
FERC VSL G3 Violation Severity Level Assignment Should Be Consistent with the Corresponding Requirement	The proposed VSLs use the same terminology as used in the associated requirement and are, therefore, consistent with the requirement.
FERC VSL G4 Violation Severity Level Assignment Should Be Based on A Single Violation, Not on A Cumulative Number of Violations	Each VSL is based on a single violation and not cumulative violations.

VRF Justifications for CIP-014-4, Requirement R5	
Proposed VRF	**High**
NERC VRF Discussion	The VRF for this new Requirement R5 remains High because it is one of the two sub-Requirements of

VRF Justifications for CIP-014-4, Requirement R5	
Proposed VRF	**High**
	Requirement R1 from the previously FERC approved CIP-014-3 Reliability Standard.
FERC VRF G1 Discussion Guideline 1- Consistency with Blackout Report	This VRF is consistent with the identified areas from the FERC list of critical areas in the Final Blackout Report.
FERC VRF G2 Discussion Guideline 2- Consistency within a Reliability Standard	The VRF for Requirement R5 is consistent with those connections between the sub-Requirement VRF assignments and the main Requirement VRF assignment.
FERC VRF G3 Discussion Guideline 3- Consistency among Reliability Standards	This VRF is consistent with other VRFs that address similar reliability goals in different Reliability Standards.
FERC VRF G4 Discussion Guideline 4- Consistency with NERC Definitions of VRFs	This VRF is consistent with the definition of a High VRF requirement per the criteria filed with FERC as part of the ERO's Sanctions Guidelines.
FERC VRF G5 Discussion Guideline 5- Treatment of Requirements that Co-mingle More than One Obligation	This requirement does mingle a higher risk reliability objective and risk reliability objective. Therefore, the VRF reflects the risk of the whole requirement.

VSLs for CIP-014-4, Requirement R5			
Lower	**Moderate**	**High**	**Severe**
The Transmission Owner performed a risk assessment, but	The Transmission Owner performed a risk assessment, but	The Transmission Owner performed a risk assessment, but	The Transmission Owner performed a risk assessment, but

did so after 36 calendar months, but less than or equal to 38 calendar months. OR The Transmission Owner performed a risk assessment inconsistent with one of the methodology requirements listed in Requirement R3, Parts 3.1 through 3.4.	did so after 38 calendar months, but less than or equal to 40 calendar months. OR The Transmission Owner performed a risk assessment inconsistent with two of the methodology requirements listed in Requirement R3, Parts 3.1 through 3.4.	did so after 40 calendar months, but less than or equal to 42 calendar months. OR The Transmission Owner performed a risk assessment inconsistent with three of the methodology requirements listed in Requirement R3, Parts 3.1 through 3.4. OR The Transmission Owner performed a risk assessment but failed to include the primary control center identified in Part 5.2.	did so after more than 42 calendar months. OR The Transmission Owner performed a risk assessment inconsistent with four of the methodology requirements listed in Requirement R3, Parts 3.1 through 3.4.

VSL Justifications for CIP-014-4, Requirement R5	
FERC VSL G1 Violation Severity Level Assignments Should Not Have the Unintended Consequence of Lowering the Current Level of Compliance	The proposed VSLs do not have the unintended consequence of lowering the level of compliance.
FERC VSL G2 Violation Severity Level Assignments Should Ensure Uniformity and Consistency in the Determination of Penalties Guideline 2a: The Single Violation Severity Level Assignment Category	The proposed VSLs are not binary and do not use any ambiguous terminology, thereby supporting uniformity and consistency in the determination of similar penalties for similar violations.

VSL Justifications for CIP-014-4, Requirement R5	
for "Binary" Requirements Is Not Consistent Guideline 2b: Violation Severity Level Assignments that Contain Ambiguous Language	
FERC VSL G3 Violation Severity Level Assignment Should Be Consistent with the Corresponding Requirement	The proposed VSLs use the same terminology as used in the associated requirement and are, therefore, consistent with the requirement.
FERC VSL G4 Violation Severity Level Assignment Should Be Based on A Single Violation, Not on A Cumulative Number of Violations	Each VSL is based on a single violation and not cumulative violations.

VRF Justification for CIP-014-4, Requirement R6

This Requirement is the same as Requirement R2 in CIP-014-3. The VRF did not change from the previously FERC approved CIP-014-3 Reliability Standard.

VSL Justification for CIP-014-4, Requirement R6

The Requirement is the same as Requirement R2 in the previously FERC approved CIP-014-3 Reliability Standard. The VSL did not have material changes except for the reference Requirement numbers because 5 (five) new Requirements were added.

VRF Justification for CIP-014-4, Requirement R7

This Requirement is the same as Requirement R3 in CIP-014-3. The VRF did not change from the previously FERC approved CIP-014-3 Reliability Standard.

VSL Justification for CIP-014-4, Requirement R7

The Requirement is the same as Requirement R3 in the previously FERC approved CIP-014-3 Reliability Standard. The VSL did not have material changes except for the reference Requirement numbers because 5 (five) new Requirements were added.

VRF Justification for CIP-014-4, Requirement R8

This Requirement is the same as Requirement R4 in CIP-014-3. The VRF did not change from the previously FERC approved CIP-014-3 Reliability Standard.

VSL Justification for CIP-014-4, Requirement R8

The Requirement is the same as Requirement R4 in CIP-014-3. The VSL did not have material changes from the previously FERC approved CIP-014-3 Reliability Standard except changed "Responsible Entity" to "responsible entity" and the reference Requirement numbers because 5 (five) new Requirements were added.

VRF Justification for CIP-014-4, Requirement R9

This Requirement is the same as Requirement R5 in CIP-014-3. The VRF did not change from the previously FERC approved CIP-014-3 Reliability Standard.

VSL Justification for CIP-014-4, Requirement R9

The Requirement is the same as Requirement R5 in CIP-014-3. The VSL did not have material change from the previously FERC approved CIP-014-3 Reliability Standard except changed "Responsible Entity" to "responsible entity" and the reference Requirement numbers because 5 (five) new Requirements were added.

VRF Justification for CIP-014-4, Requirement R10

This Requirement is the same as Requirement R6 in CIP-014-3. The VRF did not change from the previously FERC approved CIP-014-3 Reliability Standard.

VSL Justification for CIP-014-4, Requirement R10

VSLs for CIP-014-4, Requirement R10			
Lower	**Moderate**	**High**	**Severe**
The responsible entity had an unaffiliated third party review the evaluation performed under Requirement R8 and the security plan(s) developed under Requirement R9, but did so in more than 90 calendar days, but less than or equal to 100 calendar days.	The responsible entity had an unaffiliated third party review the evaluation performed under Requirement R8 and the security plan(s) developed under Requirement R9, but did so in more than 100 calendar days, but less than or equal to 110 calendar days.	The responsible entity had an unaffiliated third party review the evaluation performed under Requirement R8 and the security plan(s) developed under Requirement R9, but did so more than 110 calendar days, but less than or equal to 120 calendar days.	The responsible entity failed to have an unaffiliated third party review the evaluation performed under Requirement R8 and the security plan(s) developed under Requirement R9 in more than 120 calendar days.

OR The responsible entity had an unaffiliated third party review the evaluation performed under Requirement R8 and the security plan(s) developed under Requirement R9 and modified or documented the reason for not modifying the security plan(s) as specified in Part 10.3, but did so more than 70 calendar days and less than or equal to 80 calendar days following completion of the third party review.	OR The responsible entity had an unaffiliated third party review the evaluation performed under Requirement R8 and the security plan(s) developed under Requirement R9 and modified or documented the reason for not modifying the security plan(s) as specified in Part 10.3, but did so more than 80 calendar days following completion of the third party review. OR The responsible entity had an unaffiliated third party review the evaluation performed under Requirement R8 and the security plan(s) developed under Requirement R9, but did not document the reason for not modifying the security plan(s) as specified in Part 10.3.	OR The responsible entity failed to have an unaffiliated third party review the evaluation performed under Requirement R8 and the security plan(s) developed under Requirement R9. OR The responsible entity had an unaffiliated third party review the evaluation performed under Requirement R8 and the security plan(s) developed under Requirement R9, but failed to implement procedures for protecting information per Part 10.4.	

VSL Justifications for CIP-014-4, Requirement R10	
FERC VSL G1 Violation Severity Level Assignments Should Not Have the Unintended Consequence of Lowering the Current Level of Compliance	This is an existing Requirement. The drafting team revised the VSL language for consistency with the proposed revisions to the standard. All of the violation severity levels stayed the same from the previously FERC-approved version

FERC VSL G2 Violation Severity Level Assignments Should Ensure Uniformity and Consistency in the Determination of Penalties Guideline 2a: The Single Violation Severity Level Assignment Category for "Binary" Requirements Is Not Consistent Guideline 2b: Violation Severity Level Assignments that Contain Ambiguous Language	The proposed VSLs are not binary and do not use any ambiguous terminology, thereby supporting uniformity and consistency in the determination of similar penalties for similar violations.
FERC VSL G3 Violation Severity Level Assignment Should Be Consistent with the Corresponding Requirement	The proposed VSLs use the same terminology as used in the associated requirement and are, therefore, consistent with the requirement.
FERC VSL G4 Violation Severity Level Assignment Should Be Based on A Single Violation, Not on A Cumulative Number of Violations	Each VSL is based on a single violation and not cumulative violations.

NERC
NORTH AMERICAN ELECTRIC RELIABILITY CORPORATION

Technical Rationale

Project 2023-06 CIP-014 Risk Assessment Refinement
Reliability Standard CIP-014-4 | June 2025

CIP-014-4 – Physical Security

In performing the risk assessment, the Transmission Owner should first identify their population of Transmission stations and Transmission substations that meet the criteria contained in Attachment 1. The Standard requires the Transmission Owner to perform a risk assessment, consisting of transmission analyses to determine which of those Transmission stations and Transmission Substations, if rendered inoperable or damaged, could result in instability, uncontrolled separation, or Cascading within an Interconnection.

The purpose of Reliability Standard CIP-014 is to protect Transmission stations and Transmission substations, and their associated primary control centers, that if rendered inoperable or damaged, as a result of a physical attack, could result in instability, uncontrolled separation, or Cascading within an Interconnection. To properly identify candidates for such Transmission station(s) and Transmission substation(s), the Transmission Owner shall evaluate the criteria listed in Attachment 1.

Rationale for Requirement R1
In the previous version of CIP-014, the 30-month time frame and the 24-month planned-to-be-in-service date could, if not carefully applied, lead to gaps between models and study horizons. Per the Standard Authorization Request (SAR), CIP-014-4 has consolidated these multiple timelines into one.

Requirement R1 is revised to ensure that each Transmission Owner establishes a list of applicable Transmission station(s) or Transmission substation(s) in accordance with Attachment 1. Aligning the 36 calendar months look ahead in Requirement R1 with the 36 calendar month risk assessment cycle ensures that system topology of the cases used to assess applicability is consistent with the system topology in the risk assessment models.

Transmission Owners shall review and, if necessary, update the list of applicable Transmission station(s) or Transmission substation(s) per Attachment 1 at least once every 36 calendar months. The list of applicable Transmission station(s) or Transmission substation(s) shall include existing or planned to be in service within 36 calendar months Transmission station(s) and Transmission substation(s). The 36 calendar months cycle for updating the list of applicable Transmission station(s) or Transmission substation(s) per Attachment 1 aligns with the annual cycle for performing Planning Assessments per NERC Standard TPL-001. The 36 calendar months risk assessment study cycle aligns with the 36 calendar months planned-to-be-in-service date. "Planned to be in-service" should be taken to mean all Transmission station(s) and Transmission substation(s) as modeled in the base cases for the Near-Term Transmission Planning Horizon.

Rationale for Requirement R2
The distance chosen in requirement R2 is based on guidelines that considered a variety of plausible attack scenarios capable of rendering a substation inoperable.

The drafting team choose 1500 feet or 457 meters (the shortest distance, measured substation fence line to substation fence line) in Requirement R2 is based on the study from America's Cyber Defense Agency developed in partnership with the Federal Bureau of Investigation (FBI). The Department of Homeland Security (DHS)-Department of Justice (DOJ) Bomb Threat Stand-Off Card is a quick reference guide providing recommended evacuation and shelter-in-place distances for various types and sizes of Improvised Explosive Devices (IED).[1]

Accurate simulation of the event was deemed a priority of the Drafting Team (DT). The DT felt that ownership of proximate substations, as identified in Requirement R2, was irrelevant to Bulk Electric System (BES) impact.

Rationale for Requirement R3
Per Requirement R3, each Transmission Owner is required to have a risk assessment methodology, including the criteria by which analytical results will be examined to identify Transmission station(s) or Transmission substation(s) that if rendered inoperable or damaged as a result of a physical attack could result in instability, uncontrolled separation, or Cascading within an Interconnection. The Transmission Owner is not required to develop its own methodology and is free to use a methodology developed elsewhere, such as in coordination with neighboring Transmission Owners or Independent System Operators (ISOs).

Rationale for Requirement R3, Part 3.1
Transmission Owners should determine the amount of unacceptable load loss and generation loss when determining the impact of an event to the Transmission system. Criteria for measures such as load loss or generation loss should consider the impact to the Interconnection.

Large loss of generation or load due to the evaluated disturbance could result in severe System impacts. The documented risk assessment methodology shall include the amount of unacceptable load loss and generation loss, that could result in instability, uncontrolled separation, or Cascading within an Interconnection. Conditions and thresholds used for determining critical Transmission station(s) or Transmission substation(s), i.e., those that if rendered inoperable or damaged as a result of a physical attack could result in instability, uncontrolled separation, or Cascading within an Interconnection, should be part of the documented risk assessment methodology.

It is up to the Transmission Owner to identify post-event measures that can be used to assess the criticality of a Transmission substation or Transmission substation. Suggested measures are listed below.

[1] https://www.cisa.gov/resources-tools/resources/dhs-doj-bomb-threat-stand-card

A Transmission Owner can decide that one or more of the items are not applicable to their location within the interconnection and if any additional items should be included.

The following parameters can be used to evaluate the steady-state and/or dynamic analysis:

- Steady state voltages
- Transient voltage response
- Thermal loading of Facilities
- Relay loadability
- Rotor angle stability
- Frequency exceeding generator limits
- Frequency stability
- Acceptable damping of oscillations
- Cascading line tripping
- Steady-state voltage stability

Rationale for Requirement R3, Part 3.2
The performance of both steady state and dynamics simulations is required for all applicable Transmission station(s) and substation(s). Dynamic simulations are required by the Standard because exclusively performing steady-state simulations are insufficient for determining whether the loss of a Transmission station or Transmission substation could result in instability, uncontrolled separation, or Cascading within an Interconnection.

Rationale for Requirement R3, Part 3.3
A simulation of a Fault provides a reasonable assumption for possible events that could impact a single Transmission station or Transmission substation, and for events that could simultaneously impact multiple Transmission stations or Transmission substations.

Rationale for Requirement R3, Part 3.4
The requirement that simulations shall assume the loss of communications and system protection is consistent with the SAR. In accordance with the SAR, the term “inoperable” includes the total loss of communication and protection equipment at the substation, necessitating delayed clearance from far-end relaying to isolate the event’s impacts. Each simulation should also include the removal of all Elements that Protection Systems and other controls are expected to automatically disconnect for the event.

While there are commonly used generic clearing times for remote clearing that are consistent across the industry, actual clearing times can be shorter or longer depending on conditions and design considerations at an individual Transmission Owner. The difference of a few cycles can have a significant

impact on the transient behavior of generating units, therefore, it is required that the risk analysis use actual or more conservative clearing time.

Rationale for Requirement R4
Joint ownership of Transmission substations and Transmission stations was discussed in the Guidelines and Technical Basis of previous versions of the CIP-014-3 standard, but the needed prescription on this issue was missing from the standard language. Because the CIP-014-4 Risk Assessment Refinement SAR calls for clarification regarding Transmission substations and Transmission stations of differing ownership, this section was clarified in Requirement R4.

Rationale for Requirement R5
An objective of the CIP-014-3 Risk Assessment Refinement SAR was to align study periods, frequency of studies and the powerflow models used for the studies. A 36-month periodicity was chosen for the R5 risk assessment to reduce the periodicity options from previous versions of the standard. Additionally, a single study periodicity is more easily aligned with project in-service date considerations and model choices. As called for in Project Scope item 3 of the CIP-014-3 Risk Assessment Refinement SAR, the risk assessment must comply with the methodology developed in R3, so this language was explicitly added to R5.

Transmission Owners shall review and, if necessary, update the list of applicable Transmission station(s) or Transmission substation(s) per Attachment 1 at least once every 36 months. The list of applicable Transmission station(s) or Transmission substation(s) shall include existing or planned to be in service within 36 months Transmission station(s) and Transmission substation(s). The 36-month cycle for updating the list of applicable Transmission station(s) or Transmission substation(s) per Attachment 1 aligns with the annual cycle for performing Planning Assessments per NERC Standard TPL-001. The 36-month risk assessment study cycle aligns with the 36-month planned-to-be-in-service date.

In addition to the performance of the risk assessment using Transmission station(s) and Transmission substation(s) identified in Requirement R1, any proximate Transmission station(s) and Transmission substation(s) identified in Requirement R2 should also be included in the risk assessment. Furthermore, any Transmission station(s) and Transmission substation(s) assessed due to having been identified per Requirement R1 should also be run as part of a proximate Transmission station(s) and Transmission substation(s) group per Requirement R2 if such an identification is made.

Rationale for Requirement R5, Part 5.1
If a Transmission Owner performs a steady state analysis and identifies a Transmission station or substation that, if rendered inoperable or damaged, could result in instability, uncontrolled separation, or Cascading within an Interconnection, then dynamic analysis is not required for that Transmission station or substation. If a Transmission Owner performs a dynamic analysis and identifies a Transmission station or substation that, if rendered inoperable or damaged, could result in instability, uncontrolled separation, or Cascading within an Interconnection, then steady state analysis is not required for that Transmission station or substation.

Rationale for Requirement R5, Part 5.2

The intent of this Requirement is that Transmission Owners do not have to reassess already identified and protected Transmission stations or substations (Requirement R5.3 and Requirements R7 through R10 still apply to those Transmission stations or substations). A new risk assessment will need to be performed if the Transmission owner wishes to determine whether or not a Transmission station or substation can be removed from identification and protection as outlined in Requirement R7.1.

Rationale for Requirement R5, Part 5.3

Identification of Primary Control Centers: After completing the risk assessment under Requirement R5 and verified under Requirement R6, it is important to additionally identify the primary control center that operationally controls each Transmission station or Transmission substation, that if rendered inoperable or damaged could result in instability, uncontrolled separation, or Cascading within an Interconnection. A primary control center "operationally controls" a Transmission station or Transmission substation when the control center's electronic actions can cause direct physical actions at the identified Transmission station and Transmission substation, such as opening a breaker.

Rationale for Implementation Plan

The Drafting Team has determined that 24 calendar months for the CIP-014-4 implementation plan would allow adequate time for Transmission Owners and Transmission Operators to determine applicability, develop criteria, write or revise methodologies, perform assessments, and procure unaffiliated third parties for risk assessment verification (which some Transmission Owners have performed concurrently with their risk assessment analyses.

CIP-014-4 Flowchart

The flowchart is a concise outline that guides through the steps for completing the risk assessment at least once every 36 calendar months, based on the Applicability in Attachment 1 and Requirements R1-R5.

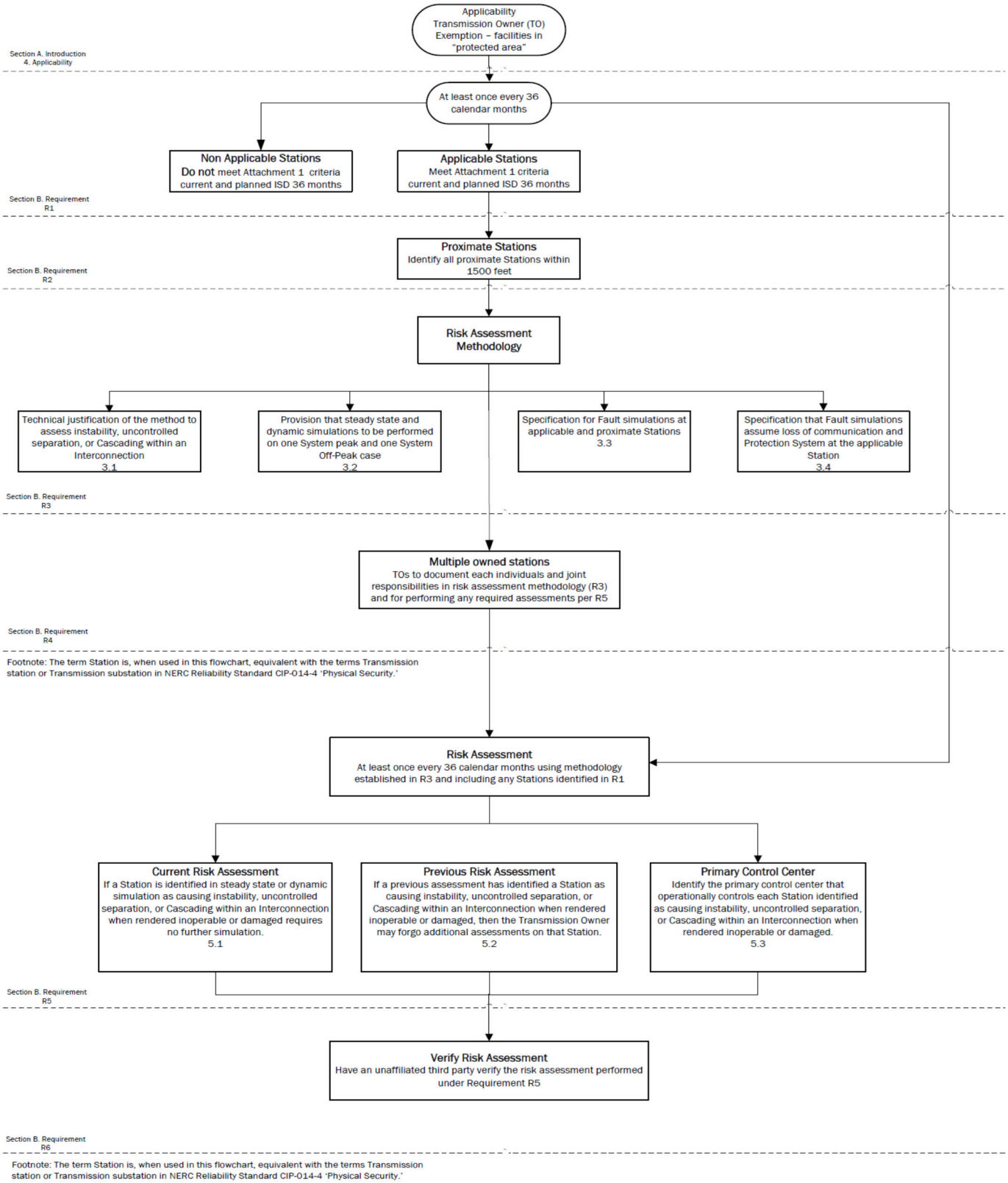
Applicability
Transmission Owner (TO) Exemption – facilities in "protected area"
Section A. Introduction
4. Applicability
At least once every 36 calendar months
Non Applicable Stations
Do not meet Attachment 1 criteria current and planned ISD 36 months
Applicable Stations
Meet Attachment 1 criteria current and planned ISD 36 months
Section B. Requirement
R1
Proximate Stations
Identify all proximate Stations within 1500 feet
Section B. Requirement
R2
Risk Assessment Methodology
Technical justification of the method to assess instability, uncontrolled separation, or Cascading within an Interconnection
3.1
Provision that steady state and dynamic simulations to be performed on one System peak and one System Off-Peak case
3.2
Specification for Fault simulations at applicable and proximate Stations
3.3
Specification that Fault simulations assume loss of communication and Protection System at the applicable Station
3.4
Section B. Requirement
R3
Multiple owned stations
TOs to document each individuals and joint responsibilities in risk assessment methodology (R3) and for performing any required assessments per R5
Section B. Requirement
R4
Footnote: The term Station is, when used in this flowchart, equivalent with the terms Transmission station or Transmission substation in NERC Reliability Standard CIP-014-4 'Physical Security.'
Risk Assessment
At least once every 36 calendar months using methodology established in R3 and including any Stations identified in R1
Current Risk Assessment
If a Station is identified in steady state or dynamic simulation as causing instability, uncontrolled separation, or Cascading within an Interconnection when rendered inoperable or damaged requires no further simulation.
5.1
Previous Risk Assessment
If a previous assessment has identified a Station as causing instability, uncontrolled separation, or Cascading within an Interconnection when rendered inoperable or damaged, then the Transmission Owner may forgo additional assessments on that Station.
5.2
Primary Control Center
Identify the primary control center that operationally controls each Station identified as causing instability, uncontrolled separation, or Cascading within an Interconnection when rendered inoperable or damaged.
5.3
Section B. Requirement
R5
Verify Risk Assessment
Have an unaffiliated third party verify the risk assessment performed under Requirement R5
Section B. Requirement
R6
Footnote: The term Station is, when used in this flowchart, equivalent with the terms Transmission station or Transmission substation in NERC Reliability Standard CIP-014-4 'Physical Security.'

Technical Rationale for Reliability Standard CIP-014-3

This section contains a "cut and paste" of the former Guidelines and Technical Basis (GTB) as-is of from CIP-014-3 standard to preserve any historical references. No modifications have been made.

Requirement R2 (This is Requirement R6 in CIP-014-4)
This requirement specifies verification of the risk assessment performed under Requirement R1 by an entity other than the owner or operator of the Requirement R1 risk assessment.

A verification of the risk assessment by an unaffiliated third party, as specified in Requirement R2, could consist of:

1. Certifying that the Requirement R1 risk assessment considers the Transmission stations and Transmission substations identified in Applicability Section 4.1.1.
2. Review of the model used to conduct the risk assessment to ensure it contains sufficient system topology to identify Transmission stations and Transmission substations that if rendered inoperable or damaged could cause instability, uncontrolled separation, or Cascading within an Interconnection.
3. Review of the Requirement R1 risk assessment methodology.

This requirement provides the flexibility for a Transmission Owner to select from unaffiliated registered and non-registered entities with transmission planning or analysis experience to perform the verification of the Requirement R1 risk assessment. The term unaffiliated means that the selected verifying entity cannot be a corporate affiliate (*i.e.,* the verifying or third party reviewer cannot be an entity that corporately controls, is controlled by or is under common control with, the Transmission Owner). The verifying entity also cannot be a division of the Transmission Owner that operates as a functional unit.

The prohibition on registered entities using a corporate affiliate to conduct the verification, however, does not prohibit a governmental entity (e.g., a city, a municipality, a U.S. federal power marketing agency, or any other political subdivision of U.S. or Canadian federal, state, or provincial governments) from selecting as the verifying entity another governmental entity within the same political subdivision. For instance, a U.S. federal power marketing agency may select as its verifier another U.S. federal agency to conduct its verification so long as the selected entity has transmission planning or analysis experience. Similarly, a Transmission Owner owned by a Canadian province can use a separate agency of that province to perform the verification. The verifying entity, however, must still be a third party and cannot be a division of the registered entity that operates as a functional unit.

Requirement R2 also provides that the "verification may occur concurrent with or after the risk assessment performed under Requirement R1." This provision is designed to provide the Transmission Owner the flexibility to work with the verifying entity throughout (*i.e.,* concurrent with) the risk assessment, which for some Transmission Owners may be more efficient and effective. In other words, a Transmission Owner could collaborate with their unaffiliated verifying entity to perform the risk assessment under Requirement R1 such that both Requirement R1 and Requirement R2 are satisfied

concurrently. The intent of Requirement R2 is to have an entity other than the owner or operator of the facility to be involved in the risk assessment process and have an opportunity to provide input. Accordingly, Requirement R2 is designed to allow entities the discretion to have a two-step process, where the Transmission Owner performs the risk assessment and subsequently has a third party review that assessment, or a one-step process, where the entity collaborates with a third party to perform the risk assessment.

Characteristics to consider in selecting a third party reviewer could include:

- Registered Entity with applicable planning and reliability functions.
- Experience in power system studies and planning.
- The entity's understanding of the MOD standards, TPL standards, and facility ratings as they pertain to planning studies.
- The entity's familiarity with the Interconnection within which the Transmission Owner is located.

With respect to the requirement that Transmission owners develop and implement procedures for protecting confidential and sensitive information, the Transmission Owner could have a method for identifying documents that require confidential treatment. One mechanism for protecting confidential or sensitive information is to prohibit removal of sensitive or confidential information from the Transmission Owner's site. Transmission Owners could include such a prohibition in a non-disclosure agreement with the verifying entity.

A Technical feasibility study is not required in the Requirement R2 documentation of the technical basis for not modifying the identification in accordance with the recommendation.

On the issue of the difference between a verifier in Requirement R2 and a reviewer in Requirement R6, the SDT indicates that the verifier will confirm that the risk assessment was completed in accordance with Requirement R1, including the number of Transmission stations and substations identified, while the reviewer in Requirement R6 is providing expertise on the manner in which the evaluation of threats was conducted in accordance with Requirement R4, and the physical security plan in accordance with Requirement R5. In the latter situation there is no verification of a technical analysis, rather an application of experience and expertise to provide guidance or recommendations, if needed.

Parts 2.4 and 6.4 require the entities to have procedures to protect the confidentiality of sensitive or confidential information. Those procedures may include the following elements:

1. Control and retention of information on site for third party verifiers/reviewers.
2. Only "need to know" employees, etc., get the information.
3. Marking documents as confidential
4. Securely storing and destroying information when no longer needed.

5. Not releasing information outside the entity without, for example, General Counsel sign-off.

Requirement R3 (This is now Requirement R7 in CIP-014-4)
Some Transmission Operators will have obligations under this standard for certain primary control centers. Those obligations, however, are contingent upon a Transmission Owner first completing the risk assessment specified by Requirement R1 and the verification specified by Requirement R2. Requirement R3 is intended to ensure that a Transmission Operator that has operational control of a primary control center identified in Requirement R1 receive notice so that the Transmission Operator may fulfill the rest of the obligations required in Requirements R4 through R6. Since the timing obligations in Requirements R4 through R6 are based upon completion of Requirement R2, the Transmission Owner must also include within the notice the date of completion of Requirement R2. Similarly, the Transmission Owner must notify the Transmission Operator of any removals from identification that result from a subsequent risk assessment under Requirement R1 or as a result of the verification process under Requirement R2.

Requirement R4 (This is now Requirement R8 in CIP-014-4)
This requirement requires owners and operators of facilities identified by the Requirement R1 risk assessment and that are verified under Requirement R2 to conduct an assessment of potential threats and vulnerabilities to those Transmission stations, Transmission substations, and primary control centers using a tailored evaluation process. Threats and vulnerabilities may vary from facility to facility based on any number of factors that include, but are not limited to, location, size, function, existing physical security protections, and attractiveness as a target.

In order to effectively conduct a threat and vulnerability assessment, the asset owner may be the best source to determine specific site vulnerabilities, but current and evolving threats may best be determined by others in the intelligence or law enforcement communities. A number of resources have been identified in the standard, but many others exist and asset owners are not limited to where they may turn for assistance. Additional resources may include state or local fusion centers, U.S. Department of Homeland Security, Federal Bureau of Investigations (FBI), Public Safety Canada, Royal Canadian Mounted Police, and InfraGard chapters coordinated by the FBI.

The Responsible Entity is required to take a number of factors into account in Parts 4.1 to 4.3 in order to make a risk-based evaluation under Requirement R4.

To assist in determining the current threat for a facility, the prior history of attacks on similarly protected facilities should be considered when assessing probability and likelihood of occurrence at the facility in question.

Resources that may be useful in conducting threat and vulnerability assessments include:

- NERC Security Guideline for the Electricity Sector: Physical Security.
- NERC Security Guideline: Physical Security Response.

- ASIS International General Risk Assessment Guidelines.
- ASIS International Facilities Physical Security Measure Guideline.
- ASIS International Security Management Standard: Physical Asset Protection.
- Whole Building Design Guide - Threat/Vulnerability Assessments.

Requirement R5 (This is now Requirement R9 in CIP-014-4)
This requirement specifies development and implementation of a security plan(s) designed to protect against attacks to the facilities identified in Requirement R1 based on the assessment performed under Requirement R4.

Requirement R5 specifies the following attributes for the physical security plan:

- *Resiliency or security measures designed collectively to deter, detect, delay, assess, communicate, and respond to potential physical threats and vulnerabilities identified during the evaluation conducted in Requirement R4.*

  Resiliency may include, among other things:

  a. System topology changes,

  b. Spare equipment,

  c. Construction of a new Transmission station or Transmission substation.

  While most security measures will work together to collectively harden the entire site, some may be allocated to protect specific critical components. For example, if protection from gunfire is considered necessary, the entity may only install ballistic protection for critical components, not the entire site.

- *Law enforcement contact and coordination information.*

  Examples of such information may be posting 9-1-1 for emergency calls and providing substation safety and familiarization training for local and federal law enforcement, fire department, and Emergency Medical Services.

- *A timeline for executing the physical security enhancements and modifications specified in the physical security plan.*

  Entities have the flexibility to prioritize the implementation of the various resiliency or security enhancements and modifications in their security plan according to risk, resources, or other factors. The requirement to include a timeline in the physical security plan for executing the actual physical security enhancements and modifications does not also require that the enhancements and modifications be completed within 120 days. The actual timeline may extend beyond the 120 days, depending on the amount of work to be completed.

- *Provisions to evaluate evolving physical threats, and their corresponding security measures, to the Transmission station(s), Transmission substation(s), or primary control center(s).*

A registered entity's physical security plan should include processes and responsibilities for obtaining and handling alerts, intelligence, and threat warnings from various sources. Some of these sources could include the ERO, ES-ISAC, and US and/or Canadian federal agencies. This information should be used to reevaluate or consider changes in the security plan and corresponding security measures of the security plan found in R5.

Incremental changes made to the physical security plan prior to the next required third party review do not require additional third party reviews.

Requirement R6 (This is now Requirement R10 in CIP-014-4)
This requirement specifies review by an entity other than the Transmission Owner or Transmission Operator with appropriate expertise for the evaluation performed according to Requirement R4 and the security plan(s) developed according to Requirement R5. As with Requirement R2, the term unaffiliated means that the selected third party reviewer cannot be a corporate affiliate (*i.e.,* the third party reviewer cannot be an entity that corporately controls, is controlled by or is under common control with, the Transmission Operator). A third party reviewer also cannot be a division of the Transmission Operator that operates as a functional unit.

As noted in the guidance for Requirement R2, the prohibition on registered entities using a corporate affiliate to conduct the review, however, does not prohibit a governmental entity from selecting as the third party reviewer another governmental entity within the same political subdivision. For instance, a city or municipality may use its local enforcement agency, so long as the local law enforcement agency satisfies the criteria in Requirement R6. The third party reviewer, however, must still be a third party and cannot be a division of the registered entity that operates as a functional unit.

The Responsible Entity can select from several possible entities to perform the review:

- *An entity or organization with electric industry physical security experience and whose review staff has at least one member who holds either a Certified Protection Professional (CPP) or Physical Security Professional (PSP) certification.*

  In selecting CPP and PSP for use in this standard, the SDT believed it was important that if a private entity such as a consulting or security firm was engaged to conduct the third party review, they must tangibly demonstrate competence to conduct the review. This includes electric industry physical security experience and either of the premier security industry certifications sponsored by ASIS International. The ASIS certification program was initiated in 1977, and those that hold the CPP certification are board certified in security management. Those that hold the PSP certification are board certified in physical security.

- *An entity or organization approved by the ERO.*
- *A governmental agency with physical security expertise.*
- *An entity or organization with demonstrated law enforcement, government, or military physical security expertise.*

As with the verification under Requirement R2, Requirement R6 provides that the "review may occur concurrently with or after completion of the evaluation performed under Requirement R4 and the security plan development under Requirement R5." This provision is designed to provide applicable Transmission Owners and Transmission Operators the flexibility to work with the third party reviewer throughout (*i.e.,* concurrent with) the evaluation performed according to Requirement R4 and the security plan(s) developed according to Requirement R5, which for some Responsible Entities may be more efficient and effective. In other words, a Transmission Owner or Transmission Operator could collaborate with their unaffiliated third party reviewer to perform an evaluation of potential threats and vulnerabilities (Requirement R4) and develop a security plan (Requirement R5) to satisfy Requirements R4 through R6 simultaneously. The intent of Requirement R6 is to have an entity other than the owner or operator of the facility to be involved in the Requirement R4 evaluation and the development of the Requirement R5 security plans and have an opportunity to provide input on the evaluation and the security plan. Accordingly, Requirement R6 is designed to allow entities the discretion to have a two-step process, where the Transmission Owner performs the evaluation and develops the security plan itself and then has a third party review that assessment, or a one-step process, where the entity collaborates with a third party to perform the evaluation and develop the security plan.

Rationale for Attachment 1

The DT moved the applicability language from CIP-014-3 to Attachment 1 to make the standard easier to read.

The purpose of Reliability Standard CIP-014 is to protect Transmission stations and Transmission substations, and their associated primary control centers that if rendered inoperable or damaged as a result of a physical attack could result in instability, uncontrolled separation, or Cascading within an Interconnection. To properly include those entities that own or operate such Facilities, the Reliability Standard CIP-014 first applies to Transmission Owners that own Transmission Facilities that meet the specific criteria in Applicability Section 4.1.1.1 through 4.1.1.4. The Facilities described in Applicability Section 4.1.1.1 through 4.1.1.4 mirror those Transmission Facilities that meet the bright line criteria for "Medium Impact" Transmission Facilities under Attachment 1 of Reliability Standard CIP-002-5.1. Each Transmission Owner that owns Transmission Facilities that meet the criteria in Section 4.1.1.1 through 4.1.1.4 is required to perform a risk assessment as specified in Requirement R1 to identify its Transmission stations and Transmission substations, and their associated primary control centers, that if rendered inoperable or damaged as a result of a physical attack could result in instability, uncontrolled separation, or Cascading within an Interconnection. The Standard Drafting Team (SDT) expects this population will be small and that many Transmission Owners that meet the applicability of this standard will not actually identify any such Facilities. Only those Transmission Owners with Transmission stations or Transmission substations identified in the risk assessment (and verified under Requirement R2) have performance obligations under Requirements R3 through R6.

This standard also applies to Transmission Operators. A Transmission Operator's obligations under the standard, however, are only triggered if the Transmission Operator is notified by an applicable Transmission Owner under Requirement R3 that the Transmission Operator operates a primary control center that operationally controls a Transmission station(s) or Transmission substation(s) identified in the Requirement R1 risk assessment. A primary control center operationally controls a Transmission station

or Transmission substation when the control center's electronic actions can cause direct physical action at the identified Transmission station or Transmission substation, such as opening a breaker, as opposed to a control center that only has information from the Transmission station or Transmission substation and must coordinate direct action through another entity. Only Transmission Operators who are notified that they have primary control centers under this standard have performance obligations under Requirements R4 through R6. In other words, primary control center for purposes of this Standard is the control center that the Transmission Owner or Transmission Operator, respectively, uses as its primary, permanently-manned site to physically operate a Transmission station or Transmission substation that is identified in Requirement R1 and verified in Requirement R2. Control centers that provide back-up capability are not applicable, as they are a form of resiliency and intentionally redundant.

The SDT considered several options for bright line criteria that could be used to determine applicability and provide an initial threshold that defines the set of Transmission stations and Transmission substations that would meet the directives of the FERC order on physical security (*i.e.*, those that could cause instability, uncontrolled separation, or Cascading within an Interconnection). The SDT determined that using the criteria for Medium Impact Transmission Facilities in Attachment 1 of CIP-002-5.1 would provide a conservative threshold for defining which Transmission stations and Transmission substations must be included in the risk assessment in Requirement R1 of CIP-014. Additionally, the SDT concluded that using the CIP-002-5.1 Medium Impact criteria was appropriate because it has been approved by stakeholders, NERC, and FERC, and its use provides a technically sound basis to determine which Transmission Owners should conduct the risk assessment. As described in CIP-002-5.1, the failure of a Transmission station or Transmission substation that meets the Medium Impact criteria could have the capability to result in exceeding one or more Interconnection Reliability Operating Limits (IROLs). The SDT understands that using this bright line criteria to determine applicability may require some Transmission Owners to perform risk assessments under Requirement R1 that will result in a finding that none of their Transmission stations or Transmission substations would pose a risk of instability, uncontrolled separation, or Cascading within an Interconnection. However, the SDT determined that higher bright lines could not be technically justified to ensure inclusion of all Transmission stations and Transmission substations, and their associated primary control centers that, if rendered inoperable or damaged as a result of a physical attack could result in instability, uncontrolled separation, or Cascading within an Interconnection. Further guidance and technical basis for the bright line criteria for Medium Impact Facilities can be found in the Guidelines and Technical Basis section of CIP-002-5.1.

Additionally, the SDT determined that it was not necessary to include Generator Operators and Generator Owners in the Reliability Standard. First, Transmission stations or Transmission substations interconnecting generation facilities are considered when determining applicability. Transmission Owners will consider those Transmission stations and Transmission substations that include a Transmission station on the high side of the Generator Step-up transformer (GSU) using Applicability Section 4.1.1.1 and 4.1.1.2. As an example, a Transmission station or Transmission substation identified as a Transmission Owner facility that interconnects generation will be subject to the Requirement R1 risk assessment if it operates at 500kV or greater or if it is connected at 200 kV – 499kV to three or more other Transmission stations or Transmission substations and has an "aggregate weighted value" exceeding 3000 according to the table in Applicability Section 4.1.1.2. Second, the Transmission analysis or analyses conducted under

Requirement R1 should take into account the impact of the loss of generation connected to applicable Transmission stations or Transmission substations. Additionally, the FERC order does not explicitly mention generation assets and is reasonably understood to focus on the most critical Transmission Facilities. The diagram below shows an example of a station.

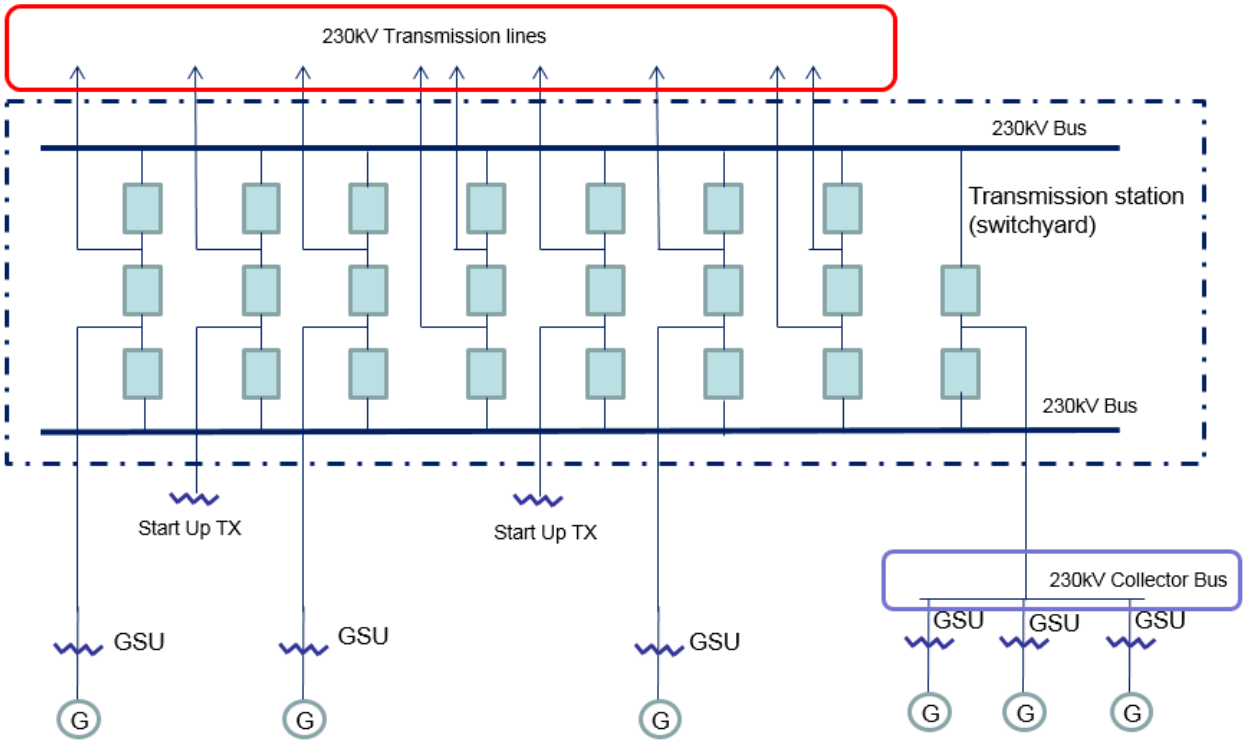

Also, the SDT uses the phrase "Transmission stations or Transmission substations" to recognize the existence of both stations and substations. Many entities in industry consider a substation to be a location with physical borders (i.e. fence, wall, etc.) that contains at least an autotransformer. Locations also exist that do not contain autotransformers, and many entities in industry refer to those locations as stations (switching stations or switchyards). Therefore, the SDT chose to use both "station" and "substation" to refer to the locations where groups of Transmission Facilities exist.

On the issue of joint ownership, the SDT recognizes that this issue is not unique to CIP-014, and expects that the applicable Transmission Owners and Transmission Operators will develop memorandums of understanding, agreements, Coordinated Functional Registrations, or procedures, etc., to designate responsibilities under CIP-014 when joint ownership is at issue, which is similar to what many entities have completed for other Reliability Standards.

The language contained in the applicability section regarding the collector bus is directly copied from CIP-002-5.1, Attachment 1, and has no additional meaning within the CIP-014 standard.

Timeline

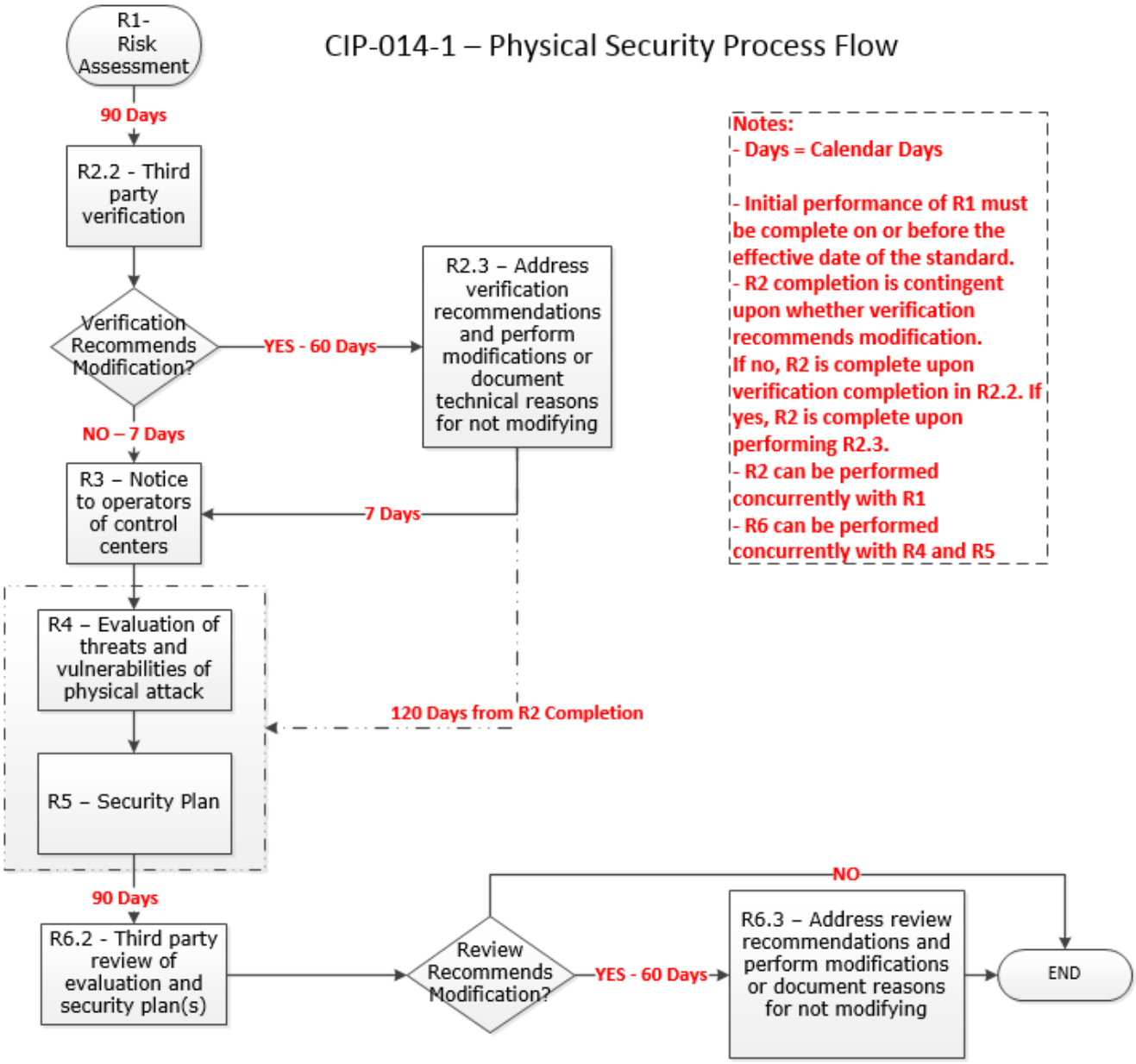
CIP-014-1 – Physical Security Process Flow
R1- Risk Assessment
90 Days
R2.2 - Third party verification
Verification Recommends Modification?
YES - 60 Days
R2.3 – Address verification recommendations and perform modifications or document technical reasons for not modifying
NO – 7 Days
R3 – Notice to operators of control centers
7 Days
R4 – Evaluation of threats and vulnerabilities of physical attack
120 Days from R2 Completion
R5 – Security Plan
90 Days
R6.2 - Third party review of evaluation and security plan(s)
Review Recommends Modification?
YES - 60 Days
NO
R6.3 – Address review recommendations and perform modifications or document reasons for not modifying
END
Notes:
- Days = Calendar Days
- Initial performance of R1 must be complete on or before the effective date of the standard.
- R2 completion is contingent upon whether verification recommends modification. If no, R2 is complete upon verification completion in R2.2. If yes, R2 is complete upon performing R2.3.
- R2 can be performed concurrently with R1
- R6 can be performed concurrently with R4 and R5

Rationale

During development of this standard, text boxes were embedded within the standard to explain the rationale for various parts of the standard. Upon BOT approval, the text from the rationale text boxes was moved to this section.

Rationale for Requirement R1 (This is for the old Requirement R1 in CIP-014-3):
This requirement meets the FERC directive from paragraph 6 of its March 7, 2014 order on physical security to perform a risk assessment to identify which facilities if rendered inoperable or damaged could impact an Interconnection through instability, uncontrolled separation, or cascading failures. The requirement is not intended to bring within the scope of the standard a Transmission station or Transmission substation unless the applicable Transmission Owner determines through technical studies and analyses based on objective analysis, technical expertise, operating experience and experienced judgment that the loss of such facility would have a critical impact on the operation of the Interconnection in the event the asset is rendered inoperable or damaged. In the November 20, 2014 Order, FERC reiterated that "only an instability that has a "critical impact on the operation of the interconnection" warrants finding that the facility causing the instability is critical under Requirement R1." The Transmission Owner may determine the criteria for critical impact by considering, among other criteria, any of the following:

- Criteria or methodology used by Transmission Planners or Planning Coordinators in TPL-001-4, Requirement R6
- NERC EOP-004-2 reporting criteria
- Area or magnitude of potential impact

Requirement R1 also meets the FERC directive for periodic reevaluation of the risk assessment by requiring the risk assessment to be performed every 30 months (or 60 months for an entity that has not identified in a previous risk assessment any Transmission stations or Transmission substations that if rendered inoperable or damaged could result in instability, uncontrolled separation, or Cascading within an Interconnection).

After identifying each Transmission station and Transmission substation that meets the criteria in Requirement R1, it is important to additionally identify the primary control center that operationally controls that Transmission station or Transmission substation (*i.e.,* the control center whose electronic actions can cause direct physical actions at the identified Transmission station and Transmission substation, such as opening a breaker, compared to a control center that only has the ability to monitor the Transmission station and Transmission substation and, therefore, must coordinate direct physical action through another entity).

Rationale for Requirement R2 (This is now Requirement R6 in CIP-014-4):
This requirement meets the FERC directive from paragraph 11 in the order on physical security requiring verification by an entity other than the owner or operator of the risk assessment performed under Requirement R1.

This requirement provides the flexibility for a Transmission Owner to select registered and non-registered entities with transmission planning or analysis experience to perform the verification of the Requirement R1 risk assessment. The term "unaffiliated" means that the selected verifying entity cannot be a corporate affiliate (*i.e.*, the verifying entity cannot be an entity that controls, is controlled by, or is under common control with, the Transmission owner). The verifying entity also cannot be a division of the Transmission Owner that operates as a functional unit. The term "unaffiliated" is not intended to prohibit a governmental entity from using another government entity to be a verifier under Requirement R2.

Requirement R2 also provides the Transmission Owner the flexibility to work with the verifying entity throughout the Requirement R1 risk assessment, which for some Transmission Owners may be more efficient and effective. In other words, a Transmission Owner could coordinate with their unaffiliated verifying entity to perform a Requirement R1 risk assessment to satisfy both Requirement R1 and Requirement R2 concurrently.

Planning Coordinator is a functional entity listed in Part 2.1. The Planning Coordinator and Planning Authority are the same entity as shown in the NERC Glossary of Terms Used in NERC Reliability Standards.

Rationale for Requirement R3 (This is now Requirement R7 in CIP-014-4):
Some Transmission Operators will have obligations under this standard for certain primary control centers. Those obligations, however, are contingent upon a Transmission Owner first identifying which Transmission stations and Transmission substations meet the criteria specified by Requirement R1, as verified according to Requirement R2. This requirement is intended to ensure that a Transmission Operator that has operational control of a primary control center identified in Requirement R1, Part 1.2 of a Transmission station or Transmission substation verified according to Requirement R2 receives notice of such identification so that the Transmission Operator may timely fulfill its resulting obligations under Requirements R4 through R6. Since the timing obligations in Requirements R4 through R6 are based upon completion of Requirement R2, the Transmission Owner must also include notice of the date of completion of Requirement R2. Similarly, the Transmission Owner must notify the Transmission Operator of any removals from identification that result from a subsequent risk assessment under Requirement R1 or the verification process under Requirement R2.

Rationale for Requirement R4 (This is now Requirement R8 in CIP-014-4):
This requirement meets the FERC directive from paragraph 8 in the order on physical security that the reliability standard must require tailored evaluation of potential threats and vulnerabilities to facilities identified in Requirement R1 and verified according to Requirement R2. Threats and vulnerabilities may vary from facility to facility based on factors such as the facility's location, size, function, existing protections, and attractiveness of the target. As such, the requirement does not mandate a one-size-fits-all approach but requires entities to account for the unique characteristics of their facilities.

Requirement R4 does not explicitly state when the evaluation of threats and vulnerabilities must occur or be completed. However, Requirement R5 requires that the entity's security plan(s), which is dependent on the Requirement R4 evaluation, must be completed within 120 calendar days following completion of Requirement R2. Thus, an entity has the flexibility when to complete the Requirement R4 evaluation,

provided that it is completed in time to comply with the requirement in Requirement R5 to develop a physical security plan 120 calendar days following completion of Requirement R2.

Rationale for Requirement R5 (This is now Requirement R9 in CIP-014-4):
This requirement meets the FERC directive from paragraph 9 in the order on physical security requiring the development and implementation of a security plan(s) designed to protect against attacks to the facilities identified in Requirement R1 based on the assessment performed under Requirement R4.

Rationale for Requirement R6 (This is now Requirement R10 in CIP-014-4):
This requirement meets the FERC directive from paragraph 11 in the order on physical security requiring review by an entity other than the owner or operator with appropriate expertise of the evaluation performed according to Requirement R4 and the security plan(s) developed according to Requirement R5.

As with the verification required by Requirement R2, Requirement R6 provides Transmission Owners and Transmission Operators the flexibility to work with the third party reviewer throughout the Requirement R4 evaluation and the development of the Requirement R5 security plan(s). This would allow entities to satisfy their obligations under Requirement R6 concurrent with the satisfaction of their obligations under Requirements R4 and R5.

NERC
NORTH AMERICAN ELECTRIC RELIABILITY CORPORATION

Technical Rationale

Project 2023-06 CIP-014 Risk Assessment Refinement
Reliability Standard CIP-014-4 | ~~September 2024~~June 2025

CIP-014-4 – Physical Security

In performing the risk assessment, the Transmission Owner should first identify their population of Transmission stations and Transmission substations that meet the criteria contained in Attachment 1. The Standard requires the Transmission Owner to perform a risk assessment, consisting of ~~a~~ transmission ~~analysis,~~analyses to determine which of those Transmission stations and Transmission Substations, if rendered inoperable or damaged, could result in instability, uncontrolled separation, or Cascading within an Interconnection.

The purpose of Reliability Standard CIP-014 is to protect Transmission stations and Transmission substations, and their associated primary control centers, that if rendered inoperable or damaged, as a result of a physical attack, could result in instability, uncontrolled separation, or Cascading within an Interconnection. To properly identify candidates for such Transmission station(s) and Transmission substation(s), the Transmission Owner shall evaluate the criteria listed in Attachment 1.

Rationale for Requirement R1

In the previous version of CIP-014, the 30-month time frame and the 24-month planned-to-be-in-service date could, if not carefully applied, lead to gaps between models and study horizons. Per the Standard Authorization Request (SAR), CIP-014-4 has consolidated these multiple timelines into one.

~~Performing Risk Assessments~~

Requirement R1 is ~~developed~~revised to ensure that each Transmission Owner establishes a list of applicable Transmission station(s) or Transmission substation(s) in accordance with Attachment 1. Aligning the 36 calendar months look ahead in Requirement R1 with the 36 calendar month risk assessment cycle ensures that system topology of the cases used to assess applicability is consistent with the system topology in the risk assessment models.

Transmission Owners shall review and, if necessary, update the list of applicable Transmission station(s) or Transmission substation(s) per Attachment 1 at least once every 36 calendar months. The list of applicable Transmission station(s) or Transmission substation(s) shall include existing or planned to be in service within 36 calendar months Transmission station(s) and Transmission substation(s). The 36 calendar months cycle for updating the list of applicable Transmission station(s) or Transmission substation(s) per Attachment 1 aligns with the annual cycle for performing Planning Assessments per NERC Standard TPL-001. The 36 calendar months risk assessment study cycle aligns with the 36 calendar months planned-to-be-in-service date. "Planned to be in-service" should be taken to mean all Transmission station(s) and Transmission substation(s) as modeled in the base cases for the Near-Term Transmission Planning Horizon.

Rationale for Requirement R2

~~Each Transmission Owner shall, at a minimum, consider the specifications in Requirement R2 for general applicability to their systems, and whether specifications and thresholds need to be stipulated for each Parts 2.1 and 2.2 in their documented criteria.~~

The distance chosen in requirement R2 is based on guidelines that considered a variety of plausible attack scenarios capable of rendering a substation inoperable.

~~A certain amount of discretion and flexibility is intended to be allowable for each Transmission Owner in their respective proximity criteria to document, establish, and demonstrate from a technical basis that various aspects of proximity for their Transmission station(s) or Transmission substation(s) either are or are not appropriate to consider in their risk assessments.~~

The drafting team choose 1500 feet or 457 meters (the shortest distance, measured substation fence line to substation fence line) in Requirement R2 is based on the study from America's Cyber Defense Agency developed in partnership with the Federal Bureau of Investigation (FBI). The Department of Homeland Security (DHS)-Department of Justice (DOJ) Bomb Threat Stand-Off Card is a quick reference guide providing recommended evacuation and shelter-in-place distances for various types and sizes of Improvised Explosive Devices (IED).[1]

Accurate simulation of the event was deemed a priority of the Drafting Team (DT). The DT felt that ownership of proximate substations, as identified in Requirement R2, was irrelevant to Bulk Electric System (BES) impact.

Rationale for Requirement R3

Per Requirement R3, each Transmission Owner is required to have a risk assessment methodology, ~~but the SDT intends for each TO to have flexibility to define its own methodology,~~ including the criteria by which analytical results will be examined to identify Transmission station(s) or Transmission substation(s) that if rendered inoperable or damaged as a result of a physical attack could result in instability, uncontrolled separation, or Cascading within an Interconnection. The ~~TO~~Transmission Owner is not required to develop its own methodology and is free to use a methodology developed elsewhere, such as in coordination with neighboring ~~TOs or~~ Transmission Owners or Independent System Operators (ISOs).

Rationale for Requirement R3, Part 3.1

~~TOs~~Transmission Owners should ~~have the flexibility to~~ determine the amount of ~~acceptable~~unacceptable load loss~~, acceptable~~ and generation loss~~, or other measurements of system response~~ when determining the impact of an event to the Transmission system. Criteria for measures such as load loss or generation loss should consider the impact to the Interconnection ~~instead of local impacts~~.

Large loss of generation or load due to the evaluated disturbance~~, as well as consequences of isolating faulted equipment,~~ could result in severe System impacts. The documented risk assessment methodology shall include the amount of ~~acceptable~~unacceptable load loss~~, the amount of acceptable~~ and generation

[1] https://www.cisa.gov/resources-tools/resources/dhs-doj-bomb-threat-stand-card

loss, ~~and post-event response resulting~~that could result in instability, uncontrolled separation, or Cascading within an Interconnection. Conditions and thresholds used for determining critical Transmission station(s) or Transmission substation(s), i.e., those that if rendered inoperable or damaged as a result of a physical attack could result in instability, uncontrolled separation, or Cascading within an Interconnection, should be part of the documented risk assessment methodology.

It is up to the ~~TO~~Transmission Owner to identify post-event measures that can be used to assess the criticality of a Transmission substation or Transmission substation. Suggested measures are listed below. A ~~TO~~Transmission Owner can decide that one or more of the items are not applicable to their location within the interconnection and if any additional items should be included.

~~These thresholds can be treated as proxies for other conditions such as excessive frequency deviation.~~
The following parameters can be used to evaluate the steady-state and/or dynamic analysis:

- Steady state voltages
- Transient voltage response
- Thermal loading of Facilities
- Relay loadability
- Rotor angle stability
- Frequency exceeding generator limits
- Frequency stability
- Acceptable damping of oscillations
- Cascading line tripping
- Steady-state voltage stability

Rationale for Requirement R3, Part 3.2
The performance of both steady state and dynamics simulations is required for all applicable Transmission station(s) and substation(s). Dynamic simulations are required by the ~~SAR after NERC and FERC determined that~~Standard because exclusively performing steady-state simulations ~~alone~~ are insufficient for determining whether the loss of a Transmission station or Transmission substation could result in instability, uncontrolled separation, or Cascading within an Interconnection.

~~Transmission Owners shall develop documented criteria for the conditions listed in Requirement R3, Part 3.1.1, which includes branch thermal exceedance thresholds, bus voltage exceedance thresholds, load loss thresholds, generation loss thresholds, etc.~~
Rationale for Requirement R3, Part 3.3
~~The DT believes that~~A simulation of a ~~fault is~~Fault provides a reasonable assumption for possible events that could impact a single Transmission station or Transmission substation, and for events that could simultaneously impact multiple Transmission stations or Transmission substations.

Rationale for Requirement R3, Part 3.4

The requirement that simulations shall assume the loss of communications and system protection is consistent with the SAR. ~~It is also consistent~~In accordance with the ~~use of~~SAR, the term "inoperable" ~~in the standard.~~includes the total loss of communication and protection equipment at the substation, necessitating delayed clearance from far-end relaying to isolate the event's impacts. Each simulation should also include the removal of all Elements that Protection Systems and other controls are expected to automatically disconnect for the event.

~~**Rationale for Requirement R3, Part 3.4.1**~~

~~The DT believes that the use of delayed or remote clearing times is consistent with the description of a Transmission station or Transmission substation being rendered inoperable by an event that disabled local protection systems.~~

~~**Rationale for Requirement R3, Part 3.4.2**~~

While there are commonly used generic clearing times for remote clearing that are consistent across the industry, actual clearing times can be shorter or longer depending on conditions and design considerations at an individual ~~TO~~Transmission Owner. The difference of a few cycles can have a significant impact on the transient behavior of generating units, therefore, it is required that the risk analysis use actual ~~clearing times~~ or more conservative ~~values~~clearing time.

Rationale for Requirement R4

Joint ownership of Transmission substations and Transmission stations was discussed in the Guidelines and Technical Basis of previous versions of the CIP-014-3 standard, but the needed prescription on this issue was missing from the standard language. Because the CIP-014-4 Risk Assessment Refinement SAR calls for clarification regarding Transmission substations and Transmission stations of differing ownership, this section was ~~moved to its own requirement within~~clarified in Requirement R4.

Rationale for Requirement R5

An objective of the CIP-014-3 Risk Assessment Refinement SAR was to align study periods, frequency of studies and the powerflow models used for the studies. A 36-month periodicity was chosen for the R5 risk assessment to reduce the periodicity options from previous versions of the standard. Additionally, a single study periodicity is more easily aligned with project in-service date considerations and model choices. As called for in Project Scope item 3 of the CIP-014-3 Risk Assessment Refinement SAR, the risk assessment must comply with the methodology developed in R3, so this language was explicitly added to R5.

Transmission Owners shall review and, if necessary, update the list of applicable Transmission station(s) or Transmission substation(s) per Attachment 1 at least once every 36 months. The list of applicable Transmission station(s) or Transmission substation(s) shall include existing or planned to be in service within 36 months Transmission station(s) and Transmission substation(s). The 36-month cycle for updating the list of applicable Transmission station(s) or Transmission substation(s) per Attachment 1 aligns with the annual cycle for performing Planning Assessments per NERC Standard TPL-001. The 36-month risk assessment study cycle aligns with the 36-month planned-to-be-in-service date.

In addition to the performance of the risk assessment using Transmission station(s) and Transmission substation(s) identified in Requirement R1, any proximate Transmission station(s) and Transmission substation(s) identified in Requirement R2 should also be included in the risk assessment. Furthermore, any Transmission station(s) and Transmission substation(s) assessed due to having been identified per Requirement R1 should also be run as part of a proximate Transmission station(s) and Transmission substation(s) group per Requirement R2 if such an identification is made.

Rationale for Requirement R5, Part 5.1

If a Transmission Owner performs a steady state analysis and identifies a Transmission station or substation that, if rendered inoperable or damaged, could result in instability, uncontrolled separation, or Cascading within an Interconnection, then dynamic analysis is not required for that Transmission station or substation. If a Transmission Owner performs a dynamic analysis and identifies a Transmission station or substation that, if rendered inoperable or damaged, could result in instability, uncontrolled separation, or Cascading within an Interconnection, then steady state analysis is not required for that Transmission station or substation.

Rationale for Requirement R5, Part 5.2

The intent of this Requirement is that Transmission Owners do not have to reassess already identified and protected Transmission stations or substations (Requirement R5.3 and Requirements R7 through R10 still apply to those Transmission stations or substations). A new risk assessment will need to be performed if the Transmission owner wishes to determine whether or not a Transmission station or substation can be removed from identification and protection as outlined in Requirement R7.1.

Rationale for Requirement R5, Part 5.3

Identification of Primary Control Centers

: After completing the risk assessment under Requirement R5 and verified under Requirement R6, it is important to additionally identify the primary control center that operationally controls each Transmission station or Transmission substation, that if rendered inoperable or damaged could result in instability, uncontrolled separation, or Cascading within an Interconnection. A primary control center "operationally controls" a Transmission station or Transmission substation when the control center's electronic actions can cause direct physical actions at the identified Transmission station and Transmission substation, such as opening a breaker.

~~**Requirement R6 through Requirement R10 are Requirement R2 through Requirement R6 in CIP-014-3. The Drafting Team did not make any changes to these Requirements. Therefore, the technical rationales are not provided here.**~~

Rationale for Implementation Plan

The Drafting Team has determined that 24 calendar months for the CIP-014-4 implementation plan would allow adequate time for Transmission Owners and Transmission Operators to determine applicability, develop criteria, write or revise methodologies, perform assessments, and procure unaffiliated third parties for risk assessment verification (which some Transmission Owners have performed concurrently with their risk assessment analyses.

CIP-014-4 Flowchart

The flowchart is a concise outline that guides through the steps for completing the risk assessment at least once every 36 calendar months, based on the Applicability in Attachment 1 and Requirements R1-R5.

(Added graphics)

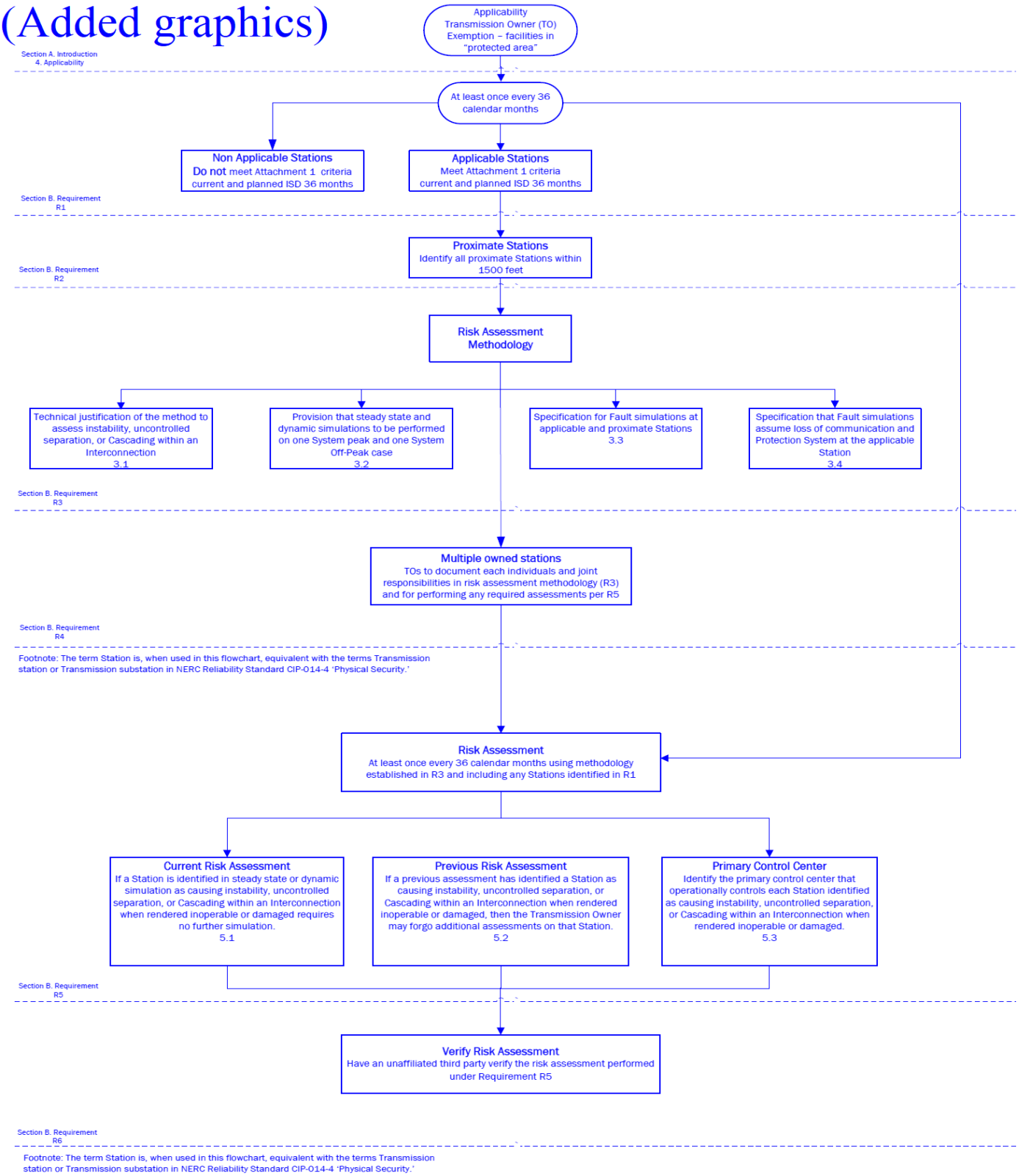

Technical Rationale for Reliability Standard CIP-014-3

This section contains a "cut and paste" of the former Guidelines and Technical Basis (GTB) as-is of from CIP-014-3 standard to preserve any historical references. No modifications have been made.

Requirement R2 (This is Requirement R6 in CIP-014-4)
This requirement specifies verification of the risk assessment performed under Requirement R1 by an entity other than the owner or operator of the Requirement R1 risk assessment.

A verification of the risk assessment by an unaffiliated third party, as specified in Requirement R2, could consist of:

1. Certifying that the Requirement R1 risk assessment considers the Transmission stations and Transmission substations identified in Applicability Section 4.1.1.
2. Review of the model used to conduct the risk assessment to ensure it contains sufficient system topology to identify Transmission stations and Transmission substations that if rendered inoperable or damaged could cause instability, uncontrolled separation, or Cascading within an Interconnection.
3. Review of the Requirement R1 risk assessment methodology.

This requirement provides the flexibility for a Transmission Owner to select from unaffiliated registered and non-registered entities with transmission planning or analysis experience to perform the verification of the Requirement R1 risk assessment. The term unaffiliated means that the selected verifying entity cannot be a corporate affiliate (*i.e.,* the verifying or third party reviewer cannot be an entity that corporately controls, is controlled by or is under common control with, the Transmission Owner). The verifying entity also cannot be a division of the Transmission Owner that operates as a functional unit.

The prohibition on registered entities using a corporate affiliate to conduct the verification, however, does not prohibit a governmental entity (e.g., a city, a municipality, a U.S. federal power marketing agency, or any other political subdivision of U.S. or Canadian federal, state, or provincial governments) from selecting as the verifying entity another governmental entity within the same political subdivision. For instance, a U.S. federal power marketing agency may select as its verifier another U.S. federal agency to conduct its verification so long as the selected entity has transmission planning or analysis experience. Similarly, a Transmission Owner owned by a Canadian province can use a separate agency of that province to perform the verification. The verifying entity, however, must still be a third party and cannot be a division of the registered entity that operates as a functional unit.

Requirement R2 also provides that the "verification may occur concurrent with or after the risk assessment performed under Requirement R1." This provision is designed to provide the Transmission Owner the flexibility to work with the verifying entity throughout (*i.e.,* concurrent with) the risk assessment, which for some Transmission Owners may be more efficient and effective. In other words, a Transmission Owner could collaborate with their unaffiliated verifying entity to perform the risk assessment under Requirement R1 such that both Requirement R1 and Requirement R2 are satisfied

concurrently. The intent of Requirement R2 is to have an entity other than the owner or operator of the facility to be involved in the risk assessment process and have an opportunity to provide input. Accordingly, Requirement R2 is designed to allow entities the discretion to have a two-step process, where the Transmission Owner performs the risk assessment and subsequently has a third party review that assessment, or a one-step process, where the entity collaborates with a third party to perform the risk assessment.

Characteristics to consider in selecting a third party reviewer could include:

- Registered Entity with applicable planning and reliability functions.
- Experience in power system studies and planning.
- The entity's understanding of the MOD standards, TPL standards, and facility ratings as they pertain to planning studies.
- The entity's familiarity with the Interconnection within which the Transmission Owner is located.

With respect to the requirement that Transmission owners develop and implement procedures for protecting confidential and sensitive information, the Transmission Owner could have a method for identifying documents that require confidential treatment. One mechanism for protecting confidential or sensitive information is to prohibit removal of sensitive or confidential information from the Transmission Owner's site. Transmission Owners could include such a prohibition in a non-disclosure agreement with the verifying entity.

A Technical feasibility study is not required in the Requirement R2 documentation of the technical basis for not modifying the identification in accordance with the recommendation.

On the issue of the difference between a verifier in Requirement R2 and a reviewer in Requirement R6, the SDT indicates that the verifier will confirm that the risk assessment was completed in accordance with Requirement R1, including the number of Transmission stations and substations identified, while the reviewer in Requirement R6 is providing expertise on the manner in which the evaluation of threats was conducted in accordance with Requirement R4, and the physical security plan in accordance with Requirement R5. In the latter situation there is no verification of a technical analysis, rather an application of experience and expertise to provide guidance or recommendations, if needed.

Parts 2.4 and 6.4 require the entities to have procedures to protect the confidentiality of sensitive or confidential information. Those procedures may include the following elements:

1. Control and retention of information on site for third party verifiers/reviewers.
2. Only "need to know" employees, etc., get the information.
3. Marking documents as confidential
4. Securely storing and destroying information when no longer needed.

5. Not releasing information outside the entity without, for example, General Counsel sign-off.

Requirement R3 (This is now Requirement R7 in CIP-014-4)
Some Transmission Operators will have obligations under this standard for certain primary control centers. Those obligations, however, are contingent upon a Transmission Owner first completing the risk assessment specified by Requirement R1 and the verification specified by Requirement R2. Requirement R3 is intended to ensure that a Transmission Operator that has operational control of a primary control center identified in Requirement R1 receive notice so that the Transmission Operator may fulfill the rest of the obligations required in Requirements R4 through R6. Since the timing obligations in Requirements R4 through R6 are based upon completion of Requirement R2, the Transmission Owner must also include within the notice the date of completion of Requirement R2. Similarly, the Transmission Owner must notify the Transmission Operator of any removals from identification that result from a subsequent risk assessment under Requirement R1 or as a result of the verification process under Requirement R2.

Requirement R4 (This is now Requirement R8 in CIP-014-4)
This requirement requires owners and operators of facilities identified by the Requirement R1 risk assessment and that are verified under Requirement R2 to conduct an assessment of potential threats and vulnerabilities to those Transmission stations, Transmission substations, and primary control centers using a tailored evaluation process. Threats and vulnerabilities may vary from facility to facility based on any number of factors that include, but are not limited to, location, size, function, existing physical security protections, and attractiveness as a target.

In order to effectively conduct a threat and vulnerability assessment, the asset owner may be the best source to determine specific site vulnerabilities, but current and evolving threats may best be determined by others in the intelligence or law enforcement communities. A number of resources have been identified in the standard, but many others exist and asset owners are not limited to where they may turn for assistance. Additional resources may include state or local fusion centers, U.S. Department of Homeland Security, Federal Bureau of Investigations (FBI), Public Safety Canada, Royal Canadian Mounted Police, and InfraGard chapters coordinated by the FBI.

The Responsible Entity is required to take a number of factors into account in Parts 4.1 to 4.3 in order to make a risk-based evaluation under Requirement R4.

To assist in determining the current threat for a facility, the prior history of attacks on similarly protected facilities should be considered when assessing probability and likelihood of occurrence at the facility in question.

Resources that may be useful in conducting threat and vulnerability assessments include:

- NERC Security Guideline for the Electricity Sector: Physical Security.
- NERC Security Guideline: Physical Security Response.

- ASIS International General Risk Assessment Guidelines.
- ASIS International Facilities Physical Security Measure Guideline.
- ASIS International Security Management Standard: Physical Asset Protection.
- Whole Building Design Guide - Threat/Vulnerability Assessments.

Requirement R5 (This is now Requirement R9 in CIP-014-4)
This requirement specifies development and implementation of a security plan(s) designed to protect against attacks to the facilities identified in Requirement R1 based on the assessment performed under Requirement R4.

Requirement R5 specifies the following attributes for the physical security plan:

- *Resiliency or security measures designed collectively to deter, detect, delay, assess, communicate, and respond to potential physical threats and vulnerabilities identified during the evaluation conducted in Requirement R4.*

  Resiliency may include, among other things:

  a. System topology changes,

  b. Spare equipment,

  c. Construction of a new Transmission station or Transmission substation.

  While most security measures will work together to collectively harden the entire site, some may be allocated to protect specific critical components. For example, if protection from gunfire is considered necessary, the entity may only install ballistic protection for critical components, not the entire site.

- *Law enforcement contact and coordination information.*

  Examples of such information may be posting 9-1-1 for emergency calls and providing substation safety and familiarization training for local and federal law enforcement, fire department, and Emergency Medical Services.

- *A timeline for executing the physical security enhancements and modifications specified in the physical security plan.*

  Entities have the flexibility to prioritize the implementation of the various resiliency or security enhancements and modifications in their security plan according to risk, resources, or other factors. The requirement to include a timeline in the physical security plan for executing the actual physical security enhancements and modifications does not also require that the enhancements and modifications be completed within 120 days. The actual timeline may extend beyond the 120 days, depending on the amount of work to be completed.

- *Provisions to evaluate evolving physical threats, and their corresponding security measures, to the Transmission station(s), Transmission substation(s), or primary control center(s).*

A registered entity's physical security plan should include processes and responsibilities for obtaining and handling alerts, intelligence, and threat warnings from various sources. Some of these sources could include the ERO, ES-ISAC, and US and/or Canadian federal agencies. This information should be used to reevaluate or consider changes in the security plan and corresponding security measures of the security plan found in R5.

Incremental changes made to the physical security plan prior to the next required third party review do not require additional third party reviews.

Requirement R6 (This is now Requirement R10 in CIP-014-4)

This requirement specifies review by an entity other than the Transmission Owner or Transmission Operator with appropriate expertise for the evaluation performed according to Requirement R4 and the security plan(s) developed according to Requirement R5. As with Requirement R2, the term unaffiliated means that the selected third party reviewer cannot be a corporate affiliate (*i.e.,* the third party reviewer cannot be an entity that corporately controls, is controlled by or is under common control with, the Transmission Operator). A third party reviewer also cannot be a division of the Transmission Operator that operates as a functional unit.

As noted in the guidance for Requirement R2, the prohibition on registered entities using a corporate affiliate to conduct the review, however, does not prohibit a governmental entity from selecting as the third party reviewer another governmental entity within the same political subdivision. For instance, a city or municipality may use its local enforcement agency, so long as the local law enforcement agency satisfies the criteria in Requirement R6. The third party reviewer, however, must still be a third party and cannot be a division of the registered entity that operates as a functional unit.

The Responsible Entity can select from several possible entities to perform the review:

- *An entity or organization with electric industry physical security experience and whose review staff has at least one member who holds either a Certified Protection Professional (CPP) or Physical Security Professional (PSP) certification.*

  In selecting CPP and PSP for use in this standard, the SDT believed it was important that if a private entity such as a consulting or security firm was engaged to conduct the third party review, they must tangibly demonstrate competence to conduct the review. This includes electric industry physical security experience and either of the premier security industry certifications sponsored by ASIS International. The ASIS certification program was initiated in 1977, and those that hold the CPP certification are board certified in security management. Those that hold the PSP certification are board certified in physical security.

- *An entity or organization approved by the ERO.*
- *A governmental agency with physical security expertise.*
- *An entity or organization with demonstrated law enforcement, government, or military physical security expertise.*

As with the verification under Requirement R2, Requirement R6 provides that the "review may occur concurrently with or after completion of the evaluation performed under Requirement R4 and the security plan development under Requirement R5." This provision is designed to provide applicable Transmission Owners and Transmission Operators the flexibility to work with the third party reviewer throughout (*i.e.,* concurrent with) the evaluation performed according to Requirement R4 and the security plan(s) developed according to Requirement R5, which for some Responsible Entities may be more efficient and effective. In other words, a Transmission Owner or Transmission Operator could collaborate with their unaffiliated third party reviewer to perform an evaluation of potential threats and vulnerabilities (Requirement R4) and develop a security plan (Requirement R5) to satisfy Requirements R4 through R6 simultaneously. The intent of Requirement R6 is to have an entity other than the owner or operator of the facility to be involved in the Requirement R4 evaluation and the development of the Requirement R5 security plans and have an opportunity to provide input on the evaluation and the security plan. Accordingly, Requirement R6 is designed to allow entities the discretion to have a two-step process, where the Transmission Owner performs the evaluation and develops the security plan itself and then has a third party review that assessment, or a one-step process, where the entity collaborates with a third party to perform the evaluation and develop the security plan.

Rationale for Attachment 1

The DT moved the applicability language from CIP-014-3 to Attachment 1 to make the standard easier to read.

The purpose of Reliability Standard CIP~~-014-4~~-014 is to protect Transmission stations and Transmission substations, and their associated primary control centers~~,~~ that if rendered inoperable or damaged as a result of a physical attack~~,~~ could result in instability, uncontrolled separation, or Cascading within an Interconnection. To properly include those entities that own or operate such Facilities, the Reliability Standard CIP~~-014-4 primarily~~-014 first applies to Transmission Owners that own Transmission Facilities that meet the specific ~~applicability~~ criteria in ~~Attachment 1~~Applicability Section 4.1.1.1 through 4.1.1.4. The Facilities described in ~~Attachment 1~~Applicability Section 4.1.1.1 through 4.1.1.4 mirror those Transmission Facilities that meet the bright line criteria for "Medium Impact" Transmission Facilities under Attachment 1 of Reliability Standard CIP~~-002-5.1a~~002-5.1. Each Transmission Owner that owns Transmission Facilities that meet the criteria in ~~Attachment 1~~Section 4.1.1.1 through 4.1.1.4 is required to perform a risk assessment as specified in Requirement R1 to identify its Transmission stations and Transmission substations, and their associated primary control centers, that if rendered inoperable or damaged as a result of a physical attack could result in instability, uncontrolled separation, or Cascading within an Interconnection. The Standard Drafting Team (SDT) expects this population will be small and that many Transmission Owners that meet the applicability of this standard will not actually identify any such Facilities. Only those Transmission Owners with Transmission stations or Transmission substations identified in the risk assessment (and verified under Requirement R2) have performance obligations under Requirements R3 through R6.

This standard also applies to Transmission Operators. A Transmission Operator's obligations under the standard, however, are only triggered if the Transmission Operator is notified by an applicable Transmission Owner under Requirement ~~R7~~R3 that the Transmission Operator operates a primary control center that operationally controls a Transmission station(s) or Transmission substation(s) identified in the

Requirement ~~R5~~R1 risk assessment. A primary control center operationally controls a Transmission station or Transmission substation when the control center's electronic actions can cause direct physical action at the identified Transmission station or Transmission substation, such as opening a breaker, as opposed to a control center that only has information from the Transmission station or Transmission substation and must coordinate direct action through another entity. Only Transmission Operators who are notified that they have primary control centers under this standard have performance obligations under Requirements ~~R8~~R4 through ~~R10. Primary~~R6. In other words, primary control center~~,~~ for purposes of this Standard~~,~~ is the control center that the Transmission Owner or Transmission Operator, respectively, uses as its primary, permanently-manned site to physically operate a Transmission station or Transmission substation that is identified in Requirement ~~R5~~R1 and verified in Requirement ~~R6~~R2. Control centers that provide back-up capability are not applicable, as they are a form of resiliency and intentionally redundant.

The ~~DT~~SDT considered several options for bright line criteria that could be used to determine applicability and provide an initial threshold that defines the set of Transmission stations and Transmission substations that would meet the directives of the FERC order on physical security (*i.e.*, those that could cause instability, uncontrolled separation, or Cascading within an Interconnection). The SDT determined that ~~continuing to use~~using the criteria for Medium Impact Transmission Facilities in Attachment 1 of CIP-~~002-5.1a~~002-5.1 would provide a conservative threshold for defining which Transmission stations and Transmission substations ~~that~~ must be included in the risk assessment in Requirement ~~R5~~R1 of CIP-~~014-4~~014. Additionally, the ~~DT~~SDT concluded that using ~~CIP002-5.1a~~the CIP-002-5.1 Medium Impact criteria was appropriate because it has been approved by stakeholders, NERC, and FERC, and its use provides a technically sound basis to determine which Transmission Owners should conduct the risk assessment. As described in CIP-~~002-5.1a~~002-5.1, the failure of a Transmission station or Transmission substation that meets the Medium Impact criteria could have the capability to result in exceeding one or more Interconnection Reliability Operating Limits (IROLs). The SDT understands that using this bright line criteria to determine applicability may require some Transmission Owners to perform risk assessments under Requirement R1 that will result in a finding that none of their Transmission stations or Transmission substations would pose a risk of instability, uncontrolled separation, or Cascading within an Interconnection. However, the SDT determined that higher bright lines could not be technically justified to ensure inclusion of all Transmission stations and Transmission substations, and their associated primary control centers that, if rendered inoperable or damaged as a result of a physical attack could result in instability, uncontrolled separation, or Cascading within an Interconnection. Further guidance and technical basis for the bright line criteria for Medium Impact Facilities can be found in the Guidelines and Technical Basis section of CIP-002-5.1.

Additionally, the ~~DT~~SDT determined that it was not necessary to include Generator Operators and Generator Owners in the Reliability Standard. First, Transmission stations or Transmission substations interconnecting generation facilities are considered when determining applicability. Transmission Owners will consider those Transmission stations and Transmission substations that include a Transmission station on the high side of the Generator Step-up transformer (GSU) using ~~Attachment 1, criteria 1~~Applicability Section 4.1.1.1 and ~~2~~4.1.1.2. As an example, a Transmission station or Transmission substation identified as a Transmission Owner facility that interconnects generation will be subject to the Requirement ~~R5~~R1

risk assessment if it operates at 500kV or greater or if it is connected at 200 kV – 499kV to three or more other Transmission stations or Transmission substations and has an "aggregate weighted value" exceeding 3000 according to the table in ~~Attachment 1, criteria 2~~Applicability Section 4.1.1.2. Second, the Transmission analysis or analyses conducted under Requirement ~~R5~~R1 should take into account the impact of the loss of generation connected to applicable Transmission stations or Transmission substations. Additionally, the FERC order does not explicitly mention generation assets and is reasonably understood to focus on the most critical Transmission Facilities. The diagram below shows an example of a station.

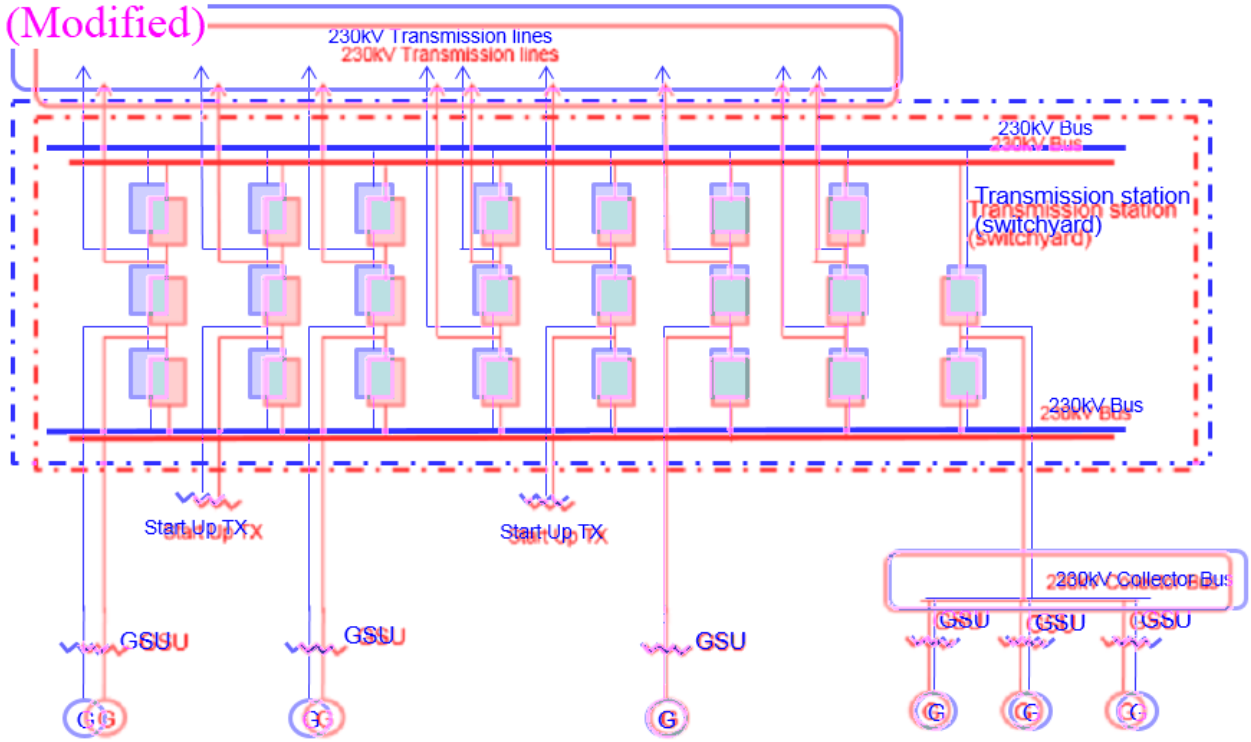

~~Figure from CIP-014-3 Guidelines and Technical Basis~~

Also, the ~~DT~~SDT uses the phrase "Transmission ~~station(s)~~stations or Transmission ~~substation(s)~~substations" to recognize the existence of both stations and substations. Many entities in industry consider a substation to be a location with physical borders (i.e.~~,~~ fence, wall, etc.) that contains at least an autotransformer. Locations also exist that do not contain autotransformers, and many entities in industry refer to those locations as stations (switching stations or switchyards). Therefore, the ~~DT~~SDT chose to use both "station" and "substation" to refer to the locations where groups of Transmission Facilities exist.

On the issue of joint ownership, the SDT recognizes that this issue is not unique to CIP-014, and expects that the applicable Transmission Owners and Transmission Operators will develop memorandums of understanding, agreements, Coordinated Functional Registrations, or procedures, etc., to designate

responsibilities under CIP-014 when joint ownership is at issue, which is similar to what many entities have completed for other Reliability Standards.

The language contained in the applicability section regarding the collector bus is directly copied from CIP-002-5.1, Attachment 1, and has no additional meaning within the CIP-014 standard.

Timeline

(Added graphics) P-014-1 – Physical Security Process Flow

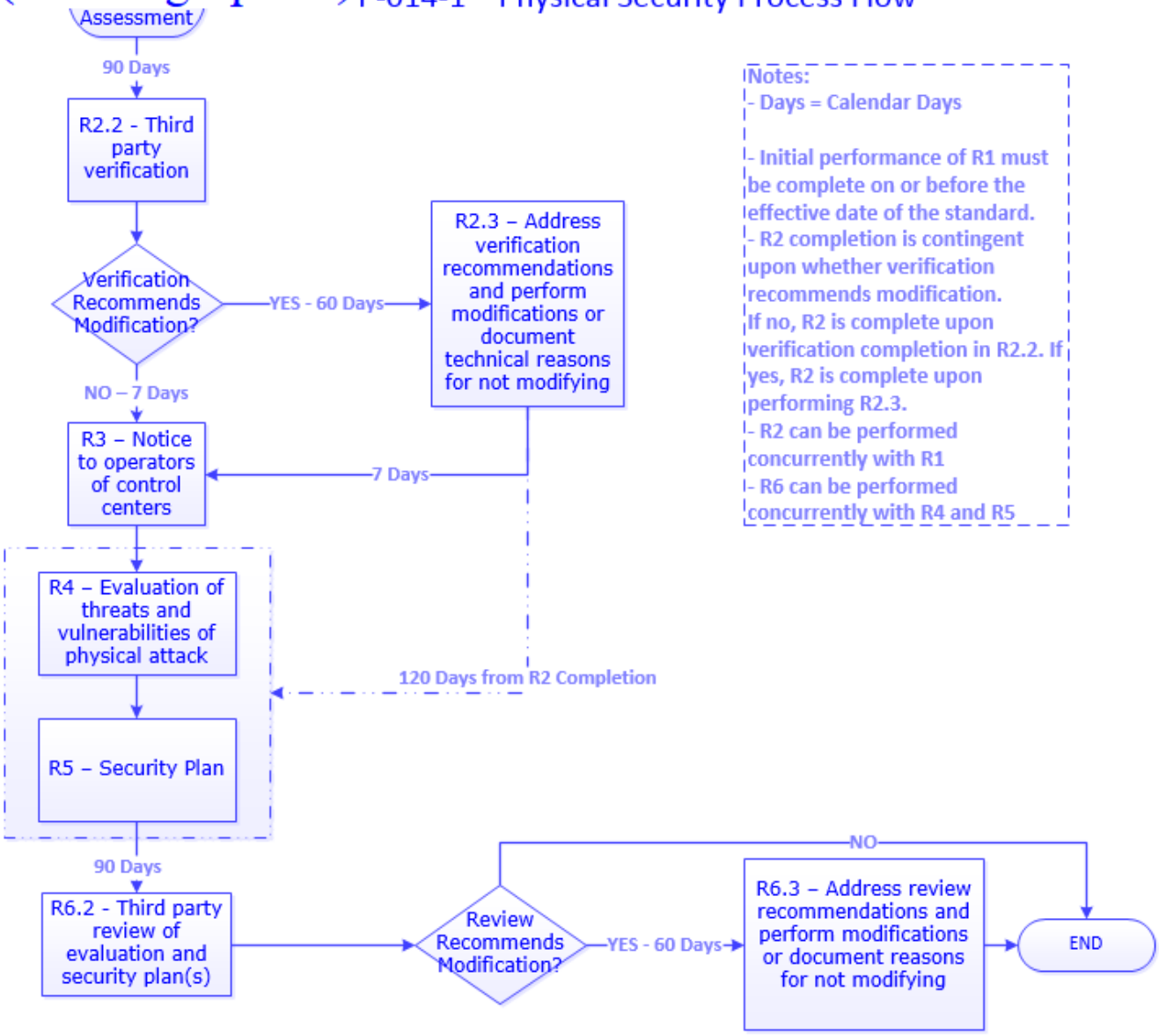

Rationale

During development of this standard, text boxes were embedded within the standard to explain the rationale for various parts of the standard. Upon BOT approval, the text from the rationale text boxes was moved to this section.

Rationale for Requirement R1 (This is for the old Requirement R1 in CIP-014-3):
This requirement meets the FERC directive from paragraph 6 of its March 7, 2014 order on physical security to perform a risk assessment to identify which facilities if rendered inoperable or damaged could impact an Interconnection through instability, uncontrolled separation, or cascading failures. The requirement is not intended to bring within the scope of the standard a Transmission station or Transmission substation unless the applicable Transmission Owner determines through technical studies and analyses based on objective analysis, technical expertise, operating experience and experienced judgment that the loss of such facility would have a critical impact on the operation of the Interconnection in the event the asset is rendered inoperable or damaged. In the November 20, 2014 Order, FERC reiterated that "only an instability that has a "critical impact on the operation of the interconnection" warrants finding that the facility causing the instability is critical under Requirement R1." The Transmission Owner may determine the criteria for critical impact by considering, among other criteria, any of the following:

- Criteria or methodology used by Transmission Planners or Planning Coordinators in TPL-001-4, Requirement R6
- NERC EOP-004-2 reporting criteria
- Area or magnitude of potential impact

Requirement R1 also meets the FERC directive for periodic reevaluation of the risk assessment by requiring the risk assessment to be performed every 30 months (or 60 months for an entity that has not identified in a previous risk assessment any Transmission stations or Transmission substations that if rendered inoperable or damaged could result in instability, uncontrolled separation, or Cascading within an Interconnection).

After identifying each Transmission station and Transmission substation that meets the criteria in Requirement R1, it is important to additionally identify the primary control center that operationally controls that Transmission station or Transmission substation (*i.e.,* the control center whose electronic actions can cause direct physical actions at the identified Transmission station and Transmission substation, such as opening a breaker, compared to a control center that only has the ability to monitor the Transmission station and Transmission substation and, therefore, must coordinate direct physical action through another entity).

Rationale for Requirement R2 (This is now Requirement R6 in CIP-014-4):
This requirement meets the FERC directive from paragraph 11 in the order on physical security requiring verification by an entity other than the owner or operator of the risk assessment performed under Requirement R1.

This requirement provides the flexibility for a Transmission Owner to select registered and non-registered entities with transmission planning or analysis experience to perform the verification of the Requirement R1 risk assessment. The term "unaffiliated" means that the selected verifying entity cannot be a corporate affiliate (*i.e.*, the verifying entity cannot be an entity that controls, is controlled by, or is under common control with, the Transmission owner). The verifying entity also cannot be a division of the Transmission Owner that operates as a functional unit. The term "unaffiliated" is not intended to prohibit a governmental entity from using another government entity to be a verifier under Requirement R2.

Requirement R2 also provides the Transmission Owner the flexibility to work with the verifying entity throughout the Requirement R1 risk assessment, which for some Transmission Owners may be more efficient and effective. In other words, a Transmission Owner could coordinate with their unaffiliated verifying entity to perform a Requirement R1 risk assessment to satisfy both Requirement R1 and Requirement R2 concurrently.

Planning Coordinator is a functional entity listed in Part 2.1. The Planning Coordinator and Planning Authority are the same entity as shown in the NERC Glossary of Terms Used in NERC Reliability Standards.

Rationale for Requirement R3 (This is now Requirement R7 in CIP-014-4):
Some Transmission Operators will have obligations under this standard for certain primary control centers. Those obligations, however, are contingent upon a Transmission Owner first identifying which Transmission stations and Transmission substations meet the criteria specified by Requirement R1, as verified according to Requirement R2. This requirement is intended to ensure that a Transmission Operator that has operational control of a primary control center identified in Requirement R1, Part 1.2 of a Transmission station or Transmission substation verified according to Requirement R2 receives notice of such identification so that the Transmission Operator may timely fulfill its resulting obligations under Requirements R4 through R6. Since the timing obligations in Requirements R4 through R6 are based upon completion of Requirement R2, the Transmission Owner must also include notice of the date of completion of Requirement R2. Similarly, the Transmission Owner must notify the Transmission Operator of any removals from identification that result from a subsequent risk assessment under Requirement R1 or the verification process under Requirement R2.

Rationale for Requirement R4 (This is now Requirement R8 in CIP-014-4):
This requirement meets the FERC directive from paragraph 8 in the order on physical security that the reliability standard must require tailored evaluation of potential threats and vulnerabilities to facilities identified in Requirement R1 and verified according to Requirement R2. Threats and vulnerabilities may vary from facility to facility based on factors such as the facility's location, size, function, existing protections, and attractiveness of the target. As such, the requirement does not mandate a one-size-fits-all approach but requires entities to account for the unique characteristics of their facilities.

Requirement R4 does not explicitly state when the evaluation of threats and vulnerabilities must occur or be completed. However, Requirement R5 requires that the entity's security plan(s), which is dependent on the Requirement R4 evaluation, must be completed within 120 calendar days following completion of Requirement R2. Thus, an entity has the flexibility when to complete the Requirement R4 evaluation,

provided that it is completed in time to comply with the requirement in Requirement R5 to develop a physical security plan 120 calendar days following completion of Requirement R2.

Rationale for Requirement R5 (This is now Requirement R9 in CIP-014-4):
This requirement meets the FERC directive from paragraph 9 in the order on physical security requiring the development and implementation of a security plan(s) designed to protect against attacks to the facilities identified in Requirement R1 based on the assessment performed under Requirement R4.

Rationale for Requirement R6 (This is now Requirement R10 in CIP-014-4):
This requirement meets the FERC directive from paragraph 11 in the order on physical security requiring review by an entity other than the owner or operator with appropriate expertise of the evaluation performed according to Requirement R4 and the security plan(s) developed according to Requirement R5.

As with the verification required by Requirement R2, Requirement R6 provides Transmission Owners and Transmission Operators the flexibility to work with the third party reviewer throughout the Requirement R4 evaluation and the development of the Requirement R5 security plan(s). This would allow entities to satisfy their obligations under Requirement R6 concurrent with the satisfaction of their obligations under Requirements R4 and R5.

NERC
NORTH AMERICAN ELECTRIC RELIABILITY CORPORATION

Standards Announcement

Project 2023-06 CIP-014 Risk Assessment Refinement

Formal Comment Period Open through July 21, 2025

Now Available

A 45-day formal comment period for draft three of **CIP-014-4 Physical Security** is open through **8 p.m. Eastern, Monday, July 21, 2025**.

The standard drafting team's considerations of the responses received from the previous comment period are reflected in this draft of the standard.

Reminder Regarding Corporate RBB Memberships

Under the NERC Rules of Procedure, each entity and its affiliates is collectively permitted one voting membership per Registered Ballot Body Segment. Each entity that undergoes a change in corporate structure (such as a merger or acquisition) that results in the entity or affiliated entities having more than the one permitted representative in a particular Segment must withdraw the duplicate membership(s) prior to joining new ballot pools or voting on anything as part of an existing ballot pool. Contact ballotadmin@nerc.net to assist with the removal of any duplicate registrations.

Commenting

Use the Standards Balloting and Commenting System (SBS) to submit comments. An unofficial Word version of the comment form is posted on the project page.

- *Contact NERC IT support directly at https://support.nerc.net/ (Monday – Friday, 8 a.m. - 5 p.m. Eastern) for problems regarding accessing the SBS due to a forgotten password, incorrect credential error messages, or system lock-out.*
- *Passwords expire every **6 months** and must be reset.*
- *The SBS **is not** supported for use on mobile devices.*
- *Please be mindful of ballot and comment period closing dates. We ask to **allow at least 48 hours** for NERC support staff to assist with inquiries. Therefore, it is recommended that users try logging into their SBS accounts **prior to the last day** of a comment/ballot period.*

Next Steps

Additional ballots for the standard and implementation plan, as well as a non-binding poll of the associated Violation Risk Factors and Violation Severity Levels, will be conducted **July 11 – July 21, 2025**.

For information on the Standards Development Process, refer to the Standard Processes Manual.

For more information or assistance, contact Senior Standards Developer, Ben Wu (via email) or at 470-542-6882. Subscribe to this project's observer mailing list by selecting "NERC Email Distribution Lists" from the "Service" drop-down menu and specify “Project 2023-06 CIP-014 Risk Assessment Refinement observer list” in the Description Box.



North American Electric Reliability Corporation
3353 Peachtree Rd, NE
Suite 600, North Tower
Atlanta, GA 30326
404-446-2560 | www.nerc.com

NERC
NORTH AMERICAN ELECTRIC RELIABILITY CORPORATION

Reminder
Standards Announcement
Project 2023-06 CIP-014 Risk Assessment Refinement

Additional Ballots and Non-binding Poll Open through July 21, 2025

Now Available

Additional ballots for **CIP-014-4 Physical Security**, its implementation plan, and non-binding poll of the associated Violation Risk Factors and Violation Severity Levels are open through **8 p.m. Eastern, Monday, July 21, 2025**.

The standard drafting team's considerations of the responses received from the last comment period are reflected in this draft of the standard.

Reminder Regarding Corporate RBB Memberships

Under the NERC Rules of Procedure, each entity and its affiliates is collectively permitted one voting membership per Registered Ballot Body Segment. Each entity that undergoes a change in corporate structure (such as a merger or acquisition) that results in the entity or affiliated entities having more than the one permitted representative in a particular Segment must withdraw the duplicate membership(s) prior to joining new ballot pools or voting on anything as part of an existing ballot pool. Contact ballotadmin@nerc.net to assist with the removal of any duplicate registrations.

Balloting

Members of the ballot pools associated with this project can log in and submit their votes by accessing the Standards Balloting and Commenting System (SBS) here.

Note: Votes cast in previous ballots, will not carry over to additional ballots. It is the responsibility of the registered voter in the ballot pools to place votes again. To ensure a quorum is reached, if you do not want to vote affirmative or negative, cast an abstention.

- *Contact NERC IT support directly at https://support.nerc.net/ (Monday – Friday, 8 a.m. - 5 p.m. Eastern) for problems regarding accessing the SBS due to a forgotten password, incorrect credential error messages, or system lock-out.*
- *Passwords expire every **6 months** and must be reset.*
- *The SBS **is not** supported for use on mobile devices.*
- *Please be mindful of ballot and comment period closing dates. We ask to **allow at least 48 hours** for NERC support staff to assist with inquiries. Therefore, it is recommended that users try logging into their SBS accounts **prior to the last day** of a comment/ballot period.*

Next Steps

The ballot results will be announced and posted on the project page. The drafting team will review all responses received during the comment period and determine the next steps of the project.

For information on the Standards Development Process, refer to the Standard Processes Manual.

For more information or assistance, contact Senior Standards Developer, Ben Wu (via email) or at 470-542-6882. Subscribe to this project's observer mailing list by selecting "NERC Email Distribution Lists" from the "Service" drop-down menu and specify “Project 2023-06 CIP-014 Risk Assessment Refinement observer list” in the Description Box.



North American Electric Reliability Corporation
3353 Peachtree Rd, NE
Suite 600, North Tower
Atlanta, GA 30326
404-446-2560 | www.nerc.com

BALLOT RESULTS

Comment: View Comment Results (/CommentResults/Index/363)
Ballot Name: Project 2023-06 CIP-014 Risk Assessment Refinement CIP-014-4 AB 3 ST
Voting Start Date: 7/11/2025 12:01:00 AM
Voting End Date: 7/21/2025 8:00:00 PM
Ballot Type: ST
Ballot Activity: AB
Ballot Series: 3
Total # Votes: 243
Total Ballot Pool: 293
Quorum: 82.94
Quorum Established Date: 7/21/2025 3:28:20 PM
Weighted Segment Value: 57.27

Segment	Ballot Pool	Segment Weight	Affirmative Votes	Affirmative Fraction	Negative Votes w/ Comment	Negative Fraction w/ Comment	Negative Votes w/o Comment	Abstain	No Vote
Segment: 1	85	1	28	0.467	32	0.533	0	11	14
Segment: 2	7	0.2	2	0.2	0	0	0	4	1
Segment: 3	67	1	27	0.563	21	0.438	0	8	11
Segment: 4	15	0.8	6	0.6	2	0.2	0	5	2
Segment: 5	66	1	18	0.45	22	0.55	0	10	16
Segment: 6	46	1	16	0.471	18	0.529	0	6	6
Segment: 7	0	0	0	0	0	0	0	0	0
Segment: 8	0	0	0	0	0	0	0	0	0

© 2026 - NERC Ver 4.2.1.0 Machine Name: ATLVPEROWEB01

Segment	Ballot Pool	Segment Weight	Affirmative Votes	Affirmative Fraction	Negative Votes w/ Comment	Negative Fraction w/ Comment	Negative Votes w/o Comment	Abstain	No Vote
Segment: 9	0	0	0	0	0	0	0	0	0
Segment: 10	7	0.5	4	0.4	1	0.1	0	2	0
Totals:	293	5.5	101	3.15	96	2.35	0	46	50

BALLOT POOL MEMBERS

Show All entries Search: Search

Segment	Organization	Voter	Designated Proxy	Ballot	NERC Memo
1	AEP - AEP Service Corporation	Dennis Sauriol		None	N/A
1	Allete - Minnesota Power, Inc.	Hillary Creurer		Negative	Comments Submitted
1	Ameren - Ameren Services	Tamara Evey		Affirmative	N/A
1	American Transmission Company, LLC	Amy Wilke		Affirmative	N/A
1	APS - Arizona Public Service Co.	Daniela Atanasovski		Negative	Comments Submitted
1	Arkansas Electric Cooperative Corporation	Lily Green		None	N/A
1	Associated Electric Cooperative, Inc.	Mark Riley		Affirmative	N/A
1	Austin Energy	Thomas Standifur		Affirmative	N/A

© 2026 - NERC Ver 4.2.1.0 Machine Name: ATLVPEROWEB01

Segment	Organization	Voter	Designated Proxy	Ballot	NERC Memo
1	Balancing Authority of Northern California	Kevin Smith	Tim Kelley	Affirmative	N/A
1	BC Hydro and Power Authority	Patricia Robertson		Abstain	N/A
1	Berkshire Hathaway Energy - MidAmerican Energy Co.	Thomas Breen		Affirmative	N/A
1	Black Hills Corporation	Trevor Rombough		Negative	Comments Submitted
1	Bonneville Power Administration	Kamala Rogers-Holliday		Negative	Comments Submitted
1	CenterPoint Energy Houston Electric, LLC	Daniela Hammons		Negative	Comments Submitted
1	Central Iowa Power Cooperative	Kevin Lyons		None	N/A
1	City Utilities of Springfield, Missouri	Michael Buyce		None	N/A
1	Colorado Springs Utilities	Corey Walker		Affirmative	N/A
1	Con Ed - Consolidated Edison Co. of New York	Dermot Smyth		Negative	Comments Submitted
1	Dairyland Power Cooperative	Karrie Schuldt		Abstain	N/A
1	Dominion - Dominion Virginia Power	Steven Belle		Negative	Comments Submitted
1	Duke Energy	Katherine Street		Affirmative	N/A
1	Edison International - Southern California Edison Company	Robert Blackney		Negative	Comments Submitted
1	Entergy	Brian Lindsey		Affirmative	N/A
1	Evergy	Kevin Frick	Alan Kloster	Negative	Comments Submitted
1	Eversource Energy	Joshua London		Affirmative	N/A
1	Exelon	Daniel Gacek		Affirmative	N/A

© 2026 - NERC Ver 4.2.1.0 Machine Name: ATLVPEROWEB01

Segment	Organization	Voter	Designated Proxy	Ballot	NERC Memo
1	FirstEnergy - FirstEnergy Corporation	Theresa Ciancio		Negative	Comments Submitted
1	Georgia Transmission Corporation	Greg Davis	Stephen Stafford	Negative	Comments Submitted
1	Glencoe Light and Power Commission	Terry Volkmann		Negative	Third-Party Comments
1	Great River Energy	Gordon Pietsch		None	N/A
1	Hydro One Networks, Inc.	Emma Halilovic		Negative	Comments Submitted
1	Hydro-Quebec (HQ)	Nicolas Turcotte	Chantal Mazza	Negative	Comments Submitted
1	IDACORP - Idaho Power Company	Sean Steffensen		Affirmative	N/A
1	Imperial Irrigation District	Jesus Sammy Alcaraz	Denise Sanchez	Affirmative	N/A
1	International Transmission Company Holdings Corporation	Michael Moltane	Gail Elliott	Negative	Comments Submitted
1	Lakeland Electric	Larry Watt		None	N/A
1	Lincoln Electric System	Josh Johnson		Affirmative	N/A
1	Long Island Power Authority	Isidoro Behar		Negative	Comments Submitted
1	Los Angeles Department of Water and Power	Jonathon Flores		Affirmative	N/A
1	Lower Colorado River Authority	Matt Lewis		None	N/A
1	M and A Electric Power Cooperative	William Price		Affirmative	N/A
1	Manitoba Hydro	Nazra Gladu		Negative	Comments Submitted
1	Minnkota Power Cooperative Inc.	Theresa Allard	Nikki Carson-Marquis	Negative	Comments Submitted
1	Muscatine Power and Water	Andrew Kurriger		Abstain	N/A

© 2026 - NERC Ver 4.2.1.0 Machine Name: ATLVPEROWEB01

Segment	Organization	Voter	Designated Proxy	Ballot	NERC Memo
1	N.W. Electric Power Cooperative, Inc.	Mark Ramsey		Affirmative	N/A
1	National Grid USA	Jacqueline Ryan		Abstain	N/A
1	NB Power Corporation	Jeffrey Streifling		Negative	Comments Submitted
1	Nebraska Public Power District	Jamison Cawley		Negative	Comments Submitted
1	Network and Security Technologies	Nick Lauriat		Abstain	N/A
1	New York Power Authority	Daniel Valle		Affirmative	N/A
1	NextEra Energy - Florida Power and Light Co.	Silvia Mitchell		Negative	Comments Submitted
1	NiSource - Northern Indiana Public Service Co.	Alison Nickells		Affirmative	N/A
1	Northeast Missouri Electric Power Cooperative	Brett Douglas		Affirmative	N/A
1	OGE Energy - Oklahoma Gas and Electric Co.	Terri Pyle		Affirmative	N/A
1	Oncor Electric Delivery	Byron Booker	Lucinda Bradshaw	None	N/A
1	OTP - Otter Tail Power Company	Charles Wicklund		None	N/A
1	Pacific Gas and Electric Company	Marco Rios	Bob Cardle	Negative	Comments Submitted
1	Pedernales Electric Cooperative, Inc.	Bradley Collard		None	N/A
1	Platte River Power Authority	Marissa Archie		Affirmative	N/A
1	Portland General Electric Co.	Brooke Jockin		Abstain	N/A
1	PPL Electric Utilities Corporation	Michelle McCartney Lenoge		Negative	Third-Party Comments

Segment	Organization	Voter	Designated Proxy	Ballot	NERC Memo
1	PSEG - Public Service Electric and Gas Co.	Karen Arnold		None	N/A
1	Public Utility District No. 1 of Chelan County	Robert Witham		Negative	Comments Submitted
1	Public Utility District No. 1 of Snohomish County	Alyssia Rhoads		Affirmative	N/A
1	Public Utility District No. 2 of Grant County, Washington	Joanne Anderson		Abstain	N/A
1	Sacramento Municipal Utility District	Wei Shao	Tim Kelley	Affirmative	N/A
1	Salt River Project	Laura Somak	Timothy Singh	Negative	Comments Submitted
1	Santee Cooper	Chris Wagner		Negative	Comments Submitted
1	SaskPower	Wayne Guttormson		Abstain	N/A
1	Seattle City Light	Michael Jang		Affirmative	N/A
1	Seminole Electric Cooperative, Inc.	Khang Le		Negative	Comments Submitted
1	Sempra - San Diego Gas and Electric	Mo Derbas		Negative	Third-Party Comments
1	Sho-Me Power Electric Cooperative	Oskar Olson		None	N/A
1	Southern Company - Southern Company Services, Inc.	Matt Carden		None	N/A
1	Southwestern Power Administration	Angela Wheat		Abstain	N/A
1	Sunflower Electric Power Corporation	Paul Mehlhaff		Abstain	N/A
1	Tacoma Public Utilities (Tacoma, WA)	John Merrell	Jennie Wike	Affirmative	N/A

© 2026 - NERC Ver 4.2.1.0 Machine Name: ATLVPEROWEB01

Segment	Organization	Voter	Designated Proxy	Ballot	NERC Memo
1	Tallahassee Electric (City of Tallahassee, FL)	Scott Langston		None	N/A
1	Tennessee Valley Authority	David Plumb		Negative	Comments Submitted
1	Tri-State G and T Association, Inc.	Donna Wood		Affirmative	N/A
1	U.S. Bureau of Reclamation	Richard Jackson		Affirmative	N/A
1	Unisource - Tucson Electric Power Co.	Jessica Cordero		Negative	Comments Submitted
1	VELCO -Vermont Electric Power Company, Inc.	Randall Buswell		Abstain	N/A
1	Western Area Power Administration	Ben Hammer		Negative	Comments Submitted
1	Xcel Energy, Inc.	Eric Barry		Negative	Third-Party Comments
2	California ISO	Darcy O'Connell		Affirmative	N/A
2	Electric Reliability Council of Texas, Inc.	Kennedy Meier		Abstain	N/A
2	ISO New England, Inc.	John Pearson		Affirmative	N/A
2	Midcontinent ISO, Inc.	Kirsten Rowley		Abstain	N/A
2	New York Independent System Operator	Gregory Campoli		None	N/A
2	PJM Interconnection, L.L.C.	Thomas Foster	Elizabeth Davis	Abstain	N/A
2	Southwest Power Pool, Inc. (RTO)	Joshua Phillips		Abstain	N/A
3	AEP	Jodi Yeary		Negative	Comments Submitted
3	Ameren - Ameren Services	David Jendras Sr	Nick Leathers	Affirmative	N/A
3	APS - Arizona Public Service Co.	Jessica Lopez		Negative	Comments Submitted

© 2026 - NERC Ver 4.2.1.0 Machine Name: ATLVPEROWEB01

Segment	Organization	Voter	Designated Proxy	Ballot	NERC Memo
3	Arkansas Electric Cooperative Corporation	Ayslynn Mcavoy		Abstain	N/A
3	Associated Electric Cooperative, Inc.	Todd Bennett		Affirmative	N/A
3	Austin Energy	Lovita Griffin		None	N/A
3	Avista - Avista Corporation	Robert Follini		Affirmative	N/A
3	BC Hydro and Power Authority	Ming Jiang		Abstain	N/A
3	Berkshire Hathaway Energy - MidAmerican Energy Co.	Amy Key		Affirmative	N/A
3	Black Hills Corporation	Josh Combs		Negative	Comments Submitted
3	Bonneville Power Administration	Ron Sporseen		Negative	Comments Submitted
3	Buckeye Power, Inc.	Tom Schmidt	Ryan Strom	Affirmative	N/A
3	Central Electric Power Cooperative (Missouri)	Adam Weber		Affirmative	N/A
3	City Utilities of Springfield, Missouri	Jessica Morrissey		Abstain	N/A
3	Colorado Springs Utilities	Hillary Dobson		Affirmative	N/A
3	Con Ed - Consolidated Edison Co. of New York	Lincoln Burton		Negative	Comments Submitted
3	Dominion - Dominion Virginia Power	Victoria Crider		Negative	Comments Submitted
3	Duke Energy - Florida Power Corporation	Marcelo Pesantez		None	N/A
3	Edison International - Southern California Edison Company	Romel Aquino		None	N/A
3	Entergy	James Keele		Affirmative	N/A
3	Evergy	Marcus Moor	Alan Kloster	Negative	Comments Submitted

© 2026 - NERC Ver 4.2.1.0 Machine Name: ATLVPEROWEB01

Segment	Organization	Voter	Designated Proxy	Ballot	NERC Memo
3	Eversource Energy	Vicki O'Leary		Affirmative	N/A
3	Exelon	Kinte Whitehead		Affirmative	N/A
3	FirstEnergy - FirstEnergy Corporation	Aaron Ghodooshim		Negative	Comments Submitted
3	Georgia System Operations Corporation	Scott McGough		None	N/A
3	Great River Energy	Michael Brytowski		Affirmative	N/A
3	Imperial Irrigation District	George Kirschner	Denise Sanchez	Affirmative	N/A
3	KAMO Electric Cooperative	Tony Gott		Affirmative	N/A
3	Lincoln Electric System	Sam Christensen		Affirmative	N/A
3	Los Angeles Department of Water and Power	Fausto Serratos		Affirmative	N/A
3	M and A Electric Power Cooperative	Gary Dollins		Affirmative	N/A
3	MEAG Power	Roger Brand	Rebika Yitna	Negative	Comments Submitted
3	MGE Energy - Madison Gas and Electric Co.	Benjamin Widder		Abstain	N/A
3	Muscatine Power and Water	Seth Shoemaker		Abstain	N/A
3	National Grid USA	Brian Shanahan		Abstain	N/A
3	Nebraska Public Power District	Tony Eddleman		Negative	Comments Submitted
3	New York Power Authority	Richard Machado		Negative	Comments Submitted
3	NextEra Energy - Florida Power and Light Co.	Karen Demos		Negative	Comments Submitted
3	NiSource - Northern Indiana Public Service Co.	Steven Taddeucci		Affirmative	N/A

© 2026 - NERC Ver 4.2.1.0 Machine Name: ATLVPEROWEB01

Segment	Organization	Voter	Designated Proxy	Ballot	NERC Memo
3	Northeast Missouri Electric Power Cooperative	Skyler Wiegmann		None	N/A
3	Northern California Power Agency	Michael Whitney	Chris Carnesi	None	N/A
3	NW Electric Power Cooperative, Inc.	Heath Henry		Affirmative	N/A
3	OGE Energy - Oklahoma Gas and Electric Co.	Donald Hargrove		Affirmative	N/A
3	Omaha Public Power District	David Heins		Affirmative	N/A
3	Orlando Utilities Commission	Ballard Mutters		None	N/A
3	OTP - Otter Tail Power Company	Tony Huseby		None	N/A
3	Pacific Gas and Electric Company	Sandra Ellis	Bob Cardle	Negative	Comments Submitted
3	Platte River Power Authority	Richard Kiess		Affirmative	N/A
3	Portland General Electric Co.	Mayra Franco		Abstain	N/A
3	PPL - Louisville Gas and Electric Co.	James Frank		Negative	Third-Party Comments
3	PSEG - Public Service Electric and Gas Co.	Christopher Murphy		None	N/A
3	Public Utility District No. 1 of Chelan County	Joyce Gundry		Negative	Comments Submitted
3	Puget Sound Energy, Inc.	Kelley Sargent		Negative	Comments Submitted
3	Sacramento Municipal Utility District	Nicole Looney	Tim Kelley	Affirmative	N/A
3	Salt River Project	Mathew Weber	Timothy Singh	Negative	Comments Submitted
3	Santee Cooper	Vicky Budreau		Negative	Comments Submitted

© 2026 - NERC Ver 4.2.1.0 Machine Name: ATLVPEROWEB01

Segment	Organization	Voter	Designated Proxy	Ballot	NERC Memo
3	Seattle City Light	Zenon O'young-Chu		Affirmative	N/A
3	Seminole Electric Cooperative, Inc.	Usama Tahir		Negative	Comments Submitted
3	Sempra - San Diego Gas and Electric	Bryan Bennett		Negative	Third-Party Comments
3	Sho-Me Power Electric Cooperative	Jarrod Murdaugh		Affirmative	N/A
3	Snohomish County PUD No. 1	Holly Chaney		Affirmative	N/A
3	Southern Company - Alabama Power Company	Joel Dembowski		None	N/A
3	Southern Indiana Gas and Electric Co.	Ryan Snyder		Abstain	N/A
3	Tennessee Valley Authority	Ian Grant		None	N/A
3	Tri-State G and T Association, Inc.	Amanda Skubal		Affirmative	N/A
3	TXNM Energy	Scott Thompson		Affirmative	N/A
3	Xcel Energy, Inc.	Nicholas Friebel		Negative	Third-Party Comments
4	Alliant Energy Corporation Services, Inc.	Angela Dockter	Lexi Dobrzysnki	Abstain	N/A
4	Arkansas Electric Cooperative Corporation	Jenni Sudduth		Abstain	N/A
4	Buckeye Power, Inc.	Jason Procuniar	Ryan Strom	Affirmative	N/A
4	City Utilities of Springfield, Missouri	Jerry Bradshaw		Affirmative	N/A
4	FirstEnergy - FirstEnergy Corporation	Mark Garza		Negative	Comments Submitted
4	Georgia System Operations Corporation	Katrina Lyons		Negative	Third-Party Comments
4	Northern California Power Agency	Marty Hostler		None	N/A

© 2026 - NERC Ver 4.2.1.0 Machine Name: ATLVPEROWEB01

Segment	Organization	Voter	Designated Proxy	Ballot	NERC Memo
4	Oklahoma Municipal Power Authority	Michael Watt		None	N/A
4	Public Utility District No. 1 of Snohomish County	John D. Martinsen		Affirmative	N/A
4	Public Utility District No. 2 of Grant County, Washington	Karla Weaver		Abstain	N/A
4	Sacramento Municipal Utility District	Foung Mua	Tim Kelley	Affirmative	N/A
4	Seattle City Light	Robert Jones		Affirmative	N/A
4	Utility Services, Inc.	Carver Powers		Affirmative	N/A
4	WEC Energy Group, Inc.	Candace Morakinyo		Abstain	N/A
4	Western Power Pool	Kevin Conway		Abstain	N/A
5	AEP	Thomas Foltz		Negative	Comments Submitted
5	Ameren - Ameren Missouri	Sam Dwyer		Affirmative	N/A
5	APS - Arizona Public Service Co.	Andrew Smith		Negative	Comments Submitted
5	Associated Electric Cooperative, Inc.	Chuck Booth		Affirmative	N/A
5	Austin Energy	Michael Dillard		Affirmative	N/A
5	Avista - Avista Corporation	Glen Farmer		None	N/A
5	BC Hydro and Power Authority	Vijay Raghunathan		Abstain	N/A
5	Berkshire Hathaway - NV Energy	Dwanique Spiller		None	N/A
5	Black Hills Corporation	Sheila Suurmeier		Negative	Comments Submitted
5	Buckeye Power, Inc.	Kevin Zemanek	Ryan Strom	Affirmative	N/A
5	California Department of Water Resources	ASM Mostafa		None	N/A

© 2026 - NERC Ver 4.2.1.0 Machine Name: ATLVPEROWEB01

Segment	Organization	Voter	Designated Proxy	Ballot	NERC Memo
5	CMS Energy - Consumers Energy Company	David Greyerbiehl		Abstain	N/A
5	Colorado Springs Utilities	Jeffrey Icke		Affirmative	N/A
5	Con Ed - Consolidated Edison Co. of New York	Michelle Pagano		Negative	Comments Submitted
5	Constellation	Alison MacKellar		Abstain	N/A
5	Cowlitz County PUD	Deanna Carlson		None	N/A
5	Dairyland Power Cooperative	Tommy Drea		Abstain	N/A
5	Dominion - Dominion Resources, Inc.	Barbara Marion		Negative	Comments Submitted
5	DTE Energy	George Goddard		None	N/A
5	Duke Energy	Dale Goodwine		Affirmative	N/A
5	Edison International - Southern California Edison Company	Selene Willis		Negative	Comments Submitted
5	Electric Power Supply Association	Bill Zuretti		None	N/A
5	Entergy - Entergy Services, Inc.	Gail Golden		Affirmative	N/A
5	Evergy	Jeremy Harris	Alan Kloster	Negative	Comments Submitted
5	FirstEnergy - FirstEnergy Corporation	Matthew Augustin		Negative	Comments Submitted
5	Great River Energy	Jacalynn Bentz		Affirmative	N/A
5	Greybeard Compliance Services, LLC	Mike Gabriel		None	N/A
5	Hydro-Quebec (HQ)	Junji Yamaguchi	Chantal Mazza	Negative	Comments Submitted
5	Imperial Irrigation District	Tino Zaragoza	Denise Sanchez	Affirmative	N/A
5	JEA	John Babik		None	N/A

© 2026 - NERC Ver 4.2.1.0 Machine Name: ATLVPEROWEB01

Segment	Organization	Voter	Designated Proxy	Ballot	NERC Memo
5	Lincoln Electric System	Brittany Millard		Affirmative	N/A
5	Los Angeles Department of Water and Power	Robert Kerrigan		Affirmative	N/A
5	Lower Colorado River Authority	Joseph Scott		Negative	Comments Submitted
5	National Grid USA	Robin Berry		Abstain	N/A
5	NB Power Corporation - New Brunswick Power Transmission Corporation	David Melanson		Negative	Comments Submitted
5	Nebraska Public Power District	Ronald Bender		Negative	Third-Party Comments
5	New York Power Authority	Zahid Qayyum		Negative	Comments Submitted
5	NextEra Energy	Richard Vendetti		Negative	Comments Submitted
5	NiSource - Northern Indiana Public Service Co.	Kathryn Tackett		Affirmative	N/A
5	Northern California Power Agency	Jeremy Lawson	Chris Carnesi	None	N/A
5	NRG - NRG Energy, Inc.	Michael Scalise		None	N/A
5	OGE Energy - Oklahoma Gas and Electric Co.	Patrick Wells		Affirmative	N/A
5	Oglethorpe Power Corporation	Donna Johnson		Abstain	N/A
5	Oklahoma Municipal Power Authority	Patrick Tuttle		Abstain	N/A
5	Omaha Public Power District	Kayleigh Wilkerson		Affirmative	N/A
5	OTP - Otter Tail Power Company	Stacy Wahlund		None	N/A
5	Pacific Gas and Electric Company	Tyler Brun	Bob Cardle	Negative	Comments Submitted
5	Platte River Power Authority	Jon Osell		None	N/A

© 2026 - NERC Ver 4.2.1.0 Machine Name: ATLVPEROWEB01

Segment	Organization	Voter	Designated Proxy	Ballot	NERC Memo
5	Portland General Electric Co.	Ryan Olson		Abstain	N/A
5	PPL - Louisville Gas and Electric Co.	Julie Hostrander		None	N/A
5	PSEG Nuclear LLC	Sharon Brown		Abstain	N/A
5	Public Utility District No. 1 of Chelan County	Rebecca Wickel		Negative	Comments Submitted
5	Public Utility District No. 1 of Snohomish County	Becky Burden		Affirmative	N/A
5	Sacramento Municipal Utility District	Ryder Couch	Tim Kelley	Affirmative	N/A
5	Salt River Project	Matthew Jaramilla	Timothy Singh	Negative	Comments Submitted
5	Santee Cooper	Carey Salisbury		Negative	Comments Submitted
5	Seattle City Light	Chris Shultz		None	N/A
5	Seminole Electric Cooperative, Inc.	Melanie Wong		Negative	Comments Submitted
5	Sempra - San Diego Gas and Electric	Jennifer Wright		Negative	Third-Party Comments
5	Southern Company - Southern Company Generation	Leslie Burke		None	N/A
5	Southern Indiana Gas and Electric Co.	Larry Rogers		Abstain	N/A
5	Talen Generation, LLC	Donald Lock		None	N/A
5	Tennessee Valley Authority	Darren Boehm		Negative	Comments Submitted
5	Tri-State G and T Association, Inc.	Sergio Banuelos		Affirmative	N/A
5	U.S. Bureau of Reclamation	Wendy Kalidass		Affirmative	N/A
5	Xcel Energy, Inc.	Gerry Huitt		Negative	Third-Party Comments

© 2026 - NERC Ver 4.2.1.0 Machine Name: ATLVPEROWEB01

Segment	Organization	Voter	Designated Proxy	Ballot	NERC Memo
6	AEP	Randy Calhoun		None	N/A
6	Ameren - Ameren Services	Robert Quinlivan		Affirmative	N/A
6	APS - Arizona Public Service Co.	Marcus Bortman	Brandon Smith	Negative	Comments Submitted
6	Arkansas Electric Cooperative Corporation	Bruce Walkup		Abstain	N/A
6	Associated Electric Cooperative, Inc.	Brian Ackermann		Affirmative	N/A
6	Austin Energy	Imane Mrini		Affirmative	N/A
6	Berkshire Hathaway - PacifiCorp	Lindsay Wickizer		Affirmative	N/A
6	Black Hills Corporation	Josh Schumacher		Negative	Comments Submitted
6	Bonneville Power Administration	Tanner Brier		Negative	Comments Submitted
6	Cleco Corporation	Robert Hirchak	Clay Walker	None	N/A
6	Con Ed - Consolidated Edison Co. of New York	Jason Chandler		Negative	Comments Submitted
6	Constellation	Kimberly Turco		Abstain	N/A
6	Dominion - Dominion Resources, Inc.	Bill Garvey		Negative	Comments Submitted
6	Duke Energy	John Sturgeon		Affirmative	N/A
6	Edison International - Southern California Edison Company	Stephanie Kenny		Negative	Comments Submitted
6	Entergy	Julie Hall		None	N/A
6	Evergy	Tiffany Lake	Alan Kloster	Negative	Comments Submitted
6	FirstEnergy - FirstEnergy Corporation	Stacey Sheehan		Negative	Comments Submitted
6	Great River Energy	Brian Meloy		Affirmative	N/A

© 2026 - NERC Ver 4.2.1.0 Machine Name: ATLVPEROWEB01

Segment	Organization	Voter	Designated Proxy	Ballot	NERC Memo
6	Imperial Irrigation District	Diana Torres	Denise Sanchez	Affirmative	N/A
6	Lincoln Electric System	Eric Ruskamp		Affirmative	N/A
6	Los Angeles Department of Water and Power	Anton Vu		Affirmative	N/A
6	Muscatine Power and Water	Nicholas Burns		Abstain	N/A
6	New York Power Authority	Shelly Dineen		Negative	Comments Submitted
6	NextEra Energy - Florida Power and Light Co.	Justin Welty		Negative	Comments Submitted
6	NiSource - Northern Indiana Public Service Co.	Eugene Johnson		Affirmative	N/A
6	Northern California Power Agency	Dennis Sismaet	Chris Carnesi	None	N/A
6	OGE Energy - Oklahoma Gas and Electric Co.	Ashley F Stringer		Affirmative	N/A
6	Omaha Public Power District	Shonda Markus		Affirmative	N/A
6	Platte River Power Authority	Sabrina Martz		Affirmative	N/A
6	Portland General Electric Co.	Stefanie Burke		Abstain	N/A
6	Powerex Corporation	Raj Hundal		Abstain	N/A
6	PPL - Louisville Gas and Electric Co.	Linn Oelker		Negative	Third-Party Comments
6	PSEG - PSEG Energy Resources and Trade LLC	Laura Wu		None	N/A
6	Public Utility District No. 1 of Chelan County	Tamarra Hardie		Negative	Comments Submitted
6	Sacramento Municipal Utility District	Charles Norton	Tim Kelley	Affirmative	N/A
6	Salt River Project	Israel Perez	Timothy Singh	Negative	Comments Submitted

© 2026 - NERC Ver 4.2.1.0 Machine Name: ATLVPEROWEB01

Segment	Organization	Voter	Designated Proxy	Ballot	NERC Memo
6	Santee Cooper	Marty Watson		Negative	Comments Submitted
6	Seattle City Light	Daren Brubaker		Affirmative	N/A
6	Seminole Electric Cooperative, Inc.	Bret Galbraith		Negative	Comments Submitted
6	Snohomish County PUD No. 1	John Liang		Affirmative	N/A
6	Southern Company - Southern Company Generation and Energy Marketing	Matthew O'neal		None	N/A
6	Southern Indiana Gas and Electric Co.	Kati Barr		Abstain	N/A
6	Tennessee Valley Authority	Jeffrey Powell		Negative	Comments Submitted
6	Western Area Power Administration	Jennifer Neville		Negative	Comments Submitted
6	Xcel Energy, Inc.	Patrick Flaherty		Negative	Third-Party Comments
10	Midwest Reliability Organization	Mark Flanary		Affirmative	N/A
10	New York State Reliability Council	Wesley Yeomans		Affirmative	N/A
10	Northeast Power Coordinating Council	Ruida Shu		Abstain	N/A
10	ReliabilityFirst	Tremayne Brown	Greg Sorenson	Negative	Comments Submitted
10	SERC Reliability Corporation	Dave Krueger		Abstain	N/A
10	Texas Reliability Entity, Inc.	Rachel Coyne		Affirmative	N/A
10	Western Electricity Coordinating Council	Steven Rueckert		Affirmative	N/A

© 2026 - NERC Ver 4.2.1.0 Machine Name: ATLVPEROWEB01

Showing 1 to 293 of 293 entries

Previous 1 Next

© 2026 - NERC Ver 4.2.1.0 Machine Name: ATLVPEROWEB01

BALLOT RESULTS

Comment: View Comment Results (/CommentResults/Index/363)
Ballot Name: Project 2023-06 CIP-014 Risk Assessment Refinement Implementation Plan AB 3 OT
Voting Start Date: 7/11/2025 12:01:00 AM
Voting End Date: 7/21/2025 8:00:00 PM
Ballot Type: OT
Ballot Activity: AB
Ballot Series: 3
Total # Votes: 239
Total Ballot Pool: 287
Quorum: 83.28
Quorum Established Date: 7/21/2025 3:28:30 PM
Weighted Segment Value: 69.66

Segment	Ballot Pool	Segment Weight	Affirmative Votes	Affirmative Fraction	Negative Votes w/ Comment	Negative Fraction w/ Comment	Negative Votes w/o Comment	Abstain	No Vote
Segment: 1	84	1	37	0.649	20	0.351	0	13	14
Segment: 2	7	0.2	2	0.2	0	0	0	4	1
Segment: 3	66	1	32	0.696	14	0.304	1	8	11
Segment: 4	14	0.6	4	0.4	2	0.2	1	5	2
Segment: 5	64	1	25	0.641	14	0.359	1	10	14
Segment: 6	45	1	21	0.636	12	0.364	0	6	6
Segment: 7	0	0	0	0	0	0	0	0	0
Segment: 8	0	0	0	0	0	0	0	0	0

© 2026 - NERC Ver 4.2.1.0 Machine Name: ATLVPEROWEB01

Segment	Ballot Pool	Segment Weight	Affirmative Votes	Affirmative Fraction	Negative Votes w/ Comment	Negative Fraction w/ Comment	Negative Votes w/o Comment	Abstain	No Vote
Segment: 9	0	0	0	0	0	0	0	0	0
Segment: 10	7	0.4	4	0.4	0	0	0	3	0
Totals:	287	5.2	125	3.622	62	1.578	3	49	48

BALLOT POOL MEMBERS

Show All entries Search: Search

Segment	Organization	Voter	Designated Proxy	Ballot	NERC Memo
1	AEP - AEP Service Corporation	Dennis Sauriol		None	N/A
1	Allete - Minnesota Power, Inc.	Hillary Creurer		Affirmative	N/A
1	Ameren - Ameren Services	Tamara Evey		Affirmative	N/A
1	American Transmission Company, LLC	Amy Wilke		Affirmative	N/A
1	APS - Arizona Public Service Co.	Daniela Atanasovski		Affirmative	N/A
1	Arkansas Electric Cooperative Corporation	Lily Green		None	N/A
1	Associated Electric Cooperative, Inc.	Mark Riley		Affirmative	N/A
1	Austin Energy	Thomas Standifur		Affirmative	N/A

© 2026 - NERC Ver 4.2.1.0 Machine Name: ATLVPEROWEB01

Segment	Organization	Voter	Designated Proxy	Ballot	NERC Memo
1	Balancing Authority of Northern California	Kevin Smith	Tim Kelley	Affirmative	N/A
1	BC Hydro and Power Authority	Patricia Robertson		Abstain	N/A
1	Berkshire Hathaway Energy - MidAmerican Energy Co.	Thomas Breen		Affirmative	N/A
1	Black Hills Corporation	Trevor Rombough		Affirmative	N/A
1	Bonneville Power Administration	Kamala Rogers-Holliday		Negative	Comments Submitted
1	CenterPoint Energy Houston Electric, LLC	Daniela Hammons		Abstain	N/A
1	Central Iowa Power Cooperative	Kevin Lyons		None	N/A
1	City Utilities of Springfield, Missouri	Michael Buyce		None	N/A
1	Colorado Springs Utilities	Corey Walker		Affirmative	N/A
1	Con Ed - Consolidated Edison Co. of New York	Dermot Smyth		Negative	Comments Submitted
1	Dairyland Power Cooperative	Karrie Schuldt		Abstain	N/A
1	Dominion - Dominion Virginia Power	Steven Belle		Affirmative	N/A
1	Duke Energy	Katherine Street		Affirmative	N/A
1	Edison International - Southern California Edison Company	Robert Blackney		Affirmative	N/A
1	Entergy	Brian Lindsey		Affirmative	N/A
1	Evergy	Kevin Frick	Alan Kloster	Negative	Comments Submitted
1	Eversource Energy	Joshua London		Affirmative	N/A
1	Exelon	Daniel Gacek		Affirmative	N/A

© 2026 - NERC Ver 4.2.1.0 Machine Name: ATLVPEROWEB01

Segment	Organization	Voter	Designated Proxy	Ballot	NERC Memo
1	FirstEnergy - FirstEnergy Corporation	Theresa Ciancio		Negative	Comments Submitted
1	Georgia Transmission Corporation	Greg Davis	Stephen Stafford	Negative	Comments Submitted
1	Glencoe Light and Power Commission	Terry Volkmann		Negative	Third-Party Comments
1	Great River Energy	Gordon Pietsch		None	N/A
1	Hydro One Networks, Inc.	Emma Halilovic		Abstain	N/A
1	Hydro-Quebec (HQ)	Nicolas Turcotte	Chantal Mazza	Affirmative	N/A
1	IDACORP - Idaho Power Company	Sean Steffensen		Affirmative	N/A
1	Imperial Irrigation District	Jesus Sammy Alcaraz	Denise Sanchez	Affirmative	N/A
1	International Transmission Company Holdings Corporation	Michael Moltane	Gail Elliott	Negative	Comments Submitted
1	Lakeland Electric	Larry Watt		None	N/A
1	Lincoln Electric System	Josh Johnson		Affirmative	N/A
1	Long Island Power Authority	Isidoro Behar		Negative	Comments Submitted
1	Los Angeles Department of Water and Power	Jonathon Flores		Affirmative	N/A
1	Lower Colorado River Authority	Matt Lewis		None	N/A
1	M and A Electric Power Cooperative	William Price		Affirmative	N/A
1	Manitoba Hydro	Nazra Gladu		Negative	Comments Submitted
1	Minnkota Power Cooperative Inc.	Theresa Allard	Nikki Carson-Marquis	Negative	Comments Submitted
1	Muscatine Power and Water	Andrew Kurriger		Abstain	N/A

© 2026 - NERC Ver 4.2.1.0 Machine Name: ATLVPEROWEB01

Segment	Organization	Voter	Designated Proxy	Ballot	NERC Memo
1	N.W. Electric Power Cooperative, Inc.	Mark Ramsey		Affirmative	N/A
1	National Grid USA	Jacqueline Ryan		Abstain	N/A
1	NB Power Corporation	Jeffrey Streifling		Negative	Comments Submitted
1	Nebraska Public Power District	Jamison Cawley		Negative	Comments Submitted
1	Network and Security Technologies	Nick Lauriat		Abstain	N/A
1	New York Power Authority	Daniel Valle		Affirmative	N/A
1	NextEra Energy - Florida Power and Light Co.	Silvia Mitchell		Affirmative	N/A
1	NiSource - Northern Indiana Public Service Co.	Alison Nickells		Affirmative	N/A
1	Northeast Missouri Electric Power Cooperative	Brett Douglas		Affirmative	N/A
1	OGE Energy - Oklahoma Gas and Electric Co.	Terri Pyle		Affirmative	N/A
1	Oncor Electric Delivery	Byron Booker	Lucinda Bradshaw	None	N/A
1	OTP - Otter Tail Power Company	Charles Wicklund		None	N/A
1	Pacific Gas and Electric Company	Marco Rios	Bob Cardle	Affirmative	N/A
1	Pedernales Electric Cooperative, Inc.	Bradley Collard		None	N/A
1	Platte River Power Authority	Marissa Archie		Affirmative	N/A
1	Portland General Electric Co.	Brooke Jockin		Abstain	N/A
1	PPL Electric Utilities Corporation	Michelle McCartney Lennon		Negative	Third-Party Comments

© 2026 - NERC Ver 4.2.1.0 Machine Name: ATLVPEROWEB01

Segment	Organization	Voter	Designated Proxy	Ballot	NERC Memo
1	PSEG - Public Service Electric and Gas Co.	Karen Arnold		None	N/A
1	Public Utility District No. 1 of Chelan County	Robert Witham		Affirmative	N/A
1	Public Utility District No. 1 of Snohomish County	Alyssia Rhoads		Affirmative	N/A
1	Public Utility District No. 2 of Grant County, Washington	Joanne Anderson		Abstain	N/A
1	Sacramento Municipal Utility District	Wei Shao	Tim Kelley	Affirmative	N/A
1	Salt River Project	Laura Somak	Timothy Singh	Negative	Comments Submitted
1	Santee Cooper	Chris Wagner		Negative	Comments Submitted
1	SaskPower	Wayne Guttormson		Abstain	N/A
1	Seminole Electric Cooperative, Inc.	Khang Le		Negative	Comments Submitted
1	Sempra - San Diego Gas and Electric	Mo Derbas		Negative	Third-Party Comments
1	Sho-Me Power Electric Cooperative	Oskar Olson		None	N/A
1	Southern Company - Southern Company Services, Inc.	Matt Carden		None	N/A
1	Southwestern Power Administration	Angela Wheat		Abstain	N/A
1	Sunflower Electric Power Corporation	Paul Mehlhaff		Abstain	N/A
1	Tacoma Public Utilities (Tacoma, WA)	John Merrell	Jennie Wike	Affirmative	N/A
1	Tallahassee Electric (City of Tallahassee, FL)	Scott Langston		None	N/A

© 2026 - NERC Ver 4.2.1.0 Machine Name: ATLVPEROWEB01

Segment	Organization	Voter	Designated Proxy	Ballot	NERC Memo
1	Tennessee Valley Authority	David Plumb		Negative	Comments Submitted
1	Tri-State G and T Association, Inc.	Donna Wood		Affirmative	N/A
1	U.S. Bureau of Reclamation	Richard Jackson		Affirmative	N/A
1	Unisource - Tucson Electric Power Co.	Jessica Cordero		Negative	Comments Submitted
1	VELCO -Vermont Electric Power Company, Inc.	Randall Buswell		Abstain	N/A
1	Western Area Power Administration	Ben Hammer		Affirmative	N/A
1	Xcel Energy, Inc.	Eric Barry		Negative	Third-Party Comments
2	California ISO	Darcy O'Connell		Affirmative	N/A
2	Electric Reliability Council of Texas, Inc.	Kennedy Meier		Abstain	N/A
2	ISO New England, Inc.	John Pearson		Affirmative	N/A
2	Midcontinent ISO, Inc.	Kirsten Rowley		Abstain	N/A
2	New York Independent System Operator	Gregory Campoli		None	N/A
2	PJM Interconnection, L.L.C.	Thomas Foster	Elizabeth Davis	Abstain	N/A
2	Southwest Power Pool, Inc. (RTO)	Joshua Phillips		Abstain	N/A
3	AEP	Jodi Yeary		Negative	Comments Submitted
3	Ameren - Ameren Services	David Jendras Sr	Nick Leathers	Affirmative	N/A
3	APS - Arizona Public Service Co.	Jessica Lopez		Affirmative	N/A
3	Arkansas Electric Cooperative Corporation	Ayslynn Mcavoy		Abstain	N/A

© 2026 - NERC Ver 4.2.1.0 Machine Name: ATLVPEROWEB01

Segment	Organization	Voter	Designated Proxy	Ballot	NERC Memo
3	Associated Electric Cooperative, Inc.	Todd Bennett		Affirmative	N/A
3	Austin Energy	Lovita Griffin		None	N/A
3	Avista - Avista Corporation	Robert Follini		Affirmative	N/A
3	BC Hydro and Power Authority	Ming Jiang		Abstain	N/A
3	Berkshire Hathaway Energy - MidAmerican Energy Co.	Amy Key		Affirmative	N/A
3	Black Hills Corporation	Josh Combs		Affirmative	N/A
3	Bonneville Power Administration	Ron Sporseen		Negative	Comments Submitted
3	Buckeye Power, Inc.	Tom Schmidt	Ryan Strom	Negative	No Comment Submitted
3	Central Electric Power Cooperative (Missouri)	Adam Weber		Affirmative	N/A
3	City Utilities of Springfield, Missouri	Jessica Morrissey		Abstain	N/A
3	Colorado Springs Utilities	Hillary Dobson		Affirmative	N/A
3	Con Ed - Consolidated Edison Co. of New York	Lincoln Burton		Negative	Comments Submitted
3	Dominion - Dominion Virginia Power	Victoria Crider		Affirmative	N/A
3	Duke Energy - Florida Power Corporation	Marcelo Pesantez		None	N/A
3	Edison International - Southern California Edison Company	Romel Aquino		None	N/A
3	Entergy	James Keele		Affirmative	N/A
3	Evergy	Marcus Moor	Alan Kloster	Negative	Comments Submitted
3	Eversource Energy	Vicki O'Leary		Affirmative	N/A
3	Exelon	Kinte Whitehead		Affirmative	N/A

© 2026 - NERC Ver 4.2.1.0 Machine Name: ATLVPEROWEB01

Segment	Organization	Voter	Designated Proxy	Ballot	NERC Memo
3	FirstEnergy - FirstEnergy Corporation	Aaron Ghodooshim		Negative	Comments Submitted
3	Georgia System Operations Corporation	Scott McGough		None	N/A
3	Great River Energy	Michael Brytowski		Affirmative	N/A
3	Imperial Irrigation District	George Kirschner	Denise Sanchez	Affirmative	N/A
3	KAMO Electric Cooperative	Tony Gott		Affirmative	N/A
3	Lincoln Electric System	Sam Christensen		Affirmative	N/A
3	Los Angeles Department of Water and Power	Fausto Serratos		Affirmative	N/A
3	M and A Electric Power Cooperative	Gary Dollins		Affirmative	N/A
3	MEAG Power	Roger Brand	Rebika Yitna	Negative	Comments Submitted
3	MGE Energy - Madison Gas and Electric Co.	Benjamin Widder		Abstain	N/A
3	Muscatine Power and Water	Seth Shoemaker		Abstain	N/A
3	National Grid USA	Brian Shanahan		Abstain	N/A
3	Nebraska Public Power District	Tony Eddleman		Negative	Comments Submitted
3	New York Power Authority	Richard Machado		Negative	Comments Submitted
3	NextEra Energy - Florida Power and Light Co.	Karen Demos		Affirmative	N/A
3	NiSource - Northern Indiana Public Service Co.	Steven Taddeucci		Affirmative	N/A
3	Northeast Missouri Electric Power Cooperative	Skyler Wiegmann		None	N/A

© 2026 - NERC Ver 4.2.1.0 Machine Name: ATLVPEROWEB01

Segment	Organization	Voter	Designated Proxy	Ballot	NERC Memo
3	Northern California Power Agency	Michael Whitney	Chris Carnesi	None	N/A
3	NW Electric Power Cooperative, Inc.	Heath Henry		Affirmative	N/A
3	OGE Energy - Oklahoma Gas and Electric Co.	Donald Hargrove		Affirmative	N/A
3	Omaha Public Power District	David Heins		Affirmative	N/A
3	Orlando Utilities Commission	Ballard Mutters		None	N/A
3	OTP - Otter Tail Power Company	Tony Huseby		None	N/A
3	Pacific Gas and Electric Company	Sandra Ellis	Bob Cardle	Affirmative	N/A
3	Platte River Power Authority	Richard Kiess		Affirmative	N/A
3	Portland General Electric Co.	Mayra Franco		Abstain	N/A
3	PPL - Louisville Gas and Electric Co.	James Frank		Negative	Third-Party Comments
3	PSEG - Public Service Electric and Gas Co.	Christopher Murphy		None	N/A
3	Public Utility District No. 1 of Chelan County	Joyce Gundry		Affirmative	N/A
3	Puget Sound Energy, Inc.	Kelley Sargent		Affirmative	N/A
3	Sacramento Municipal Utility District	Nicole Looney	Tim Kelley	Affirmative	N/A
3	Salt River Project	Mathew Weber	Timothy Singh	Negative	Comments Submitted
3	Santee Cooper	Vicky Budreau		Negative	Comments Submitted
3	Seminole Electric Cooperative, Inc.	Usama Tahir		Negative	Comments Submitted

© 2026 - NERC Ver 4.2.1.0 Machine Name: ATLVPEROWEB01

Segment	Organization	Voter	Designated Proxy	Ballot	NERC Memo
3	Sempra - San Diego Gas and Electric	Bryan Bennett		Negative	Third-Party Comments
3	Sho-Me Power Electric Cooperative	Jarrod Murdaugh		Affirmative	N/A
3	Snohomish County PUD No. 1	Holly Chaney		Affirmative	N/A
3	Southern Company - Alabama Power Company	Joel Dembowski		None	N/A
3	Southern Indiana Gas and Electric Co.	Ryan Snyder		Abstain	N/A
3	Tennessee Valley Authority	Ian Grant		None	N/A
3	Tri-State G and T Association, Inc.	Amanda Skubal		Affirmative	N/A
3	TXNM Energy	Scott Thompson		Affirmative	N/A
3	Xcel Energy, Inc.	Nicholas Friebel		Negative	Third-Party Comments
4	Alliant Energy Corporation Services, Inc.	Angela Dockter	Lexi Dobrzysnki	Abstain	N/A
4	Arkansas Electric Cooperative Corporation	Jenni Sudduth		Abstain	N/A
4	Buckeye Power, Inc.	Jason Procuniar	Ryan Strom	Negative	No Comment Submitted
4	City Utilities of Springfield, Missouri	Jerry Bradshaw		Affirmative	N/A
4	FirstEnergy - FirstEnergy Corporation	Mark Garza		Negative	Comments Submitted
4	Georgia System Operations Corporation	Katrina Lyons		Negative	Third-Party Comments
4	Northern California Power Agency	Marty Hostler		None	N/A
4	Oklahoma Municipal Power Authority	Michael Watt		None	N/A
4	Public Utility District No. 1 of Snohomish County	John D. Martinsen		Affirmative	N/A

© 2026 - NERC Ver 4.2.1.0 Machine Name: ATLVPEROWEB01

Segment	Organization	Voter	Designated Proxy	Ballot	NERC Memo
4	Public Utility District No. 2 of Grant County, Washington	Karla Weaver		Abstain	N/A
4	Sacramento Municipal Utility District	Foung Mua	Tim Kelley	Affirmative	N/A
4	Utility Services, Inc.	Carver Powers		Affirmative	N/A
4	WEC Energy Group, Inc.	Candace Morakinyo		Abstain	N/A
4	Western Power Pool	Kevin Conway		Abstain	N/A
5	AEP	Thomas Foltz		Negative	Comments Submitted
5	Ameren - Ameren Missouri	Sam Dwyer		Affirmative	N/A
5	APS - Arizona Public Service Co.	Andrew Smith		Affirmative	N/A
5	Associated Electric Cooperative, Inc.	Chuck Booth		Affirmative	N/A
5	Austin Energy	Michael Dillard		Affirmative	N/A
5	Avista - Avista Corporation	Glen Farmer		None	N/A
5	BC Hydro and Power Authority	Vijay Raghunathan		Abstain	N/A
5	Berkshire Hathaway - NV Energy	Dwanique Spiller		None	N/A
5	Black Hills Corporation	Sheila Suurmeier		Affirmative	N/A
5	Buckeye Power, Inc.	Kevin Zemanek	Ryan Strom	Negative	No Comment Submitted
5	California Department of Water Resources	ASM Mostafa		None	N/A
5	CMS Energy - Consumers Energy Company	David Greyerbiehl		Abstain	N/A
5	Colorado Springs Utilities	Jeffrey Icke		Affirmative	N/A
5	Con Ed - Consolidated Edison Co. of New York	Michelle Pagano		Negative	Comments Submitted

© 2026 - NERC Ver 4.2.1.0 Machine Name: ATLVPEROWEB01

Segment	Organization	Voter	Designated Proxy	Ballot	NERC Memo
5	Constellation	Alison MacKellar		Abstain	N/A
5	Cowlitz County PUD	Deanna Carlson		None	N/A
5	Dairyland Power Cooperative	Tommy Drea		Abstain	N/A
5	Dominion - Dominion Resources, Inc.	Barbara Marion		Affirmative	N/A
5	DTE Energy	George Goddard		None	N/A
5	Duke Energy	Dale Goodwine		Affirmative	N/A
5	Edison International - Southern California Edison Company	Selene Willis		Affirmative	N/A
5	Electric Power Supply Association	Bill Zuretti		None	N/A
5	Entergy - Entergy Services, Inc.	Gail Golden		Affirmative	N/A
5	Evergy	Jeremy Harris	Alan Kloster	Negative	Comments Submitted
5	FirstEnergy - FirstEnergy Corporation	Matthew Augustin		Negative	Comments Submitted
5	Great River Energy	Jacalynn Bentz		Affirmative	N/A
5	Greybeard Compliance Services, LLC	Mike Gabriel		None	N/A
5	Hydro-Quebec (HQ)	Junji Yamaguchi	Chantal Mazza	Affirmative	N/A
5	Imperial Irrigation District	Tino Zaragoza	Denise Sanchez	Affirmative	N/A
5	JEA	John Babik		None	N/A
5	Lincoln Electric System	Brittany Millard		Affirmative	N/A
5	Los Angeles Department of Water and Power	Robert Kerrigan		Affirmative	N/A
5	Lower Colorado River Authority	Joseph Scott		Negative	Comments Submitted

© 2026 - NERC Ver 4.2.1.0 Machine Name: ATLVPEROWEB01

Segment	Organization	Voter	Designated Proxy	Ballot	NERC Memo
5	National Grid USA	Robin Berry		Abstain	N/A
5	NB Power Corporation - New Brunswick Power Transmission Corporation	David Melanson		Negative	Comments Submitted
5	Nebraska Public Power District	Ronald Bender		Negative	Third-Party Comments
5	New York Power Authority	Zahid Qayyum		Negative	Comments Submitted
5	NextEra Energy	Richard Vendetti		Affirmative	N/A
5	NiSource - Northern Indiana Public Service Co.	Kathryn Tackett		Affirmative	N/A
5	Northern California Power Agency	Jeremy Lawson	Chris Carnesi	None	N/A
5	NRG - NRG Energy, Inc.	Michael Scalise		None	N/A
5	OGE Energy - Oklahoma Gas and Electric Co.	Patrick Wells		Affirmative	N/A
5	Oglethorpe Power Corporation	Donna Johnson		Abstain	N/A
5	Oklahoma Municipal Power Authority	Patrick Tuttle		Abstain	N/A
5	Omaha Public Power District	Kayleigh Wilkerson		Affirmative	N/A
5	OTP - Otter Tail Power Company	Stacy Wahlund		None	N/A
5	Pacific Gas and Electric Company	Tyler Brun	Bob Cardle	Affirmative	N/A
5	Platte River Power Authority	Jon Osell		None	N/A
5	Portland General Electric Co.	Ryan Olson		Abstain	N/A
5	PPL - Louisville Gas and Electric Co.	Julie Hostrander		None	N/A
5	PSEG Nuclear LLC	Sharon Brown		Abstain	N/A

© 2026 - NERC Ver 4.2.1.0 Machine Name: ATLVPEROWEB01

Segment	Organization	Voter	Designated Proxy	Ballot	NERC Memo
5	Public Utility District No. 1 of Chelan County	Rebecca Wickel		Affirmative	N/A
5	Public Utility District No. 1 of Snohomish County	Becky Burden		Affirmative	N/A
5	Sacramento Municipal Utility District	Ryder Couch	Tim Kelley	Affirmative	N/A
5	Salt River Project	Matthew Jaramilla	Timothy Singh	Negative	Comments Submitted
5	Santee Cooper	Carey Salisbury		Negative	Comments Submitted
5	Seminole Electric Cooperative, Inc.	Melanie Wong		Negative	Comments Submitted
5	Sempra - San Diego Gas and Electric	Jennifer Wright		Negative	Third-Party Comments
5	Southern Company - Southern Company Generation	Leslie Burke		None	N/A
5	Southern Indiana Gas and Electric Co.	Larry Rogers		Abstain	N/A
5	Tennessee Valley Authority	Darren Boehm		Negative	Comments Submitted
5	Tri-State G and T Association, Inc.	Sergio Banuelos		Affirmative	N/A
5	U.S. Bureau of Reclamation	Wendy Kalidass		Affirmative	N/A
5	Xcel Energy, Inc.	Gerry Huitt		Negative	Third-Party Comments
6	AEP	Randy Calhoun		None	N/A
6	Ameren - Ameren Services	Robert Quinlivan		Affirmative	N/A
6	APS - Arizona Public Service Co.	Marcus Bortman	Brandon Smith	Affirmative	N/A
6	Arkansas Electric Cooperative Corporation	Bruce Walkup		Abstain	N/A

© 2026 - NERC Ver 4.2.1.0 Machine Name: ATLVPEROWEB01

Segment	Organization	Voter	Designated Proxy	Ballot	NERC Memo
6	Associated Electric Cooperative, Inc.	Brian Ackermann		Affirmative	N/A
6	Austin Energy	Imane Mrini		Affirmative	N/A
6	Berkshire Hathaway - PacifiCorp	Lindsay Wickizer		Affirmative	N/A
6	Black Hills Corporation	Josh Schumacher		Affirmative	N/A
6	Bonneville Power Administration	Tanner Brier		Negative	Comments Submitted
6	Cleco Corporation	Robert Hirchak	Clay Walker	None	N/A
6	Con Ed - Consolidated Edison Co. of New York	Jason Chandler		Negative	Comments Submitted
6	Constellation	Kimberly Turco		Abstain	N/A
6	Dominion - Dominion Resources, Inc.	Bill Garvey		Affirmative	N/A
6	Duke Energy	John Sturgeon		Affirmative	N/A
6	Edison International - Southern California Edison Company	Stephanie Kenny		Affirmative	N/A
6	Entergy	Julie Hall		None	N/A
6	Evergy	Tiffany Lake	Alan Kloster	Negative	Comments Submitted
6	FirstEnergy - FirstEnergy Corporation	Stacey Sheehan		Negative	Comments Submitted
6	Great River Energy	Brian Meloy		Affirmative	N/A
6	Imperial Irrigation District	Diana Torres	Denise Sanchez	Affirmative	N/A
6	Lincoln Electric System	Eric Ruskamp		Affirmative	N/A
6	Los Angeles Department of Water and Power	Anton Vu		Affirmative	N/A
6	Muscatine Power and Water	Nicholas Burns		Abstain	N/A

© 2026 - NERC Ver 4.2.1.0 Machine Name: ATLVPEROWEB01

Segment	Organization	Voter	Designated Proxy	Ballot	NERC Memo
6	New York Power Authority	Shelly Dineen		Negative	Comments Submitted
6	NextEra Energy - Florida Power and Light Co.	Justin Welty		Negative	Comments Submitted
6	NiSource - Northern Indiana Public Service Co.	Eugene Johnson		Affirmative	N/A
6	Northern California Power Agency	Dennis Sismaet	Chris Carnesi	None	N/A
6	OGE Energy - Oklahoma Gas and Electric Co.	Ashley F Stringer		Affirmative	N/A
6	Omaha Public Power District	Shonda Markus		Affirmative	N/A
6	Platte River Power Authority	Sabrina Martz		Affirmative	N/A
6	Portland General Electric Co.	Stefanie Burke		Abstain	N/A
6	Powerex Corporation	Raj Hundal		Abstain	N/A
6	PPL - Louisville Gas and Electric Co.	Linn Oelker		Negative	Third-Party Comments
6	PSEG - PSEG Energy Resources and Trade LLC	Laura Wu		None	N/A
6	Public Utility District No. 1 of Chelan County	Tamarra Hardie		Affirmative	N/A
6	Sacramento Municipal Utility District	Charles Norton	Tim Kelley	Affirmative	N/A
6	Salt River Project	Israel Perez	Timothy Singh	Negative	Comments Submitted
6	Santee Cooper	Marty Watson		Negative	Comments Submitted
6	Seminole Electric Cooperative, Inc.	Bret Galbraith		Negative	Comments Submitted
6	Snohomish County PUD No. 1	John Liang		Affirmative	N/A

© 2026 - NERC Ver 4.2.1.0 Machine Name: ATLVPEROWEB01

Segment	Organization	Voter	Designated Proxy	Ballot	NERC Memo
6	Southern Company - Southern Company Generation and Energy Marketing	Matthew O'neal		None	N/A
6	Southern Indiana Gas and Electric Co.	Kati Barr		Abstain	N/A
6	Tennessee Valley Authority	Jeffrey Powell		Negative	Comments Submitted
6	Western Area Power Administration	Jennifer Neville		Affirmative	N/A
6	Xcel Energy, Inc.	Patrick Flaherty		Negative	Third-Party Comments
10	Midwest Reliability Organization	Mark Flanary		Affirmative	N/A
10	New York State Reliability Council	Wesley Yeomans		Affirmative	N/A
10	Northeast Power Coordinating Council	Ruida Shu		Abstain	N/A
10	ReliabilityFirst	Tremayne Brown	Greg Sorenson	Affirmative	N/A
10	SERC Reliability Corporation	Dave Krueger		Abstain	N/A
10	Texas Reliability Entity, Inc.	Rachel Coyne		Affirmative	N/A
10	Western Electricity Coordinating Council	Steven Rueckert		Abstain	N/A

Previous 1 Next

Showing 1 to 287 of 287 entries

© 2026 - NERC Ver 4.2.1.0 Machine Name: ATLVPEROWEB01

BALLOT RESULTS

Ballot Name: Project 2023-06 CIP-014 Risk Assessment Refinement CIP-014-4 | Non-Binding Poll AB 3 NB
Voting Start Date: 7/11/2025 12:01:00 AM
Voting End Date: 7/21/2025 8:00:00 PM
Ballot Type: NB
Ballot Activity: AB
Ballot Series: 3
Total # Votes: 231
Total Ballot Pool: 281
Quorum: 82.21
Quorum Established Date: 7/21/2025 3:32:05 PM
Weighted Segment Value: 55.13

Segment	Ballot Pool	Segment Weight	Affirmative Votes	Affirmative Fraction	Negative Votes	Negative Fraction	Abstain	No Vote
Segment: 1	81	1	25	0.532	22	0.468	20	14
Segment: 2	7	0.2	2	0.2	0	0	4	1
Segment: 3	64	1	23	0.605	15	0.395	15	11
Segment: 4	14	0.6	4	0.4	2	0.2	6	2
Segment: 5	64	1	15	0.469	17	0.531	17	15
Segment: 6	44	1	13	0.481	14	0.519	10	7
Segment: 7	0	0	0	0	0	0	0	0
Segment: 8	0	0	0	0	0	0	0	0
Segment: 9	0	0	0	0	0	0	0	0

© 2026 - NERC Ver 4.2.1.0 Machine Name: ATLVPEROWEB01

Segment	Ballot Pool	Segment Weight	Affirmative Votes	Affirmative Fraction	Negative Votes	Negative Fraction	Abstain	No Vote
Segment: 10	7	0.4	4	0.4	0	0	3	0
Totals:	281	5.2	86	3.087	70	2.113	75	50

BALLOT POOL MEMBERS

Show All entries Search: Search

Segment	Organization	Voter	Designated Proxy	Ballot	NERC Memo
1	AEP - AEP Service Corporation	Dennis Sauriol		None	N/A
1	Allete - Minnesota Power, Inc.	Hillary Creurer		Negative	No Comment Submitted
1	Ameren - Ameren Services	Tamara Evey		Abstain	N/A
1	American Transmission Company, LLC	Amy Wilke		Affirmative	N/A
1	APS - Arizona Public Service Co.	Daniela Atanasovski		Negative	No Comment Submitted
1	Arkansas Electric Cooperative Corporation	Lily Green		None	N/A
1	Associated Electric Cooperative, Inc.	Mark Riley		Affirmative	N/A
1	Austin Energy	Thomas Standifur		Affirmative	N/A
1	Balancing Authority of Northern California	Kevin Smith	Tim Kelley	Affirmative	N/A

© 2026 - NERC Ver 4.2.1.0 Machine Name: ATLVPEROWEB01

Segment	Organization	Voter	Designated Proxy	Ballot	NERC Memo
1	BC Hydro and Power Authority	Patricia Robertson		Abstain	N/A
1	Berkshire Hathaway Energy - MidAmerican Energy Co.	Thomas Breen		Affirmative	N/A
1	Black Hills Corporation	Trevor Rombough		Abstain	N/A
1	Bonneville Power Administration	Kamala Rogers-Holliday		Negative	No Comment Submitted
1	CenterPoint Energy Houston Electric, LLC	Daniela Hammons		Negative	No Comment Submitted
1	Central Iowa Power Cooperative	Kevin Lyons		None	N/A
1	City Utilities of Springfield, Missouri	Michael Buyce		None	N/A
1	Colorado Springs Utilities	Corey Walker		Affirmative	N/A
1	Con Ed - Consolidated Edison Co. of New York	Dermot Smyth		Negative	No Comment Submitted
1	Dairyland Power Cooperative	Karrie Schuldt		Abstain	N/A
1	Dominion - Dominion Virginia Power	Steven Belle		Negative	No Comment Submitted
1	Duke Energy	Katherine Street		Affirmative	N/A
1	Edison International - Southern California Edison Company	Robert Blackney		Negative	No Comment Submitted
1	Entergy	Brian Lindsey		Affirmative	N/A
1	Evergy	Kevin Frick	Alan Kloster	Negative	No Comment Submitted
1	Exelon - ComEd	Terry London		Affirmative	N/A

© 2026 - NERC Ver 4.2.1.5 Machine Name: ATLVPERSWEB01

Segment	Organization	Voter	Designated Proxy	Ballot	NERC Memo
1	Exelon	Daniel Gacek		Affirmative	N/A
1	FirstEnergy - FirstEnergy Corporation	Theresa Ciancio		Negative	No Comment Submitted
1	Georgia Transmission Corporation	Greg Davis	Stephen Stafford	Negative	No Comment Submitted
1	Glencoe Light and Power Commission	Terry Volkmann		Negative	No Comment Submitted
1	Great River Energy	Gordon Pietsch		None	N/A
1	Hydro One Networks, Inc.	Emma Halilovic		Abstain	N/A
1	Hydro-Quebec (HQ)	Nicolas Turcotte	Chantal Mazza	Negative	No Comment Submitted
1	IDACORP - Idaho Power Company	Sean Steffensen		Affirmative	N/A
1	Imperial Irrigation District	Jesus Sammy Alcaraz	Denise Sanchez	Affirmative	N/A
1	International Transmission Company Holdings Corporation	Michael Moltane	Gail Elliott	Negative	No Comment Submitted
1	Lakeland Electric	Larry Watt		None	N/A
1	Lincoln Electric System	Josh Johnson		Abstain	N/A
1	Long Island Power Authority	Isidoro Behar		Abstain	N/A
1	Los Angeles Department of Water and Power	Jonathon Flores		Affirmative	N/A
1	Lower Colorado River Authority	Matt Lewis		None	N/A
1	M and A Electric Power Cooperative	William Price		Affirmative	N/A

© 2026 - NERC Ver 4.2.1.0 Machine Name: ATLVPEROWEB01

Segment	Organization	Voter	Designated Proxy	Ballot	NERC Memo
1	Minnkota Power Cooperative Inc.	Theresa Allard	Nikki Carson-Marquis	Negative	No Comment Submitted
1	Muscatine Power and Water	Andrew Kurriger		Abstain	N/A
1	N.W. Electric Power Cooperative, Inc.	Mark Ramsey		Affirmative	N/A
1	National Grid USA	Jacqueline Ryan		Abstain	N/A
1	NB Power Corporation	Jeffrey Streifling		Negative	No Comment Submitted
1	Nebraska Public Power District	Jamison Cawley		Abstain	N/A
1	Network and Security Technologies	Nick Lauriat		Abstain	N/A
1	New York Power Authority	Daniel Valle		Affirmative	N/A
1	NextEra Energy - Florida Power and Light Co.	Silvia Mitchell		Abstain	N/A
1	NiSource - Northern Indiana Public Service Co.	Alison Nickells		Affirmative	N/A
1	Northeast Missouri Electric Power Cooperative	Brett Douglas		Affirmative	N/A
1	OGE Energy - Oklahoma Gas and Electric Co.	Terri Pyle		Affirmative	N/A
1	Oncor Electric Delivery	Byron Booker	Lucinda Bradshaw	None	N/A
1	Pacific Gas and Electric Company	Marco Rios	Bob Cardle	Negative	No Comment Submitted
1	Pedernales Electric Cooperative, Inc.	Bradley Collard		None	N/A
1	Platte River Power Authority	Marissa Archie		Affirmative	N/A

© 2026 - NERC Ver 4.2.1.0 Machine Name: ATLVPEROWEB01

Segment	Organization	Voter	Designated Proxy	Ballot	NERC Memo
1	Portland General Electric Co.	Brooke Jockin		Abstain	N/A
1	PPL Electric Utilities Corporation	Michelle McCartney Longo		None	N/A
1	PSEG - Public Service Electric and Gas Co.	Karen Arnold		None	N/A
1	Public Utility District No. 1 of Chelan County	Robert Witham		Negative	No Comment Submitted
1	Public Utility District No. 1 of Snohomish County	Alyssia Rhoads		Affirmative	N/A
1	Public Utility District No. 2 of Grant County, Washington	Joanne Anderson		Abstain	N/A
1	Sacramento Municipal Utility District	Wei Shao	Tim Kelley	Affirmative	N/A
1	Salt River Project	Laura Somak	Timothy Singh	Negative	No Comment Submitted
1	Santee Cooper	Chris Wagner		Abstain	N/A
1	SaskPower	Wayne Guttormson		Abstain	N/A
1	Seminole Electric Cooperative, Inc.	Khang Le		Negative	No Comment Submitted
1	Sempra - San Diego Gas and Electric	Mo Derbas		Negative	No Comment Submitted
1	Sho-Me Power Electric Cooperative	Oskar Olson		None	N/A
1	Southern Company - Southern Company Services, Inc.	Matt Carden		None	N/A
1	Southwestern Power Administration	Angela Wheat		Abstain	N/A

© 2026 - NERC Ver 4.2.1.0 Machine Name: ATLVPEROWEB01

Segment	Organization	Voter	Designated Proxy	Ballot	NERC Memo
1	Sunflower Electric Power Corporation	Paul Mehlhaff		Abstain	N/A
1	Tacoma Public Utilities (Tacoma, WA)	John Merrell	Jennie Wike	Affirmative	N/A
1	Tallahassee Electric (City of Tallahassee, FL)	Scott Langston		None	N/A
1	Tennessee Valley Authority	David Plumb		Abstain	N/A
1	Tri-State G and T Association, Inc.	Donna Wood		Affirmative	N/A
1	U.S. Bureau of Reclamation	Richard Jackson		Affirmative	N/A
1	Unisource - Tucson Electric Power Co.	Jessica Cordero		Negative	No Comment Submitted
1	VELCO -Vermont Electric Power Company, Inc.	Randall Buswell		Abstain	N/A
1	Western Area Power Administration	Ben Hammer		Negative	No Comment Submitted
2	California ISO	Darcy O'Connell		Affirmative	N/A
2	Electric Reliability Council of Texas, Inc.	Kennedy Meier		Abstain	N/A
2	ISO New England, Inc.	John Pearson		Affirmative	N/A
2	Midcontinent ISO, Inc.	Kirsten Rowley		Abstain	N/A
2	New York Independent System Operator	Gregory Campoli		None	N/A
2	PJM Interconnection, L.L.C.	Thomas Foster	Elizabeth Davis	Abstain	N/A
2	Southwest Power Pool, Inc. (RTO)	Joshua Phillips		Abstain	N/A
3	AEP	Jodi Yeary		Negative	No Comment Submitted

© 2026 - NERC Ver 4.2.1.0 Machine Name: ATLVPEROWEB01

Segment	Organization	Voter	Designated Proxy	Ballot	NERC Memo
3	Ameren - Ameren Services	David Jendras Sr	Nick Leathers	Abstain	N/A
3	APS - Arizona Public Service Co.	Jessica Lopez		Negative	No Comment Submitted
3	Arkansas Electric Cooperative Corporation	Ayslynn Mcavoy		Abstain	N/A
3	Associated Electric Cooperative, Inc.	Todd Bennett		Affirmative	N/A
3	Austin Energy	Lovita Griffin		None	N/A
3	Avista - Avista Corporation	Robert Follini		Affirmative	N/A
3	BC Hydro and Power Authority	Ming Jiang		Abstain	N/A
3	Berkshire Hathaway Energy - MidAmerican Energy Co.	Amy Key		Affirmative	N/A
3	Black Hills Corporation	Josh Combs		Abstain	N/A
3	Bonneville Power Administration	Ron Sporseen		Negative	No Comment Submitted
3	Buckeye Power, Inc.	Tom Schmidt	Ryan Strom	Abstain	N/A
3	Central Electric Power Cooperative (Missouri)	Adam Weber		Affirmative	N/A
3	City Utilities of Springfield, Missouri	Jessica Morrissey		Abstain	N/A
3	Colorado Springs Utilities	Hillary Dobson		Affirmative	N/A
3	Con Ed - Consolidated Edison Co. of New York	Lincoln Burton		Negative	No Comment Submitted
3	Dominion - Dominion Virginia Power	Victoria Crider		Negative	No Comment Submitted
3	Duke Energy - Florida Power Corporation	Marcelo Pesantez		None	N/A

© 2026 - NERC Ver 4.2.1.0 Machine Name: ATLVPEROWEB01

Segment	Organization	Voter	Designated Proxy	Ballot	NERC Memo
3	Edison International - Southern California Edison Company	Romel Aquino		None	N/A
3	Entergy	James Keele		Affirmative	N/A
3	Evergy	Marcus Moor	Alan Kloster	Negative	No Comment Submitted
3	Eversource Energy	Vicki O'Leary		Affirmative	N/A
3	Exelon	Kinte Whitehead		Affirmative	N/A
3	FirstEnergy - FirstEnergy Corporation	Aaron Ghodooshim		Negative	No Comment Submitted
3	Georgia System Operations Corporation	Scott McGough		None	N/A
3	Great River Energy	Michael Brytowski		Affirmative	N/A
3	Imperial Irrigation District	George Kirschner	Denise Sanchez	Affirmative	N/A
3	KAMO Electric Cooperative	Tony Gott		Affirmative	N/A
3	Lincoln Electric System	Sam Christensen		Abstain	N/A
3	Los Angeles Department of Water and Power	Fausto Serratos		Affirmative	N/A
3	M and A Electric Power Cooperative	Gary Dollins		Affirmative	N/A
3	MEAG Power	Roger Brand	Rebika Yitna	Negative	No Comment Submitted
3	MGE Energy - Madison Gas and Electric Co.	Benjamin Widder		Abstain	N/A
3	Muscatine Power and Water	Seth Shoemaker		Abstain	N/A
3	National Grid USA	Brian Shanahan		Abstain	N/A

© 2026 - NERC Ver 4.2.1.0 Machine Name: ATLVPERGWEB01

Segment	Organization	Voter	Designated Proxy	Ballot	NERC Memo
3	Nebraska Public Power District	Tony Eddleman		Abstain	N/A
3	New York Power Authority	Richard Machado		Negative	No Comment Submitted
3	NextEra Energy - Florida Power and Light Co.	Karen Demos		Abstain	N/A
3	NiSource - Northern Indiana Public Service Co.	Steven Taddeucci		Affirmative	N/A
3	Northeast Missouri Electric Power Cooperative	Skyler Wiegmann		None	N/A
3	Northern California Power Agency	Michael Whitney	Chris Carnesi	None	N/A
3	NW Electric Power Cooperative, Inc.	Heath Henry		Affirmative	N/A
3	OGE Energy - Oklahoma Gas and Electric Co.	Donald Hargrove		Affirmative	N/A
3	Omaha Public Power District	David Heins		Affirmative	N/A
3	Orlando Utilities Commission	Ballard Mutters		None	N/A
3	Pacific Gas and Electric Company	Sandra Ellis	Bob Cardle	Negative	No Comment Submitted
3	Platte River Power Authority	Richard Kiess		Affirmative	N/A
3	Portland General Electric Co.	Mayra Franco		Abstain	N/A
3	PPL - Louisville Gas and Electric Co.	James Frank		None	N/A
3	PSEG - Public Service Electric and Gas Co.	Christopher Murphy		None	N/A
3	Public Utility District No. 1 of Chelan County	Joyce Gundry		Negative	No Comment Submitted

© 2026 - NERC Ver 4.2.1.0 Machine Name: ATLVPEROWEB01

Segment	Organization	Voter	Designated Proxy	Ballot	NERC Memo
3	Puget Sound Energy, Inc.	Kelley Sargent		Negative	No Comment Submitted
3	Sacramento Municipal Utility District	Nicole Looney	Tim Kelley	Affirmative	N/A
3	Salt River Project	Mathew Weber	Timothy Singh	Negative	No Comment Submitted
3	Santee Cooper	Vicky Budreau		Abstain	N/A
3	Seminole Electric Cooperative, Inc.	Usama Tahir		Negative	No Comment Submitted
3	Sempra - San Diego Gas and Electric	Bryan Bennett		Negative	No Comment Submitted
3	Sho-Me Power Electric Cooperative	Jarrod Murdaugh		Affirmative	N/A
3	Snohomish County PUD No. 1	Holly Chaney		Affirmative	N/A
3	Southern Company - Alabama Power Company	Joel Dembowski		None	N/A
3	Southern Indiana Gas and Electric Co.	Ryan Snyder		Abstain	N/A
3	Tennessee Valley Authority	Ian Grant		None	N/A
3	Tri-State G and T Association, Inc.	Amanda Skubal		Affirmative	N/A
3	TXNM Energy	Scott Thompson		Affirmative	N/A
4	Alliant Energy Corporation Services, Inc.	Angela Dockter	Lexi Dobrzysnki	Abstain	N/A
4	Arkansas Electric Cooperative Corporation	Jenni Sudduth		Abstain	N/A
4	Buckeye Power, Inc.	Jason Procuniar	Ryan Strom	Abstain	N/A
4	City Utilities of Springfield, Missouri	Jerry Bradshaw		Affirmative	N/A

© 2026 - NERC Ver 4.2.1.0 Machine Name: ATLVPEROWEB01

Segment	Organization	Voter	Designated Proxy	Ballot	NERC Memo
4	FirstEnergy - FirstEnergy Corporation	Mark Garza		Negative	No Comment Submitted
4	Georgia System Operations Corporation	Katrina Lyons		Negative	No Comment Submitted
4	Northern California Power Agency	Marty Hostler		None	N/A
4	Oklahoma Municipal Power Authority	Michael Watt		None	N/A
4	Public Utility District No. 1 of Snohomish County	John D. Martinsen		Affirmative	N/A
4	Public Utility District No. 2 of Grant County, Washington	Karla Weaver		Abstain	N/A
4	Sacramento Municipal Utility District	Foung Mua	Tim Kelley	Affirmative	N/A
4	Utility Services, Inc.	Carver Powers		Affirmative	N/A
4	WEC Energy Group, Inc.	Candace Morakinyo		Abstain	N/A
4	Western Power Pool	Kevin Conway		Abstain	N/A
5	AEP	Thomas Foltz		Negative	No Comment Submitted
5	Ameren - Ameren Missouri	Sam Dwyer		Abstain	N/A
5	APS - Arizona Public Service Co.	Andrew Smith		Negative	No Comment Submitted
5	Associated Electric Cooperative, Inc.	Chuck Booth		Affirmative	N/A
5	Austin Energy	Michael Dillard		Affirmative	N/A
5	Avista - Avista Corporation	Glen Farmer		None	N/A
5	BC Hydro and Power Authority	Vijay Raghunathan		Abstain	N/A

© 2026 - NERC Ver 4.2.1.0 Machine Name: ATLVPERGWEB01

Segment	Organization	Voter	Designated Proxy	Ballot	NERC Memo
5	Berkshire Hathaway - NV Energy	Dwanique Spiller		None	N/A
5	Black Hills Corporation	Sheila Suurmeier		Abstain	N/A
5	Buckeye Power, Inc.	Kevin Zemanek	Ryan Strom	Abstain	N/A
5	California Department of Water Resources	ASM Mostafa		None	N/A
5	CMS Energy - Consumers Energy Company	David Greyerbiehl		Abstain	N/A
5	Colorado Springs Utilities	Jeffrey Icke		Affirmative	N/A
5	Con Ed - Consolidated Edison Co. of New York	Michelle Pagano		Negative	No Comment Submitted
5	Constellation	Alison MacKellar		Abstain	N/A
5	Cowlitz County PUD	Deanna Carlson		None	N/A
5	Dairyland Power Cooperative	Tommy Drea		Abstain	N/A
5	Dominion - Dominion Resources, Inc.	Barbara Marion		Negative	No Comment Submitted
5	DTE Energy	George Goddard		None	N/A
5	Duke Energy	Dale Goodwine		Affirmative	N/A
5	Edison International - Southern California Edison Company	Selene Willis		Negative	No Comment Submitted
5	Electric Power Supply Association	Bill Zuretti		None	N/A
5	Entergy - Entergy Services, Inc.	Gail Golden		Affirmative	N/A
5	Evergy	Jeremy Harris	Alan Kloster	Negative	No Comment Submitted

© 2026 - NERC Ver 4.2.1.0 Machine Name: ATLVPEROWEB01

Segment	Organization	Voter	Designated Proxy	Ballot	NERC Memo
5	FirstEnergy - FirstEnergy Corporation	Matthew Augustin		Negative	No Comment Submitted
5	Great River Energy	Jacalynn Bentz		Affirmative	N/A
5	Greybeard Compliance Services, LLC	Mike Gabriel		None	N/A
5	Hydro-Quebec (HQ)	Junji Yamaguchi	Chantal Mazza	Negative	No Comment Submitted
5	Imperial Irrigation District	Tino Zaragoza	Denise Sanchez	Affirmative	N/A
5	JEA	John Babik		None	N/A
5	Lincoln Electric System	Brittany Millard		Abstain	N/A
5	Los Angeles Department of Water and Power	Robert Kerrigan		Affirmative	N/A
5	Lower Colorado River Authority	Joseph Scott		Negative	No Comment Submitted
5	National Grid USA	Robin Berry		Abstain	N/A
5	NB Power Corporation - New Brunswick Power Transmission Corporation	David Melanson		Negative	No Comment Submitted
5	Nebraska Public Power District	Ronald Bender		Abstain	N/A
5	New York Power Authority	Zahid Qayyum		Negative	No Comment Submitted
5	NextEra Energy	Richard Vendetti		Abstain	N/A
5	NiSource - Northern Indiana Public Service Co.	Kathryn Tackett		Affirmative	N/A
5	Northern California Power Agency	Jeremy Lawson	Chris Carnesi	None	N/A
5	NRG - NRG Energy, Inc.	Michael Scalise		None	N/A
5	OGE Energy - Oklahoma Gas and Electric Co.	Patrick Wells		Affirmative	N/A

© 2026 - NERC Ver 4.2.1.0 Machine Name: ATLVPEROWEB01

Segment	Organization	Voter	Designated Proxy	Ballot	NERC Memo
5	Oglethorpe Power Corporation	Donna Johnson		Abstain	N/A
5	Oklahoma Municipal Power Authority	Patrick Tuttle		Abstain	N/A
5	Omaha Public Power District	Kayleigh Wilkerson		Affirmative	N/A
5	OTP - Otter Tail Power Company	Stacy Wahlund		None	N/A
5	Pacific Gas and Electric Company	Tyler Brun	Bob Cardle	Negative	No Comment Submitted
5	Platte River Power Authority	Jon Osell		None	N/A
5	Portland General Electric Co.	Ryan Olson		Abstain	N/A
5	PPL - Louisville Gas and Electric Co.	Julie Hostrander		None	N/A
5	PSEG Nuclear LLC	Sharon Brown		Abstain	N/A
5	Public Utility District No. 1 of Chelan County	Rebecca Wickel		Negative	No Comment Submitted
5	Public Utility District No. 1 of Snohomish County	Becky Burden		Affirmative	N/A
5	Sacramento Municipal Utility District	Ryder Couch	Tim Kelley	Affirmative	N/A
5	Salt River Project	Matthew Jaramilla	Timothy Singh	Negative	No Comment Submitted
5	Santee Cooper	Carey Salisbury		Abstain	N/A
5	Seminole Electric Cooperative, Inc.	Melanie Wong		Negative	No Comment Submitted
5	Sempra - San Diego Gas and Electric	Jennifer Wright		Negative	No Comment Submitted

© 2026 - NERC Ver 4.2.1.0 Machine Name: ATLVPEROWEB01

Segment	Organization	Voter	Designated Proxy	Ballot	NERC Memo
5	Southern Company - Southern Company Generation	Leslie Burke		None	N/A
5	Southern Indiana Gas and Electric Co.	Larry Rogers		Abstain	N/A
5	Tennessee Valley Authority	Darren Boehm		None	N/A
5	Tri-State G and T Association, Inc.	Sergio Banuelos		Affirmative	N/A
5	U.S. Bureau of Reclamation	Wendy Kalidass		Affirmative	N/A
5	Xcel Energy, Inc.	Gerry Huitt		Negative	No Comment Submitted
6	AEP	Randy Calhoun		None	N/A
6	Ameren - Ameren Services	Robert Quinlivan		Abstain	N/A
6	APS - Arizona Public Service Co.	Marcus Bortman	Brandon Smith	Negative	No Comment Submitted
6	Arkansas Electric Cooperative Corporation	Bruce Walkup		Abstain	N/A
6	Associated Electric Cooperative, Inc.	Brian Ackermann		Affirmative	N/A
6	Austin Energy	Imane Mrini		Affirmative	N/A
6	Berkshire Hathaway - PacifiCorp	Lindsay Wickizer		Affirmative	N/A
6	Black Hills Corporation	Josh Schumacher		Abstain	N/A
6	Bonneville Power Administration	Tanner Brier		Negative	No Comment Submitted
6	Con Ed - Consolidated Edison Co. of New York	Jason Chandler		Negative	No Comment Submitted

© 2026 - NERC Ver 4.2.1.0 Machine Name: ATLVPEROWEB01

Segment	Organization	Voter	Designated Proxy	Ballot	NERC Memo
6	Constellation	Kimberly Turco		Abstain	N/A
6	Dominion - Dominion Resources, Inc.	Bill Garvey		Negative	No Comment Submitted
6	Duke Energy	John Sturgeon		Affirmative	N/A
6	Edison International - Southern California Edison Company	Stephanie Kenny		Negative	No Comment Submitted
6	Entergy	Julie Hall		None	N/A
6	Evergy	Tiffany Lake	Alan Kloster	Negative	No Comment Submitted
6	FirstEnergy - FirstEnergy Corporation	Stacey Sheehan		Negative	No Comment Submitted
6	Great River Energy	Brian Meloy		Affirmative	N/A
6	Imperial Irrigation District	Diana Torres	Denise Sanchez	Affirmative	N/A
6	Lincoln Electric System	Eric Ruskamp		Abstain	N/A
6	Los Angeles Department of Water and Power	Anton Vu		Affirmative	N/A
6	Muscatine Power and Water	Nicholas Burns		Abstain	N/A
6	New York Power Authority	Shelly Dineen		Negative	No Comment Submitted
6	NextEra Energy - Florida Power and Light Co.	Justin Welty		Negative	No Comment Submitted
6	NiSource - Northern Indiana Public Service Co.	Eugene Johnson		Affirmative	N/A
6	Northern California Power Agency	Dennis Sismaet	Chris Carnesi	None	N/A
6	OGE Energy - Oklahoma Gas and Electric Co.	Ashley F Stringer		Affirmative	N/A

© 2026 - NERC Ver 4.2.1.0 Machine Name: ATLVPEROWEB01

Segment	Organization	Voter	Designated Proxy	Ballot	NERC Memo
6	Omaha Public Power District	Shonda Markus		Affirmative	N/A
6	Platte River Power Authority	Sabrina Martz		Affirmative	N/A
6	Portland General Electric Co.	Stefanie Burke		Abstain	N/A
6	Powerex Corporation	Raj Hundal		Abstain	N/A
6	PPL - Louisville Gas and Electric Co.	Linn Oelker		None	N/A
6	PSEG - PSEG Energy Resources and Trade LLC	Laura Wu		None	N/A
6	Public Utility District No. 1 of Chelan County	Tamarra Hardie		Negative	No Comment Submitted
6	Sacramento Municipal Utility District	Charles Norton	Tim Kelley	Affirmative	N/A
6	Salt River Project	Israel Perez	Timothy Singh	Negative	No Comment Submitted
6	Santee Cooper	Marty Watson		Abstain	N/A
6	Seattle City Light	Daren Brubaker		None	N/A
6	Seminole Electric Cooperative, Inc.	Bret Galbraith		Negative	No Comment Submitted
6	Snohomish County PUD No. 1	John Liang		Affirmative	N/A
6	Southern Company - Southern Company Generation and Energy Marketing	Matthew O'neal		None	N/A
6	Southern Indiana Gas and Electric Co.	Kati Barr		Abstain	N/A
6	Tennessee Valley Authority	Jeffrey Powell		Negative	No Comment Submitted

© 2026 - NERC Ver 4.2.1.0 Machine Name: ATLVPEROWEB01

Segment	Organization	Voter	Designated Proxy	Ballot	NERC Memo
6	Western Area Power Administration	Jennifer Neville		Negative	No Comment Submitted
10	Midwest Reliability Organization	Mark Flanary		Affirmative	N/A
10	New York State Reliability Council	Wesley Yeomans		Affirmative	N/A
10	Northeast Power Coordinating Council	Ruida Shu		Abstain	N/A
10	ReliabilityFirst	Tremayne Brown	Greg Sorenson	Affirmative	N/A
10	SERC Reliability Corporation	Dave Krueger		Abstain	N/A
10	Texas Reliability Entity, Inc.	Rachel Coyne		Affirmative	N/A
10	Western Electricity Coordinating Council	Steven Rueckert		Abstain	N/A

Previous 1 Next

Showing 1 to 281 of 281 entries

© 2026 - NERC Ver 4.2.1.0 Machine Name: ATLVPEROWEB01

NERC
NORTH AMERICAN ELECTRIC RELIABILITY CORPORATION

Unofficial Comment Form

Project 2023-06 CIP-014 Risk Assessment Refinement

Be aware that this is a public proceeding, and comments are publicly available upon submission. DO NOT include any CEII or otherwise sensitive information in your comments.

Do not use this form for submitting comments. Use the Standards Balloting and Commenting System (SBS) to submit comments on draft three of **CIP-014-4 Physical Security** by **8 p.m. Eastern, Monday, July 21, 2025.**

Additional information is available on the project page. If you have questions, contact Senior Standards Developer, Ben Wu (via email), or at 470-542-6882.

Background Information

Due to an increase in reports of physical attacks on electric substations, the Federal Energy Regulatory Commission (FERC) issued the December 2022 Order in Docket No. RD23-2-000 directing NERC to evaluate the effectiveness of the Physical Security Reliability Standard CIP-014-3 in mitigating the risks to the Bulk-Power System (BPS) associated with physical attacks. In the report filed in response to a FERC directive, NERC staff identified continuing inconsistency in registered entity CIP-014-3 risk assessments to most appropriately identify critical infrastructure. FERC directed NERC to evaluate whether the physical security protection requirements in NERC's Reliability Standards are adequate to address the risks associated with physical attacks on BPS Facilities, including the adequacy of the required risk assessment in CIP-014-3 Requirement R1. In the report, NERC found that CIP-014-3 required revision to assure adequate and consistent approach in evaluating instability as well as the identification of infrastructure critical to the operation of the BPS.

Questions

1. Do you agree with the modifications made in CIP-014-4 with modified Requirement R1 to address the issues identified in the SAR? If you do not agree, please provide your recommendation and, if appropriate, technical or procedural justification.

   ☐ Yes
   ☐ No

   Comments:

2. Do you agree with the modifications made in CIP-014-4 with new Requirement R2 to address the issues identified in the SAR? If you do not agree, please provide your recommendation and, if appropriate, technical or procedural justification.

   ☐ Yes
   ☐ No

   Comments:

3. Do you agree with the modifications made in CIP-014-4 with new Requirement R3 to address the issues identified in the SAR? If you do not agree, please provide your recommendation and, if appropriate, technical or procedural justification.

   ☐ Yes
   ☐ No

   Comments:

4. Do you agree with the modifications made in CIP-014-4 with new Requirement R4 to address the issues identified in the SAR? If you do not agree, please provide your recommendation and, if appropriate, technical or procedural justification.

   ☐ Yes
   ☐ No

   Comments:

5. Do you agree with the modifications made in CIP-014-4 with adding Requirement R5 to address the issues identified in the SAR? If you do not agree, please provide your recommendation and, if appropriate, technical or procedural justification.

   ☐ Yes
   ☐ No

   Comments:

6. Do you agree with the Implementation Plan for CIP-014-4? If you think an alternate timeframe is needed, please propose an alternate implementation plan with a detailed explanation.

   ☐ Yes
   ☐ No

   Comments:

7. Do you believe there are alternatives or more cost-effective options to address the recommendations in CIP-014-4 to address the reliability issue of physical security? If so, please provide your recommendation and, if appropriate, technical, or procedural justification.

   ☐ Yes
   ☐ No

   Comments:

8. Provide any additional comments for the Drafting Team to consider, if desired.

   Comments:

NERC
NORTH AMERICAN ELECTRIC RELIABILITY CORPORATION

Standards Announcement

Project 2023-06 CIP-014 Risk Assessment Refinement

Formal Comment Period Open through July 21, 2025

Now Available

A 45-day formal comment period for draft three of **CIP-014-4 Physical Security** is open through **8 p.m. Eastern, Monday, July 21, 2025**.

The standard drafting team's considerations of the responses received from the previous comment period are reflected in this draft of the standard.

Reminder Regarding Corporate RBB Memberships

Under the NERC Rules of Procedure, each entity and its affiliates is collectively permitted one voting membership per Registered Ballot Body Segment. Each entity that undergoes a change in corporate structure (such as a merger or acquisition) that results in the entity or affiliated entities having more than the one permitted representative in a particular Segment must withdraw the duplicate membership(s) prior to joining new ballot pools or voting on anything as part of an existing ballot pool. Contact ballotadmin@nerc.net to assist with the removal of any duplicate registrations.

Commenting

Use the Standards Balloting and Commenting System (SBS) to submit comments. An unofficial Word version of the comment form is posted on the project page.

- *Contact NERC IT support directly at https://support.nerc.net/ (Monday – Friday, 8 a.m. - 5 p.m. Eastern) for problems regarding accessing the SBS due to a forgotten password, incorrect credential error messages, or system lock-out.*
- *Passwords expire every **6 months** and must be reset.*
- *The SBS **is not** supported for use on mobile devices.*
- *Please be mindful of ballot and comment period closing dates. We ask to **allow at least 48 hours** for NERC support staff to assist with inquiries. Therefore, it is recommended that users try logging into their SBS accounts **prior to the last day** of a comment/ballot period.*

Next Steps

Additional ballots for the standard and implementation plan, as well as a non-binding poll of the associated Violation Risk Factors and Violation Severity Levels, will be conducted **July 11 – July 21, 2025**.

For information on the Standards Development Process, refer to the Standard Processes Manual.

For more information or assistance, contact Senior Standards Developer, Ben Wu (via email) or at 470-542-6882. Subscribe to this project's observer mailing list by selecting "NERC Email Distribution Lists" from the "Service" drop-down menu and specify “Project 2023-06 CIP-014 Risk Assessment Refinement observer list” in the Description Box.



North American Electric Reliability Corporation
3353 Peachtree Rd, NE
Suite 600, North Tower
Atlanta, GA 30326
404-446-2560 | www.nerc.com

Comment Report

Project Name:	2023-06 CIP-014 Risk Assessment Refinement | Draft 3
Comment Period Start Date:	6/6/2025
Comment Period End Date:	7/21/2025
Associated Ballots:	Project 2023-06 CIP-014 Risk Assessment Refinement CIP-014-4 AB 3 ST Project 2023-06 CIP-014 Risk Assessment Refinement Implementation Plan AB 3 OT

There were 74 sets of responses, including comments from approximately 160 different people from approximately 98 companies representing 8 of the Industry Segments as shown in the table on the following pages.

Questions

1. Do you agree with the modifications made in CIP-014-4 with modified Requirement R1 to address the issues identified in the SAR? If you do not agree, please provide your recommendation and, if appropriate, technical or procedural justification.

2. Do you agree with the modifications made in CIP-014-4 with new Requirement R2 to address the issues identified in the SAR? If you do not agree, please provide your recommendation and, if appropriate, technical or procedural justification.

3. Do you agree with the modifications made in CIP-014-4 with new Requirement R3 to address the issues identified in the SAR? If you do not agree, please provide your recommendation and, if appropriate, technical or procedural justification.

4. Do you agree with the modifications made in CIP-014-4 with new Requirement R4 to address the issues identified in the SAR? If you do not agree, please provide your recommendation and, if appropriate, technical or procedural justification.

5. Do you agree with the modifications made in CIP-014-4 with adding Requirement R5 to address the issues identified in the SAR? If you do not agree, please provide your recommendation and, if appropriate, technical or procedural justification.

6. Do you agree with the Implementation Plan for CIP-014-4? If you think an alternate timeframe is needed, please propose an alternate implementation plan with a detailed explanation.

7. Do you believe there are alternatives or more cost-effective options to address the recommendations in CIP-014-4 to address the reliability issue of physical security? If so, please provide your recommendation and, if appropriate, technical, or procedural justification.

8. Provide any additional comments for the Drafting Team to consider, if desired.

Organization Name	Name	Segment(s)	Region	Group Name	Group Member Name	Group Member Organization	Group Member Segment(s)	Group Member Region
MRO	Anna Martinson	1,2,3,4,5,6	MRO	MRO Group	Shonda McCain	Omaha Public Power District (OPPD)	1,3,5,6	MRO
					Michael Brytowski	Great River Energy	1,3,5,6	MRO
					Jamison Cawley	Nebraska Public Power District	1,3,5	MRO
					Jay Sethi	Manitoba Hydro (MH)	1,3,5,6	MRO
					Husam Al-Hadidi	Manitoba Hydro (System Preformance)	1,3,5,6	MRO
					George Brown	Pattern Operators LP	5	MRO
					Amy Key	MidAmerican Energy Company (MEC)	1	MRO
					Seth Shoemaker	Muscatine Power & Water	1,3,5,6	MRO
					Michael Ayotte	ITC Holdings	1	MRO
					Peter Brown	Invenergy	5,6	MRO
					Angela Wheat	Southwestern Power Administration	1	MRO
					Joshua Phillips	Southwest Power Pool	2	MRO
					Patrick Tuttle	Oklahoma Municipal Power Authority	4,5	MRO
					Hayden Maples	Evergy	1,3,5,6	MRO
					Kirsten Rowley	MISO	2	MRO
					Andrew Coffelt	Kansas City Board of Public Utilities	1,3,5,6	MRO

Tennessee Valley Authority	Brian Millard	1,3,5,6	SERC	TVA RBB	Ian Grant	Tennessee Valley Authority	3	SERC
					David Plumb	Tennessee Valley Authority	1	SERC
					Darren Boehm	Tennessee Valley Authority	5	SERC
					Jeffrey Powell	Tennessee Valley Authority	6	SERC
Santee Cooper	Chris Wagner	1		Santee Cooper	Weijian Cong	Santee Cooper	1,3,5,6	SERC
					John Abrams	Santee Cooper	1,3,5,6	SERC
Exelon	Daniel Gacek	1		Exelon	Daniel Gacek	Exelon	1	RF
					Kinte Whitehead	Exelon	3	RF
Con Ed - Consolidated Edison Co. of New York	Dermot Smyth	1	NPCC	Con Edison	Dermot Smyth	Con Edison Company of New York	1,3,5,6	NPCC
					Edward Bedder	Orange & Rockland		NPCC
Jennie Wike	Jennie Wike		WECC	Tacoma Power	Jennie Wike	Tacoma Public Utilities	1,3,4,5,6	WECC
					John Merrell	Tacoma Public Utilities (Tacoma, WA)	1	WECC
					John Nierenberg	Tacoma Public Utilities (Tacoma, WA)	3	WECC
					Hien Ho	Tacoma Public Utilities (Tacoma, WA)	4	WECC
					Terry Gifford	Tacoma Public Utilities (Tacoma, WA)	6	WECC
					Ozan Ferrin	Tacoma Public Utilities (Tacoma, WA)	5	WECC
Black Hills Corporation	Josh Schumacher	6		Black Hills Corporation Segments 1, 3, 5, 6	Trevor Rombough	Black Hills Corporation	1	WECC
					Josh Combs	Black Hills Corporation	3	WECC

					Sheila Suurmeier	Black Hills Corporation	5	WECC
					Josh Schumacher	Black Hills Corporation	6	WECC
FirstEnergy - FirstEnergy Corporation	Mark Garza	4		FE Voter	Julie Severino	FirstEnergy - FirstEnergy Corporation	1	RF
					Aaron Ghodooshim	FirstEnergy - FirstEnergy Corporation	3	RF
					Robert Loy	FirstEnergy - FirstEnergy Solutions	5	RF
					Mark Garza	FirstEnergy-FirstEnergy	1,3,4,5,6	RF
					Stacey Sheehan	FirstEnergy - FirstEnergy Corporation	6	RF
California ISO	Monika Montez	2	WECC	ISO/RTO Council Standards Review Committee (SRC)	Monika Montez	CAISO	2	WECC
					John Pearson	ISO New England, Inc.	2	NPCC
					Gregory Campoli	New York Independent System Operator	2	NPCC
					Kennedy Meier	Electric Reliability Council of Texas, Inc.	2	Texas RE
					Elizabeth Davis	PJM	2	SERC
Northeast Power Coordinating Council	Ruida Shu	10	NPCC	NPCC RSC	Gerry Dunbar	Northeast Power Coordinating Council	10	NPCC
					Deidre Altobell	Con Edison	1	NPCC
					Michele Tondalo	United Illuminating Co.	1	NPCC
					Stephanie Ullah-Mazzuca	Orange and Rockland	1	NPCC
					Michael Ridolfino	Central Hudson Gas & Electric Corp.	1	NPCC

Randy Buswell	Vermont Electric Power Company	1	NPCC
James Grant	NYISO	2	NPCC
Dermot Smyth	Con Ed - Consolidated Edison Co. of New York	1	NPCC
David Burke	Orange and Rockland	3	NPCC
Salvatore Spagnolo	New York Power Authority	1	NPCC
Sean Bodkin	Dominion - Dominion Resources, Inc.	6	NPCC
Silvia Mitchell	NextEra Energy - Florida Power and Light Co.	1	NPCC
Sean Cavote	PSEG	4	NPCC
Jason Chandler	Con Edison	5	NPCC
Shivaz Chopra	New York Power Authority	6	NPCC
Vijay Puran	New York State Department of Public Service	6	NPCC
David Kiguel	Independent	7	NPCC
Joel Charlebois	AESI	7	NPCC
Joshua London	Eversource Energy	1	NPCC
Joel Charlebois	AESI	7	NPCC
John Hastings	National Grid	1	NPCC
Erin Wilson	NB Power	1	NPCC
James Grant	NYISO	2	NPCC
Michael Couchesne	ISO-NE	2	NPCC
Kurtis Chong	IESO	2	NPCC

					Michele Pagano	Con Edison	4	NPCC
					Bendong Sun	Bruce Power	4	NPCC
					Carvers Powers	Utility Services	5	NPCC
					Wes Yeomans	NYSRC	7	NPCC
					Emma Halilovic	Hydro One	1,3	NPCC
					Philip Nichols	National Grid	1	NPCC
					Emma Halilovic	Hydro One	1,3	NPCC
					Caver Powers	Utility Services	5	NPCC
Public Utility District No. 1 of Chelan County	Tamarra Hardie	6		CHPD	Joyce Gundry	Public Utility District No. 1 of Chelan County	3	WECC
					Rebecca Zahler	Public Utility District No. 1 of Chelan County	5	WECC
					Diane Landry	Public Utility District No. 1 of Chelan County	1	WECC
Tim Kelley	Tim Kelley		WECC	SMUD and BANC	Nicole Looney	Sacramento Municipal Utility District	3	WECC
					Charles Norton	Sacramento Municipal Utility District	6	WECC
					Wei Shao	Sacramento Municipal Utility District	1	WECC
					Foung Mua	Sacramento Municipal Utility District	4	WECC
					Nicole Goi	Sacramento Municipal Utility District	5	WECC
					Kevin Smith	Balancing Authority of Northern California	1	WECC

1. Do you agree with the modifications made in CIP-014-4 with modified Requirement R1 to address the issues identified in the SAR? If you do not agree, please provide your recommendation and, if appropriate, technical or procedural justification.

Nikki Carson-Marquis - Nikki Carson-Marquis On Behalf of: Theresa Allard, Minnkota Power Cooperative Inc., 1; - Nikki Carson-Marquis

Answer	No
Document Name	

Comment

MPC continues to strongly disagree with the use of a 36-month timeframe for utilities who have not previously identified stations or substations as applicable. Increasing the study frequency from every 60 months to every 36 months increases the study burden and cost for utilities without applicable Transmission station(s) or substation(s) while providing no documented benefit to reliability of the BES. MPC proposes to retain the every 60 month requirement for entities that have not identified applicable assets, and include Transmission station(s) and Transmission substation(s) planned to be in service within 60 calendar months. Please see MPC's response to Question 5 for more discussion.

Likes 0	
Dislikes 0	

Response

Isidoro Behar - Long Island Power Authority - 1

Answer	No
Document Name	

Comment

Question for the SDT: Considering the Measure 1 verbiage ("evidence may include, but are not limited to, dated written or electronic documentation of the Transmission station(s) and Transmission substation(s) (existing and those planned to be in service within 36 calendar months) that meet any of the criteria in Attachment 1."), what action is needed to demonstrate compliance with respect to "identifying" applicable stations, and what notification(s) is needed? Our observation is that the Req #1 verbiage and the Measure 1 verbiage do not align.

Additionally, we observe that the term "applicable" station is introduced in Req# 1 and is used throughout the standard. The term "proximate" station is introduced in Req #2 and is referred to in Reqs 3.3 and 5. Based on this revision to the standard, these are two distinct sets of stations (applicable and proximate). We observe that for a few requirements / sub-requirements, there may be a possible gap or point of confusion as to whether a proximate station needs to meet the requirement / sub-requirement.

As a general comment, we recommend that the specific use of both of these terms be reviewed in fine detail to ensure no that there will no confusion as to whether a requirement pertains to an applicable station, a proximate station, or to both.

Likes 0	
Dislikes 0	

Response

Steven Belle - Dominion - Dominion Virginia Power - 1	
Answer	No
Document Name	
Comment	
Dominon beleives that 36 months identification requirement for planned substations is unrealistic and difficult to predict based on constructon delays, supply chain, outage planning and RTO planning requirements.	
Likes 0	
Dislikes 0	
Response	
Jamison Cawley - Nebraska Public Power District - 1	
Answer	No
Document Name	
Comment	
We do not support the change from 60 months (with no previous applicable substation) to 36 months as there appears to be no technical basis that supports this change. This timeframe causes the Transmission Owner (TO) to enter an unknown state of compliance with CIP-014 if they are on Years 4-5 from the previous 60-month Requirement. The current state of the risk assessment requirements is subjective and TO's should not be forced to perform subjective study efforts on a more frequent basis which only pulls important resources in directions that provide no value to the industry. Further, most significant EHV expansion projects which would actually change the previous base case assumptions do not occur every 36 months and are more in line with 60-month construction periods.	
Likes 1	Nebraska Public Power District, 5, Bender Ronald
Dislikes 0	
Response	
Melanie Wong - Seminole Electric Cooperative, Inc. - 5	
Answer	No
Document Name	
Comment	
Likes 0	
Dislikes 0	

Response

Amy Wilke - American Transmission Company, LLC - 1	
Answer	Yes
Document Name	
Comment	
ATC agrees with MRO NSRF comments.	
Likes 0	
Dislikes 0	
Response	

Andrew Smith - APS - Arizona Public Service Co. - 5	
Answer	Yes
Document Name	
Comment	
AZPS agrees with the modifications made in R1	
Likes 0	
Dislikes 0	
Response	

Randy Peters - Manitoba Hydro - 1,3,5,6 - MRO	
Answer	Yes
Document Name	
Comment	
Manitoba Hydro agrees with the change that all entities should identify applicable substations every 36 months.	
Likes 0	
Dislikes 0	
Response	

Mark Garza - FirstEnergy - FirstEnergy Corporation - 4, Group Name FE Voter	
Answer	Yes
Document Name	
Comment	
FirstEnergy agrees with the modifications made to Requirement R1.	
Likes 0	
Dislikes 0	
Response	
Bob Cardle - Bob Cardle On Behalf of: Marco Rios, Pacific Gas and Electric Company, 3, 1, 5; Sandra Ellis, Pacific Gas and Electric Company, 3, 1, 5; Tyler Brun, Pacific Gas and Electric Company, 3, 1, 5; - Bob Cardle	
Answer	Yes
Document Name	
Comment	
A three-year calendar cycle is easier to follow.	
Likes 0	
Dislikes 0	
Response	
Josh Schumacher - Black Hills Corporation - 6, Group Name Black Hills Corporation Segments 1, 3, 5, 6	
Answer	Yes
Document Name	
Comment	
Black Hills Corporation agrees with the modifications made in CIP-014-4 Requirement R1.	
Likes 0	
Dislikes 0	
Response	
Misty Carneal - Duke Energy - 1,3,5,6 - Texas RE,SERC,RF	
Answer	Yes

Document Name	
Comment	
Duke Energy supports the modifications to R1.	
Likes 0	
Dislikes 0	
Response	
Matt Carden - Southern Company - Southern Company Services, Inc. - 1	
Answer	Yes
Document Name	
Comment	
Southern Company agrees with the modifications made in CIP-014-4 Requirement R1.	
Likes 0	
Dislikes 0	
Response	
Timothy Singh - Timothy Singh On Behalf of: Israel Perez, Salt River Project, 3, 6, 5, 1; Laura Somak, Salt River Project, 3, 6, 5, 1; Mathew Weber, Salt River Project, 3, 6, 5, 1; Matthew Jaramilla, Salt River Project, 3, 6, 5, 1; - Timothy Singh	
Answer	Yes
Document Name	
Comment	
SRP agrees with the consolidation of timelines into a single 36-month cycle in Requirment R1.	
Likes 0	
Dislikes 0	
Response	
Nick Leathers - Nick Leathers On Behalf of: David Jendras Sr, Ameren - Ameren Services, 3, 6, 1; - Nick Leathers	
Answer	Yes
Document Name	
Comment	

Ameren agrees with EEI's comments.	
Likes 0	
Dislikes 0	
Response	
Selene Willis - Edison International - Southern California Edison Company - 5	
Answer	Yes
Document Name	
Comment	
"Please see EEI Comments"	
Likes 0	
Dislikes 0	
Response	
Richard Vendetti - NextEra Energy - 5	
Answer	Yes
Document Name	
Comment	
Nextera agrees with modifications made in CIP-04-4, R1	
Likes 0	
Dislikes 0	
Response	
Kristine Martz - Edison Electric Institute - NA - Not Applicable - NA - Not Applicable	
Answer	Yes
Document Name	
Comment	
EEI agrees with the modifications made in CIP-014-4 Requirement R1.	

Likes 0	
Dislikes 0	
Response	
Dan Perry - TXNM Energy - 1,3,5 - WECC,Texas RE	
Answer	Yes
Document Name	
Comment	
TXNM Energy agrees with modifications made in CIP-014-4 Requirement R1	
Likes 0	
Dislikes 0	
Response	
Lucinda Bradshaw - Lucinda Bradshaw On Behalf of: Byron Booker, Oncor Electric Delivery, 1; - Lucinda Bradshaw	
Answer	Yes
Document Name	
Comment	
N/A	
Likes 0	
Dislikes 0	
Response	
Kelley Sargent - Puget Sound Energy, Inc. - 3	
Answer	Yes
Document Name	
Comment	
Agree with modification to reduce risk assessment frequency to every 36 months (from current every 30 months) and increase study window for planned substations to 36 months (from current 24 months).	
Likes 0	
Dislikes 0	

Response
Robert Blackney - Edison International - Southern California Edison Company - 1
Answer	Yes
Document Name	
Comment
See comments submitted by Edison Electric Institute.
Likes 0	
Dislikes 0	
Response
Monika Montez - California ISO - 2 - WECC, Group Name ISO/RTO Council Standards Review Committee (SRC)
Answer	Yes
Document Name	
Comment
The ISO/RTO Council (IRC) Standards Review Committee (SRC) agrees that the SAR achieves consistency.
Likes 0	
Dislikes 0	
Response
Kennedy Meier - Electric Reliability Council of Texas, Inc. - 2
Answer	Yes
Document Name	
Comment
ERCOT joins the comments submitted by the ISO/RTO Council (IRC) Standards Review Committee (SRC) and adopts them as its own.
Likes 0	
Dislikes 0	
Response

Nazra Gladu - Manitoba Hydro - 1	
Answer	Yes
Document Name	
Comment	
Likes 0	
Dislikes 0	
Response	
Alison Nickells - NiSource - Northern Indiana Public Service Co. - 1	
Answer	Yes
Document Name	
Comment	
Likes 0	
Dislikes 0	
Response	
Sean Steffensen - IDACORP - Idaho Power Company - 1	
Answer	Yes
Document Name	
Comment	
Likes 0	
Dislikes 0	
Response	
Kevin Conway - Western Power Pool - 4	
Answer	Yes
Document Name	
Comment	

Likes 0	
Dislikes 0	
Response	
Jeffrey Streifling - NB Power Corporation - 1	
Answer	Yes
Document Name	
Comment	
Likes 0	
Dislikes 0	
Response	
Tamarra Hardie - Public Utility District No. 1 of Chelan County - 6, Group Name CHPD	
Answer	Yes
Document Name	
Comment	
Likes 0	
Dislikes 0	
Response	
Anna Martinson - MRO - 1,2,3,4,5,6 - MRO, Group Name MRO Group	
Answer	Yes
Document Name	
Comment	
Likes 0	
Dislikes 0	
Response	
Amy Key - Berkshire Hathaway Energy - MidAmerican Energy Co. - 3	

Answer	Yes
Document Name	
Comment	
Likes 0	
Dislikes 0	
Response	
Stephen Stafford - Stephen Stafford On Behalf of: Greg Davis, Georgia Transmission Corporation, 1; - Stephen Stafford	
Answer	Yes
Document Name	
Comment	
Likes 0	
Dislikes 0	
Response	
James Keele - Entergy - 3	
Answer	Yes
Document Name	
Comment	
Likes 0	
Dislikes 0	
Response	
Jessica Cordero - Unisource - Tucson Electric Power Co. - 1	
Answer	Yes
Document Name	
Comment	
Likes 0	

Dislikes 0	
Response	
Thomas Breen - Berkshire Hathaway Energy - MidAmerican Energy Co. - 1	
Answer	Yes
Document Name	
Comment	
Likes 0	
Dislikes 0	
Response	
Darko Kovac, P.E. - Gainesville Regional Utilities - 1,3,5	
Answer	Yes
Document Name	
Comment	
Likes 0	
Dislikes 0	
Response	
Diana Aguas - CenterPoint Energy Houston Electric, LLC - 1 - Texas RE	
Answer	Yes
Document Name	
Comment	
Likes 0	
Dislikes 0	
Response	
Tim Kelley - Tim Kelley On Behalf of: Charles Norton, Sacramento Municipal Utility District, 3, 6, 4, 1, 5; Foung Mua, Sacramento Municipal Utility District, 3, 6, 4, 1, 5; Kevin Smith, Balancing Authority of Northern California, 1; Nicole Looney, Sacramento Municipal Utility District, 3,	

6, 4, 1, 5; Ryder Couch, Sacramento Municipal Utility District, 3, 6, 4, 1, 5; Wei Shao, Sacramento Municipal Utility District, 3, 6, 4, 1, 5; - Tim Kelley, Group Name SMUD and BANC	
Answer	Yes
Document Name	
Comment	
Likes 0	
Dislikes 0	
Response	
Donna Wood - Tri-State G and T Association, Inc. - 1	
Answer	Yes
Document Name	
Comment	
Likes 0	
Dislikes 0	
Response	
Greg Sorenson - Greg Sorenson On Behalf of: Tremayne Brown, ReliabilityFirst , 10; - Greg Sorenson	
Answer	Yes
Document Name	
Comment	
Likes 0	
Dislikes 0	
Response	
David Melanson - NB Power Corporation - New Brunswick Power Transmission Corporation - 5	
Answer	Yes
Document Name	
Comment	

Likes 0	
Dislikes 0	
Response	
Jodi Yeary - AEP - 3	
Answer	Yes
Document Name	
Comment	
Likes 0	
Dislikes 0	
Response	
Brian Millard - Tennessee Valley Authority - 1,3,5,6 - SERC, Group Name TVA RBB	
Answer	Yes
Document Name	
Comment	
Likes 0	
Dislikes 0	
Response	
Phillip Martinez - Phillip Martinez On Behalf of: Richard Jackson, U.S. Bureau of Reclamation, 1, 5; - U.S. Bureau of Reclamation - 1 - WECC	
Answer	Yes
Document Name	
Comment	
Likes 0	
Dislikes 0	
Response	

Dermot Smyth - Con Ed - Consolidated Edison Co. of New York - 1, Group Name Con Edison	
Answer	Yes
Document Name	
Comment	
Likes 0	
Dislikes 0	
Response	
Dave Krueger - SERC Reliability Corporation - 10	
Answer	Yes
Document Name	
Comment	
Likes 0	
Dislikes 0	
Response	
Jason Chandler - Con Ed - Consolidated Edison Co. of New York - 6	
Answer	Yes
Document Name	
Comment	
Likes 0	
Dislikes 0	
Response	
Wendy Kalidass - U.S. Bureau of Reclamation - 5	
Answer	Yes
Document Name	
Comment	

Likes 0	
Dislikes 0	
Response	
Chantal Mazza - Chantal Mazza On Behalf of: Junji Yamaguchi, Hydro-Quebec (HQ), 1, 5; Nicolas Turcotte, Hydro-Quebec (HQ), 1, 5; - Chantal Mazza	
Answer	Yes
Document Name	
Comment	
Likes 0	
Dislikes 0	
Response	
Lincoln Burton - Con Ed - Consolidated Edison Co. of New York - 3	
Answer	Yes
Document Name	
Comment	
Likes 0	
Dislikes 0	
Response	
Alan Kloster - Alan Kloster On Behalf of: Jeremy Harris, Evergy, 3, 5, 1, 6; Kevin Frick, Evergy, 3, 5, 1, 6; Marcus Moor, Evergy, 3, 5, 1, 6; Tiffany Lake, Evergy, 3, 5, 1, 6; - Alan Kloster	
Answer	Yes
Document Name	
Comment	
Likes 0	
Dislikes 0	
Response	

Rachel Coyne - Texas Reliability Entity, Inc. - 10	
Answer	Yes
Document Name	
Comment	
Likes 0	
Dislikes 0	
Response	
Mark Flanary - Midwest Reliability Organization - 10	
Answer	Yes
Document Name	
Comment	
Likes 0	
Dislikes 0	
Response	
Zahid Qayyum - New York Power Authority - 5	
Answer	Yes
Document Name	
Comment	
Likes 0	
Dislikes 0	
Response	
Michelle Pagano - Con Ed - Consolidated Edison Co. of New York - 5	
Answer	Yes
Document Name	
Comment	

Likes 0	
Dislikes 0	
Response	
Rebika Yitna - Rebika Yitna On Behalf of: Roger Brand, MEAG Power, 3, 1; - Rebika Yitna	
Answer	Yes
Document Name	
Comment	
Likes 0	
Dislikes 0	
Response	
Ben Hammer - Western Area Power Administration - 1	
Answer	Yes
Document Name	
Comment	
Likes 0	
Dislikes 0	
Response	
Ruida Shu - Northeast Power Coordinating Council - 10, Group Name NPCC RSC	
Answer	Yes
Document Name	
Comment	
Likes 0	
Dislikes 0	
Response	
Robert Follini - Avista - Avista Corporation - 3	

Answer	Yes
Document Name	
Comment	
Likes 0	
Dislikes 0	
Response	
Chris Wagner - Santee Cooper - 1, Group Name Santee Cooper	
Answer	Yes
Document Name	
Comment	
Likes 0	
Dislikes 0	
Response	
Hillary Creurer - Allete - Minnesota Power, Inc. - 1	
Answer	Yes
Document Name	
Comment	
Likes 0	
Dislikes 0	
Response	
Joseph Scott - Lower Colorado River Authority - 5	
Answer	Yes
Document Name	
Comment	
Likes 0	

Dislikes 0	
Response	
Gail Elliott - Gail Elliott On Behalf of: Michael Moltane, International Transmission Company Holdings Corporation, 1; - Gail Elliott	
Answer	Yes
Document Name	
Comment	
Likes 0	
Dislikes 0	
Response	
Wesley Maurer - Lower Colorado River Authority - 1 - Texas RE	
Answer	Yes
Document Name	
Comment	
Likes 0	
Dislikes 0	
Response	
Carver Powers - Utility Services, Inc. - 4	
Answer	Yes
Document Name	
Comment	
Likes 0	
Dislikes 0	
Response	
Elizabeth Davis - Elizabeth Davis On Behalf of: Thomas Foster, PJM Interconnection, L.L.C., 2; - Elizabeth Davis	
Answer	Yes

Document Name	
Comment	
Likes 0	
Dislikes 0	
Response	
Jennie Wike - Jennie Wike On Behalf of: John Merrell, Tacoma Public Utilities (Tacoma, WA), 1, 4, 5, 6, 3; - Jennie Wike, Group Name Tacoma Power	
Answer	Yes
Document Name	
Comment	
Likes 0	
Dislikes 0	
Response	
Daniel Gacek - Exelon - 1, Group Name Exelon	
Answer	Yes
Document Name	
Comment	
Likes 0	
Dislikes 0	
Response	
Emma Halilovic - Hydro One Networks, Inc. - 1	
Answer	Yes
Document Name	
Comment	
Likes 0	

Dislikes 0	
Response	
Lexi Dobrzysnki - Lexi Dobrzysnki On Behalf of: Angela Dockter, Alliant Energy Corporation Services, Inc., 4; - Lexi Dobrzysnki	
Answer	
Document Name	
Comment	
Alliant Energy mirrors the MRO NSRF group Comments.	
Likes 0	
Dislikes 0	
Response	

2. Do you agree with the modifications made in CIP-014-4 with new Requirement R2 to address the issues identified in the SAR? If you do not agree, please provide your recommendation and, if appropriate, technical or procedural justification.

Emma Halilovic - Hydro One Networks, Inc. - 1

Answer	No
Document Name	2023-06 Draft_3_Comment_Form.docx

Comment

See attached for recommendations and rationales.

Likes 0	
Dislikes 0	

Response

Robert Blackney - Edison International - Southern California Edison Company - 1

Answer	No
Document Name	

Comment

See comments submitted by Edison Electric Institute.

Likes 0	
Dislikes 0	

Response

Lucinda Bradshaw - Lucinda Bradshaw On Behalf of: Byron Booker, Oncor Electric Delivery, 1; - Lucinda Bradshaw

Answer	No
Document Name	

Comment

Oncor appreciates that the ambiguous sub-requirements have been removed from Requirement R2, but ambiguity remains in the proposed revised Requirement R2. As a result, Oncor does not fully agree with the modifications made in new Requirement R2.

Oncor's previous comment on revised Requirement R2 requested clarification as to what voltage classes are applicable for proximate Transmission stations and Transmission substations. In the Drafting Team's response, the Drafting Team clarified that proximate Transmission stations and Transmission substations should only be considered if they are part of the Bulk Electric System (operated at 100 kV or higher). At no point is this clarified in the language of the revised Standard. Because the Standard currently only identifies an exclusion for voltages below 200 kV, Oncor recommends CIP-014-4 Requirement R2 be clarified by adding a statement that proximate Transmission stations and Transmission substations only

require consideration if they are part of the Bulk Electric System. Oncor proposes that the following sentence be added to the end of the existing proposed revised Requirement 2: "***Transmission Owners only need to identify proximate Transmission station(s) and Transmission substation(s) that are part of the Bulk Electric System.***"

Oncor also previously commented on the burdensome task of coordination with other parties to track Transmission stations and Transmission substations that are owned by other parties to determine if any stations are within the specified distance threshold. The Drafting Team clarified that there is no need to coordinate with another entity; rather, the Transmission Owner (TO) may use "common public access tools" to identify proximate Transmission stations and Transmission substations. While the use of such tools (*e.g.*, GIS data) may alleviate coordination burdens, it introduces new burdens on TOs to manually review each and every applicable Transmission station and Transmission substation for nearby stations. Oncor has three additional concerns that should be noted related to the use of GIS data:

· GIS data for an area can be low resolution, limited, or entirely unavailable.

· Another complication that could arise is that TOs may unknowingly use GIS data that is out-of-date and no longer representative of the subject area. For example, if a TO used the most recent imagery available from Google Earth to perform its review of an area in 2025, and that imagery was created in 2023, then that imagery would not include any nearby Transmission stations that were built in 2024. Then the TO's review performed in 2025 would not include any proximate stations built in 2024.

· Even if a TO uses current year GIS data in an effort to identify proximate Transmission stations and Transmission substations, this still would not allow the TO to identify planned but not completed proximate stations. For example, a TO could use GIS data to identify proximate stations in 2025, but if in 2026 a new proximate station was built, then the proximate station built in 2026 would not be accounted for in the 2025 review.

Likes 0	
Dislikes 0	

Response

Wesley Maurer - Lower Colorado River Authority - 1 - Texas RE

Answer	No
Document Name	

Comment

We do not agree with the changes to R2 as currently written. The use of the term "identify" is unclear, it's not obvious whether this requires documentation or ongoing tracking. There's also no voltage threshold provided, adding a voltage threshold could provide more clarity and keep from including stations that aren't relevant from a security perspective. It is also uncertain what is expected once these substations are identified, particularly if they are owned by another entity.

Likes 0	
Dislikes 0	

Response

Gail Elliott - Gail Elliott On Behalf of: Michael Moltane, International Transmission Company Holdings Corporation, 1; - Gail Elliott

Answer	No

Document Name	
Comment	

ITC supports the distance of 1500 feet or 457 meters (the shortest distance, measured substation fence line to substation fence line) selected by the drafting team for proximate Transmission station(s) and Transmission substation(s). However, we are concerned Transmission stations and Transmission substations owned by other entities who CIP-014 may or may not be applicable cannot be compelled to provide the information necessary for entities to comply with CIP-014. Further, while GIS tools can identify stations and substations within the specified proximity, it can be difficult to determine whose station they might be and if they are Transmission station(s) or Transmission substation(s)

ITC suggests narrowing the scope to existing BES Transmission station(s) and BES Transmission substation(s) which are owned by the applicable entity.

R2. Each Transmission Owner shall identify proximate **BES** Transmission station(s) and **BES** Transmission substation(s), owned by the applicable TO, within 1500 feet or 457 meters (the shortest distance, measured substation fence line to substation fence line) of an applicable Transmission station or Transmission substation identified in Requirement R1. [Violation Risk Factor: Medium; Time-Horizon: Long-term Planning]

ITC asks the drafting team to consider adding content to the technical rationale describing ways that an entity can be confident of to demonstrate compliance that are not cost prohibitive for companies with facilities in numerous states. Concern is identifying stations not owned by the TO.

Likes 0	
Dislikes 0	
Response	

Joseph Scott - Lower Colorado River Authority - 5

Answer	No
Document Name	
Comment	

We do not agree with the changes to R2 as currently written. The use of the term “identify” is unclear, it’s not obvious whether this requires documentation or ongoing tracking. There’s also no voltage threshold provided, adding a voltage threshold could provide more clarity and keep from including stations that aren’t relevant from a security perspective. It is also uncertain what is expected once these substations are identified, particularly if they are owned by another entity.

Likes 0	
Dislikes 0	
Response	

Kristine Martz - Edison Electric Institute - NA - Not Applicable - NA - Not Applicable

Answer	No
Document Name	
Comment	

EEI supports the distance of 1500 feet or 457 meters (the shortest distance, measured substation fence line to substation fence line) selected by the drafting team for proximate Transmission station(s) and Transmission substation(s). However, we are concerned Transmission stations and Transmission substations owned by non-registered entities are not compelled to provide the information necessary for entities to comply with CIP-014. Further, while GIS tools can identify stations and substations within the specified proximity, it can be difficult to determine if they are Transmission station(s) or Transmission substation(s).

EEI suggests narrowing the scope to BES Transmission station(s) and BES Transmission substation(s) which are owned by registered entities who would be compelled to share CIP-014 related information.

R2. Each Transmission Owner shall identify proximate **BES** Transmission station(s) and **BES** Transmission substation(s), irrespective of ownership, within 1500 feet or 457 meters (the shortest distance, measured substation fence line to substation fence line) of an applicable Transmission station or Transmission substation identified in Requirement R1. [Violation Risk Factor: Medium; Time-Horizon: Long-term Planning]

EEI asks the drafting team to consider adding content to the technical rationale describing ways that an entity may choose to accurately measure distances and demonstrate compliance. For instance, Google Earth measurements, leveraging internal personnel, hiring a surveying company etc.

Likes 0	
Dislikes 0	

Response

Hillary Creurer - Allete - Minnesota Power, Inc. - 1

Answer	No
Document Name	

Comment

Minnesota Power supports EEI’s comments.

Likes 0	
Dislikes 0	

Response

Selene Willis - Edison International - Southern California Edison Company - 5

Answer	No
Document Name	

Comment

"Please see EEI Comments"

Likes 0	
Dislikes 0	

Response	
Ruida Shu - Northeast Power Coordinating Council - 10, Group Name NPCC RSC	
Answer	No
Document Name	
Comment	
The use of the word “proximate” appears to imply an estimation and leaves the determination of what constitutes a nearby Transmission Substation or Station to the discretion of the entity. However, the requirement specifies a precise distance and a method for measuring that distance. NPCC RSC recommends removing the word “proximate.” NPCC RSC also recommends modifying Requirement R2 to read: “Transmission station(s) and Transmission substation(s) identified in CIP-002.” If the intent is to conduct a separate process or analysis to identify applicable assets, that assessment should be performed under CIP-002.	
Likes 0	
Dislikes 0	
Response	
Rebika Yitna - Rebika Yitna On Behalf of: Roger Brand, MEAG Power, 3, 1; - Rebika Yitna	
Answer	No
Document Name	
Comment	
Consider putting back the "line of sight" and "ease of access" language since physical attacks or the likelihood of physical attacks could be evaluated based on how easily accessible (physically) stations are to one another.	
Likes 0	
Dislikes 0	
Response	
Michelle Pagano - Con Ed - Consolidated Edison Co. of New York - 5	
Answer	No
Document Name	
Comment	

We do not agree with using proximity as the only triggering factor for this requirement. An entity (particularly urban utilities) may have transmission stations within 1,500 feet of each other but due to their design (i.e., Open Air vs. Enclosed) the impact of a possible physical attack can be mitigated. It would be impossible to have simultaneous faults at the applicable and proximate station under those circumstances. An example of a revised R2:

R2: Each Transmission Owner shall identify proximate open-air Transmission station(s) and Transmission substation(s), irrespective of ownership, within 1500 feet or 457 meters (the shortest distance, measured substation fence line to substation fence line) of an applicable Transmission station or Transmission substation identified in Requirement R1

Additionally, the technical rationale does not include the name or a link to the study that was the basis for this modified requirement; knowing what specific reliability concerns this modified requirement was intended to mitigate would be helpful.

Likes 0	
Dislikes 0	

Response

Zahid Qayyum - New York Power Authority - 5

Answer	No
Document Name	

Comment

NYPA supports NPCC RSC comments.

Likes 0	
Dislikes 0	

Response

Jamison Cawley - Nebraska Public Power District - 1

Answer	No
Document Name	

Comment

We disagree with the 1,500 feet requirement as there is no clear definition of the initiating disturbance. The initiating event could be anything from gunshots up to a “smoking crater” scenario and the impacts to adjacent substations could range from minimal or moderate damage to severe damage, all of which are undefined in this standard. The Physical Security standard was proposed to enhance the physical security at critical BES substations, but there are no enhanced physical security defense mechanisms which can protect a substation from a missile attack which is the only feasible way to result in a “Smoking Crater” scenario at multiple substations. So, the attack scenarios need to be plausible so that realistic physical security enhancements can be deployed to facilitate improvements in the security posture at critical BES substations. The “Smoking Crater” scenario is not plausible and thus the 1,500 feet impact zone is not justified. Assuming a simultaneous 3-Phase fault on every element in a large substation along with each and every element of an adjacent substation within 1,500 feet cannot be technically justified and therefore cannot be a requirement for the risk

assessment. Experienced TOs know through prior disturbance analysis events, that 3-phase faults are rare at a single point in the entire transmission system, so they should not be assumed to occur at one exact point in time on multiple elements at multiple substations covering large distances.

Likes 1	Nebraska Public Power District, 5, Bender Ronald
Dislikes 0	

Response

Timothy Singh - Timothy Singh On Behalf of: Israel Perez, Salt River Project, 3, 6, 5, 1; Laura Somak, Salt River Project, 3, 6, 5, 1; Mathew Weber, Salt River Project, 3, 6, 5, 1; Matthew Jaramilla, Salt River Project, 3, 6, 5, 1; - Timothy Singh

Answer	No
Document Name	

Comment

SRP recommends establishing clearer criteria for determining station applicability. As currently written, the requirement is open to interpretation, specifically regarding which voltage levels and which stations are included under the phrase " of any applicable Transmission station." To avoid ambiguity, we recommend clarifying section 4 or specifying that Requirement R2 applies only to Transmission stations or Transmission substations identified by the Transmission Owner through the risk assessment process described in Requirement R1, in accordance with the Applicability criteria outlined in Attachment 1.

Likes 0	
Dislikes 0	

Response

Alan Kloster - Alan Kloster On Behalf of: Jeremy Harris, Evergy, 3, 5, 1, 6; Kevin Frick, Evergy, 3, 5, 1, 6; Marcus Moor, Evergy, 3, 5, 1, 6; Tiffany Lake, Evergy, 3, 5, 1, 6; - Alan Kloster

Answer	No
Document Name	

Comment

Evergy supports and incorporates by reference the comments of the Edison Electric Institute for question #2.

Likes 0	
Dislikes 0	

Response

Lincoln Burton - Con Ed - Consolidated Edison Co. of New York - 3

Answer	No
Document Name	

Comment
We do not agree with using proximity as the only triggering factor for this requirement. An entity (particularly urban utilities) may have transmission stations within 1,500 feet of each other but due to their design (i.e., Open Air vs. Enclosed) the impact of a possible physical attack can be mitigated. It would be impossible to have simultaneous faults at the applicable and proximate station under those circumstances. An example of a revised R2: R2: Each Transmission Owner shall identify proximate open-air Transmission station(s) and Transmission substation(s), irrespective of ownership, within 1500 feet or 457 meters (the shortest distance, measured substation fence line to substation fence line) of an applicable Transmission station or Transmission substation identified in Requirement R1 Additionally, the technical rationale does not include the name or a link to the study that was the basis for this modified requirement; knowing what specific reliability concerns this modified requirement was intended to mitigate would be helpful.

Likes 0	
Dislikes 0	

Response

Chantal Mazza - Chantal Mazza On Behalf of: Junji Yamaguchi, Hydro-Quebec (HQ), 1, 5; Nicolas Turcotte, Hydro-Quebec (HQ), 1, 5; - Chantal Mazza	
Answer	No
Document Name	

Comment
The use of the word “proximate” appears to imply an estimation and leaves the determination of what constitutes a nearby Transmission Substation or Station to the discretion of the entity. However, the requirement specifies a precise distance and a method for measuring that distance. NPCC RSC recommends removing the word “proximate.” NPCC RSC also recommends modifying Requirement R2 to read: “Transmission station(s) and Transmission substation(s) identified in CIP-002.” If the intent is to conduct a separate process or analysis to identify applicable assets, that assessment should be performed under CIP-002.

Likes 0	
Dislikes 0	

Response

Jason Chandler - Con Ed - Consolidated Edison Co. of New York - 6	
Answer	No
Document Name	

Comment

We do not agree with using proximity as the only triggering factor for this requirement. An entity (particularly urban utilities) may have transmission stations within 1,500 feet of each other but due to their design (i.e., Open Air vs. Enclosed) the impact of a possible physical attack can be mitigated. It would be impossible to have simultaneous faults at the applicable and proximate station under those circumstances.

An example of a revised R2:

R2: Each Transmission Owner shall identify proximate open-air Transmission station(s) and Transmission substation(s), irrespective of ownership, within 1500 feet or 457 meters (the shortest distance, measured substation fence line to substation fence line) of an applicable Transmission station or Transmission substation identified in Requirement R1

Additionally, the technical rationale does not include the name or a link to the study that was the basis for this modified requirement; knowing what specific reliability concerns this modified requirement was intended to mitigate would be helpful.

Likes 0	
Dislikes 0	

Response

Steven Belle - Dominion - Dominion Virginia Power - 1

Answer	No
Document Name	

Comment

Clarification is needed that adjacent stations only refers to BES stations. Additionally, the 1500ft distance is unnecessarily perscriptive and should be provided only as guidance. Each entity's physical security experts, in concert with 3rd party evaluators, should have latitude to determine the apporpriate distance to consider givent the unique characteristics and vulnerabilities of each site under evalution.

Likes 0	
Dislikes 0	

Response

Dermot Smyth - Con Ed - Consolidated Edison Co. of New York - 1, Group Name Con Edison

Answer	No
Document Name	

Comment

We do not agree with using proximity as the only triggering factor for this requirement. An entity (particularly urban utilities) may have transmission stations within 1,500 feet of each other but due to their design (i.e., Open Air vs. Enclosed) the impact of a possible physical attack can be mitigated. It would be impossible to have simultaneous faults at the applicable and proximate station under those circumstances. An example of a revised R2:
R2: Each Transmission Owner shall identify proximate open-air Transmission station(s) and Transmission substation(s), irrespective of ownership,

within 1500 feet or 457 meters (the shortest distance, measured substation fence line to substation fence line) of an applicable Transmission station or Transmission substation identified in Requirement R1
Additionally, the technical rationale does not include the name or a link to the study that was the basis for this modified requirement; knowing what specific reliability concerns this modified requirement was intended to mitigate would be helpful.

Likes 0	
Dislikes 0	

Response

Matt Carden - Southern Company - Southern Company Services, Inc. - 1

Answer	No
Document Name	

Comment

Southern Company proposes the language below for added flexibility and recognition of risk mitigations similar to the flexibility proposed in Draft 2 that Southern Company agreed with and voted yes.

R2. Each Transmission Owner shall identify proximate Transmission station(s) and Transmission substation(s), irrespective of ownership

2.1 Transmission station(s) and Transmission substation(s) within 500 feet or 152 meters (the shortest distance, measured substation fence line to substation fence line) of an applicable Transmission station or Transmission substation identified in Requirement R1

or:

2.2 Transmission station(s) and Transmission substation(s) between 500 feet or 152 meters and 1500 feet or 457 meters with line of sight from a single location without obstruction of an applicable Transmission station or Transmission substation identified in Requirement R1

or:

2.3 Transmission station(s) and Transmission substation(s) between 500 feet or 152 meters and 1500 feet or 457 meters with ease of access from a common roadway that exists between an applicable Transmission station or Transmission substation identified in Requirement R1

Likes 0	
Dislikes 0	

Response

Misty Carneal - Duke Energy - 1,3,5,6 - Texas RE,SERC,RF	
Answer	No
Document Name	
Comment	

Duke Energy supports EEI comments that suggest further clarifying the scope to BES Transmission station(s) and BES Transmission substation(s) which are owned by registered entities.

Duke Energy recommends the following:

R2. Each Transmission Owner shall identify proximate **BES** Transmission station(s) and **BES** Transmission substation(s), irrespective of ownership, within 1500 feet or 457 meters (the shortest distance, measured substation fence line to substation fence line) of an applicable Transmission station or Transmission substation identified in Requirement R1. [Violation Risk Factor: Medium; Time-Horizon: Long-term Planning]

Likes 0	
Dislikes 0	
Response	

Jodi Yeary - AEP - 3	
Answer	No
Document Name	
Comment	

AEP is supportive of the modifications. However, specifying fence line to fence line is too prescriptive. Many utilities already have systems of record for station coordinates/addresses that are currently or can be used for distance calculations that are not based on fence boundaries. This prescriptive boundary language adds unnecessary compliance burden and possibly requires TOs to create and maintain a new system of record. AEP's preference is to leave boundary definitions to the TOs discretion as long as their methodology for distance calculation is documented.

Likes 0	
Dislikes 0	
Response	

Josh Schumacher - Black Hills Corporation - 6, Group Name Black Hills Corporation Segments 1, 3, 5, 6	
Answer	No
Document Name	
Comment	

Black Hills Corporation agrees with EEI regarding the new requirements in R2. We support the distance of 1500 feet measured between the closest sections of substation fencing. However, we have concerns about non-registered entities not being compelled to provide information necessary for registered entities to comply with CIP-014-4. Black Hills Corporation agrees with EEI's recommendation of adding the 'BES' verbiage to Transmission

station and Transmission substation to reduce the scope to entities who would be compelled to comply with CIP-014-4. We also agree with the suggestion to add acceptable ways to measure the distance between substations into the technical rationale for clarity.

Likes 0	
Dislikes 0	

Response

Isidoro Behar - Long Island Power Authority - 1

Answer	No
Document Name	

Comment

PSEG Long Island Agrees with the majority of changes provided to R2, including the fence line to fence line criteria, revision to distance (1500ft, and removal of criteria previously in 2.1 and 2.2.

One improvement would be to include language, to prevent ambiguity of responsibility. Suggested change: "***Each Transmission owner with applicable Transmission station(s) and Transmission substation(s) identified in Requirement R1 shall***…..". This language aims to prevent adjacent transmission owners whose facilities do not meet the criteria identified in R1 from speculating about the proximate facilities, and future projects, of adjacent transmission owners. It's reasonable that the TO's facility who meets the criteria under R1 could identify electrical transmission facilities within the 1500ft distance outlined in R2.

Likes 0	
Dislikes 0	

Response

Bob Cardle - Bob Cardle On Behalf of: Marco Rios, Pacific Gas and Electric Company, 3, 1, 5; Sandra Ellis, Pacific Gas and Electric Company, 3, 1, 5; Tyler Brun, Pacific Gas and Electric Company, 3, 1, 5; - Bob Cardle

Answer	No
Document Name	

Comment

1) PGAE does not agree with the language of "irrespective of ownership". PGAE does not have authority to evaluate other entities facilities and potentially create a document of record that other entities could be held accountable. Also, PGAE does not want a compliance obligation tied to an entity that we have to authority over.

2) Reviewing the bomb threat standoff card, the reference to 1700 feet of standoff appears to be a reference to the mandatory evacuation distance for a 40 foot Semi-Truck trailer filled with 60,000 pounds of explosives. PGAE does not agree that Vehicle-Borne Improvised Explosive Device (VBIED) are a prevalent enough attack vector that private utilities should be required to protect against them. There are far greater immediate threats.

3) "Proximate Station" Screen-1500 ft Fence-to-Fence Criterion (R2) - The new requirement to list any transmission station located within 1500 ft of a candidate facility acknowledges the risk of multi station, single attack scenarios, yet the fixed distance appears arbitrary. To prevent over or under inclusion, especially in dense urban corridors, PGAE recommends that NERC cite the threat analysis that produced the 1500 ft requirement and allow

entities to justify an alternative distance if a quantified risk assessment shows equivalent or better coverage. This added clarity will reduce regional interpretation disputes and avoid unnecessary modelling effort. This requirement also presents substantial implementation challenges related to inter-utility coordination. Assessing the physical security implications of an attack on a neighboring utility's substation, particularly when there is no existing joint ownership or operational agreement, will necessitate new formal data-sharing protocols and coordination mechanisms. This could lead to administrative complexities, delays in risk assessments, and potential disputes over sensitive information sharing. We urge NERC to provide specific guidance or a recommended template for inter-utility agreements to facilitate this critical coordination.

Likes 0	
Dislikes 0	

Response

David Melanson - NB Power Corporation - New Brunswick Power Transmission Corporation - 5

Answer	No
Document Name	

Comment

NB Power supports NPCCs comments:

"The use of the word “proximate” appears to imply an estimation and leaves the determination of what constitutes a nearby Transmission Substation or Station to the discretion of the entity. However, the requirement specifies a precise distance and a method for measuring that distance. NPCC RSC recommends removing the word “proximate.”
NPCC RSC also recommends modifying Requirement R2 to read:
“Transmission station(s) and Transmission substation(s) identified in CIP-002.”
If the intent is to conduct a separate process or analysis to identify applicable assets, that assessment should be performed under CIP-002."

Likes 0	
Dislikes 0	

Response

Mark Garza - FirstEnergy - FirstEnergy Corporation - 4, Group Name FE Voter

Answer	No
Document Name	

Comment

FirstEnergy supports EEI Comments which state:

EEI supports the distance of 1500 feet or 457 meters (the shortest distance, measured substation fence line to substation fence line) selected by the drafting team for proximate Transmission station(s) and Transmission substation(s). However, we are concerned Transmission stations and Transmission substations owned by non-registered entities are not compelled to provide the information necessary for entities to comply with CIP-014.

Further, while GIS tools can identify stations and substations within the specified proximity, it can be difficult to determine if they are Transmission station(s) or Transmission substation(s).

EEI suggests narrowing the scope to BES Transmission station(s) and BES Transmission substation(s) which are owned by registered entities who would be compelled to share CIP-014 related information.

R2. Each Transmission Owner shall identify proximate **BES** Transmission station(s) and **BES** Transmission substation(s), irrespective of ownership, within 1500 feet or 457 meters (the shortest distance, measured substation fence line to substation fence line) of an applicable Transmission station or Transmission substation identified in Requirement R1. [Violation Risk Factor: Medium; Time-Horizon: Long-term Planning]

EEI asks the drafting team to consider adding content to the technical rationale describing ways that an entity may choose to accurately measure distances and demonstrate compliance. For instance, Google Earth measurements, leveraging internal personnel, hiring a surveying company etc.

Likes 0	
Dislikes 0	

Response

Randy Peters - Manitoba Hydro - 1,3,5,6 - MRO

Answer	No
Document Name	

Comment

The technical rationale is not clear for defining the hard limit of 1500 feet as the shortest distance between two substations based on the information presented in a reference guide developed to protect people from a bomb threat, as this is not the only possible hazard addressed by CIP-014. After further review Manitoba Hydro believes the previous criteria in draft-2 are very clear and provide some flexibility for TOs to develop their own proximity criteria.

Such guidelines developed by America's Cyber Defense Agency can be referenced as guideline documents by entities when developing their criteria, but it is not recommended to bring those recommendations into a NERC standard as hard limits. If the SDT believed there was a reliability gap or a risk in the CIP-014-4-draft-2 (R2), then the SDT could think about adding another sub-requirement for TOs to develop a documented criteria or include a criteria into the TO's risk assessment methodology .

Likes 0	
Dislikes 0	

Response

Andrew Smith - APS - Arizona Public Service Co. - 5

Answer	No
Document Name	

Comment

AZPS agrees with comments submitted by EEI on behalf of their members to narrow the scope of proximate Transmission station(s) or Transmission substation(s) to BES Transmission station(s) and Transmission substation(s) which are owned by registered entities. AZPS agrees with EEI comments that it would be appreciated to consider adding more detail to Measurement M2 describing intended evidence that the distance has been accurately measured.

AZPS also agrees with EEI comments that clarification on if a site is identified as part of Requirement R2 and is owned by a different company how that applies to R8-R10.

Likes 0	
Dislikes 0	

Response

Greg Sorenson - Greg Sorenson On Behalf of: Tremayne Brown, ReliabilityFirst , 10; - Greg Sorenson

Answer	No
Document Name	

Comment

Consider the addition of the 36 calendar months timeframe to this requirement to avoid confusion around when this should be completed.

Likes 0	
Dislikes 0	

Response

Donna Wood - Tri-State G and T Association, Inc. - 1

Answer	No
Document Name	

Comment

Tri-State recommends the following:

R2 should exclude Transmission stations or substations that are below 200 kV from being considered proximate Transmission stations or substations. Without this exception, the requirement 3.3.2 that faults on proximate stations be studied would result in faults on low voltage systems being studied, despite the general intention of CIP-014 to exclude low voltage stations.

R2 should permit an exception for stations or substations that are not electrically close despite physical proximity. Substations may be physically close, but not have any transmission line connecting them, such that they are functionally distant for power flow and transient stability purposes. While the substation may be damaged/removed by the same attack, they would not be impacted by each other's faults and would be cleared separately. In addition, the "proximate" substation in this circumstance will frequently be owned by another entity, such that entities will have to perform studies on systems that are entirely owned by others.

Likes 0	
Dislikes 0	

Response

Diana Aguas - CenterPoint Energy Houston Electric, LLC - 1 - Texas RE

Answer	No
Document Name	

Comment

No, CenterPoint Energy Houston Electric, LLC (CEHE) agrees with comments as submitted by the Edison Electric Institute (EEI).

Likes 0	
Dislikes 0	

Response

Tamarra Hardie - Public Utility District No. 1 of Chelan County - 6, Group Name CHPD

Answer	No
Document Name	

Comment

The rationale for the 1500 feet requirement refers to the DHS-DOJ Bomb Threat Stand-off Card for semi-trailier type threats as justification for including this number in R2. However, the distances on the Stand-off Card are related to the mandated personnel evacuation distances for a variety of bomb threats, not necessarily damage distances for these threats. For instance, it would be recommended to use a number that is based upon historical and/or technical research for damage distance of semi-trailer type bomb threats rather than the guidance for safe personnel evacuation distance when considering which stations may be impacted by a bombing event.

Additionally, the measurement from substation fence line to substation fence line can present some unrealistic distance scenarios for CIP-014 assessments, especially for substations that share a fence line with another substation and are located within 1500 feet of a third station. There are situations under these conditions where equipment distances may far exceed 1500 feet, which is already a distance determined by evacuation mandates and not by technically-supported damage distances. For instance, a substation may have a large fenced area with power equipment positioned within the fence perimeter in such a way that distances may far exceed 1500 feet from the proposed event blast location to adjacent “proximate” facilities but would still need to be assessed based upon the proposed R2 draft 3 language.

It is recommended to modify this language to be less prescriptive with this distance requirement and instead allow utilities to either:

- Use the provided R2 distance, whether that is the current revision’s 1500 foot requirement or a distance based upon damage distances (Note: It is preferable the distance number be based upon technically-supported damage distances rather than mandatory evacuation distances, as mentioned above.)

OR

- Allow utilities to select their own distance for identifying proximate stations but require utilities to provide rationale within their CIP-014 methodologies and/or assessments for why they selected a different distance threshold or excluded proximate stations from identification.

It is requested that NERC provide additional guidance or DHS/DOJ/CISA resources for damage distances of various bomb threat types in a similar fashion to the stand-off card for evacuation distances. This would allow R2 to address the intent of the SAR by requiring utilities to assess semi-trailer type bomb threats to their power systems while also provide additional assessment flexibility and avoiding additional compliance assessment burden for unreasonable scenarios.

Likes 0	
Dislikes 0	

Response

Jeffrey Streifling - NB Power Corporation - 1

Answer	No
Document Name	

Comment

The use of the word “Proximate” seem to intend an estimation and is at the discretion of the entity of what is a close Transmission Substation or Station. Then the requirement states a specific distance and a way to measure that distance. TFIST suggest removing the word “Proximate”.

Likes 0	
Dislikes 0	

Response

Melanie Wong - Seminole Electric Cooperative, Inc. - 5

Answer	No
Document Name	

Comment

Likes 0	
Dislikes 0	

Response

Kennedy Meier - Electric Reliability Council of Texas, Inc. - 2

Answer	Yes

Document Name	
Comment	
ERCOT joins the comments submitted by the IRC SRC and adopts them as its own.	
Likes 0	
Dislikes 0	
Response	
Jennie Wike - Jennie Wike On Behalf of: John Merrell, Tacoma Public Utilities (Tacoma, WA), 1, 4, 5, 6, 3; - Jennie Wike, Group Name Tacoma Power	
Answer	Yes
Document Name	
Comment	
Tacoma Power supports the specific distance of 1500 feet specified in R2. Typically values specified in dual units are listed as “1500 feet (457 meters)” rather than “1500 feet or 457 meters”. If possible, Tacoma Power recommends adjusting the overall structure of R2 to format the distance measurements with meters in parenthesis rather than as an or statement.	
Likes 0	
Dislikes 0	
Response	
Monika Montez - California ISO - 2 - WECC, Group Name ISO/RTO Council Standards Review Committee (SRC)	
Answer	Yes
Document Name	
Comment	
The ISO/RTO Council (IRC) Standards Review Committee (SRC) recommends that the drafting team should account for the fact that the Transmission Owner might be the only entity that has the information needed to determine which Transmission stations or substations are within 1500 feet or 457 meters of an applicable Transmission station or substation under Requirement R2. Consequently, entities performing unaffiliated third-party verifications under Requirement R6 may not be able to verify that a Transmission Owner has properly identified all Transmission stations or Transmission substations within 1500 feet or 457 meters of applicable stations or substations identified under Requirement R1. As a result, these unaffiliated third parties may need to rely on data provided by the TO when no other data is available, which could undermine the usefulness of unaffiliated third-party verifications.	
Likes 0	
Dislikes 0	
Response	

Kelley Sargent - Puget Sound Energy, Inc. - 3	
Answer	Yes
Document Name	
Comment	
Although the requirement for proximity is simplified from past versions, it is missing the possibility of 2 non-applicable stations (ex. each station with 3-230 kV lines) that if considered proximate (within 1500 feet), may together meet the Applicability criteria. Such a station pair would be missed out from CIP-14-4 requirement R2, as stated currently. Is this an acceptable risk to the interconnection?	
Likes 0	
Dislikes 0	
Response	
Carver Powers - Utility Services, Inc. - 4	
Answer	Yes
Document Name	
Comment	
1. Requesting clarification on the proposed capitalized term “Transmission”. This is not defined by NERC. USV suggests utilizing the term BES transmission stations and BES transmission substations. 2. USV suggest removing the term “proximate” as it does not provide clarity to the requirement. The proposed language states a specific distance and the term proximate does not align due to it suggesting an estimate or approximate value.	
Likes 0	
Dislikes 0	
Response	
Dan Perry - TXNM Energy - 1,3,5 - WECC,Texas RE	
Answer	Yes
Document Name	
Comment	
TXNM Energy agress with EEI comments	
Likes 0	
Dislikes 0	

Response	
Richard Vendetti - NextEra Energy - 5	
Answer	Yes
Document Name	
Comment	
Nextera agrees with modifications made in CIP-04-4, R2	
Likes 0	
Dislikes 0	
Response	
Ben Hammer - Western Area Power Administration - 1	
Answer	Yes
Document Name	
Comment	
Bright line criteria for proximate distance is appreciated, however, consider defining proximate distances in either feet or meters only.	
Likes 0	
Dislikes 0	
Response	
Amy Wilke - American Transmission Company, LLC - 1	
Answer	Yes
Document Name	
Comment	
ATC agrees with MRO NSRF comments.	
Likes 0	
Dislikes 0	
Response	

Thomas Breen - Berkshire Hathaway Energy - MidAmerican Energy Co. - 1	
Answer	Yes
Document Name	
Comment	
Support the comments from the MRO NSRF.	
Likes 0	
Dislikes 0	
Response	
Jessica Cordero - Unisource - Tucson Electric Power Co. - 1	
Answer	Yes
Document Name	
Comment	
TEPC agrees with EEI's comments.	
Likes 0	
Dislikes 0	
Response	
Amy Key - Berkshire Hathaway Energy - MidAmerican Energy Co. - 3	
Answer	Yes
Document Name	
Comment	
MEC supports the comments of the MRO NSRF	
Likes 0	
Dislikes 0	
Response	
Anna Martinson - MRO - 1,2,3,4,5,6 - MRO, Group Name MRO Group	

Answer	Yes
Document Name	
Comment	
MRO NSRF thanks the DT for providing the bright line criteria for proximate distance, for further reducing that distance to 1500 ft. with U.S. government justification for that distance, and eliminating the problematic line-of-sight and common roadway considerations	
Likes 0	
Dislikes 0	
Response	
Daniel Gacek - Exelon - 1, Group Name Exelon	
Answer	Yes
Document Name	
Comment	
Likes 0	
Dislikes 0	
Response	
Elizabeth Davis - Elizabeth Davis On Behalf of: Thomas Foster, PJM Interconnection, L.L.C., 2; - Elizabeth Davis	
Answer	Yes
Document Name	
Comment	
Likes 0	
Dislikes 0	
Response	
Chris Wagner - Santee Cooper - 1, Group Name Santee Cooper	
Answer	Yes
Document Name	
Comment	

Likes 0	
Dislikes 0	
Response	
Nick Leathers - Nick Leathers On Behalf of: David Jendras Sr, Ameren - Ameren Services, 3, 6, 1; - Nick Leathers	
Answer	Yes
Document Name	
Comment	
Likes 0	
Dislikes 0	
Response	
Robert Follini - Avista - Avista Corporation - 3	
Answer	Yes
Document Name	
Comment	
Likes 0	
Dislikes 0	
Response	
Mark Flanary - Midwest Reliability Organization - 10	
Answer	Yes
Document Name	
Comment	
Likes 0	
Dislikes 0	
Response	

Rachel Coyne - Texas Reliability Entity, Inc. - 10	
Answer	Yes
Document Name	
Comment	
Likes 0	
Dislikes 0	
Response	
Wendy Kalidass - U.S. Bureau of Reclamation - 5	
Answer	Yes
Document Name	
Comment	
Likes 0	
Dislikes 0	
Response	
Dave Krueger - SERC Reliability Corporation - 10	
Answer	Yes
Document Name	
Comment	
Likes 0	
Dislikes 0	
Response	
Phillip Martinez - Phillip Martinez On Behalf of: Richard Jackson, U.S. Bureau of Reclamation, 1, 5; - U.S. Bureau of Reclamation - 1 - WECC	
Answer	Yes
Document Name	
Comment	

Likes 0	
Dislikes 0	
Response	
Brian Millard - Tennessee Valley Authority - 1,3,5,6 - SERC, Group Name TVA RBB	
Answer	Yes
Document Name	
Comment	
Likes 0	
Dislikes 0	
Response	
Nikki Carson-Marquis - Nikki Carson-Marquis On Behalf of: Theresa Allard, Minnkota Power Cooperative Inc., 1; - Nikki Carson-Marquis	
Answer	Yes
Document Name	
Comment	
Likes 0	
Dislikes 0	
Response	
Tim Kelley - Tim Kelley On Behalf of: Charles Norton, Sacramento Municipal Utility District, 3, 6, 4, 1, 5; Foung Mua, Sacramento Municipal Utility District, 3, 6, 4, 1, 5; Kevin Smith, Balancing Authority of Northern California, 1; Nicole Looney, Sacramento Municipal Utility District, 3, 6, 4, 1, 5; Ryder Couch, Sacramento Municipal Utility District, 3, 6, 4, 1, 5; Wei Shao, Sacramento Municipal Utility District, 3, 6, 4, 1, 5; - Tim Kelley, Group Name SMUD and BANC	
Answer	Yes
Document Name	
Comment	
Likes 0	
Dislikes 0	
Response	

Darko Kovac, P.E. - Gainesville Regional Utilities - 1,3,5	
Answer	Yes
Document Name	
Comment	
Likes 0	
Dislikes 0	
Response	
James Keele - Entergy - 3	
Answer	Yes
Document Name	
Comment	
Likes 0	
Dislikes 0	
Response	
Stephen Stafford - Stephen Stafford On Behalf of: Greg Davis, Georgia Transmission Corporation, 1; - Stephen Stafford	
Answer	Yes
Document Name	
Comment	
Likes 0	
Dislikes 0	
Response	
Ronald Hoover - Bonneville Power Administration - 1,3,5,6 - WECC	
Answer	Yes
Document Name	
Comment	

Likes 0	
Dislikes 0	
Response	
Kevin Conway - Western Power Pool - 4	
Answer	Yes
Document Name	
Comment	
Likes 0	
Dislikes 0	
Response	
Sean Steffensen - IDACORP - Idaho Power Company - 1	
Answer	Yes
Document Name	
Comment	
Likes 0	
Dislikes 0	
Response	
Alison Nickells - NiSource - Northern Indiana Public Service Co. - 1	
Answer	Yes
Document Name	
Comment	
Likes 0	
Dislikes 0	
Response	

Lexi Dobrzysnki - Lexi Dobrzysnki On Behalf of: Angela Dockter, Alliant Energy Corporation Services, Inc., 4; - Lexi Dobrzysnki	
Answer	
Document Name	
Comment	
Alliant Energy mirrors the MRO NSRF group Comments.	
Likes 0	
Dislikes 0	
Response	

3. Do you agree with the modifications made in CIP-014-4 with new Requirement R3 to address the issues identified in the SAR? If you do not agree, please provide your recommendation and, if appropriate, technical or procedural justification.

Alison Nickells - NiSource - Northern Indiana Public Service Co. - 1

Answer	No
Document Name	

Comment

Steady-State analysis needs to be performed only for on-peak conditions.

Likes 0	
Dislikes 0	

Response

Sean Steffensen - IDACORP - Idaho Power Company - 1

Answer	No
Document Name	

Comment

Idaho Power Company (IPC) recommends the Standard not prescribe a specific second case as a low-load scenario. Instead, IPC suggests the Standard require the second case reflect the system's worst-case conditions outside of the stresses applied in the System peak load case. This case could include scenarios that impose additional or independent stress on the system, such as varying seasonal conditions, path transfers, or different load levels. The specific nature of this case would depend on the system's topology, and system operators would be best positioned to determine what additional stresses should be considered. Additionally, IPC seeks further clarification regarding the term "proximate station" in the context of the requirement: "Faults at both the applicable and proximate Transmission station(s) or Transmission substation(s)." Specifically, IPC requests clarification on whether this requirement implies faults should be evaluated simultaneously across all proximate stations, or if each proximate station should be assessed individually in the same manner as the applicable station.

Likes 0	
Dislikes 0	

Response

Kevin Conway - Western Power Pool - 4

Answer	No
Document Name	

Comment

We believe that the loss of applicable transmission stations should extend to transmission substations identified in R2, where they may result in the physical loss of transmission substations in R1. If the association is intended by the Drafting Team, it is not apparent in how R3 is currently written.

Likes 0	
Dislikes 0	
Response	
Ronald Hoover - Bonneville Power Administration - 1,3,5,6 - WECC	
Answer	No
Document Name	
Comment	

Requirement 3 creates confusion in situations where two or more substations in close proximity have different owners or joint ownership. It is unclear which entity should apply a fault, especially if the owner identified it under R1 and another entity identified it as proximate. It should be sufficient to apply a fault at the entity's own applicable substation and then take the outage of both the applicable and proximate substations. There would be no need for duplicate fault studies, yet notifications to other entities are not required until R7 is reached.

BPA believes Transmission Owners would have difficulties obtaining and validating information required for proximate Transmission stations or substations. BPA recommends adding language to facilitate coordination among varying entities to ensure data can be received and validated.

R3.4 contains a reference to Part 3.3.2, but there is no such Part in the current redlines. This seems to result in the omission of proximate substations from R3.4, and it is unclear if this is an intentional omission.

Likes 0	
Dislikes 0	
Response	
Stephen Stafford - Stephen Stafford On Behalf of: Greg Davis, Georgia Transmission Corporation, 1; - Stephen Stafford	
Answer	No
Document Name	
Comment	

Developing steady-state and dynamic simulation criteria is a planning function and should not be required of a Transmission Owner. The sub-requirements go further into addressing what a transmission planning study should include but applies this requirement incorrectly to the Transmission owner. The intent of R3 is more appropriately applicable to the TPL body of standards. CIP-014 should reference output from a study performed in accordance with a clearly defined TPL requirement for an extreme event involving the loss of an applicable Transmission station(s) or substation(s).

Likes 0	
Dislikes 0	
Response	
Jessica Cordero - Unisource - Tucson Electric Power Co. - 1	

Answer	No
Document Name	
Comment	
TEPC agrees with EEI's comments.	
Likes 0	
Dislikes 0	
Response	
Diana Aguas - CenterPoint Energy Houston Electric, LLC - 1 - Texas RE	
Answer	No
Document Name	
Comment	
CEHE agrees with EEI's comments.	
Likes 0	
Dislikes 0	
Response	
Greg Sorenson - Greg Sorenson On Behalf of: Tremayne Brown, ReliabilityFirst , 10; - Greg Sorenson	
Answer	No
Document Name	
Comment	
3.1 - The second sentence of R3.1 appears to be deficient. There is no reasonable requirement for the thresholds (e.g., technical justifications). Further, consideration of the thresholds should only be one piece of the analysis, not all of it. R3.3.1 should also take into consideration the stability of the system before the thresholds are met. 3.4 - Consider clear indication of what kind of fault needs to be applied, i.e., a three phase to ground bolted fault or a single line to ground fault. 3.4.2 and 3.4.3 - Consider updating language that actual or more conservative clearing times shall be used and if not available, delayed (remote) clearing times are acceptable.	
Likes 0	
Dislikes 0	
Response	

Andrew Smith - APS - Arizona Public Service Co. - 5	
Answer	No
Document Name	
Comment	
AZPS agrees with comments submitted by EEI on behalf of their members that there are concerns with the requirement to specify thresholds identifying unacceptable generation and load loss within an Interconnection in Requirement R3 Part 3.1 and their recommendation to remove that language.	
Likes 0	
Dislikes 0	
Response	
Randy Peters - Manitoba Hydro - 1,3,5,6 - MRO	
Answer	No
Document Name	
Comment	
It's unclear whether the generation or load loss criteria will simply have specific MW thresholds for generation loss and load loss in the overall interconnected system, or define generation and load loss thresholds both inside and outside of a Planning Coordinator area (but within the overall Interconnection). Consideration could be given to adding a net loss criterion in cases where both generation and load are lost. When the loss of generation and load are of the same order there are typically minimal impacts on the Interconnection	
Likes 0	
Dislikes 0	
Response	
Bob Cardle - Bob Cardle On Behalf of: Marco Rios, Pacific Gas and Electric Company, 3, 1, 5; Sandra Ellis, Pacific Gas and Electric Company, 3, 1, 5; Tyler Brun, Pacific Gas and Electric Company, 3, 1, 5; - Bob Cardle	
Answer	No
Document Name	
Comment	
1) Quantifying "Unacceptable Loss" and "Conservative Clearing Time" (R3.1 &R3.4) - The phrases "unacceptable generation and load loss" in R3.1 and "actual or more conservative clearing time" in R3.4 are inherently subjective and open to regional interpretations. To promote uniform implementation, PGAE recommends that NERC establish quantitative default benchmarks for generation and load loss thresholds, and a clearing time margin. Including	

such reference values—while still allowing entities to justify alternative criteria based on system characteristics—will align CIP-014-4 with the measurable approach used in the NERC TPL standards and reduce the potential for inconsistent compliance findings across regions.

2) Clarification on R3.4- Assumption of Total Loss of Communication and Protection Systems – PGAE recommends clarifying the required assumptions for the simultaneous loss of "all communication and protection systems" in R3.4. Defining the expected modelling approach, preferably with an example one line and timing table, will allow entities to build studies that are both realistic and comparable, avoiding unnecessary burden while meeting the standard's risk reduction objectives

Likes 0	
Dislikes 0	

Response

Isidoro Behar - Long Island Power Authority - 1

Answer	No
Document Name	

Comment

Req 3.4 – This requirement states:

"*A specification that Fault simulations assume the loss of communication and Protection Systems at the applicable Transmission station(s) or Transmission substation(s) prior to or simultaneous with the Fault(s) studied under Requirement R3, Parts 3.3.1 and 3.3.2.*"

It is not clear if the loss of communications and Protection Systems would apply to the proximate station (and thus an affected entity would have to make an assumption). We request clarification that the loss of communications and Protection Systems only applies to the **applicable stations** identified based on Req #1 (and not to the proximate stations identified based on Req #2).

Question for clarification: If the loss of communications and Protection Systems does NOT apply to the proximate stations identified based on Req #2, then is it permissible to assume local high speed protection system clearing times for the fault **at the proximate station?**

Likes 0	
Dislikes 0	

Response

Josh Schumacher - Black Hills Corporation - 6, Group Name Black Hills Corporation Segments 1, 3, 5, 6

Answer	No
Document Name	

Comment

Black Hills Corporation agrees with EEI's comments about seeking clarification around the use of numbering vs bullet points in Requirement R3 Part 3.3 and Part 3.4. Generally, bullet points can be considered "OR" requirement and numbered items are treated as "AND" requirements. There are also

references to numbered items that don't exist in the current clean version of the document, for example Part 3.4 references Requirement R3 Parts 3.3.1 and 3.3.2, which do not exist in this version of the draft.

Additionally, we agree with EEI's concerns about Requirements R3 Part 3.1 and how it might create scenarios where entities must rely on another party to provide the information necessary to establish and maintain the unacceptable thresholds for generation and load loss within an Interconnection. We agree with EEI's comments to remove some language from requirement R3 Part 3.1 and include it in the technical rationale on how to establish and maintain thresholds.

Likes 0	
Dislikes 0	

Response

Jodi Yeary - AEP - 3

Answer	No
Document Name	

Comment

AEP is supportive of specifying that more than one scenario shall be studied but would like flexibility in choosing what factors are varied between scenarios.

Also the draft currently mixes subrequirements with bullets which should be corrected:

In the clean version of CIP-014-4 that is posted, there are bullet points under Requirement R3 Part 3.3 and 3.4, but Part 3.4 references Requirement R3 Parts 3.3.1 and 3.3.2, which do not exist in this draft. The Redline to Last Posted document includes a Requirement R3 Part 3.3.1 followed by a bullet point, but no Part 3.3.2. The Redline to Last Posted version also includes Requirement R4 Parts 3.4.1-3.4.3 instead of the bullet points that are in the clean version under 3.4.

Likes 0	
Dislikes 0	

Response

Brian Millard - Tennessee Valley Authority - 1,3,5,6 - SERC, Group Name TVA RBB

Answer	No
Document Name	

Comment

R3.2: TVA suggests reverting back to the prior draft of this language that is less prescriptive for what cases are more likely to contribute to instability, uncontrolled separation, or Cascading within an Interconnection.

TVA proposes revise R3.2 as follows: "Steady-state and dynamic simulations shall each be performed using:

(1) A peak-season and an off-peak season, or,

(2) Two different peak-seasons (e.g., summer and winter peak)”	
Likes 0	
Dislikes 0	
Response	
Dave Krueger - SERC Reliability Corporation - 10	
Answer	No
Document Name	
Comment	
SERC appreciates the ongoing efforts to refine the CIP-014 Risk Assessment portion of the standard. SERC believes that each Interconnection Planning Collaborative should establish the maximum generation and load loss thresholds for its respective Interconnection. Allowing each Transmission Owner to establish their own thresholds creates inconsistency for identifying which events cause instability, uncontrolled separation, or Cascading within an Interconnection. SERC believes that the use of the single word ‘Fault’, does not provide clarity and consistency in the requirement. The fault type should be stated as a 3-phase Fault to align with how Extreme events are studied in TPL-001-5.1.	
Likes 0	
Dislikes 0	
Response	
Steven Belle - Dominion - Dominion Virginia Power - 1	
Answer	No
Document Name	
Comment	
Dominion supports EEI's comments.	
Likes 0	
Dislikes 0	
Response	
Alan Kloster - Alan Kloster On Behalf of: Jeremy Harris, Evergy, 3, 5, 1, 6; Kevin Frick, Evergy, 3, 5, 1, 6; Marcus Moor, Evergy, 3, 5, 1, 6; Tiffany Lake, Evergy, 3, 5, 1, 6; - Alan Kloster	
Answer	No

Document Name	
Comment	
Evergy supports and incorporates by reference the comments of the Edison Electric Institute and MRO NSRF for question #3.	
Likes 0	
Dislikes 0	
Response	
Mark Flanary - Midwest Reliability Organization - 10	
Answer	No
Document Name	
Comment	
For R3.3, the use of the term "Fault" opens the door to the usage of less severe faults. We recommend changing "Fault" to "a Fault that will cause the most severe consequences at that substation" to ensure the most serious scenario is studied. The Standard need not specify what fault is to be used in the study, but the Entity would identify what the most serious Fault is and study that.	
Likes 0	
Dislikes 0	
Response	
Jamison Cawley - Nebraska Public Power District - 1	
Answer	No
Document Name	
Comment	
There appears to be no technical basis to support the inclusion of prior outage scenarios involving communication systems and the ability to assume simultaneous loss of the comm system with the disturbance is also an option here which introduces subjectivity to the process. Including prior outage scenarios in the Risk Assessment (RA) could include prior outages of generators, lines, transformers and other substation equipment which adds further ambiguity to the RA process. The requirement to use delayed clearing times cannot be technically justified for certain protection schemes (DCUB) and the TO should have the ability to use their extensive experience in this area versus a requirement to assume delayed clearing times.	
Likes 1	Nebraska Public Power District, 5, Bender Ronald
Dislikes 0	
Response	

Nick Leathers - Nick Leathers On Behalf of: David Jendras Sr, Ameren - Ameren Services, 3, 6, 1; - Nick Leathers	
Answer	No
Document Name	
Comment	
Ameren would like more clarity around R3.3.1 and the bulleted item beneath it. As written, it is not clear whether both items are required or if there is a choice of which item to complete. Requiring peak and off-peak cases will double the number of simulations that need to be performed.	
Likes 0	
Dislikes 0	
Response	
Selene Willis - Edison International - Southern California Edison Company - 5	
Answer	No
Document Name	
Comment	
"Please see EEI Comments"	
Likes 0	
Dislikes 0	
Response	
Chris Wagner - Santee Cooper - 1, Group Name Santee Cooper	
Answer	No
Document Name	
Comment	
Defining a fixed MW value for generation or load loss should not be required if the assessment does not conclude that it would risk instability, uncontrolled separation or Cascading. This could result in a scenario where costly additional security measures are shifted to the entity and its customers for an event that crossed the MW threshold but did not cause instability or Cascading in the assessment.	
Likes 0	
Dislikes 0	

Response

Hillary Creurer - Allete - Minnesota Power, Inc. - 1	
Answer	No
Document Name	

Comment
Minnesota Power supports EEI’s comments.

Likes 0	
Dislikes 0	

Response

Richard Vendetti - NextEra Energy - 5	
Answer	No
Document Name	

Comment
Nextera supports comments submitted by EEI: EEI appreciates the drafting team’s revisions to Requirement R3, however, Requirement R3, Part 3.1 still includes load loss and generation loss which is not required by the SAR. EEI proposes the following language: “Technically supported thresholds **methodology** and rationale for determining the amount of acceptable load loss, the amount of acceptable generation loss, post event response, and any additional considerations recognized as resulting in instability, uncontrolled separation, or Cascading within an interconnection **used in the analysis to identify System instability for conditions including Cascading, voltage instability, or uncontrolled islanding**. The technical rationale shall include:” Further, Nextera proposes an addition in R3: Perform CIP-014 assessment on both individual and group of Transmission station and substation that are in the proximity. Identify whether individual or Proximity Transmission station and Transmission substation are not meeting the Risk Assessment methodology documented in R3.

Likes 0	
Dislikes 0	

Response

Kristine Martz - Edison Electric Institute - NA - Not Applicable - NA - Not Applicable

Answer	No
Document Name	
Comment	

EEI seeks clarification on the drafting team's intention for Requirement R3 Part 3.3 and Part 3.4 sub-requirements. In the clean version of CIP-014-4 that is posted, there are bullet points under Requirement R3 Part 3.3 and 3.4, but Part 3.4 references Requirement R3 Parts 3.3.1 and 3.3.2 which do not exist in this draft. The Redline to Last Posted document includes a Requirement R3 Part 3.3.1 followed by a bullet point, but no Part 3.3.2. The Redline to Last Posted version also includes Requirement R4 Parts 3.4.1-3.4.3 instead of the bullet points that are in the clean version under 3.4. The numbers vs. bullets are important to understand because generally, numbered items are treated as "and" requirements, and bulleted lists can be interpreted as "or" requirements.

Additionally, EEI is concerned about the requirement to specify thresholds identifying unacceptable generation and load loss within an Interconnection in Requirement R3 Part 3.1. In some scenarios entities rely on another party to provide the information necessary to establish and maintain these thresholds. EEI suggests striking the sentence "The criteria shall include, at a minimum, thresholds identifying unacceptable generation and load loss within an Interconnection" from Requirement R3 Part 3.1 and including it in the technical rationale with details on how to establish and maintain the thresholds.

Likes 0	
Dislikes 0	
Response	
Joseph Scott - Lower Colorado River Authority - 5	
Answer	No
Document Name	
Comment	

We do not agree with the changes to R3 as currently written. If a proximate substation falls outside our footprint , we may not have access to the necessary data to perform a proper risk assessment or to evaluate simulation results. It may be more appropriate for this type of assessment to be handled at the regional level.

Likes 0	
Dislikes 0	
Response	
Gail Elliott - Gail Elliott On Behalf of: Michael Moltane, International Transmission Company Holdings Corporation, 1; - Gail Elliott	
Answer	No
Document Name	
Comment	

ITC seeks clarification on the drafting team's intention for Requirement R3 Part 3.3 and Part 3.4 sub-requirements. In the clean version of CIP-014-4 that is posted, there are bullet points under Requirement R3 Part 3.3 and 3.4, but Part 3.4 references Requirement R3 Parts 3.3.1 and 3.3.2 which do not exist in this draft. The Redline to Last Posted document includes a Requirement R3 Part 3.3.1 followed by a bullet point, but no Part 3.3.2. The Redline to Last Posted version also includes Requirement R4 Parts 3.4.1-3.4.3 instead of the bullet points that are in the clean version under 3.4. The numbers vs. bullets are important to understand because generally, numbered items are treated as "and" requirements, and bulleted lists can be interpreted as "or" requirements.

Likes 0	
Dislikes 0	

Response

Wesley Maurer - Lower Colorado River Authority - 1 - Texas RE

Answer	No
Document Name	

Comment

We do not agree with the changes to R3 as currently written. If a proximate substation falls outside our footprint , we may not have access to the necessary data to perform a proper risk assessment or to evaluate simulation results. It may be more appropriate for this type of assessment to be handled at the regional level.

Likes 0	
Dislikes 0	

Response

Dan Perry - TXNM Energy - 1,3,5 - WECC,Texas RE

Answer	No
Document Name	

Comment

TXNM Energy agrees with EEI comments and adds the following:

Requirement to run faults at multiple substations is challenging from a software (GE PSLF) perspective and the technical rationale for performing faults at multiple elements does not seem to have basis. Drafting Team should include more information for how this should be accomplished in the Technical Rationale.

Likes 0	
Dislikes 0	

Response

Kelley Sargent - Puget Sound Energy, Inc. - 3	
Answer	No
Document Name	
Comment	
3.1 Thresholds for Unacceptable load or generation loss within an interconnection: It will be helpful if WECC provides thresholds for unacceptable load loss and generation loss that may impact the interconnection. Lack of specific criteria from WECC will lead to inconsistency in CIP-14 assessment methodology among members. 3.3 It will be helpful if standard can clarify if the fault is 3 Phase or single phase. 3.4.2 & 3.4.3 Clearing times: It is not clear if Delayed (remote) clearing times or Actual (more conservative) clearing times shall be used. Does the standard allow both? The technical rationale document for CIP 14-4 (pg. 4) seems to indicate that actual or more conservative clearing times are required. If so, 3.4.2 should be removed.	
Likes 0	
Dislikes 0	
Response	

Elizabeth Davis - Elizabeth Davis On Behalf of: Thomas Foster, PJM Interconnection, L.L.C., 2; - Elizabeth Davis	
Answer	No
Document Name	
Comment	
PJM requests language indicating all voltage levels be included in R3 or R3 subrequirements (where the Drafting Team finds the best fit).	
Likes 0	
Dislikes 0	
Response	

Robert Blackney - Edison International - Southern California Edison Company - 1	
Answer	No
Document Name	
Comment	
See comments submitted by Edison Electric Institute.	
Likes 0	

Dislikes 0	

Response

Emma Halilovic - Hydro One Networks, Inc. - 1	
Answer	No
Document Name	2023-06 Draft_3_Comment_Form.docx

Comment
See attached for recommendations and rationales.

Likes 0	
Dislikes 0	

Response

Jennie Wike - Jennie Wike On Behalf of: John Merrell, Tacoma Public Utilities (Tacoma, WA), 1, 4, 5, 6, 3; - Jennie Wike, Group Name Tacoma Power	
Answer	No
Document Name	

Comment
Tacoma Power is concerned with using bullets for the sub-items in R3.3. Instead of using bullets, these sub-items should be numbered as 3.3.1 and 3.3.2 to ensure that both are required. Bullets are used to indicate an “or” relationship. Additionally, the language in the lead-in statement of R3 should be revised to include proximate stations and substations to ensure it’s clear that both should be considered. Proposed revision to R3: “R3. Each Transmission Owner shall have a documented risk assessment methodology for evaluating the loss of each applicable Transmission station or Transmission substation identified in Requirement R1, **and any associated proximate Transmissions stations or Transmission substations identified in Requirement R2**. The methodology shall include, at a minimum, the following: 3.3. A specification for Fault simulations, including: **3.3.1.** For each applicable Transmission station or Transmission substation listed in accordance with Requirement R1, a Fault at the applicable Transmission station or Transmission substation. **3.3.2.** For each Transmission station or Transmission substation determined in accordance with Requirement R2 as being in proximity to an applicable Transmission station or Transmission substation, Faults at both the applicable and proximate Transmission station(s) or Transmission substation(s).” Tacoma Power recommends swapping the order of R3 and R4. The Requirement R4 actions should occur prior to documenting the methodology. Also, there’s an inconsistency between the CIP-014-4 clean version and redline files. The redline to last approved file shows 3.3.1 and 3.3.2 instead of bullets. The redline to last posted file shows 3.3.1 and a bullet. The clean version has only bullets under R3.3.

Likes 0	
Dislikes 0	
Response	
Melanie Wong - Seminole Electric Cooperative, Inc. - 5	
Answer	No
Document Name	
Comment	
Likes 0	
Dislikes 0	
Response	
Anna Martinson - MRO - 1,2,3,4,5,6 - MRO, Group Name MRO Group	
Answer	Yes
Document Name	
Comment	
MRO NSRF recommends reinstating the option to use more conservative estimates vs. actual clearing times in the last bullet of R3.4. If an Entity wishes to use conservative estimates of clearing times rather than calculate every actual clearing time, an auditor can sample and ask for justification. If the actual clearing time is found to be longer than the estimate the auditor would ask for the study to be re-run with the actual clearing time, which may or may not change whether a Transmission station or substation is identified. Registered Entities should have the latitude to use engineering judgement where they think it is warranted. More importantly, if a conservative estimate of clearing times results in the study identifying a Transmission station or substation, there is no need to re-run the study with actual clearing times. This could save system protection personnel significant time and effort calculating unneeded actual clearing times	
Likes 0	
Dislikes 0	
Response	
Amy Key - Berkshire Hathaway Energy - MidAmerican Energy Co. - 3	
Answer	Yes
Document Name	
Comment	

MEC supports the comments of the MRO NSRF	
Likes 0	
Dislikes 0	
Response	
Thomas Breen - Berkshire Hathaway Energy - MidAmerican Energy Co. - 1	
Answer	Yes
Document Name	
Comment	
Support the comments of the MRO NSRF.	
Likes 0	
Dislikes 0	
Response	
Amy Wilke - American Transmission Company, LLC - 1	
Answer	Yes
Document Name	
Comment	
ATC agrees with MRO NSRF comments.	
Likes 0	
Dislikes 0	
Response	
Mark Garza - FirstEnergy - FirstEnergy Corporation - 4, Group Name FE Voter	
Answer	Yes
Document Name	
Comment	
FirstEnergy agrees with the modifications made to Requirement R3	

Likes 0	
Dislikes 0	
Response	
Misty Carneal - Duke Energy - 1,3,5,6 - Texas RE,SERC,RF	
Answer	Yes
Document Name	
Comment	
Duke Energy agrees with the modifications to R3.	
Likes 0	
Dislikes 0	
Response	
Matt Carden - Southern Company - Southern Company Services, Inc. - 1	
Answer	Yes
Document Name	
Comment	
Southern Company agrees with the modifications made in CIP-014-4 Requirement R3. For clarity, we recommend the language in the second bullet point for Requirement R3.4 to state "**either** prior to or simultaneous with the Fault(s)…"	
Likes 0	
Dislikes 0	
Response	
Timothy Singh - Timothy Singh On Behalf of: Israel Perez, Salt River Project, 3, 6, 5, 1; Laura Somak, Salt River Project, 3, 6, 5, 1; Mathew Weber, Salt River Project, 3, 6, 5, 1; Matthew Jaramilla, Salt River Project, 3, 6, 5, 1; - Timothy Singh	
Answer	Yes
Document Name	
Comment	
SRP agrees with Requirment R3 by introducing a structured methodology for risk assessment.	
Likes 0	

Dislikes 0	

Response

Ben Hammer - Western Area Power Administration - 1	
Answer	Yes
Document Name	

Comment
There is a typo in Requirement R3 bullet points being used in R3.4 rather than R3.3.1 and R3.3.2 (redline and clean versions look different. Also, recommend reinstating the option to use more conservative estimates vs. actual clearing times in the last bullet of R3.4. If an Entity wishes to use conservative estimates of clearing times rather than calculate every actual clearing time, an auditor can sample and ask for justification. If the actual clearing time is found to be longer than the estimate the auditor would ask for the study to be re-run with the actual clearing time, which may or may not change whether a Transmission station or substation is identified. Registered Entities should have the latitude to use engineering judgement where they think it is warranted. More importantly, if a conservative estimate of clearing times results in the study identifying a Transmission station or substation, there is no need to re-run the study with actual clearing times. This could save system protection personnel significant time and effort calculating unneeded actual clearing times.

Likes 0	
Dislikes 0	

Response

Carver Powers - Utility Services, Inc. - 4	
Answer	Yes
Document Name	

Comment
Was the intent to have the responsible entity establish their own “unacceptable load loss”? In other cases, it is up to the BA, RC, or RP to determine the Facility’s unacceptable load loss.

Likes 0	
Dislikes 0	

Response

Lucinda Bradshaw - Lucinda Bradshaw On Behalf of: Byron Booker, Oncor Electric Delivery, 1; - Lucinda Bradshaw	
Answer	Yes
Document Name	

Comment

N/A	
Likes 0	
Dislikes 0	
Response	
Monika Montez - California ISO - 2 - WECC, Group Name ISO/RTO Council Standards Review Committee (SRC)	
Answer	Yes
Document Name	
Comment	
The ISO/RTO Council (IRC) Standards Review Committee (SRC) agrees that the SAR provides clarity.	
Likes 0	
Dislikes 0	
Response	
Kennedy Meier - Electric Reliability Council of Texas, Inc. - 2	
Answer	Yes
Document Name	
Comment	
ERCOT joins the comments submitted by the IRC SRC and adopts them as its own.	
Likes 0	
Dislikes 0	
Response	
Daniel Gacek - Exelon - 1, Group Name Exelon	
Answer	Yes
Document Name	
Comment	
While Exelon agrees the modifications in the new Requirement R3 address the issues identified in the SAR, we do suggest the following enhancements.	

The sub-requirement R3.1 minimum requirement for thresholds identifying unacceptable generation and load loss within an Interconnection would benefit from additional clarification and guidance. For example, perhaps data regarding frequency response to loss of generation and loss of load could act as guidance for entities to establish these thresholds. To reduce the burden on smaller TOs of developing an R3 methodology and performing the R5 planning studies, consider providing an option for entities to use the list of transmission stations or substations obtained from the Attachment 1 analysis, as the input to R7 for primary control center determination, and as the input to R8 to begin the physical attack evaluation. Attachment 1 would therefore be an option as the R3 methodology that would then be applied in R5. R4 would still be required. The R6 third party review would be limited to a review of the Attachment 1 analysis.	
Likes 0	
Dislikes 0	
Response	
Jeffrey Streifling - NB Power Corporation - 1	
Answer	Yes
Document Name	
Comment	
Likes 0	
Dislikes 0	
Response	
Tamarra Hardie - Public Utility District No. 1 of Chelan County - 6, Group Name CHPD	
Answer	Yes
Document Name	
Comment	
Likes 0	
Dislikes 0	
Response	
James Keele - Entergy - 3	
Answer	Yes
Document Name	
Comment	

Likes 0	
Dislikes 0	
Response	
Darko Kovac, P.E. - Gainesville Regional Utilities - 1,3,5	
Answer	Yes
Document Name	
Comment	
Likes 0	
Dislikes 0	
Response	
Tim Kelley - Tim Kelley On Behalf of: Charles Norton, Sacramento Municipal Utility District, 3, 6, 4, 1, 5; Foung Mua, Sacramento Municipal Utility District, 3, 6, 4, 1, 5; Kevin Smith, Balancing Authority of Northern California, 1; Nicole Looney, Sacramento Municipal Utility District, 3, 6, 4, 1, 5; Ryder Couch, Sacramento Municipal Utility District, 3, 6, 4, 1, 5; Wei Shao, Sacramento Municipal Utility District, 3, 6, 4, 1, 5; - Tim Kelley, Group Name SMUD and BANC	
Answer	Yes
Document Name	
Comment	
Likes 0	
Dislikes 0	
Response	
Donna Wood - Tri-State G and T Association, Inc. - 1	
Answer	Yes
Document Name	
Comment	
Likes 0	
Dislikes 0	

Response	
David Melanson - NB Power Corporation - New Brunswick Power Transmission Corporation - 5	
Answer	Yes
Document Name	
Comment	
Likes 0	
Dislikes 0	
Response	
Nikki Carson-Marquis - Nikki Carson-Marquis On Behalf of: Theresa Allard, Minnkota Power Cooperative Inc., 1; - Nikki Carson-Marquis	
Answer	Yes
Document Name	
Comment	
Likes 0	
Dislikes 0	
Response	
Phillip Martinez - Phillip Martinez On Behalf of: Richard Jackson, U.S. Bureau of Reclamation, 1, 5; - U.S. Bureau of Reclamation - 1 - WECC	
Answer	Yes
Document Name	
Comment	
Likes 0	
Dislikes 0	
Response	
Dermot Smyth - Con Ed - Consolidated Edison Co. of New York - 1, Group Name Con Edison	
Answer	Yes
Document Name	

Comment	
Likes 0	
Dislikes 0	
Response	
Jason Chandler - Con Ed - Consolidated Edison Co. of New York - 6	
Answer	Yes
Document Name	
Comment	
Likes 0	
Dislikes 0	
Response	
Wendy Kalidass - U.S. Bureau of Reclamation - 5	
Answer	Yes
Document Name	
Comment	
Likes 0	
Dislikes 0	
Response	
Chantal Mazza - Chantal Mazza On Behalf of: Junji Yamaguchi, Hydro-Quebec (HQ), 1, 5; Nicolas Turcotte, Hydro-Quebec (HQ), 1, 5; - Chantal Mazza	
Answer	Yes
Document Name	
Comment	
Likes 0	
Dislikes 0	

Response	
Lincoln Burton - Con Ed - Consolidated Edison Co. of New York - 3	
Answer	Yes
Document Name	
Comment	
Likes 0	
Dislikes 0	
Response	
Zahid Qayyum - New York Power Authority - 5	
Answer	Yes
Document Name	
Comment	
Likes 0	
Dislikes 0	
Response	
Michelle Pagano - Con Ed - Consolidated Edison Co. of New York - 5	
Answer	Yes
Document Name	
Comment	
Likes 0	
Dislikes 0	
Response	
Rebika Yitna - Rebika Yitna On Behalf of: Roger Brand, MEAG Power, 3, 1; - Rebika Yitna	
Answer	Yes
Document Name	

Comment	
Likes 0	
Dislikes 0	
Response	
Ruida Shu - Northeast Power Coordinating Council - 10, Group Name NPCC RSC	
Answer	Yes
Document Name	
Comment	
Likes 0	
Dislikes 0	
Response	
Robert Follini - Avista - Avista Corporation - 3	
Answer	Yes
Document Name	
Comment	
Likes 0	
Dislikes 0	
Response	
Lexi Dobrzysnki - Lexi Dobrzysnki On Behalf of: Angela Dockter, Alliant Energy Corporation Services, Inc., 4; - Lexi Dobrzysnki	
Answer	
Document Name	
Comment	
Alliant Energy mirrors the MRO NSRF group Comments.	
Likes 0	
Dislikes 0	

Response
Rachel Coyne - Texas Reliability Entity, Inc. - 10
Answer	
Document Name	
Comment
Texas RE is still concerned the proposed Requirement Part 3.3 language does not specify the type of fault conditions (line-to-ground fault or three-phase fault) criteria that needs to be studied. If the language will not be added to the requirement, Texas RE requests the Technical Rationale specify whether single-line-to-ground faults or three-phase-to-ground faults are to be included in the simulations, to ensure consistency and clarity in fault analysis across entities.
Likes 0	
Dislikes 0	
Response

4. Do you agree with the modifications made in CIP-014-4 with new Requirement R4 to address the issues identified in the SAR? If you do not agree, please provide your recommendation and, if appropriate, technical or procedural justification.

Robert Blackney - Edison International - Southern California Edison Company - 1

Answer	No
Document Name	

Comment

See comments submitted by Edison Electric Institute.

Likes 0	
Dislikes 0	

Response

Lucinda Bradshaw - Lucinda Bradshaw On Behalf of: Byron Booker, Oncor Electric Delivery, 1; - Lucinda Bradshaw

Answer	No
Document Name	

Comment

Oncor appreciates the SDT's response to Oncor's previous comment in the last draft, which affirmed that each TO may prepare its own risk assessment of the subject station and may use its own methodology. Oncor also appreciates the SDT's clarification that, in the event agreement cannot be reached, each TO is able to justify its results using its own supporting evidence.

To ensure this intent of the SDT is clearly conveyed, Oncor believes it would be beneficial to include this clarification directly in Requirement R4 language. Accordingly, Oncor recommends the following addition to Requirement R4:

Each Transmission Owner with applicable Transmission station(s) and Transmission substations(s) identified in Requirement R1 containing Bulk Electric System (BES) Elements owned by multiple Transmission Owners shall coordinate with each appropriate Transmission Owner(s) to determine and document their individual and joint responsibilities for documenting a risk assessment methodology under Requirement R3 and for performing any required risk assessments per Requirement R5. ***In the event that coordination of individual and joint responsibilities cannot be achieved for documenting a risk assessment methodology under Requirement R3 and for performing any required risk assessments per Requirement R5, each Transmission Owner shall document and justify its own risk assessment using its own methodology and evidence.***

Likes 0	
Dislikes 0	

Response

Gail Elliott - Gail Elliott On Behalf of: Michael Moltane, International Transmission Company Holdings Corporation, 1; - Gail Elliott

Answer	No
Document Name	

Comment
ITC suggests either the removal of or the following revision to Requirement R4: R4. Each Transmission Owner with applicable Transmission station(s) and Transmission substation(s) identified in Requirement R1 containing Bulk Electric System (BES) Elements **greater than 200 kV or identified as part of an IROL or essential to meeting an NPIR** owned by multiple Transmission Owners shall coordinate with each appropriate Transmission Owner(s) to determine and document their individual and joint responsibilities for documenting a risk assessment methodology under Requirement R3 and for performing any required risk assessments per Requirement R5. R4 is administrative requiring documentation for all joint stations. Many joint stations have existed for decades where the two entities have an understanding of who is responsible for what parts of compliance. When documentation is being required, many entities legal groups will feel a need to be involved making this both time consuming and costly.

Likes 0	
Dislikes 0	

Response

Kristine Martz - Edison Electric Institute - NA - Not Applicable - NA - Not Applicable	
Answer	No
Document Name	

Comment
EEI suggests the following revision to Requirement R4: R4. Each Transmission Owner with applicable Transmission station(s) and Transmission substation(s) identified in Requirement R1 containing Bulk Electric System (BES) Elements **greater than 200 kV or identified as part of an IROL or essential to meeting an NPIR** owned by multiple Transmission Owners shall coordinate with each appropriate Transmission Owner(s) to determine and document their individual and joint responsibilities for documenting a risk assessment methodology under Requirement R3 and for performing any required risk assessments per Requirement R5. EEI also asks the drafting team to consider adding content to the Technical Rationale describing how an entity can prove that they do not have anyone to coordinate with because there are no jointly owned Transmission station(s) or Transmission substation(s).

Likes 0	
Dislikes 0	

Response

Hillary Creurer - Allete - Minnesota Power, Inc. - 1	
Answer	No
Document Name	

Comment
Minnesota Power supports EEI’s comments.

Likes 0	
Dislikes 0	

Response

Selene Willis - Edison International - Southern California Edison Company - 5

Answer	No
Document Name	

Comment

"Please see EEI Comments"

Likes 0	
Dislikes 0	

Response

Ruida Shu - Northeast Power Coordinating Council - 10, Group Name NPCC RSC

Answer	No
Document Name	

Comment

Based on the Technical Rationale, the inclusion of “BES Elements” appears to reference the addition of jointly owned Transmission stations and Transmission substations in the Applicability section. However, introducing the term “BES Elements” creates confusion by shifting the focus to individual elements rather than the applicable Transmission stations and substations.

Likes 0	
Dislikes 0	

Response

Zahid Qayyum - New York Power Authority - 5

Answer	No
Document Name	

Comment

NYPA supports NPCC RSC comments.

Likes 0	

Dislikes 0	

Response

Jamison Cawley - Nebraska Public Power District - 1

Answer	No
Document Name	

Comment

The CIP-014 RA should be limited to the substation equipment that the TO owns. There are different study assumptions and criteria available to different TOs and to attempt to coordinate this on this new 36-month timeframe will only require further resources from multiple TOs who may not be willing to share CEII information in an open forum.

Likes 1	Nebraska Public Power District, 5, Bender Ronald
Dislikes 0	

Response

Alan Kloster - Alan Kloster On Behalf of: Jeremy Harris, Evergy, 3, 5, 1, 6; Kevin Frick, Evergy, 3, 5, 1, 6; Marcus Moor, Evergy, 3, 5, 1, 6; Tiffany Lake, Evergy, 3, 5, 1, 6; - Alan Kloster

Answer	No
Document Name	

Comment

Evergy supports and incorporates by reference the comments of the Edison Electric Institute and MRO NSRF for question #4.

Likes 0	
Dislikes 0	

Response

Chantal Mazza - Chantal Mazza On Behalf of: Junji Yamaguchi, Hydro-Quebec (HQ), 1, 5; Nicolas Turcotte, Hydro-Quebec (HQ), 1, 5; - Chantal Mazza

Answer	No
Document Name	

Comment

Based on the Technical Rationale, the inclusion of “BES Elements” appears to reference the addition of jointly owned Transmission stations and Transmission substations in the Applicability section. However, introducing the term “BES Elements” creates confusion by shifting the focus to individual elements rather than the applicable Transmission stations and substations.

Likes 0	

Dislikes 0	

Response

Steven Belle - Dominion - Dominion Virginia Power - 1

Answer	No
Document Name	

Comment

Dominion supports EEI's comments.

Likes 0	
Dislikes 0	

Response

Brian Millard - Tennessee Valley Authority - 1,3,5,6 - SERC, Group Name TVA RBB

Answer	No
Document Name	

Comment

TVA supports coordination among joint owners as an important goal. However, the proposed language essentially introduces a major coordination burden, and it assumes a level of entity collaboration, timing, and methodological alignment. It also raises a compliance risk for one entity being dependent on the responsiveness and practices of another.

TVA suggests modifying the draft language to provide flexibility and protects compliant TOs from being penalized for other's inaction(s), as follows:

"Each Transmission Owner with applicable Transmission station(s) and Transmission substation(s) identified in Requirement R1 containing Bulk Electric System (BES) Elements owned by multiple Transmission Owners shall coordinate with those each appropriate Transmission Owner(s) to determine and document their individual responsibilities for documenting a risk assessment methodology under Requirement R3 and for performing any required risk assessments per Requirement R5."

Or…

"Each Transmission Owner with applicable Transmission station(s) and Transmission substation(s) identified in Requirement R1 containing Bulk Electric System (BES) Elements owned by multiple Transmission Owners shall coordinate with those each appropriate Transmission Owner(s) to determine and document their individual responsibilities for documenting a risk assessment methodology under Requirement R3 and for performing any required risk assessments per Requirement R5. In cases where agreement is not achieved, each Transmission Owner shall independently assess and document its own responsibilities and the basis for any assumptions regarding joint ownership impacts."

Likes 0	
Dislikes 0	

Response

Josh Schumacher - Black Hills Corporation - 6, Group Name Black Hills Corporation Segments 1, 3, 5, 6	
Answer	No
Document Name	
Comment	
Black Hills Corporation agrees with EEI's suggested revision to the language in Requirement R4. We also agree with adding content to the Technical Rationale describing how an entity can prove they do not have any jointly owned Transmission stations or substations that require coordinating with another party.	
Likes 0	
Dislikes 0	
Response	

Isidoro Behar - Long Island Power Authority - 1	
Answer	No
Document Name	
Comment	

As a general comment, Req# 4 needs to be reviewed in detail to ensure clarity and to ensure clear compliance responsibilities.

Req #4 states:

"Each Transmission Owner with applicable Transmission station(s) and Transmission substation(s) identified in Requirement R1 containing Bulk Electric System (BES) Elements owned by multiple Transmission Owners shall coordinate with each appropriate Transmission Owner(s) to determine and document their individual and joint responsibilities for documenting a risk assessment methodology under Requirement R3 and for performing any required risk assessments per Requirement R5."

Req #4 now requires a Transmission Owner to DOCUMENT which TO is responsible for DOCUMENTING specific portions of the risk assessment methodology (RAM). In the previous version of the standard, it only asked TOs to document who is responsible for PERFORMING the risk assessment methodology, but now it must be explicitly outlined who is responsible for even DOCUMENTING parts of that RAM. We would like to point this out so that the SDT can verify if "documenting" individual and joint responsibilities for "documenting" a risk assessment methodology is part of the intent of this revised requirement.

Based on the Technical Rationale, the inclusion of "BES Elements" appears to reference the addition of jointly owned Transmission stations and Transmission substations in the Applicability section. However, introducing the term "BES Elements" creates confusion by shifting the focus to individual elements rather than the applicable Transmission stations and substations.

Req #4 specifically addresses facilities (BES Elements) with joint ownership to coordinate/collaborate. One improvement would be to include Transmission Owners whose stations have been identified as part of Req #2 to also be included in this requirement to coordinate. The ownership of the applicable and proximate stations may be different, and thus we feel the concept of coordination with respect to Req #2 should apply.

We note that there are various possibilities with respect to ownership and to what stations may be considered applicable versus proximate. It is noted that an applicable station owned by one TO may also be considered a proximate station from the perspective of another TO that owns an adjacent applicable station (and vice versa; a proximate station from the perspective of a TO may also be considered an applicable station by another TO).

Likes 0	

Dislikes 0	

Response

David Melanson - NB Power Corporation - New Brunswick Power Transmission Corporation - 5	
Answer	No
Document Name	

Comment
NB Power supports NPCCs comments: "Based on the Technical Rationale, the addition of “BES Elements” points to the addition of “jointly owned” Transmission stations and Transmission substations in the Applicability section. However, the introduction of the term(s) “BES Elements” adds confusion by speaking to Elements instead of the applicable Transmission stations and Transmission substations."

Likes 0	
Dislikes 0	

Response

Mark Garza - FirstEnergy - FirstEnergy Corporation - 4, Group Name FE Voter	
Answer	No
Document Name	

Comment
FirstEnergy supports EEI comments which state: R4. Each Transmission Owner with applicable Transmission station(s) and Transmission substation(s) identified in Requirement R1 containing Bulk Electric System (BES) Elements **greater than 200 kV or identified as part of an IROL or essential to meeting an NPIR** owned by multiple Transmission Owners shall coordinate with each appropriate Transmission Owner(s) to determine and document their individual and joint responsibilities for documenting a risk assessment methodology under Requirement R3 and for performing any required risk assessments per Requirement R5. EEI also asks the drafting team to consider adding content to the Technical Rationale describing how an entity can prove that they do not have anyone to coordinate with because there are no jointly owned Transmission station(s) or Transmission substation(s).

Likes 0	
Dislikes 0	

Response

Diana Aguas - CenterPoint Energy Houston Electric, LLC - 1 - Texas RE	
Answer	No

Document Name	
Comment	
CEHE agrees with EEI's comments.	
Likes 0	
Dislikes 0	
Response	
Stephen Stafford - Stephen Stafford On Behalf of: Greg Davis, Georgia Transmission Corporation, 1; - Stephen Stafford	
Answer	No
Document Name	
Comment	
The requirement is appropriate in the context that the referenced risk assessment is from a physical security perspective and not a transmission planning analysis perspective. Should the intent of this comment be applicable to physical security and not a transmission planning analysis, then our answer would be yes.	
Likes 0	
Dislikes 0	
Response	
Ronald Hoover - Bonneville Power Administration - 1,3,5,6 - WECC	
Answer	No
Document Name	
Comment	
BPA believes it would be more thorough to include R2-identified proximate substations in the language of R4, because proximate substations could be jointly owned and require the same coordination of roles and responsibilities for including them in R3 and R5 activities.	
Likes 0	
Dislikes 0	
Response	
Jeffrey Streifling - NB Power Corporation - 1	
Answer	No
Document Name	

Comment
Based on the Technical Rationale, the addition of “BES Elements” points to the addition of “jointly owned” Transmission stations and Transmission substations in the Applicability section. However, the introduction of the term(s) “BES Elements” adds confusion by speaking to Elements instead of the applicable Transmission stations and Transmission substations.

Likes 0	
Dislikes 0	

Response

Melanie Wong - Seminole Electric Cooperative, Inc. - 5

Answer	No
Document Name	

Comment

Likes 0	
Dislikes 0	

Response

Kennedy Meier - Electric Reliability Council of Texas, Inc. - 2

Answer	Yes
Document Name	

Comment
ERCOT joins the comments submitted by the IRC SRC and adopts them as its own.

Likes 0	
Dislikes 0	

Response

Monika Montez - California ISO - 2 - WECC, Group Name ISO/RTO Council Standards Review Committee (SRC)

Answer	Yes
Document Name	

Comment

The ISO/RTO Council (IRC) Standards Review Committee (SRC) agrees that the SAR provides clarity.

Likes 0	
Dislikes 0	

Response

Nick Leathers - Nick Leathers On Behalf of: David Jendras Sr, Ameren - Ameren Services, 3, 6, 1; - Nick Leathers

Answer	Yes
Document Name	

Comment

This requirement does not apply to Ameren.

Likes 0	
Dislikes 0	

Response

Ben Hammer - Western Area Power Administration - 1

Answer	Yes
Document Name	

Comment

An auditor may asks a Registered Entity to produce evidence proving a negative, i.e. that one or more subs are solely owned. M4 discusses how to show evidence that coordination with joint owners has been completed, but it would be helpful if the drafting team could provide clarity on what to provide as evidence if no joint owners are identified.

Likes 0	
Dislikes 0	

Response

Timothy Singh - Timothy Singh On Behalf of: Israel Perez, Salt River Project, 3, 6, 5, 1; Laura Somak, Salt River Project, 3, 6, 5, 1; Mathew Weber, Salt River Project, 3, 6, 5, 1; Matthew Jaramilla, Salt River Project, 3, 6, 5, 1; - Timothy Singh

Answer	Yes
Document Name	

Comment

SRP agrees with Requirement R4 addressing the SARs concern about joint ownership.

Likes 0	
Dislikes 0	

Response

Matt Carden - Southern Company - Southern Company Services, Inc. - 1

Answer	Yes
Document Name	

Comment

Southern Company agrees with Requirement R4 with the below suggestion for consideration:

The removal of including “documentating a risk assessment methodology under Requirement R3”. This is redundant since any Transmission Owner performing Requirement R5 must have a risk assessment methodology for the stations being assessed per Requirements R1, R2, and R4.

R4.
Each Transmission Owner with applicable Transmission station(s) and Transmission substation(s) identified in Requirement R1 containing Bulk Electric System (BES) Elements owned by multiple Transmission Owners shall coordinate with each appropriate Transmission Owner(s) to determine and document their individual and joint responsibilities for documenting a risk assessment methodology under Requirement R3 and for performing any required risk assessments per Requirement R5.

Likes 0	
Dislikes 0	

Response

Misty Carneal - Duke Energy - 1,3,5,6 - Texas RE,SERC,RF

Answer	Yes
Document Name	

Comment

Duke Energy agrees with the modifications made to R4.

Likes 0	
Dislikes 0	

Response

Nikki Carson-Marquis - Nikki Carson-Marquis On Behalf of: Theresa Allard, Minnkota Power Cooperative Inc., 1; - Nikki Carson-Marquis	
Answer	Yes
Document Name	
Comment	
Likes 0	
Dislikes 0	
Response	
Randy Peters - Manitoba Hydro - 1,3,5,6 - MRO	
Answer	Yes
Document Name	
Comment	
: It makes sense to coordinate in cases where there are joint owners	
Likes 0	
Dislikes 0	
Response	
Andrew Smith - APS - Arizona Public Service Co. - 5	
Answer	Yes
Document Name	
Comment	
AZPS agrees with the modifications made in R4	
Likes 0	
Dislikes 0	
Response	
Amy Wilke - American Transmission Company, LLC - 1	

Answer	Yes
Document Name	
Comment	
ATC agrees with MRO NSRF comments.	
Likes 0	
Dislikes 0	
Response	

Amy Key - Berkshire Hathaway Energy - MidAmerican Energy Co. - 3

Answer	Yes
Document Name	
Comment	
MEC has no comment	
Likes 0	
Dislikes 0	
Response	

Anna Martinson - MRO - 1,2,3,4,5,6 - MRO, Group Name MRO Group

Answer	Yes
Document Name	
Comment	
MRO NSRF has concerns that there may be situations in which an auditor asks a Registered Entity to produce evidence proving a negative, i.e. that one or more subs are solely owned. M4 discusses how to show evidence that you've coordinated with joint owners, but it would be helpful if the drafting team could provide clarity on what to provide as evidence if no joint owners are identified.	
Likes 0	
Dislikes 0	
Response	

Daniel Gacek - Exelon - 1, Group Name Exelon

Answer	Yes

Document Name	
Comment	
Likes 0	
Dislikes 0	
Response	
Emma Halilovic - Hydro One Networks, Inc. - 1	
Answer	Yes
Document Name	
Comment	
Likes 0	
Dislikes 0	
Response	
Jennie Wike - Jennie Wike On Behalf of: John Merrell, Tacoma Public Utilities (Tacoma, WA), 1, 4, 5, 6, 3; - Jennie Wike, Group Name Tacoma Power	
Answer	Yes
Document Name	
Comment	
Likes 0	
Dislikes 0	
Response	
Elizabeth Davis - Elizabeth Davis On Behalf of: Thomas Foster, PJM Interconnection, L.L.C., 2; - Elizabeth Davis	
Answer	Yes
Document Name	
Comment	
Likes 0	
Dislikes 0	

Response	
Kelley Sargent - Puget Sound Energy, Inc. - 3	
Answer	Yes
Document Name	
Comment	
Likes 0	
Dislikes 0	
Response	
Carver Powers - Utility Services, Inc. - 4	
Answer	Yes
Document Name	
Comment	
Likes 0	
Dislikes 0	
Response	
Dan Perry - TXNM Energy - 1,3,5 - WECC,Texas RE	
Answer	Yes
Document Name	
Comment	
Likes 0	
Dislikes 0	
Response	
Wesley Maurer - Lower Colorado River Authority - 1 - Texas RE	
Answer	Yes
Document Name	

Comment	
Likes 0	
Dislikes 0	
Response	
Joseph Scott - Lower Colorado River Authority - 5	
Answer	Yes
Document Name	
Comment	
Likes 0	
Dislikes 0	
Response	
Richard Vendetti - NextEra Energy - 5	
Answer	Yes
Document Name	
Comment	
Likes 0	
Dislikes 0	
Response	
Chris Wagner - Santee Cooper - 1, Group Name Santee Cooper	
Answer	Yes
Document Name	
Comment	
Likes 0	
Dislikes 0	
Response	

Robert Follini - Avista - Avista Corporation - 3	
Answer	Yes
Document Name	
Comment	
Likes 0	
Dislikes 0	
Response	
Rebika Yitna - Rebika Yitna On Behalf of: Roger Brand, MEAG Power, 3, 1; - Rebika Yitna	
Answer	Yes
Document Name	
Comment	
Likes 0	
Dislikes 0	
Response	
Michelle Pagano - Con Ed - Consolidated Edison Co. of New York - 5	
Answer	Yes
Document Name	
Comment	
Likes 0	
Dislikes 0	
Response	
Mark Flanary - Midwest Reliability Organization - 10	
Answer	Yes
Document Name	
Comment	

Likes 0	
Dislikes 0	
Response	
Rachel Coyne - Texas Reliability Entity, Inc. - 10	
Answer	Yes
Document Name	
Comment	
Likes 0	
Dislikes 0	
Response	
Lincoln Burton - Con Ed - Consolidated Edison Co. of New York - 3	
Answer	Yes
Document Name	
Comment	
Likes 0	
Dislikes 0	
Response	
Wendy Kalidass - U.S. Bureau of Reclamation - 5	
Answer	Yes
Document Name	
Comment	
Likes 0	
Dislikes 0	
Response	

Jason Chandler - Con Ed - Consolidated Edison Co. of New York - 6	
Answer	Yes
Document Name	
Comment	
Likes 0	
Dislikes 0	
Response	
Dave Krueger - SERC Reliability Corporation - 10	
Answer	Yes
Document Name	
Comment	
Likes 0	
Dislikes 0	
Response	
Dermot Smyth - Con Ed - Consolidated Edison Co. of New York - 1, Group Name Con Edison	
Answer	Yes
Document Name	
Comment	
Likes 0	
Dislikes 0	
Response	
Phillip Martinez - Phillip Martinez On Behalf of: Richard Jackson, U.S. Bureau of Reclamation, 1, 5; - U.S. Bureau of Reclamation - 1 - WECC	
Answer	Yes
Document Name	
Comment	

Likes 0	
Dislikes 0	
Response	
Jodi Yeary - AEP - 3	
Answer	Yes
Document Name	
Comment	
Likes 0	
Dislikes 0	
Response	
Greg Sorenson - Greg Sorenson On Behalf of: Tremayne Brown, ReliabilityFirst , 10; - Greg Sorenson	
Answer	Yes
Document Name	
Comment	
Likes 0	
Dislikes 0	
Response	
Donna Wood - Tri-State G and T Association, Inc. - 1	
Answer	Yes
Document Name	
Comment	
Likes 0	
Dislikes 0	
Response	

Tim Kelley - Tim Kelley On Behalf of: Charles Norton, Sacramento Municipal Utility District, 3, 6, 4, 1, 5; Foung Mua, Sacramento Municipal Utility District, 3, 6, 4, 1, 5; Kevin Smith, Balancing Authority of Northern California, 1; Nicole Looney, Sacramento Municipal Utility District, 3, 6, 4, 1, 5; Ryder Couch, Sacramento Municipal Utility District, 3, 6, 4, 1, 5; Wei Shao, Sacramento Municipal Utility District, 3, 6, 4, 1, 5; - Tim Kelley, Group Name SMUD and BANC	
Answer	Yes
Document Name	
Comment	
Likes 0	
Dislikes 0	
Response	
Darko Kovac, P.E. - Gainesville Regional Utilities - 1,3,5	
Answer	Yes
Document Name	
Comment	
Likes 0	
Dislikes 0	
Response	
Thomas Breen - Berkshire Hathaway Energy - MidAmerican Energy Co. - 1	
Answer	Yes
Document Name	
Comment	
Likes 0	
Dislikes 0	
Response	
Jessica Cordero - Unisource - Tucson Electric Power Co. - 1	
Answer	Yes
Document Name	
Comment	

Likes 0	
Dislikes 0	
Response	
James Keele - Entergy - 3	
Answer	Yes
Document Name	
Comment	
Likes 0	
Dislikes 0	
Response	
Tamarra Hardie - Public Utility District No. 1 of Chelan County - 6, Group Name CHPD	
Answer	Yes
Document Name	
Comment	
Likes 0	
Dislikes 0	
Response	
Kevin Conway - Western Power Pool - 4	
Answer	Yes
Document Name	
Comment	
Likes 0	
Dislikes 0	
Response	

Sean Steffensen - IDACORP - Idaho Power Company - 1	
Answer	Yes
Document Name	
Comment	
Likes 0	
Dislikes 0	
Response	

Alison Nickells - NiSource - Northern Indiana Public Service Co. - 1	
Answer	Yes
Document Name	
Comment	
Likes 0	
Dislikes 0	
Response	

Lexi Dobrzysnki - Lexi Dobrzysnki On Behalf of: Angela Dockter, Alliant Energy Corporation Services, Inc., 4; - Lexi Dobrzysnki	
Answer	
Document Name	
Comment	
Alliant Energy mirrors the MRO NSRF group Comments.	
Likes 0	
Dislikes 0	
Response	

5. Do you agree with the modifications made in CIP-014-4 with adding Requirement R5 to address the issues identified in the SAR? If you do not agree, please provide your recommendation and, if appropriate, technical or procedural justification.

Jeffrey Streifling - NB Power Corporation - 1

Answer	No
Document Name	

Comment

Clarify if at the end of the 36-month period the entity must have the Risk Assessment started or completed? TFIST suggest splitting the operational assessment and security assessment into distinct assessments in the timeline to reduce confusion, and not just the “risk assessment”.

Likes 0	
Dislikes 0	

Response

Ronald Hoover - Bonneville Power Administration - 1,3,5,6 - WECC

Answer	No
Document Name	

Comment

BPA believes R5 is missing a requirement to coordinate in order to ensure data from proximate Transmission stations and sub-stations can be obtained and validated. Without a requirement to coordinate, BPA believes there would be difficulty identifying the Primary Control Center operationally controlling the proximate Transmission stations and sub-stations. BPA also recommends adding language to R5 to clarify how a Registered Entity should address negative responses from proximate substation owners.

Likes 0	
Dislikes 0	

Response

Stephen Stafford - Stephen Stafford On Behalf of: Greg Davis, Georgia Transmission Corporation, 1; - Stephen Stafford

Answer	No
Document Name	

Comment

There is no issue with performing a risk assessment every 36 months. However, Transmission Owners are not the appropriate registered entity to conduct planning analyses. Nor are the CIP standards the appropriate place to document planning analysis requirements. Planning studies should be governed within the TPL group of standards.

Likes 0	
Dislikes 0	

Response

Jessica Cordero - Unisource - Tucson Electric Power Co. - 1

Answer	No
Document Name	

Comment

TEPC agrees with EEI's comments.

Likes 0	
Dislikes 0	

Response

Mark Garza - FirstEnergy - FirstEnergy Corporation - 4, Group Name FE Voter

Answer	No
Document Name	

Comment

FirstEnergy asks for clarification of responsibilities toward R5 - specifically as realted to unregistered DERs and IBRs.

FirstEnergy also supports EEI's comments which state:

EEI suggests the following revisions to Requirement R5.

The revised draft CIP-014-4 Requirement R5 includes a new statement: "If proximate Transmission station(s) and Transmission substation(s) were identified in Requirement R2, they should also be

included in the risk assessment." The word "should" could be interpreted as a recommendation instead of a mandatory requirement.

Additionally, by referring to "proximate Transmission station(s) and Transmission substation(s)… identified in Requirement R2" in Requirement R5, all identified proximate Transmission station(s) and Transmission substation(s) would be subject to Requirements R8-R10, not just those that are applicable.

If it is the intention of the drafting team to require applicable proximate Transmission station(s) and Transmission substation(s) to be included in the Requirement R5 risk assessment, EEI suggests the following:

R5. At least once every 36 calendar months, each Transmission Owner shall perform a risk assessment to identify applicable Transmission station(s) and Transmission substation(s) identified in Requirement R1, that if rendered inoperable or damaged could result in instability, uncontrolled separation, or Cascading within an interconnection, using the methodology established in Requirement R3, including any Transmission station(s) and Transmission substation(s) identified in accordance with Requirement R4.

EEI also asks the drafting team to consider adding information to the technical rationale discussing scenarios where a new risk assessment demonstrates that a substation is no longer applicable to CIP-014, but a previous physical security plan includes security measures with future due dates. The technical rationale could include discussion of actions to take when security measures are no longer required for the de-classified transmission substation(s).

Likes 0	
Dislikes 0	

Response

David Melanson - NB Power Corporation - New Brunswick Power Transmission Corporation - 5

Answer	No
Document Name	

Comment

NB Power supports NPCCs comments:

"R5. Please clarify whether, at the end of the 36-month period, the entity is required to have initiated or completed the Risk Assessment. NPCC RSC recommends separating the operational assessment and security assessment into distinct components within the timeline to reduce confusion, rather than referring to both collectively as the “risk assessment.”
In the final sentence of R5, the phrase “they should also be included in the risk assessment” raises a question: does this imply that proximate Transmission station(s) and Transmission substation(s) are optional in the risk assessment?"

Likes 0	
Dislikes 0	

Response

Nikki Carson-Marquis - Nikki Carson-Marquis On Behalf of: Theresa Allard, Minnkota Power Cooperative Inc., 1; - Nikki Carson-Marquis

Answer	No
Document Name	

Comment

MPC strongly disagrees with the use of a 36-month timeframe for utilities who have not previously identified any Transmission stations or substations as critical as it will lead to increased study costs with little or no benefit to the reliability of the BES. Instead, MPC proposes retaining the requirement to perform a risk assessment every 60 months for TOs that have not previously identified applicable Transmission stations or substations, and include Transmission station(s) and Transmission substation(s) planned to be in service within 60 calendar months.

SAR objective number 2 states a goal for this project is to “correct any discrepancies between the study period, frequency of study, and the base case(s) a Transmission Owner uses.” This is the basis for the SDT’s justification to change the risk assessment timeframe from 60 months for TOs without applicable Transmission stations or substations to 36 months for all TOs without exception. Further, the Technical Rationale states the change to 36 months was to align the CIP-014 risk assessment with the annual model build time frame of Standard TPL-001. Because the CIP-014 analysis

does not depend on the models built for TPL-001, MPC believes changing the risk assessment time frame to align with the TPL-001 model build process does not provide benefit to the CIP-014 analysis. Additionally, the existing 60 month timeframe for TOs without applicable Transmission station(s)/substation(s) still aligns with the 12-month model build timeframe of the TPL-001 standard.

MPC continues to hold the position that given the very slow pace of construction of new electrical infrastructure due to increased equipment lead times, supply chain constraints, and labor shortages, it is highly unlikely that a modification to an existing non-critical station or substation that would result in the station or substation becoming critical would be planned, designed, and constructed within 36 months. It is equally unlikely that a newly constructed CIP-014 critical (sub)station would be completed within this timeframe. As stations and substations planned to be in service within 24 months of the risk assessment are already required to be included under R1 of CIP-014-3, changing the risk assessment timeframe from 60 months to 36 months is very unlikely to identify new Transmission stations or substations that would not be identified under CIP-014-3.

For utilities who have not identified previously identified (sub)stations as critical, moving the risk assessment timeframe from 60 calendar months to 36 calendar months will result in increased costs due to more frequent risk assessments, with the more frequent assessments having no BES reliability benefit as they have little to no chance of identifying stations or substations as CIP-014 critical that would not already have been under the CIP-014-3.

Likes 0	
Dislikes 0	

Response

Isidoro Behar - Long Island Power Authority - 1

Answer	No
Document Name	

Comment

In general, we recommend that the wording in the main requirement section of Req #5 be reviewed in detail for clarity.

Requirement #5 states:

"*At least once every 36 calendar months, each Transmission Owner shall perform a risk assessment to identify applicable Transmission station(s) and Transmission substation(s) identified in Requirement R1, that if rendered inoperable or damaged could result in instability, uncontrolled separation, or Cascading within an Interconnection, using the methodology established in Requirement R3, including any Transmission station(s) and Transmission substation(s) identified in accordance with Requirement R4. If proximate Transmission station(s) and Transmission substation(s) were identified in Requirement R2, they should also be included in the risk assessment*."

a) This requirement introduces the concept of "*that if rendered inoperable or damaged*". While the verbiage **"that if rendered inoperable or damaged"** may be introduced within the Technical Rationale, this verbiage is confusing when reading Req #5 – and as such it is recommended to correlate what is meant by "that if rendered inoperable or damaged" within Requirement #3 (or introduce this concept within the Req #3). Requirement #3 mentions "the loss of each applicable Transmission station or Transmission substation identified in Requirement R1" – with no mention or correlation of "loss of each station" to "that if rendered inoperable or damaged".

b) The verbiage states "using the methodology established in Requirement R3, including any Transmission **station(s)** and Transmission **substation(s)** identified in accordance with Requirement R4". However, as written, Req #4 relates to the coordination with respect to "**Bulk Electric System (BES) Elements** owned by multiple Transmission Owners". As written, Req #4 does not identify "stations".

c) The verbiage states “If proximate Transmission station(s) and Transmission substation(s) were identified in Requirement R2, they **should** also be included in the risk assessment.”

This implies that the inclusion of proximate stations in the risk assessment is optional. If this is a requirement, the term “should” should be replaced by “shall”.

d) The verbiage states “If **proximate** Transmission station(s) and Transmission substation(s) were identified in Requirement R2, they **should** also be included in the risk assessment.” This requirement is not clear and needs clarification.

- This wording contradicts with the wording in Req #3 which states: “*Each Transmission Owner shall have a documented risk assessment methodology for evaluating the loss of each **applicable** Transmission station or Transmission substation identified in Requirement R1.*”
- Does this mean that requirements 7 through 10 apply to proximate stations if the fault on the proximate station leads to instability, uncontrolled separation, or Cascading within an Interconnection?
- For proximate stations, it is required to identify them and apply a fault on them. For the risk assessment, what specifically needs to be done for the proximate stations?

e) Please clarify whether, at the end of the 36-month period, the entity is required to have initiated or completed the Risk Assessment. We recommend separating the operational assessment and security assessment into distinct components within the timeline to reduce confusion, rather than referring to both collectively as the “risk assessment.”

Likes 0	
Dislikes 0	

Response

Josh Schumacher - Black Hills Corporation - 6, Group Name Black Hills Corporation Segments 1, 3, 5, 6

Answer	No
Document Name	

Comment

Black Hills Corporation agrees with EEI’s recommended changes to the language in Requirement R5. This change makes it clear which proximate Transmission stations and Transmission substations should be included in the scope for all requirements. The current language could cause confusion as to which proximate Transmission station/substations need to be included for each requirement, thus expanding the scope of the standard further than is intended. Black Hills Corporation also agrees with EEI’s suggestion to add information to the technical rationale for scenarios where a risk assessment demonstrates a previously applicable substation no longer is, and what actions to take when security measures are no longer required for a specific substation.

Likes 0	
Dislikes 0	

Response

Misty Carneal - Duke Energy - 1,3,5,6 - Texas RE,SERC,RF	
Answer	No
Document Name	
Comment	
Duke Energy supports EEI’s recommendation that the Drafting Team replace "should" in the last sentence of paragraph one with "shall".	
Likes 0	
Dislikes 0	
Response	
Steven Belle - Dominion - Dominion Virginia Power - 1	
Answer	No
Document Name	
Comment	
Dominion supports EEI's comments.	
Likes 0	
Dislikes 0	
Response	
Chantal Mazza - Chantal Mazza On Behalf of: Junji Yamaguchi, Hydro-Quebec (HQ), 1, 5; Nicolas Turcotte, Hydro-Quebec (HQ), 1, 5; - Chantal Mazza	
Answer	No
Document Name	
Comment	
R5. Please clarify whether, at the end of the 36-month period, the entity is required to have initiated or completed the Risk Assessment. NPCC RSC recommends separating the operational assessment and security assessment into distinct components within the timeline to reduce confusion, rather than referring to both collectively as the “risk assessment.” In the final sentence of R5, the phrase “they should also be included in the risk assessment” raises a question: does this imply that proximate Transmission station(s) and Transmission substation(s) are optional in the risk assessment?	
Likes 0	
Dislikes 0	

Response	
Alan Kloster - Alan Kloster On Behalf of: Jeremy Harris, Evergy, 3, 5, 1, 6; Kevin Frick, Evergy, 3, 5, 1, 6; Marcus Moor, Evergy, 3, 5, 1, 6; Tiffany Lake, Evergy, 3, 5, 1, 6; - Alan Kloster	
Answer	No
Document Name	
Comment	
Evergy supports and incorporates by reference the comments of the Edison Electric Institute for question #5.	
Likes 0	
Dislikes 0	
Response	
Jamison Cawley - Nebraska Public Power District - 1	
Answer	No
Document Name	
Comment	
“Rendered inoperable” should be eliminated from this standard. This term has no definition and leads the RE to move toward a requirement to study the “Smoking Crater” scenario. There has been no documented “Smoking Crater” scenario documented on US soil at a BES substation and to force TO’s to develop fault scenarios for an unrealistic event is unreasonable.	
Likes 1	Nebraska Public Power District, 5, Bender Ronald
Dislikes 0	
Response	
Zahid Qayyum - New York Power Authority - 5	
Answer	No
Document Name	
Comment	
NYPA supports NPCC RSC comments.	
Likes 0	
Dislikes 0	

Response	
Ben Hammer - Western Area Power Administration - 1	
Answer	No
Document Name	
Comment	

Recommend removing “including any Transmission station(s) and Transmission substation(s) identified in accordance with Requirement R4. If proximate Transmission station(s) and Transmission substation(s) were identified in Requirement R2, they should also be included in the risk assessment.” from R5.

Rational for removing:

This language is redundant because the inclusion of proximate substations within the risk assessment methodology is already established by the previous Requirements (R2 and R3.3.2) and therefore will inherently be included in the risk assessment. Adding this to Requirement R5 could potentially add confusion. Proximate substations, irrespective of ownership, must be included in the risk assessments; but Requirement R5 is talking about performing the risk assessment and identifying the applicable stations (owned by the TO performing the Risk Assessment) from Requirement R1 that could result in instability, uncontrolled separation, or Cascading within an Interconnection…

Proximate substations owned by different TOs could have different Methodologies. A proximate substation not owned by the TO performing the risk assessment cannot be identified as “critical – that if rendered inoperable or damaged could result in instability, uncontrolled separation, or Cascading” by that TO, even though the proximate substations will be included within the risk assessment based on Requirements R2 and R3. If this redundant language isn’t removed, it could add confusion around this.

The language pointing back to Requirement R4: “...including any Transmission stations(s) and Transmission substation(s) identified in accordance with Requirement R4.” is also not needed and redundant. It doesn’t add confusion in the way the reference back to proximate substations does, but it is still unnecessary. Requirement R4 talks about coordinating the responsibilities if there are BES Elements owned by multiple TOs within a substation already identified in Requirement R1. **The list of substations identified by Requirement R1 are the “superset” and therefore all that is needed in Requirement R5 is point back to R1** (not R4).

Likes 0	
Dislikes 0	
Response	
Ruida Shu - Northeast Power Coordinating Council - 10, Group Name NPCC RSC	
Answer	No
Document Name	
Comment	

R5. Please clarify whether, at the end of the 36-month period, the entity is required to have initiated or completed the Risk Assessment. NPCC RSC recommends separating the operational assessment and security assessment into distinct components within the timeline to reduce confusion, rather than referring to both collectively as the “risk assessment.”

In the final sentence of R5, the phrase “they should also be included in the risk assessment” raises a question: does this imply that proximate Transmission station(s) and Transmission substation(s) are optional in the risk assessment?	
Likes 0	
Dislikes 0	
Response	
Nick Leathers - Nick Leathers On Behalf of: David Jendras Sr, Ameren - Ameren Services, 3, 6, 1; - Nick Leathers	
Answer	No
Document Name	
Comment	
Ameren agrees with EEI's comments.	
Likes 0	
Dislikes 0	
Response	
Selene Willis - Edison International - Southern California Edison Company - 5	
Answer	No
Document Name	
Comment	
"Please see EEI Comments"	
Likes 0	
Dislikes 0	
Response	
Hillary Creurer - Allete - Minnesota Power, Inc. - 1	
Answer	No
Document Name	
Comment	
Minnesota Power supports EEI’s comments.	

Likes 0	
Dislikes 0	

Response

Kristine Martz - Edison Electric Institute - NA - Not Applicable - NA - Not Applicable

Answer	No
Document Name	

Comment

EEI suggests the following revisions to Requirement R5.

The revised draft CIP-014-4 Requirement R5 includes a new statement: “If proximate Transmission station(s) and Transmission substation(s) were identified in Requirement R2, they should also be included in the risk assessment.” EEI suggests removing this sentence because Requirement R5 already requires TOs to perform a risk assessment using the methodology established in Requirement R3, and Requirement R3 part 3.3.2 includes Transmission station(s) and Transmission substation(s) determined in accordance with Requirement R2 as being in proximity to an applicable Transmission station or Transmission substation.

Additionally, including a separate reference to “proximate Transmission station(s) and Transmission substation(s)… identified in Requirement R2” in Requirement R5, could be confused for an expansion in scope because, as written, the reference is to identified proximate Transmission station(s) and Transmission substation(s) in Requirement R2, not those that are identified through the performance of the Requirement R5 risk assessment. The scope of Requirement R5 is important because of its tie to Requirements R8-R10.

EEI suggests the following:

R5. At least once every 36 calendar months, each Transmission Owner shall perform a risk assessment to identify applicable Transmission station(s) and Transmission substation(s) identified in Requirement R1, that if rendered inoperable or damaged could result in instability, uncontrolled separation, or Cascading within an interconnection, using the methodology established in Requirement R3, including any Transmission station(s) and Transmission substation(s) identified in accordance with Requirement R4.

EEI also asks the drafting team to consider adding information to the technical rationale discussing scenarios where a new risk assessment demonstrates that a substation is no longer applicable to CIP-014, but a previous physical security plan includes security measures with future due dates. The technical rationale could include discussion of actions to take when security measures are no longer required for the de-classified transmission substation(s).

Likes 0	
Dislikes 0	

Response

Joseph Scott - Lower Colorado River Authority - 5

Answer	No
Document Name	

Comment

We do not agree with the changes to R5 as currently written. Please see our responses to question 2 and 3. We share the same concerns regarding data availability, regional boundaries, and practicality of assessing proximate substations outside of our control.

Likes 0	
Dislikes 0	

Response

Gail Elliott - Gail Elliott On Behalf of: Michael Moltane, International Transmission Company Holdings Corporation, 1; - Gail Elliott

Answer	No
Document Name	

Comment

For 5.1, failure to perform the entirety of the risk assessment could have an TO not completing either the stability of steady state portion of the study. If the third party reviewer identified a mistake in the piece of the study that was completed, they have nothing to verify for the second half of the study as it was not performed. Changes to the system which add resiliency to the system may have changed a previous critical station to a non-critical station. Not studying it going forward means that the costs would continue to be incurred for protecting a station that does not require it.

ITC also suggests the following revisions to Requirement R5.

The revised draft CIP-014-4 Requirement R5 includes a new statement: “If proximate Transmission station(s) and Transmission substation(s) were identified in Requirement R2, they should also be included in the risk assessment.” EEI suggests removing this sentence because Requirement R5 already requires TOs to perform a risk assessment using the methodology established in Requirement R3, and Requirement R3 part 3.3.2 includes Transmission station(s) and Transmission substation(s) determined in accordance with Requirement R2 as being in proximity to an applicable Transmission station or Transmission substation.

Additionally, including the separate reference to “proximate Transmission station(s) and Transmission substation(s)… identified in Requirement R2” in Requirement R5, could be confused for an expansion in scope because, as written, the reference is to identified proximate Transmission station(s) and Transmission substation(s) in Requirement R2, not those that are identified through the performance of the Requirement R5 risk assessment. Furthermore R4 should not be included in R5. Only stations identified in R1 need to be reviewed to determine if they are jointly owned. R4 should only identify those stations identified in R1 that an entity would no longer need to study as the other joint owner will be performing it. The scope of Requirement R5 is important because of its tie to Requirements R8-R10.

ITC suggests the following:

R5. At least once every 36 calendar months, each Transmission Owner shall perform a risk assessment to identify applicable Transmission station(s) and Transmission substation(s) identified in Requirement R1, that if rendered inoperable or damaged could result in instability, uncontrolled separation, or Cascading within an interconnection, using the methodology established in Requirement R3, excluding any Transmission station(s) and Transmission substation(s) identified in accordance with Requirement R4 to be reviewed by the entity identified in R4.. If proximate Transmission station(s) and Transmission substation(s) were identified in Requirement R2, they should also be included in the risk assessment.”

Likes 0	
Dislikes 0	

Response

Wesley Maurer - Lower Colorado River Authority - 1 - Texas RE	
Answer	No
Document Name	
Comment	
We do not agree with the changes to R5 as currently written. Please see our responses to question 2 and 3. We share the same concerns regarding data availability, regional boundaries, and practicality of assessing proximate substations outside of our control.	
Likes 0	
Dislikes 0	
Response	

Elizabeth Davis - Elizabeth Davis On Behalf of: Thomas Foster, PJM Interconnection, L.L.C., 2; - Elizabeth Davis	
Answer	No
Document Name	
Comment	
PJM does not recommend relying on past risk assessments, and instead recommends status quo to ensure a more accurate assessment of the Transmission station or Transmission substations. This is based on PJM's observation of major planning assumption changes in recent years that have been impacting reliability analysis.	
Likes 0	
Dislikes 0	
Response	

Robert Blackney - Edison International - Southern California Edison Company - 1	
Answer	No
Document Name	
Comment	
See comments submitted by Edison Electric Institute.	
Likes 0	
Dislikes 0	
Response	

Emma Halilovic - Hydro One Networks, Inc. - 1	
Answer	No
Document Name	2023-06 Draft_3_Comment_Form.docx
Comment	
Modify to suite the recommendation given in the attached.	
Likes 0	
Dislikes 0	
Response	

Melanie Wong - Seminole Electric Cooperative, Inc. - 5	
Answer	No
Document Name	
Comment	
Likes 0	
Dislikes 0	
Response	

Amy Wilke - American Transmission Company, LLC - 1	
Answer	Yes
Document Name	
Comment	
ATC agrees with MRO NSRF comments.	
Likes 0	
Dislikes 0	
Response	

Andrew Smith - APS - Arizona Public Service Co. - 5	
Answer	Yes
Document Name	

Comment	
AZPS agrees with comments submitted by EEI on behalf of their members to request a sub bullet be added to include clarification around Requirement 9.3 if the substation is no longer classified as critical based on a new risk assessment.	
Likes 0	
Dislikes 0	
Response	
Randy Peters - Manitoba Hydro - 1,3,5,6 - MRO	
Answer	Yes
Document Name	
Comment	
It would be nice to add a clear requirement (5.4) that the previous risk assessment can also be used if there have been no significant changes to the network in the 3 years since the previous assessment	
Likes 0	
Dislikes 0	
Response	
Matt Carden - Southern Company - Southern Company Services, Inc. - 1	
Answer	Yes
Document Name	
Comment	
Southern Company agrees with Requirement R5 but recommends removing the language added in Draft 3 “If proximate Transmission station(s) and Transmission substation(s) were identified in Requirement R2, they should also be included in the risk assessment”. This is addressed in the methodology required per Requirement R3.3 and could lead to misinterpretations of the scope of Requirement R5.	
Likes 0	
Dislikes 0	
Response	
Timothy Singh - Timothy Singh On Behalf of: Israel Perez, Salt River Project, 3, 6, 5, 1; Laura Somak, Salt River Project, 3, 6, 5, 1; Mathew Weber, Salt River Project, 3, 6, 5, 1; Matthew Jaramilla, Salt River Project, 3, 6, 5, 1; - Timothy Singh	
Answer	Yes

Document Name	
Comment	
SRP agrees with Requirement R5 addressing that risk assessments are performed every 36 months.	
Likes 0	
Dislikes 0	
Response	
Rebika Yitna - Rebika Yitna On Behalf of: Roger Brand, MEAG Power, 3, 1; - Rebika Yitna	
Answer	Yes
Document Name	
Comment	
Clarification/Additonal Information requested: What is the Drafting Team expectation for physically protecting proximate stations owned by the entity? Are they to be treated the same as the applicable stations? What about protection of the proximate station if it is owned by another entity?	
Likes 0	
Dislikes 0	
Response	
Robert Follini - Avista - Avista Corporation - 3	
Answer	Yes
Document Name	
Comment	
The remove of the ability to allow 60 calendar months for subsequent risk assessments when previous risk assessments did not identify any Transmission stations or Transmission substations tha if rendered inoperable or damaged could result in instability, uncontrolled separation, or Cascading within an Interconnection is not adequalety justified. The Technical Rational only states “…to reduce the periodicity options from previous versions…”	
Likes 0	
Dislikes 0	
Response	
Dan Perry - TXNM Energy - 1,3,5 - WECC,Texas RE	
Answer	Yes

Document Name	
Comment	
TXNM Energy agrees with EEI comments	
Likes 0	
Dislikes 0	
Response	
Lucinda Bradshaw - Lucinda Bradshaw On Behalf of: Byron Booker, Oncor Electric Delivery, 1; - Lucinda Bradshaw	
Answer	Yes
Document Name	
Comment	
N/A	
Likes 0	
Dislikes 0	
Response	
Monika Montez - California ISO - 2 - WECC, Group Name ISO/RTO Council Standards Review Committee (SRC)	
Answer	Yes
Document Name	
Comment	
The ISO/RTO Council (IRC) Standards Review Committee (SRC) agrees that the SAR provides clarity.	
Likes 0	
Dislikes 0	
Response	
Kennedy Meier - Electric Reliability Council of Texas, Inc. - 2	
Answer	Yes
Document Name	
Comment	

ERCOT joins the comments submitted by the IRC SRC and adopts them as its own.

Likes 0	
Dislikes 0	

Response

Daniel Gacek - Exelon - 1, Group Name Exelon

Answer	Yes
Document Name	

Comment

As stated in our response to Questions 3 above:

To reduce the burden on smaller TOs of developing an R3 methodology and performing the R5 planning studies, consider providing an option for entities to use the list of transmission stations or substations obtained from the Attachment 1 analysis, as the input to R7 for primary control center determination, and as the input to R8 to begin the physical attack evaluation. Attachment 1 would therefore be an option as the R3 methodology that would then be applied in R5. R4 would still be required. The R6 third party review would be limited to a review of the Attachment 1 analysis.

Likes 0	
Dislikes 0	

Response

Alison Nickells - NiSource - Northern Indiana Public Service Co. - 1

Answer	Yes
Document Name	

Comment

Likes 0	
Dislikes 0	

Response

Sean Steffensen - IDACORP - Idaho Power Company - 1

Answer	Yes
Document Name	

Comment

Likes 0	
Dislikes 0	
Response	
Kevin Conway - Western Power Pool - 4	
Answer	Yes
Document Name	
Comment	
Likes 0	
Dislikes 0	
Response	
Tamarra Hardie - Public Utility District No. 1 of Chelan County - 6, Group Name CHPD	
Answer	Yes
Document Name	
Comment	
Likes 0	
Dislikes 0	
Response	
Anna Martinson - MRO - 1,2,3,4,5,6 - MRO, Group Name MRO Group	
Answer	Yes
Document Name	
Comment	
Likes 0	
Dislikes 0	
Response	

Amy Key - Berkshire Hathaway Energy - MidAmerican Energy Co. - 3	
Answer	Yes
Document Name	
Comment	
Likes 0	
Dislikes 0	
Response	
James Keele - Entergy - 3	
Answer	Yes
Document Name	
Comment	
Likes 0	
Dislikes 0	
Response	
Thomas Breen - Berkshire Hathaway Energy - MidAmerican Energy Co. - 1	
Answer	Yes
Document Name	
Comment	
Likes 0	
Dislikes 0	
Response	
Darko Kovac, P.E. - Gainesville Regional Utilities - 1,3,5	
Answer	Yes
Document Name	
Comment	

Likes 0	
Dislikes 0	
Response	
Tim Kelley - Tim Kelley On Behalf of: Charles Norton, Sacramento Municipal Utility District, 3, 6, 4, 1, 5; Foung Mua, Sacramento Municipal Utility District, 3, 6, 4, 1, 5; Kevin Smith, Balancing Authority of Northern California, 1; Nicole Looney, Sacramento Municipal Utility District, 3, 6, 4, 1, 5; Ryder Couch, Sacramento Municipal Utility District, 3, 6, 4, 1, 5; Wei Shao, Sacramento Municipal Utility District, 3, 6, 4, 1, 5; - Tim Kelley, Group Name SMUD and BANC	
Answer	Yes
Document Name	
Comment	
Likes 0	
Dislikes 0	
Response	
Donna Wood - Tri-State G and T Association, Inc. - 1	
Answer	Yes
Document Name	
Comment	
Likes 0	
Dislikes 0	
Response	
Greg Sorenson - Greg Sorenson On Behalf of: Tremayne Brown, ReliabilityFirst , 10; - Greg Sorenson	
Answer	Yes
Document Name	
Comment	
Likes 0	
Dislikes 0	
Response	

Jodi Yeary - AEP - 3	
Answer	Yes
Document Name	
Comment	
Likes 0	
Dislikes 0	
Response	
Brian Millard - Tennessee Valley Authority - 1,3,5,6 - SERC, Group Name TVA RBB	
Answer	Yes
Document Name	
Comment	
Likes 0	
Dislikes 0	
Response	
Phillip Martinez - Phillip Martinez On Behalf of: Richard Jackson, U.S. Bureau of Reclamation, 1, 5; - U.S. Bureau of Reclamation - 1 - WECC	
Answer	Yes
Document Name	
Comment	
Likes 0	
Dislikes 0	
Response	
Dermot Smyth - Con Ed - Consolidated Edison Co. of New York - 1, Group Name Con Edison	
Answer	Yes
Document Name	
Comment	

Likes 0	
Dislikes 0	
Response	
Dave Krueger - SERC Reliability Corporation - 10	
Answer	Yes
Document Name	
Comment	
Likes 0	
Dislikes 0	
Response	
Jason Chandler - Con Ed - Consolidated Edison Co. of New York - 6	
Answer	Yes
Document Name	
Comment	
Likes 0	
Dislikes 0	
Response	
Wendy Kalidass - U.S. Bureau of Reclamation - 5	
Answer	Yes
Document Name	
Comment	
Likes 0	
Dislikes 0	
Response	

Lincoln Burton - Con Ed - Consolidated Edison Co. of New York - 3	
Answer	Yes
Document Name	
Comment	
Likes 0	
Dislikes 0	
Response	
Rachel Coyne - Texas Reliability Entity, Inc. - 10	
Answer	Yes
Document Name	
Comment	
Likes 0	
Dislikes 0	
Response	
Mark Flanary - Midwest Reliability Organization - 10	
Answer	Yes
Document Name	
Comment	
Likes 0	
Dislikes 0	
Response	
Michelle Pagano - Con Ed - Consolidated Edison Co. of New York - 5	
Answer	Yes
Document Name	
Comment	

Likes 0	
Dislikes 0	
Response	
Chris Wagner - Santee Cooper - 1, Group Name Santee Cooper	
Answer	Yes
Document Name	
Comment	
Likes 0	
Dislikes 0	
Response	
Richard Vendetti - NextEra Energy - 5	
Answer	Yes
Document Name	
Comment	
Likes 0	
Dislikes 0	
Response	
Carver Powers - Utility Services, Inc. - 4	
Answer	Yes
Document Name	
Comment	
Likes 0	
Dislikes 0	
Response	
Kelley Sargent - Puget Sound Energy, Inc. - 3	

Answer	Yes
Document Name	
Comment	
Likes 0	
Dislikes 0	
Response	
Jennie Wike - Jennie Wike On Behalf of: John Merrell, Tacoma Public Utilities (Tacoma, WA), 1, 4, 5, 6, 3; - Jennie Wike, Group Name Tacoma Power	
Answer	Yes
Document Name	
Comment	
Likes 0	
Dislikes 0	
Response	
Lexi Dobrzysnki - Lexi Dobrzysnki On Behalf of: Angela Dockter, Alliant Energy Corporation Services, Inc., 4; - Lexi Dobrzysnki	
Answer	
Document Name	
Comment	
Alliant Energy mirrors the MRO NSRF group Comments.	
Likes 0	
Dislikes 0	
Response	

6. Do you agree with the Implementation Plan for CIP-014-4? If you think an alternate timeframe is needed, please propose an alternate implementation plan with a detailed explanation.

Gail Elliott - Gail Elliott On Behalf of: Michael Moltane, International Transmission Company Holdings Corporation, 1; - Gail Elliott

Answer	No
Document Name	

Comment

ITC believes there could be issues with identifying all of the proximity stations soon enough to identify their configurations and clearing times soon enough to perform all of the required studies. This is more of an issue as entities add facilities in additional states. The number of coordination agreements could also cause an issue in obtaining all of the required documentation.

Likes 0	
Dislikes 0	

Response

Richard Vendetti - NextEra Energy - 5

Answer	No
Document Name	

Comment

Nextera supports EEI comments below:

EEI is concerned that the implementation plan requires the initial risk assessment required by CIP-014-4 to be completed on or before the effective date of the Standard and does not provide a phased in approach. The modifications required by the proposed CIP-014-4 include new processes to be established prior to initiating new risk assessments. The proposed 24-month timeline is not reasonable for completing the initial risk assessment. EEI suggests allowing the initiation of CIP-014-4 risk assessments to occur on or before the effective date of the standard to allow additional time to modify programs.

Likes 0	
Dislikes 0	

Response

Rebika Yitna - Rebika Yitna On Behalf of: Roger Brand, MEAG Power, 3, 1; - Rebika Yitna

Answer	No
Document Name	

Comment

Due to the varying risk assessment schedules of entities, the 24 month implementation plan could burden entities who have completed a risk assessment shortly before the effective date of CIP-014-4 and have limited resources to complete another one in a short amount of time. Proposed language: 36 months from the entity's last risk assessment completed or 36 months after the effective date of the standard, which ever is later. This will provide adequate time for entities to adjust to the additional criteria for the risk assessment methodology.

Likes 0	
Dislikes 0	

Response

Jamison Cawley - Nebraska Public Power District - 1

Answer	No
Document Name	

Comment

The requirements for an unaffiliated third-party verification of the TO's risk assessment should be removed entirely. This requirement has increased the cost, time and resources required for each TO to perform the risk assessment. We have found that the third-party verification is not used by the RE for any compliance enforcement actions. If the third-party verification provides no value to this process, it should not be included in the CIP-014 requirements. If the 36-month RA requirement is approved, this issue will only become more burdensome.

Likes 1	Nebraska Public Power District, 5, Bender Ronald
Dislikes 0	

Response

Matt Carden - Southern Company - Southern Company Services, Inc. - 1

Answer	No
Document Name	

Comment

It potentially could be excessively burdensome on a Transmission Owner (TO) to be required to perform a new risk assessment study within 24 months of the effective implementation date of the revised CIP-014-4 standard. Additionally, limited resources may be available to complete a verification within 90 days of the effective date per Requirement R6.

For example, given the current CIP-014-3 R1.1 30 calendar month subsequent risk assessment requirement schedule for a TO which has substations identified under R1, the TO may currently be required to complete a subsequent R1 study as of September 30, 2025.

If the revised standard has an effective implementation date of October 1, 2025, the TO would be required to complete a new R1 study within 24 months of October 1, 2025. A more effective and efficient methodology is a phased approach based on the TO's completion date of the TO's most recent R1.1 subsequent risk assessment study.

Proposed Language: Each TO shall conduct its first assessment under CIP-014-4 within 36 calendar months after the effective date or within 36 calendar months after their last assessment under CIP-014-3, whichever occurs later.

Likes 0	
Dislikes 0	

Response

Jodi Yeary - AEP - 3

Answer	No
Document Name	

Comment

The implementation plan accelerates the compliance timeframe specified in the standard. The proposed implementation plan is 24 months. This means some Transmission Owners may have insufficient time, less than 36 months, to complete their next assessment based on the new standard. The implementation plan should be adjusted to 36 months.

Likes 0	
Dislikes 0	

Response

Nikki Carson-Marquis - Nikki Carson-Marquis On Behalf of: Theresa Allard, Minnkota Power Cooperative Inc., 1; - Nikki Carson-Marquis

Answer	No
Document Name	

Comment

MPC holds the position that requiring completion of a CIP-014-4 risk assessment prior to the effective date of the Standard presents duplicative efforts coupled with limited study resources. MPC suggests that entities with a completed risk assessment per CIP-014-3 be required to follow the new assessment frequency once the Standard becomes effective in accordance with R5.

Likes 0	
Dislikes 0	

Response

Mark Garza - FirstEnergy - FirstEnergy Corporation - 4, Group Name FE Voter

Answer	No
Document Name	

Comment

Until clarification of R5 pertaining to alignment of dual ownership is made, FirstEnergy cannot support the Implementation Plan.

Likes 0	
Dislikes 0	

Response

Stephen Stafford - Stephen Stafford On Behalf of: Greg Davis, Georgia Transmission Corporation, 1; - Stephen Stafford

Answer	No
Document Name	

Comment

There should be some period of time after the standard becomes effective before the initial risk assessment should be completed. The recommendation is within 24 months following the effective date of this standard.

Likes 0	
Dislikes 0	

Response

Ronald Hoover - Bonneville Power Administration - 1,3,5,6 - WECC

Answer	No
Document Name	

Comment

BPA repeats it recommendation to use terminology like that found in other standards such as FAC-014-3 R6:

“Requirement R6 shall be implemented by the Planning Coordinator or Transmission Planner following the effective date of FAC-014-3 when it begins its next cycle for conducting the studies to support its Planning Assessment."

BPA believes the inclusion of this language would alleviate concerns about having to comply with a requirement prior to its mandatory enforcement date and help to reduce overall costs for the implementation of the changes.

Likes 0	
Dislikes 0	

Response

Melanie Wong - Seminole Electric Cooperative, Inc. - 5

Answer	No

Document Name	
Comment	
Likes 0	
Dislikes 0	
Response	
Robert Blackney - Edison International - Southern California Edison Company - 1	
Answer	Yes
Document Name	
Comment	
See comments submitted by Edison Electric Institute.	
Likes 0	
Dislikes 0	
Response	
Lucinda Bradshaw - Lucinda Bradshaw On Behalf of: Byron Booker, Oncor Electric Delivery, 1; - Lucinda Bradshaw	
Answer	Yes
Document Name	
Comment	
N/A	
Likes 0	
Dislikes 0	
Response	
Kristine Martz - Edison Electric Institute - NA - Not Applicable - NA - Not Applicable	
Answer	Yes
Document Name	
Comment	

EEI agrees with the Implementation Plan for CIP-014-4, however, we note that there are additional revisions to CIP-014 that are part of Project 2021-03 to address IROLs. It would be beneficial to align the timelines in the implementation plans for these projects if possible.

Likes 0	
Dislikes 0	

Response

Hillary Creurer - Allete - Minnesota Power, Inc. - 1

Answer	Yes
Document Name	

Comment

Minnesota Power supports EEI's comments.

Likes 0	
Dislikes 0	

Response

Chris Wagner - Santee Cooper - 1, Group Name Santee Cooper

Answer	Yes
Document Name	

Comment

No significant differences from previous draft that require additional comment.

Likes 0	
Dislikes 0	

Response

Selene Willis - Edison International - Southern California Edison Company - 5

Answer	Yes
Document Name	

Comment

"Please see EEI Comments"

Likes 0	
Dislikes 0	
Response	
Nick Leathers - Nick Leathers On Behalf of: David Jendras Sr, Ameren - Ameren Services, 3, 6, 1; - Nick Leathers	
Answer	Yes
Document Name	
Comment	
Ameren agrees with EEI's comments.	
Likes 0	
Dislikes 0	
Response	
Misty Carneal - Duke Energy - 1,3,5,6 - Texas RE,SERC,RF	
Answer	Yes
Document Name	
Comment	
Duke Energy agrees with the Implementation Plan.	
Likes 0	
Dislikes 0	
Response	
Josh Schumacher - Black Hills Corporation - 6, Group Name Black Hills Corporation Segments 1, 3, 5, 6	
Answer	Yes
Document Name	
Comment	
Black Hills Corporation agrees with the implementation plan for CIP-014-4, but in agreement with EEI, we think it would be beneficial to align the timelines of the implementation plans with the implementation plan for additional changes to CIP-014-4 that are part of Project 2021-03.	
Likes 0	
Dislikes 0	

Response	
Andrew Smith - APS - Arizona Public Service Co. - 5	
Answer	Yes
Document Name	
Comment	
AZPS agrees with the Implementation Plan	
Likes 0	
Dislikes 0	
Response	
Amy Wilke - American Transmission Company, LLC - 1	
Answer	Yes
Document Name	
Comment	
ATC agrees with MRO NSRF comments.	
Likes 0	
Dislikes 0	
Response	
Daniel Gacek - Exelon - 1, Group Name Exelon	
Answer	Yes
Document Name	
Comment	
Likes 0	
Dislikes 0	
Response	
Kennedy Meier - Electric Reliability Council of Texas, Inc. - 2	

Answer	Yes
Document Name	
Comment	
Likes 0	
Dislikes 0	
Response	
Jennie Wike - Jennie Wike On Behalf of: John Merrell, Tacoma Public Utilities (Tacoma, WA), 1, 4, 5, 6, 3; - Jennie Wike, Group Name Tacoma Power	
Answer	Yes
Document Name	
Comment	
Likes 0	
Dislikes 0	
Response	
Monika Montez - California ISO - 2 - WECC, Group Name ISO/RTO Council Standards Review Committee (SRC)	
Answer	Yes
Document Name	
Comment	
Likes 0	
Dislikes 0	
Response	
Kelley Sargent - Puget Sound Energy, Inc. - 3	
Answer	Yes
Document Name	
Comment	

Likes 0	
Dislikes 0	
Response	
Carver Powers - Utility Services, Inc. - 4	
Answer	Yes
Document Name	
Comment	
Likes 0	
Dislikes 0	
Response	
Dan Perry - TXNM Energy - 1,3,5 - WECC,Texas RE	
Answer	Yes
Document Name	
Comment	
Likes 0	
Dislikes 0	
Response	
Wesley Maurer - Lower Colorado River Authority - 1 - Texas RE	
Answer	Yes
Document Name	
Comment	
Likes 0	
Dislikes 0	
Response	
Joseph Scott - Lower Colorado River Authority - 5	

Answer	Yes
Document Name	
Comment	
Likes 0	
Dislikes 0	
Response	
Robert Follini - Avista - Avista Corporation - 3	
Answer	Yes
Document Name	
Comment	
Likes 0	
Dislikes 0	
Response	
Ruida Shu - Northeast Power Coordinating Council - 10, Group Name NPCC RSC	
Answer	Yes
Document Name	
Comment	
Likes 0	
Dislikes 0	
Response	
Ben Hammer - Western Area Power Administration - 1	
Answer	Yes
Document Name	
Comment	
Likes 0	

Dislikes 0	
Response	
Michelle Pagano - Con Ed - Consolidated Edison Co. of New York - 5	
Answer	Yes
Document Name	
Comment	
Likes 0	
Dislikes 0	
Response	
Zahid Qayyum - New York Power Authority - 5	
Answer	Yes
Document Name	
Comment	
Likes 0	
Dislikes 0	
Response	
Mark Flanary - Midwest Reliability Organization - 10	
Answer	Yes
Document Name	
Comment	
Likes 0	
Dislikes 0	
Response	
Timothy Singh - Timothy Singh On Behalf of: Israel Perez, Salt River Project, 3, 6, 5, 1; Laura Somak, Salt River Project, 3, 6, 5, 1; Mathew Weber, Salt River Project, 3, 6, 5, 1; Matthew Jaramilla, Salt River Project, 3, 6, 5, 1; - Timothy Singh	

Answer	Yes
Document Name	
Comment	
Likes 0	
Dislikes 0	
Response	
Alan Kloster - Alan Kloster On Behalf of: Jeremy Harris, Evergy, 3, 5, 1, 6; Kevin Frick, Evergy, 3, 5, 1, 6; Marcus Moor, Evergy, 3, 5, 1, 6; Tiffany Lake, Evergy, 3, 5, 1, 6; - Alan Kloster	
Answer	Yes
Document Name	
Comment	
Likes 0	
Dislikes 0	
Response	
Lincoln Burton - Con Ed - Consolidated Edison Co. of New York - 3	
Answer	Yes
Document Name	
Comment	
Likes 0	
Dislikes 0	
Response	
Chantal Mazza - Chantal Mazza On Behalf of: Junji Yamaguchi, Hydro-Quebec (HQ), 1, 5; Nicolas Turcotte, Hydro-Quebec (HQ), 1, 5; - Chantal Mazza	
Answer	Yes
Document Name	
Comment	

Likes 0	
Dislikes 0	
Response	
Wendy Kalidass - U.S. Bureau of Reclamation - 5	
Answer	Yes
Document Name	
Comment	
Likes 0	
Dislikes 0	
Response	
Jason Chandler - Con Ed - Consolidated Edison Co. of New York - 6	
Answer	Yes
Document Name	
Comment	
Likes 0	
Dislikes 0	
Response	
Steven Belle - Dominion - Dominion Virginia Power - 1	
Answer	Yes
Document Name	
Comment	
Likes 0	
Dislikes 0	
Response	
Dave Krueger - SERC Reliability Corporation - 10	

Answer	Yes
Document Name	
Comment	
Likes 0	
Dislikes 0	
Response	
Dermot Smyth - Con Ed - Consolidated Edison Co. of New York - 1, Group Name Con Edison	
Answer	Yes
Document Name	
Comment	
Likes 0	
Dislikes 0	
Response	
Phillip Martinez - Phillip Martinez On Behalf of: Richard Jackson, U.S. Bureau of Reclamation, 1, 5; - U.S. Bureau of Reclamation - 1 - WECC	
Answer	Yes
Document Name	
Comment	
Likes 0	
Dislikes 0	
Response	
Brian Millard - Tennessee Valley Authority - 1,3,5,6 - SERC, Group Name TVA RBB	
Answer	Yes
Document Name	
Comment	
Likes 0	

Dislikes 0	
Response	
Isidoro Behar - Long Island Power Authority - 1	
Answer	Yes
Document Name	
Comment	
Likes 0	
Dislikes 0	
Response	
David Melanson - NB Power Corporation - New Brunswick Power Transmission Corporation - 5	
Answer	Yes
Document Name	
Comment	
Likes 0	
Dislikes 0	
Response	
Bob Cardle - Bob Cardle On Behalf of: Marco Rios, Pacific Gas and Electric Company, 3, 1, 5; Sandra Ellis, Pacific Gas and Electric Company, 3, 1, 5; Tyler Brun, Pacific Gas and Electric Company, 3, 1, 5; - Bob Cardle	
Answer	Yes
Document Name	
Comment	
Likes 0	
Dislikes 0	
Response	
Randy Peters - Manitoba Hydro - 1,3,5,6 - MRO	

Answer	Yes
Document Name	
Comment	
Likes 0	
Dislikes 0	
Response	
Greg Sorenson - Greg Sorenson On Behalf of: Tremayne Brown, ReliabilityFirst , 10; - Greg Sorenson	
Answer	Yes
Document Name	
Comment	
Likes 0	
Dislikes 0	
Response	
Donna Wood - Tri-State G and T Association, Inc. - 1	
Answer	Yes
Document Name	
Comment	
Likes 0	
Dislikes 0	
Response	
Tim Kelley - Tim Kelley On Behalf of: Charles Norton, Sacramento Municipal Utility District, 3, 6, 4, 1, 5; Foung Mua, Sacramento Municipal Utility District, 3, 6, 4, 1, 5; Kevin Smith, Balancing Authority of Northern California, 1; Nicole Looney, Sacramento Municipal Utility District, 3, 6, 4, 1, 5; Ryder Couch, Sacramento Municipal Utility District, 3, 6, 4, 1, 5; Wei Shao, Sacramento Municipal Utility District, 3, 6, 4, 1, 5; - Tim Kelley, Group Name SMUD and BANC	
Answer	Yes
Document Name	
Comment	

Likes 0	
Dislikes 0	
Response	
Darko Kovac, P.E. - Gainesville Regional Utilities - 1,3,5	
Answer	Yes
Document Name	
Comment	
Likes 0	
Dislikes 0	
Response	
Thomas Breen - Berkshire Hathaway Energy - MidAmerican Energy Co. - 1	
Answer	Yes
Document Name	
Comment	
Likes 0	
Dislikes 0	
Response	
Jessica Cordero - Unisource - Tucson Electric Power Co. - 1	
Answer	Yes
Document Name	
Comment	
Likes 0	
Dislikes 0	
Response	

James Keele - Entergy - 3	
Answer	Yes
Document Name	
Comment	
Likes 0	
Dislikes 0	
Response	
Amy Key - Berkshire Hathaway Energy - MidAmerican Energy Co. - 3	
Answer	Yes
Document Name	
Comment	
Likes 0	
Dislikes 0	
Response	
Anna Martinson - MRO - 1,2,3,4,5,6 - MRO, Group Name MRO Group	
Answer	Yes
Document Name	
Comment	
Likes 0	
Dislikes 0	
Response	
Tamarra Hardie - Public Utility District No. 1 of Chelan County - 6, Group Name CHPD	
Answer	Yes
Document Name	
Comment	

Likes 0	
Dislikes 0	
Response	
Jeffrey Streifling - NB Power Corporation - 1	
Answer	Yes
Document Name	
Comment	
Likes 0	
Dislikes 0	
Response	
Kevin Conway - Western Power Pool - 4	
Answer	Yes
Document Name	
Comment	
Likes 0	
Dislikes 0	
Response	
Sean Steffensen - IDACORP - Idaho Power Company - 1	
Answer	Yes
Document Name	
Comment	
Likes 0	
Dislikes 0	
Response	
Alison Nickells - NiSource - Northern Indiana Public Service Co. - 1	

Answer	Yes
Document Name	
Comment	
Likes 0	
Dislikes 0	
Response	
Rachel Coyne - Texas Reliability Entity, Inc. - 10	
Answer	
Document Name	
Comment	
Texas RE noticed the retirement date section refers to CIP-014 and it should refer to CIP-014-4.	
Likes 0	
Dislikes 0	
Response	
Lexi Dobrzysnki - Lexi Dobrzysnki On Behalf of: Angela Dockter, Alliant Energy Corporation Services, Inc., 4; - Lexi Dobrzysnki	
Answer	
Document Name	
Comment	
Alliant Energy mirrors the MRO NSRF group Comments.	
Likes 0	
Dislikes 0	
Response	

7. Do you believe there are alternatives or more cost-effective options to address the recommendations in CIP-014-4 to address the reliability issue of physical security? If so, please provide your recommendation and, if appropriate, technical, or procedural justification.

Jeffrey Streifling - NB Power Corporation - 1

Answer	No
Document Name	

Comment

TFIST has a concern with multiple pending standards may overlap due to the delayed approval process may cause increased cost on entities due to multiple implementation plans occurring at the same time.

Likes 0	
Dislikes 0	

Response

Anna Martinson - MRO - 1,2,3,4,5,6 - MRO, Group Name MRO Group

Answer	No
Document Name	

Comment

MRO NSRF does not have any alternatives to propose.

Likes 0	
Dislikes 0	

Response

Amy Key - Berkshire Hathaway Energy - MidAmerican Energy Co. - 3

Answer	No
Document Name	

Comment

MEC supports the comments of the MRO NSRF

Likes 0	
Dislikes 0	

Response

Amy Wilke - American Transmission Company, LLC - 1	
Answer	No
Document Name	
Comment	
ATC agrees with MRO NSRF comments.	
Likes 0	
Dislikes 0	
Response	
Mark Garza - FirstEnergy - FirstEnergy Corporation - 4, Group Name FE Voter	
Answer	No
Document Name	
Comment	
No comments toward cost effectiveness.	
Likes 0	
Dislikes 0	
Response	
David Melanson - NB Power Corporation - New Brunswick Power Transmission Corporation - 5	
Answer	No
Document Name	
Comment	
NB Power supports NPCCs comments: "NPCC RSC is concerned that multiple pending standards may overlap due to delays in the approval process. This could lead to increased costs for entities, as they may be required to implement multiple standards simultaneously. For example, we are particularly concerned about CIP-014 and CIP-002 becoming misaligned or out of sync."	
Likes 0	
Dislikes 0	
Response	

Matt Carden - Southern Company - Southern Company Services, Inc. - 1	
Answer	No
Document Name	
Comment	
Southern Company recognizes the financial impacts of performing the risk assessment every 36 months rather than 60 months for Transmission Owners that have not identified any Transmission stations or Transmission substations. This is magnified by the requirement to have an unaffiliated third party verify the risk assessment at a higher frequency.	
Likes 0	
Dislikes 0	
Response	
Chantal Mazza - Chantal Mazza On Behalf of: Junji Yamaguchi, Hydro-Quebec (HQ), 1, 5; Nicolas Turcotte, Hydro-Quebec (HQ), 1, 5; - Chantal Mazza	
Answer	No
Document Name	
Comment	
NPCC RSC is concerned that multiple pending standards may overlap due to delays in the approval process. This could lead to increased costs for entities, as they may be required to implement multiple standards simultaneously. For example, we are particularly concerned about CIP-014 and CIP-002 becoming misaligned or out of sync.	
Likes 0	
Dislikes 0	
Response	
Zahid Qayyum - New York Power Authority - 5	
Answer	No
Document Name	
Comment	
NYPA supports NPCC RSC comments.	
Likes 0	
Dislikes 0	

Response	
Ruida Shu - Northeast Power Coordinating Council - 10, Group Name NPCC RSC	
Answer	No
Document Name	
Comment	
NPCC RSC is concerned that multiple pending standards may overlap due to delays in the approval process. This could lead to increased costs for entities, as they may be required to implement multiple standards simultaneously. For example, we are particularly concerned about CIP-014 and CIP-002 becoming misaligned or out of sync.	
Likes 0	
Dislikes 0	
Response	
Lucinda Bradshaw - Lucinda Bradshaw On Behalf of: Byron Booker, Oncor Electric Delivery, 1; - Lucinda Bradshaw	
Answer	No
Document Name	
Comment	
The comments above demonstrate that additional clarity is needed on certain portions of this revised CIP-014-4. Without that additional clarity, Oncor cannot state that the proposed changes to CIP-014-3 are cost effective. As noted above, some of the proposed revisions create additional work for TOs that could increase the TOs' costs. For example, the revised Requirements R2 and R4 will require Oncor to develop, document, and implement new procedures and processes, as well as to develop and implement additional training concerning the new requirements and the new procedures and processes.	
Likes 0	
Dislikes 0	
Response	
Alison Nickells - NiSource - Northern Indiana Public Service Co. - 1	
Answer	No
Document Name	
Comment	
Likes 0	

Dislikes 0	
Response	
Sean Steffensen - IDACORP - Idaho Power Company - 1	
Answer	No
Document Name	
Comment	
Likes 0	
Dislikes 0	
Response	
Kevin Conway - Western Power Pool - 4	
Answer	No
Document Name	
Comment	
Likes 0	
Dislikes 0	
Response	
Thomas Breen - Berkshire Hathaway Energy - MidAmerican Energy Co. - 1	
Answer	No
Document Name	
Comment	
Likes 0	
Dislikes 0	
Response	
Tim Kelley - Tim Kelley On Behalf of: Charles Norton, Sacramento Municipal Utility District, 3, 6, 4, 1, 5; Foung Mua, Sacramento Municipal Utility District, 3, 6, 4, 1, 5; Kevin Smith, Balancing Authority of Northern California, 1; Nicole Looney, Sacramento Municipal Utility District, 3,	

6, 4, 1, 5; Ryder Couch, Sacramento Municipal Utility District, 3, 6, 4, 1, 5; Wei Shao, Sacramento Municipal Utility District, 3, 6, 4, 1, 5; - Tim Kelley, Group Name SMUD and BANC	
Answer	No
Document Name	
Comment	
Likes 0	
Dislikes 0	
Response	
Greg Sorenson - Greg Sorenson On Behalf of: Tremayne Brown, ReliabilityFirst , 10; - Greg Sorenson	
Answer	No
Document Name	
Comment	
Likes 0	
Dislikes 0	
Response	
Andrew Smith - APS - Arizona Public Service Co. - 5	
Answer	No
Document Name	
Comment	
Likes 0	
Dislikes 0	
Response	
Randy Peters - Manitoba Hydro - 1,3,5,6 - MRO	
Answer	No
Document Name	
Comment	

Likes 0	
Dislikes 0	
Response	
Phillip Martinez - Phillip Martinez On Behalf of: Richard Jackson, U.S. Bureau of Reclamation, 1, 5; - U.S. Bureau of Reclamation - 1 - WECC	
Answer	No
Document Name	
Comment	
Likes 0	
Dislikes 0	
Response	
Dermot Smyth - Con Ed - Consolidated Edison Co. of New York - 1, Group Name Con Edison	
Answer	No
Document Name	
Comment	
Likes 0	
Dislikes 0	
Response	
Dave Krueger - SERC Reliability Corporation - 10	
Answer	No
Document Name	
Comment	
Likes 0	
Dislikes 0	
Response	

Jason Chandler - Con Ed - Consolidated Edison Co. of New York - 6	
Answer	No
Document Name	
Comment	
Likes 0	
Dislikes 0	
Response	
Wendy Kalidass - U.S. Bureau of Reclamation - 5	
Answer	No
Document Name	
Comment	
Likes 0	
Dislikes 0	
Response	
Lincoln Burton - Con Ed - Consolidated Edison Co. of New York - 3	
Answer	No
Document Name	
Comment	
Likes 0	
Dislikes 0	
Response	
Timothy Singh - Timothy Singh On Behalf of: Israel Perez, Salt River Project, 3, 6, 5, 1; Laura Somak, Salt River Project, 3, 6, 5, 1; Mathew Weber, Salt River Project, 3, 6, 5, 1; Matthew Jaramilla, Salt River Project, 3, 6, 5, 1; - Timothy Singh	
Answer	No
Document Name	
Comment	

Likes 0	
Dislikes 0	
Response	
Michelle Pagano - Con Ed - Consolidated Edison Co. of New York - 5	
Answer	No
Document Name	
Comment	
Likes 0	
Dislikes 0	
Response	
Rebika Yitna - Rebika Yitna On Behalf of: Roger Brand, MEAG Power, 3, 1; - Rebika Yitna	
Answer	No
Document Name	
Comment	
Likes 0	
Dislikes 0	
Response	
Ben Hammer - Western Area Power Administration - 1	
Answer	No
Document Name	
Comment	
Likes 0	
Dislikes 0	
Response	

Robert Follini - Avista - Avista Corporation - 3	
Answer	No
Document Name	
Comment	
Likes 0	
Dislikes 0	
Response	
Hillary Creurer - Allete - Minnesota Power, Inc. - 1	
Answer	No
Document Name	
Comment	
Likes 0	
Dislikes 0	
Response	
Dan Perry - TXNM Energy - 1,3,5 - WECC,Texas RE	
Answer	No
Document Name	
Comment	
Likes 0	
Dislikes 0	
Response	
Melanie Wong - Seminole Electric Cooperative, Inc. - 5	
Answer	No
Document Name	
Comment	

Likes 0	
Dislikes 0	

Response

Ronald Hoover - Bonneville Power Administration - 1,3,5,6 - WECC

Answer	Yes
Document Name	

Comment

BPA does not believe the standard, as is, is cost effective in addressing the reliability of physical security. The spectrum of sites is too broad. BPA believes there is high potential for sites to be identified on CIP-014-4 list that would have little to no effect on the BES if they were disconnected from the grid. The standard, as is, allows sites with RAS capability to be listed as CIP-014, which mitigates an enormous amount of risk, some might argue all. The number of sites that could potentially be categorized as CIP-14 takes resources away from other sites along critical pathways, and sites that directly link to critical infrastructure. Additionally, day-to-day operations of upstream and downstream sites affect whether singular or multiple pieces of equipment in a site are critical. BPA finds the inclusions of R2.1 and R2.2 are so broad as to compound the issues of cost without a large gain in security or reliability. BPA believes the increase in CIP-014 applicability may require more resources than some smaller Transmission Owners have at their disposal. This increase will not only strain the resources of those smaller Transmission Owners but those of larger size within a BA that may be called upon to assist.

Likes 0	
Dislikes 0	

Response

Tamarra Hardie - Public Utility District No. 1 of Chelan County - 6, Group Name CHPD

Answer	Yes
Document Name	

Comment

Please see comments provided for R2. More technical guidance from NERC on damage distances for a variety of bomb treat types is desired and modifying the distance requirement in R2 to be based upon technically-supported damage distances rather than personnel evacuation mandates is recommended. Additionally in R2, allowing utilities the flexibility to provide rationale in their CIP-014 assessments for why any identified proximate stations within the provided distance should be excluded or if any different distances are used would lead to more realistic physical security scenarios being assessed and reduce the cost-burden of assessing scenarios that are beyond reasonable damage distances.

Likes 0	
Dislikes 0	

Response

Stephen Stafford - Stephen Stafford On Behalf of: Greg Davis, Georgia Transmission Corporation, 1; - Stephen Stafford

Answer	Yes
Document Name	
Comment	

Currently, CIP-014 requires Transmission Owners to conduct planning analyses, and then have these analyses reviewed by a third party verifier. Requirement 6.1 states the the third party verifier must be a registered Planning Coordinator, Transmission Planner, Reliability Coordinator, or have transmission planning or analysis experience. The TO is not the appropriate registered entity to conduct planning analyses. Our understanding is that this is the reason why the standard requires a third party verification by a PC, TP, or RC. Apparently, NERC agrees that the analysis is best suited for the PC, TP or RC function. Furthermore, the fact that the standard is being revised to assure an adequate and consistent approach in evaluating instability as well as the identification of infrastructure critical to the operation of the BPS, supports the premise that the TO-performed study followed by verification by an unaffiliated third party is not a sufficient method. The better method would be to have an affiliated TP or PC to conduct the analysis. It is not cost effective to require the TO to conduct a planning study and then pay an unaffiliated third party to review the study. This is especially true if the TO is also a registered TP or PC. The TP and PC are the best qualified to conduct such studies. Furthermore, since CIP-014 is being revised to be more prescriptive regarding what should be included in the study methodology, the need for third party verification is significantly decreased. GTC recommends that requirement to perform such an analysis be assigned to the TP or PC functions within the TPL group of standards.

Likes 0	
Dislikes 0	
Response	

Nikki Carson-Marquis - Nikki Carson-Marquis On Behalf of: Theresa Allard, Minnkota Power Cooperative Inc., 1; - Nikki Carson-Marquis

Answer	Yes
Document Name	
Comment	

Rather than requiring Transmission Owners without identified applicable Transmission stations/substations to perform a risk assessment every 36 months, it would be much more cost effective to allow utilities without critical (sub)stations to continue to perform the risk assessment every 60 months. The concern that a 60 month assessment may not include all planned facilities before the subsequent risk assessment is performed 60 months later could be allayed by changing the requirement to include facilities planned to be in service within the next 60 months rather than the next 24 months as required in CIP-014-3.

Likes 0	
Dislikes 0	
Response	

Jodi Yeary - AEP - 3

Answer	Yes
Document Name	

Comment
Yes. While this SAR focused on modification to R1, the standard could meet the intent of the original FERC order in a more cost effective manner by modifying subsequent requirements to allow for Transmission system reinforcement that would reduce the impact of damage to a Transmission station on the Interconnection as an alternative solution to physical security protections.

Likes 0	
Dislikes 0	

Response

Misty Carneal - Duke Energy - 1,3,5,6 - Texas RE,SERC,RF	
Answer	Yes
Document Name	

Comment
Duke Energy does not have any additional comments.

Likes 0	
Dislikes 0	

Response

Jamison Cawley - Nebraska Public Power District - 1	
Answer	Yes
Document Name	

Comment
All of the extreme critical fault scenarios are already being evaluated under the TPL-001 standard which has clear definitions of how, where, what and why. This CIP-014 standard requires undocumented and undefined requirements be included in the risk assessment, which does not satisfy the original intent of the Physical Security Standard. If we want to increase physical security at BES substations, a clear bright line criteria should be established based on kV level and number of interconnections like other CIP standards. Inclusion of vague risk assessment criteria wastes valuable resources which could better be spent focusing on the transmission planning system performance and development of a more robust grid which is not susceptible to the loss of any single applicable substation.

Likes 1	Nebraska Public Power District, 5, Bender Ronald
Dislikes 0	

Response

Joseph Scott - Lower Colorado River Authority - 5

Answer	Yes
Document Name	
Comment	

An alternative could be requiring a certain level of security be applied consistently across BES substations (i.e., not limited to CIP-014 substations).

These basic requirements could include: 1) security-grade perimeter fencing 2) remote surveillance via motion-sensing video cameras, and 3) local measures such as motion sensor-activated lighting and break-in audible alarms.

When applied at new substations or as these are improved over time, the incremental cost is not significant and supports a hardened system at a broader level.

Likes 0	
Dislikes 0	
Response	

Gail Elliott - Gail Elliott On Behalf of: Michael Moltane, International Transmission Company Holdings Corporation, 1; - Gail Elliott

Answer	Yes
Document Name	
Comment	

The requirement for documentation is not cost effective. Requiring all entities to provide this documentation for historic stations is an administrative burden. This requirement should only be applicable to those entities who failed to perform a risk assessment for a joint station.

Likes 0	
Dislikes 0	
Response	

Emma Halilovic - Hydro One Networks, Inc. - 1

Answer	Yes
Document Name	2023-06 Draft_3_Comment_Form.docx
Comment	

The alternatives and cost-effective options are outlined in the attached.

Likes 0	
Dislikes 0	
Response	

Daniel Gacek - Exelon - 1, Group Name Exelon	
Answer	Yes
Document Name	
Comment	
As stated in our response to Questions 3 & 5: To reduce the burden on smaller TOs of developing an R3 methodology and performing the R5 planning studies, consider providing an option for entities to use the list of transmission stations or substations obtained from the Attachment 1 analysis, as the input to R7 for primary control center determination, and as the input to R8 to begin the physical attack evaluation. Attachment 1 would therefore be an option as the R3 methodology that would then be applied in R5. R4 would still be required. The R6 third party review would be limited to a review of the Attachment 1 analysis.	
Likes 0	
Dislikes 0	
Response	
James Keele - Entergy - 3	
Answer	Yes
Document Name	
Comment	
Likes 0	
Dislikes 0	
Response	
Darko Kovac, P.E. - Gainesville Regional Utilities - 1,3,5	
Answer	Yes
Document Name	
Comment	
Likes 0	
Dislikes 0	
Response	

Wesley Maurer - Lower Colorado River Authority - 1 - Texas RE	
Answer	Yes
Document Name	
Comment	
Likes 0	
Dislikes 0	
Response	
Carver Powers - Utility Services, Inc. - 4	
Answer	Yes
Document Name	
Comment	
Likes 0	
Dislikes 0	
Response	
Jennie Wike - Jennie Wike On Behalf of: John Merrell, Tacoma Public Utilities (Tacoma, WA), 1, 4, 5, 6, 3; - Jennie Wike, Group Name Tacoma Power	
Answer	Yes
Document Name	
Comment	
Likes 0	
Dislikes 0	
Response	
Lexi Dobrzysnki - Lexi Dobrzysnki On Behalf of: Angela Dockter, Alliant Energy Corporation Services, Inc., 4; - Lexi Dobrzysnki	
Answer	
Document Name	
Comment	

Alliant Energy mirrors the MRO NSRF group Comments.	
Likes 0	
Dislikes 0	
Response	
Donna Wood - Tri-State G and T Association, Inc. - 1	
Answer	
Document Name	
Comment	
NA	
Likes 0	
Dislikes 0	
Response	
Bob Cardle - Bob Cardle On Behalf of: Marco Rios, Pacific Gas and Electric Company, 3, 1, 5; Sandra Ellis, Pacific Gas and Electric Company, 3, 1, 5; Tyler Brun, Pacific Gas and Electric Company, 3, 1, 5; - Bob Cardle	
Answer	
Document Name	
Comment	
PGAE does not comment on cost effectiveness.	
Likes 0	
Dislikes 0	
Response	
Josh Schumacher - Black Hills Corporation - 6, Group Name Black Hills Corporation Segments 1, 3, 5, 6	
Answer	
Document Name	
Comment	
Black Hills Corporation will not comment on cost effectiveness.	

Likes 0	
Dislikes 0	
Response	
Nick Leathers - Nick Leathers On Behalf of: David Jendras Sr, Ameren - Ameren Services, 3, 6, 1; - Nick Leathers	
Answer	
Document Name	
Comment	
Ameren will not comment on the cost effectiveness of the project.	
Likes 0	
Dislikes 0	
Response	
Kristine Martz - Edison Electric Institute - NA - Not Applicable - NA - Not Applicable	
Answer	
Document Name	
Comment	
EEI does not comment on cost.	
Likes 0	
Dislikes 0	
Response	

8. Provide any additional comments for the Drafting Team to consider, if desired.	
Emma Halilovic - Hydro One Networks, Inc. - 1	
Answer	
Document Name	2023-06 Draft_3_Comment_Form.docx
Comment	
System-wide performance evaluation is the accountability of the Reliability Coordinators. Therefore, if the standard must have system-wide (Interconnection) performance testing and judgement of results, the RC must be involved. Not every facility owner will be able to do this. The standard should be practical to implement. See attached for comments.	
Likes 0	
Dislikes 0	
Response	
Kennedy Meier - Electric Reliability Council of Texas, Inc. - 2	
Answer	
Document Name	
Comment	
ERCOT joins the comments submitted by the IRC SRC and adopts them as its own.	
Likes 0	
Dislikes 0	
Response	
Usama Tahir - Seminole Electric Cooperative, Inc. - 3	
Answer	
Document Name	
Comment	
Seminole Electric Cooperative would like clarification on: 1. In Attachment 1 – Applicability Criteria, If a generator has a Collector bus, but the collector bus also serves as a Transmission Facility, how is it classified? Is it classified as a collector bus or Transmission Facility?	

2. How to classify a transmission station/substation that has one line that exits, has a tap half a mile out for example, then goes to two separate Transmission Facilities? How do we count the weight of the transmission station/substation that has one line exiting but it systematically connected to two Transmission Facilities?

3. In requirement R2, are proximate Transmission stations in scope even if they are not BES?

Likes 0	
Dislikes 0	

Response

Melanie Wong - Seminole Electric Cooperative, Inc. - 5

Answer	
Document Name	

Comment

Seminole Electric Cooperative would like clarification on:

1. In Attachment 1 – Applicability Criteria, If a generator has a Collector bus, but the collector bus also serves as a Transmission Facility, how is it classified? Is it classified as a collector bus or Transmission Facility?

2.. How to classify a transmission station/substation that has one line that exits, has a tap half a mile out for example, then goes to two separate Transmission Facilities? How do we count the weight of the transmission station/substation that has one line exiting but it systematically connected to two Transmission Facilities?

3. In requirement R2, are proximate Transmission stations in scope even if they are not BES?

Likes 0	
Dislikes 0	

Response

Monika Montez - California ISO - 2 - WECC, Group Name ISO/RTO Council Standards Review Committee (SRC)

Answer	
Document Name	

Comment

The ISO/RTO Council (IRC) Standards Review Committee (SRC) notes that Criterion 3 in Attachment 1 references Facilities identified by the Planning Coordinator as critical to the derivation of an Interconnection Reliability Operating Limit (IROL). However, under FAC-014-3, Planning Coordinators no longer develop IROLs. The SRC recommends that criterion 3 be updated accordingly to remove the reference to the Planning Coordinator.

The SRC also recommends that the drafting team revise the Technical Rationale to indicate whether the unaffiliated third-party validation under Requirement R6 requires the third party to validate the risk assessments completed in accordance with both Requirements R1 and R2 or just

Requirement R1. The current Technical Rationale only indicates that validation of Requirement R1 risk assessments is required. The Technical Rationale should also be updated to more clearly correct and clarify all references to requirements to align with the newly proposed CIP-014-4 Requirements R1-R5.

Alternatively, a new SAR could be developed to remove Requirement R6 from the proposed CIP-014-4 standard. The new requirements proposed in CIP-014-4 Requirements R1-R5 outline necessary specifics for more meaningful risk assessments, which reduces the need for unaffiliated third-party verification, especially given that auditors are also directed to apply various methods to test the validity of station identifications under current CIP-014-3 Requirement R1.[1]

[1] CMEP Practice Guide CIP-014-2

Likes 0	
Dislikes 0	

Response

Lucinda Bradshaw - Lucinda Bradshaw On Behalf of: Byron Booker, Oncor Electric Delivery, 1; - Lucinda Bradshaw

Answer	
Document Name	

Comment

N/A

Likes 0	
Dislikes 0	

Response

Bret Galbraith - Seminole Electric Cooperative, Inc. - 6

Answer	
Document Name	

Comment

Seminole Electric Cooperative would like clarification on:

1. In Attachment 1 – Applicability Criteria, If a generator has a Collector bus, but the collector bus also serves as a Transmission Facility, how is it classified? Is it classified as a collector bus or Transmission Facility?

2. How to classify a transmission station/substation that has one line that exits, has a tap half a mile out for example, then goes to two separate Transmission Facilities? How do we count the weight of the transmission station/substation that has one line exiting but it systematically connected to two Transmission Facilities?

3. In requirement R2, are proximate Transmission stations in scope even if they are not BES?

Likes 0	
Dislikes 0	
Response	
Hillary Creurer - Allete - Minnesota Power, Inc. - 1	
Answer	
Document Name	
Comment	
Minnesota Power supports MRO-NSRF comments.	
Likes 0	
Dislikes 0	
Response	
Nick Leathers - Nick Leathers On Behalf of: David Jendras Sr, Ameren - Ameren Services, 3, 6, 1; - Nick Leathers	
Answer	
Document Name	
Comment	
We suggest changing the wording of the VSLs so they are not so burdensome.	
Likes 0	
Dislikes 0	
Response	
Ben Hammer - Western Area Power Administration - 1	
Answer	
Document Name	
Comment	
Understanding that R6, formerly R2 under CIP-014-3, is out of scope for this SAR, WAPA recommends a SAR be drafted to remove R6 as an administrative burden that should no longer be needed, given that this project has added the necessary specifics required for a meaningful risk assessment, diminishing the need for third-party verification. Also, there has been anecdotal experience as an industry that auditors have audited the (CIP-014-3) R1 risk assessments directly without relying on the R2 third-party verification as directed by the RSAW. If (CIP-014-4) R6 is to be retained,	

90 calendar days for completing R6 in R6.2 is proving to be tight for some larger entities, which request extension to 180 calendar days (which would be much easier to calculate as six calendar months to avoid getting tripped up on 28/30/31-day months).	
Likes 0	
Dislikes 0	
Response	
Rebika Yitna - Rebika Yitna On Behalf of: Roger Brand, MEAG Power, 3, 1; - Rebika Yitna	
Answer	
Document Name	
Comment	
No additional comments	
Likes 0	
Dislikes 0	
Response	
Michelle Pagano - Con Ed - Consolidated Edison Co. of New York - 5	
Answer	
Document Name	
Comment	
This standard does not use the glossary term "Facility" other than in Attachment 1 and the exemption portion of 4.1.2 in the Applicability section; this creates ambiguity on whether the proximate stations identified in R2 are required to meet BES criteria or not. Strategic use of that term may alleviate some of the confusion around that requirement expressed during the webinar.	
Likes 0	
Dislikes 0	
Response	
Zahid Qayyum - New York Power Authority - 5	
Answer	
Document Name	
Comment	

- NYPA still believes that Requirement R2 remains vague and open to varied interpretations. For example, under R2 when evaluating the proximate transmission substations, the language in R2 is unclear whether any BES transmission station regardless of its voltage level should be assessed if it falls within 1,500 feet of a station identified in R1. We recommend SDT should give guidance in the standard itself if possible. The proximity of 1500ft tends to have more impact in urban cities therefore we recommend the SDT to consider this situation as well.
- Also regarding R3.1, it would be helpful if the SDT could provide guidance on the 'minimum' threshold for identifying unacceptable generation or load loss to support more consistent interpretation and understanding.
- Many interconnections projects, at least in the NPCC region, put a placeholder of in-service date of within 3 years, but these dates are often extended based on project specific timelines. Requiring a 36 month risk assessment (R1) would force TOs to study those projects which may not materialize within the said timeline or likely to have their ISDs extended, placing an unnecessary burden on TO's planning and study resources.

Likes 0	
Dislikes 0	

Response

Jamison Cawley - Nebraska Public Power District - 1

Answer	
Document Name	

Comment

- Under R2 clarify if "proximate" substation voltages must be 200kV and above or if the scope included all BES voltages.
- Technical Rationale for R3 part 3.4 states: *"the term "inoperable" includes the total loss of communication and protection equipment at the substation, necessitating delayed clearance from far-end relaying to isolate the event's impacts."* Clarify if this total loss of equipment is for only the applicable substation or also includes the proximate substation equipment.
- The Technical Rationale should clarify that fault type and fault location in a substation will be defined in the TO methodology.
- Per the 7/8/25 WebEx Q&A "the standard is silent" on what voltages to simulate faults on in a single substation with multiple voltages (ex 345kV with 230kV or 115kV). The Technical Rationale should clarify that this can be defined in the TO methodology.
- The Technical Rationale should clarify if the intent of the standard is for simultaneous faults to be simulated at applicable and proximate substations per the statements made on the 7/8/25 WebEx Q&A.

Likes 1	Nebraska Public Power District, 5, Bender Ronald
Dislikes 0	

Response

Lincoln Burton - Con Ed - Consolidated Edison Co. of New York - 3

Answer	
Document Name	

Comment

This standard does not use the glossary term "Facility" other than in Attachment 1 and the exemption portion of 4.1.2 in the Applicability section; this creates ambiguity on whether the proximate stations identified in R2 are required to meet BES criteria or not. Strategic use of that term may alleviate some of the confusion around that requirement expressed during the webinar.

Likes 0	
Dislikes 0	
Response	
Alan Kloster - Alan Kloster On Behalf of: Jeremy Harris, Evergy, 3, 5, 1, 6; Kevin Frick, Evergy, 3, 5, 1, 6; Marcus Moor, Evergy, 3, 5, 1, 6; Tiffany Lake, Evergy, 3, 5, 1, 6; - Alan Kloster	
Answer	
Document Name	
Comment	
Evergy supports and incorporates by reference the comments of the MRO NSRF for question #8.	
Likes 0	
Dislikes 0	
Response	
Rachel Coyne - Texas Reliability Entity, Inc. - 10	
Answer	
Document Name	
Comment	
Texas RE noticed the clean and redlines versions of CIP-014-4 do not match. The clean shows the subparts of Parts 3.3 and 3.4 as bullets, whereas the redline version shows them as numbers.	
Likes 0	
Dislikes 0	
Response	
Jason Chandler - Con Ed - Consolidated Edison Co. of New York - 6	
Answer	
Document Name	
Comment	
This standard does not use the glossary term "Facility" other than in Attachment 1 and the exemption portion of 4.1.2 in the Applicability section; this creates ambiguity on whether the proximate stations identified in R2 are required to meet BES criteria or not. Strategic use of that term may alleviate some of the confusion around that requirement expressed during the webinar.	

Likes 0	
Dislikes 0	

Response

Dermot Smyth - Con Ed - Consolidated Edison Co. of New York - 1, Group Name Con Edison

Answer	
Document Name	

Comment

This standard does not use the glossary term "Facility" other than in Attachment 1 and the exemption portion of 4.1.2 in the Applicability section; this creates ambiguity on whether the proximate stations identified in R2 are required to meet BES criteria or not. Strategic use of that term may alleviate some of the confusion around that requirement expressed during the webinar.

Likes 0	
Dislikes 0	

Response

Matt Carden - Southern Company - Southern Company Services, Inc. - 1

Answer	
Document Name	

Comment

Under “Purpose” we prefer the previous language of “as a result of”.

Southern Company recommends swapping Requirement R3 and R4 chronologically. This follows a more logical approach of identifying the stations and responsibilities to perform the assessment in the first three requirements followed by an assessment methodology in R4 and the performance of an assessment in R5.

Southern Company recommends removing Requirement R6. With the understanding that this is not explicitly in scope of the current SAR, the added specificity of the proposed standard eliminates the reliability benefit of the third-party verifier. Additionally, based on a previous audit of CIP-014-3, Southern Company did not observe the Regional Entity take into consideration the review by the R2 third party verifier. If this is consistent across other Regional Entities, then an elimination of CIP-014-4 R6 may be appropriate due to the extra cost and the lack of a reliability benefit.

Likes 0	
Dislikes 0	

Response

Misty Carneal - Duke Energy - 1,3,5,6 - Texas RE,SERC,RF

Answer	

Document Name	
Comment	
Duke Energy does not have any additional comments. Thank you for considering our comments.	
Likes 0	
Dislikes 0	
Response	
Jodi Yeary - AEP - 3	
Answer	
Document Name	
Comment	
AEP is supportive of the VSLs, except for R2. Currently, R2 only specifies a Severe VSL with specific reference to “fence line” in the VSL table. This increases the likelihood of severe violations being identified based on disagreements on the method of distance calculation, which is not a high risk reliability objective. Lower severity VSLs should be identified for R2. Thank you for being so responsive to comments from the previous version to this version!	
Likes 0	
Dislikes 0	
Response	
Isidoro Behar - Long Island Power Authority - 1	
Answer	
Document Name	
Comment	
Similar to TPL-001-5.1 Requirement 2.6, we recommend that the SDT consider, and if applicable, outline under which specific circumstances past studies/results can be utilized for the CIP-014-4 risk assessment. The possible use of past studies may reduce workload of entities and support a more cost effective option to address CIP-014-4 needs.	
Likes 0	
Dislikes 0	
Response	

Nikki Carson-Marquis - Nikki Carson-Marquis On Behalf of: Theresa Allard, Minnkota Power Cooperative Inc., 1; - Nikki Carson-Marquis	
Answer	
Document Name	
Comment	
MPC appreciates the SDT's efforts and the opportunity to comment.	
Likes 0	
Dislikes 0	
Response	
Mark Garza - FirstEnergy - FirstEnergy Corporation - 4, Group Name FE Voter	
Answer	
Document Name	
Comment	
No additional comments.	
Likes 0	
Dislikes 0	
Response	
Randy Peters - Manitoba Hydro - 1,3,5,6 - MRO	
Answer	
Document Name	
Comment	
Manitoba Hydro agrees with the modifications made for R5, especially the addition of the new sub-requirement R5.2. However, it will be hard for a third-party reviewer to verify a current assessment unless the results of the previous assessment are provided with the current assessment Manitoba Hydro recommends that requirement R6 be removed from the standard as it is overly administrative. The revisions made from this project specifically outline study requirements and an additional third party review of the study is no longer necessary. In addition, if there were minimal changes to the network from the previous third-party assessment, a new third party assessment provides very little value. The NERC Quality Review (QR) team may be able to assist with this change to make the standard more efficient and cost effective.	
Likes 0	
Dislikes 0	
Response	

Andrew Smith - APS - Arizona Public Service Co. - 5	
Answer	
Document Name	
Comment	
AZPS appreciates the clarifications included by the Drafting Team in this draft, however continues to seek additional clarifications regarding entity responsibilities or exclusion of responsibilities for non-owned/operated stations/substations within proximity of identified locations. AZPS seeks clarification on if a site is included as part of Requirement R2 and identified during the risk assessment per R5 but is owned by a different company how that applies to R8-R10.	
Likes 0	
Dislikes 0	
Response	
Greg Sorenson - Greg Sorenson On Behalf of: Tremayne Brown, ReliabilityFirst , 10; - Greg Sorenson	
Answer	
Document Name	
Comment	
Consider the addition of definitive or explicit trigger for Requirement R8 if the identification of the critical asset remains unchanged. Without this it creates a significant blind spot because the threat environment can evolve and shift dramatically over the 36-month cycle or even since the initial assessment or implementation of the required physical security controls. Without a built-in mechanism to re-evaluate threats entities may overlook new or emerging vulnerabilities, leaving critical assets exposed.	
Likes 0	
Dislikes 0	
Response	
Donna Wood - Tri-State G and T Association, Inc. - 1	
Answer	
Document Name	
Comment	
NA	
Likes 0	
Dislikes 0	

Response

Thomas Breen - Berkshire Hathaway Energy - MidAmerican Energy Co. - 1	
Answer	
Document Name	
Comment	
Support the comments of the MRO NSRF.	
Likes 0	
Dislikes 0	

Response

Lexi Dobrzysnki - Lexi Dobrzysnki On Behalf of: Angela Dockter, Alliant Energy Corporation Services, Inc., 4; - Lexi Dobrzysnki	
Answer	
Document Name	
Comment	
Alliant Energy mirrors the MRO NSRF group Comments.	
Likes 0	
Dislikes 0	

Response

Stephen Stafford - Stephen Stafford On Behalf of: Greg Davis, Georgia Transmission Corporation, 1; - Stephen Stafford	
Answer	
Document Name	
Comment	

The primary issue with this standard as it is written, and as this draft continues is the application of requirements/expectations appropriate for the Transmission Planner/Planning Coordinator function to the Transmission Owner instead. This reduces clarity on the types of studies to be performed to assess the extreme events identified in this standard.

Regarding R6:

With an attempt at clarifying study criteria, though they should be applied to the appropriate planning entity, there is no reason to maintain a requirement for an unaffiliated third party to perform a verification of a transmission planning analysis associated with the risk assessment. Instead of requiring planning entities be the third party verifier, they should just perform the study under clearly defined requirements in a TPL standard and communicate

this information to the Transmission Owner. It is also important to note the third party verifying the risk assessment for this physical security standard is not required to have expertise in that area according to this requirement. Additionally, the SDT should consider removing the Reliability Coordinator as a potential third party verifier as that function does not perform the type of analysis being sought in this standard.

Additional Comment:

The analysis outlined in the CIP-014 standard is an evaluation of an extreme event and is based on transmission planning analysis. Currently, the existing TPL-001 standard requires the evaluation of extreme events, though, it is not specific to this particular substation outage analysis and corrective actions are not required for these events. Additionally, there are ongoing efforts to establish a separate standard to address the long-term planning analysis around extreme weather events. It would seem NERC and the industry are potentially missing an opportunity to consolidate requirements around the evaluation of extreme events better than what is currently provided for in the current construct of the existing and planned Reliability Standards. Consideration should be given by NERC to provide a better pathway to house long-term planning requirements around extreme event analysis within the TPL standards (not CIP) and specify the reliability analyses needed, the parameters for determining reliability, expectations for corrective actions, and the communication path from planning to owners and others with a reliability-related need for this information. The planning assessment/CAP required by TPL-001 is already required to be distributed to applicable owners. Clarifying the extreme event expectations in TPL-001 to specify the substation outage alluded to in CIP-014 is one pathway to better align standard requirements with the appropriate entity.

Likes 0	
Dislikes 0	

Response

Amy Key - Berkshire Hathaway Energy - MidAmerican Energy Co. - 3

Answer	
Document Name	

Comment

MEC supports the comments of the MRO NSRF

Likes 0	
Dislikes 0	

Response

Anna Martinson - MRO - 1,2,3,4,5,6 - MRO, Group Name MRO Group

Answer	
Document Name	

Comment

Understanding that R6, formerly R2 under CIP-014-3, is out of scope for this SAR, MRO NSRF recommends a SAR be drafted to remove R6 as an administrative burden that should no longer be needed, given that this project has added the necessary specifics required for a meaningful risk assessment, diminishing the need for third-party verification. Also, there has been anecdotal experience as an industry that auditors have audited the (CIP-014-3) R1 risk assessments directly without relying on the R2 third-party verification as directed by the RSAW. If (CIP-014-4) R6 is to be retained,

90 calendar days for completing R6 in R6.2 is proving to be tight for some larger entities, which request extension to 180 calendar days (which would be much easier to calculate as six calendar months to avoid getting tripped up on 28/30/31-day months).	
Likes 0	
Dislikes 0	
Response	
Ronald Hoover - Bonneville Power Administration - 1,3,5,6 - WECC	
Answer	
Document Name	
Comment	
BPA appreciates the opportunity to comment. BPA recognizes CIP-014 and physical security are growing beyond the intent of the original standard. BPA recommends evaluating the need to add additional NERC registrations to the standard applicability to broaden the available information required within CIP-014-4. BPA has noticed a possible grammar error with the redline of the technical rationale. Under the Rationale for Requirement R3, Part 3.1, located in the second line of the second paragraph Transmission substation is repeated twice. BPA believes this was supposed to follow the NERC glossary of terms and read “Transmission stations or sub-stations.	
Likes 0	
Dislikes 0	
Response	
Sean Steffensen - IDACORP - Idaho Power Company - 1	
Answer	
Document Name	
Comment	
In reference to the proposed changes to CIP-014 Section 4.1.1, IPC recommends explicitly requiring an agreement between joint owners of Transmission stations or substations to designate which entity is responsible for conducting the risk assessment and physical security studies to ensure clarity and accountability.	
Likes 0	
Dislikes 0	
Response	
Alison Nickells - NiSource - Northern Indiana Public Service Co. - 1	
Answer	
Document Name	

Comment	
no comments.	
Likes 0	
Dislikes 0	
Response	

NERC
NORTH AMERICAN ELECTRIC RELIABILITY CORPORATION

Consideration of Comments

Project Name:	2023-06 CIP-014 Risk Assessment Refinement | Draft 3
Comment Period Start Date:	6/6/2025
Comment Period End Date:	7/21/2025
Associated Ballot(s):	Project 2023-06 CIP-014 Risk Assessment Refinement CIP-014-4 AB 3 ST Project 2023-06 CIP-014 Risk Assessment Refinement Implementation Plan AB 3 OT

There were 74 sets of responses, including comments from approximately 160 different people from approximately 98 companies representing 8 of the Industry Segments as shown in the table on the following pages.

All comments submitted can be reviewed in their original format on the project page.

If you feel that your comment has been overlooked, let us know immediately. Our goal is to give every comment serious consideration in this process. If you feel there has been an error or omission, contact Director, Standards Development, Jamie Calderon (via email) or at (404) 446-9647.

Questions

1. Do you agree with the modifications made in CIP-014-4 with modified Requirement R1 to address the issues identified in the SAR? If you do not agree, please provide your recommendation and, if appropriate, technical or procedural justification.

2. Do you agree with the modifications made in CIP-014-4 with new Requirement R2 to address the issues identified in the SAR? If you do not agree, please provide your recommendation and, if appropriate, technical or procedural justification.

3. Do you agree with the modifications made in CIP-014-4 with new Requirement R3 to address the issues identified in the SAR? If you do not agree, please provide your recommendation and, if appropriate, technical or procedural justification.

4. Do you agree with the modifications made in CIP-014-4 with new Requirement R4 to address the issues identified in the SAR? If you do not agree, please provide your recommendation and, if appropriate, technical or procedural justification.

5. Do you agree with the modifications made in CIP-014-4 with adding Requirement R5 to address the issues identified in the SAR? If you do not agree, please provide your recommendation and, if appropriate, technical or procedural justification.

6. Do you agree with the Implementation Plan for CIP-014-4? If you think an alternate timeframe is needed, please propose an alternate implementation plan with a detailed explanation.

7. Do you believe there are alternatives or more cost-effective options to address the recommendations in CIP-014-4 to address the reliability issue of physical security? If so, please provide your recommendation and, if appropriate, technical, or procedural justification.

8. Provide any additional comments for the Drafting Team to consider, if desired.

The Industry Segments are:

1 — Transmission Owners
2 — RTOs, ISOs
3 — Load-serving Entities
4 — Transmission-dependent Utilities
5 — Electric Generators
6 — Electricity Brokers, Aggregators, and Marketers
7 — Large Electricity End Users
8 — Small Electricity End Users
9 — Federal, State, Provincial Regulatory or other Government Entities
10 — Regional Reliability Organizations, Regional Entities

Organization Name	Name	Segment(s)	Region	Group Name	Group Member Name	Group Member Organization	Group Member Segment(s)	Group Member Region
MRO	Anna Martinson	1,2,3,4,5,6	MRO	MRO Group	Shonda McCain	Omaha Public Power District (OPPD)	1,3,5,6	MRO
					Michael Brytowski	Great River Energy	1,3,5,6	MRO
					Jamison Cawley	Nebraska Public Power District	1,3,5	MRO
					Jay Sethi	Manitoba Hydro (MH)	1,3,5,6	MRO
					Husam Al-Hadidi	Manitoba Hydro (System Preformance)	1,3,5,6	MRO
					George Brown	Pattern Operators LP	5	MRO
					Amy Key	MidAmerican Energy Company (MEC)	1	MRO
					Seth Shoemaker	Muscatine Power & Water	1,3,5,6	MRO
					Michael Ayotte	ITC Holdings	1	MRO
					Peter Brown	Invenergy	5,6	MRO

					Angela Wheat	Southwestern Power Administration	1	MRO
					Joshua Phillips	Southwest Power Pool	2	MRO
					Patrick Tuttle	Oklahoma Municipal Power Authority	4,5	MRO
					Hayden Maples	Evergy	1,3,5,6	MRO
					Kirsten Rowley	MISO	2	MRO
					Andrew Coffelt	Kansas City Board of Public Utilities	1,3,5,6	MRO
Tennessee Valley Authority	Brian Millard	1,3,5,6	SERC	TVA RBB	Ian Grant	Tennessee Valley Authority	3	SERC
					David Plumb	Tennessee Valley Authority	1	SERC
					Darren Boehm	Tennessee Valley Authority	5	SERC
					Jeffrey Powell	Tennessee Valley Authority	6	SERC
Santee Cooper	Chris Wagner	1		Santee Cooper	Weijian Cong	Santee Cooper	1,3,5,6	SERC

					John Abrams	Santee Cooper	1,3,5,6	SERC
Exelon	Daniel Gacek	1		Exelon	Daniel Gacek	Exelon	1	RF
					Kinte Whitehead	Exelon	3	RF
Con Ed - Consolidated Edison Co. of New York	Dermot Smyth	1	NPCC	Con Edison	Dermot Smyth	Con Edison Company of New York	1,3,5,6	NPCC
					Edward Bedder	Orange & Rockland		NPCC
Jennie Wike	Jennie Wike		WECC	Tacoma Power	Jennie Wike	Tacoma Public Utilities	1,3,4,5,6	WECC
					John Merrell	Tacoma Public Utilities (Tacoma, WA)	1	WECC
					John Nierenberg	Tacoma Public Utilities (Tacoma, WA)	3	WECC
					Hien Ho	Tacoma Public Utilities (Tacoma, WA)	4	WECC
					Terry Gifford	Tacoma Public Utilities (Tacoma, WA)	6	WECC
					Ozan Ferrin	Tacoma Public Utilities (Tacoma, WA)	5	WECC

Black Hills Corporation	Josh Schumacher	6		Black Hills Corporation Segments 1, 3, 5, 6	Trevor Rombough	Black Hills Corporation	1	WECC
					Josh Combs	Black Hills Corporation	3	WECC
					Sheila Suurmeier	Black Hills Corporation	5	WECC
					Josh Schumacher	Black Hills Corporation	6	WECC
FirstEnergy - FirstEnergy Corporation	Mark Garza	4		FE Voter	Julie Severino	FirstEnergy - FirstEnergy Corporation	1	RF
					Aaron Ghodooshim	FirstEnergy - FirstEnergy Corporation	3	RF
					Robert Loy	FirstEnergy - FirstEnergy Solutions	5	RF
					Mark Garza	FirstEnergy-FirstEnergy	1,3,4,5,6	RF
					Stacey Sheehan	FirstEnergy - FirstEnergy Corporation	6	RF

California ISO	Monika Montez	2	WECC	ISO/RTO Council Standards Review Committee (SRC)	Monika Montez	CAISO	2	WECC
					John Pearson	ISO New England, Inc.	2	NPCC
					Gregory Campoli	New York Independent System Operator	2	NPCC
					Kennedy Meier	Electric Reliability Council of Texas, Inc.	2	Texas RE
					Elizabeth Davis	PJM	2	SERC
Northeast Power Coordinating Council	Ruida Shu	10	NPCC	NPCC RSC	Gerry Dunbar	Northeast Power Coordinating Council	10	NPCC
					Deidre Altobell	Con Edison	1	NPCC
					Michele Tondalo	United Illuminating Co.	1	NPCC
					Stephanie Ullah-Mazzuca	Orange and Rockland	1	NPCC

					Michael Ridolfino	Central Hudson Gas & Electric Corp.	1	NPCC
					Randy Buswell	Vermont Electric Power Company	1	NPCC
					James Grant	NYISO	2	NPCC
					Dermot Smyth	Con Ed - Consolidated Edison Co. of New York	1	NPCC
					David Burke	Orange and Rockland	3	NPCC
					Salvatore Spagnolo	New York Power Authority	1	NPCC
					Sean Bodkin	Dominion - Dominion Resources, Inc.	6	NPCC
					Silvia Mitchell	NextEra Energy - Florida Power and Light Co.	1	NPCC
					Sean Cavote	PSEG	4	NPCC
					Jason Chandler	Con Edison	5	NPCC
					Shivaz Chopra	New York Power Authority	6	NPCC

					Vijay Puran	New York State Department of Public Service	6	NPCC
					David Kiguel	Independent	7	NPCC
					Joel Charlebois	AESI	7	NPCC
					Joshua London	Eversource Energy	1	NPCC
					Joel Charlebois	AESI	7	NPCC
					John Hastings	National Grid	1	NPCC
					Erin Wilson	NB Power	1	NPCC
					James Grant	NYISO	2	NPCC
					Michael Couchesne	ISO-NE	2	NPCC
					Kurtis Chong	IESO	2	NPCC
					Michele Pagano	Con Edison	4	NPCC
					Bendong Sun	Bruce Power	4	NPCC
					Carvers Powers	Utility Services	5	NPCC
					Wes Yeomans	NYSRC	7	NPCC
					Emma Halilovic	Hydro One	1,3	NPCC
					Philip Nichols	National Grid	1	NPCC
					Emma Halilovic	Hydro One	1,3	NPCC
					Caver Powers	Utility Services	5	NPCC

Public Utility District No. 1 of Chelan County	Tamarra Hardie	6		CHPD	Joyce Gundry	Public Utility District No. 1 of Chelan County	3	WECC
					Rebecca Zahler	Public Utility District No. 1 of Chelan County	5	WECC
					Diane Landry	Public Utility District No. 1 of Chelan County	1	WECC
Tim Kelley	Tim Kelley		WECC	SMUD and BANC	Nicole Looney	Sacramento Municipal Utility District	3	WECC
					Charles Norton	Sacramento Municipal Utility District	6	WECC
					Wei Shao	Sacramento Municipal Utility District	1	WECC
					Foung Mua	Sacramento Municipal Utility District	4	WECC
					Nicole Goi	Sacramento Municipal Utility District	5	WECC

					Kevin Smith	Balancing Authority of Northern California	1	WECC

1. Do you agree with the modifications made in CIP-014-4 with modified Requirement R1 to address the issues identified in the SAR? If you do not agree, please provide your recommendation and, if appropriate, technical or procedural justification.	
Nikki Carson-Marquis - Nikki Carson-Marquis On Behalf of: Theresa Allard, Minnkota Power Cooperative Inc., 1; - Nikki Carson-Marquis	
Answer	No
Document Name	
Comment	
MPC continues to strongly disagree with the use of a 36-month timeframe for utilities who have not previously identified stations or substations as applicable. Increasing the study frequency from every 60 months to every 36 months increases the study burden and cost for utilities without applicable Transmission station(s) or substation(s) while providing no documented benefit to reliability of the BES. MPC proposes to retain the every 60 month requirement for entities that have not identified applicable assets, and include Transmission station(s) and Transmission substation(s) planned to be in service within 60 calendar months. Please see MPC's response to Question 5 for more discussion.	
Likes 0	
Dislikes 0	
Response	
Thank you for your comments. A directive of the SAR was to "correct any discrepancies between the study period, frequency of study, and the base case{s} a Transmission Owner uses." The Drafting Team chose a timeframe that balanced the directive of the SAR and the comments from industry to make the timeframe either shorter or longer than 36 months.	
Isidoro Behar - Long Island Power Authority - 1	
Answer	No
Document Name	
Comment	
Question for the SDT: Considering the Measure 1 verbiage ("evidence may include, but are not limited to, dated written or electronic documentation of the Transmission station(s) and Transmission substation(s) (existing and those planned to be in service within 36	

calendar months) that meet any of the criteria in Attachment 1."), what action is needed to demonstrate compliance with respect to "identifying" applicable stations, and what notification(s) is needed? Our observation is that the Req #1 verbiage and the Measure 1 verbiage do not align. Additionally, we observe that the term "applicable" station is introduced in Req# 1 and is used throughout the standard. The term "proximate" station is introduced in Req #2 and is referred to in Reqs 3.3 and 5. Based on this revision to the standard, these are two distinct sets of stations (applicable and proximate). We observe that for a few requirements / sub-requirements, there may be a possible gap or point of confusion as to whether a proximate station needs to meet the requirement / sub-requirement. As a general comment, we recommend that the specific use of both of these terms be reviewed in fine detail to ensure no that there will no confusion as to whether a requirement pertains to an applicable station, a proximate station, or to both.

Likes 0	
Dislikes 0	

Response
Thank you for your comment. The drafting team looked the measure over and believes that the verbiage is clear. From the SAR work scopes, neighboring BES stations must be considerate. Requirement R3, Parts R3.3.2 and R3.4, as well as Requirement R5 spelled out what exactly applicable entities should do for proximate stations. The drafting team made some modifications in Requirement R2 to clear some confusion.

Steven Belle - Dominion - Dominion Virginia Power - 1	
Answer	No
Document Name	

Comment
Dominon beleives that 36 months identification requirement for planned substations is unrealistic and difficult to predict based on constructon delays, supply chain, outage planning and RTO planning requirements.

Likes 0	

Dislikes 0	
Response	
Thank you for your comments. A directive of the SAR was to “correct any discrepancies between the study period, frequency of study, and the base case{s} a Transmission Owner uses.” The Drafting Team chose a timeframe that balanced the directive of the SAR and the comments from industry to make the timeframe either shorter or longer than 36 months.	
Jamison Cawley - Nebraska Public Power District - 1	
Answer	No
Document Name	
Comment	
We do not support the change from 60 months (with no previous applicable substation) to 36 months as there appears to be no technical basis that supports this change. This timeframe causes the Transmission Owner (TO) to enter an unknown state of compliance with CIP-014 if they are on Years 4-5 from the previous 60-month Requirement. The current state of the risk assessment requirements is subjective and TO’s should not be forced to perform subjective study efforts on a more frequent basis which only pulls important resources in directions that provide no value to the industry. Further, most significant EHV expansion projects which would actually change the previous base case assumptions do not occur every 36 months and are more in line with 60-month construction periods.	
Likes 1	Nebraska Public Power District, 5, Bender Ronald
Dislikes 0	
Response	
Thank you for your comments. A directive of the SAR was to “correct any discrepancies between the study period, frequency of study, and the base case{s} a Transmission Owner uses.” The Drafting Team chose a timeframe that balanced the directive of the SAR and the comments from industry to make the timeframe either shorter or longer than 36 months.	
Melanie Wong - Seminole Electric Cooperative, Inc. - 5	
Answer	No
Document Name	
Comment	

Likes 0	
Dislikes 0	
Response	
Thank you for your feedback.	
Amy Wilke - American Transmission Company, LLC - 1	
Answer	Yes
Document Name	
Comment	
ATC agrees with MRO NSRF comments.	
Likes 0	
Dislikes 0	
Response	
Thank you for your support.	
Andrew Smith - APS - Arizona Public Service Co. - 5	
Answer	Yes
Document Name	
Comment	
AZPS agrees with the modifications made in R1	
Likes 0	
Dislikes 0	
Response	
Thank you for your support.	

Randy Peters - Manitoba Hydro - 1,3,5,6 - MRO	
Answer	Yes
Document Name	
Comment	
Manitoba Hydro agrees with the change that all entities should identify applicable substations every 36 months.	
Likes 0	
Dislikes 0	
Response	
Thank you for your support.	
Mark Garza - FirstEnergy - FirstEnergy Corporation - 4, Group Name FE Voter	
Answer	Yes
Document Name	
Comment	
FirstEnergy agrees with the modifications made to Requirement R1.	
Likes 0	
Dislikes 0	
Response	
Thank you for your support.	
Bob Cardle - Bob Cardle On Behalf of: Marco Rios, Pacific Gas and Electric Company, 3, 1, 5; Sandra Ellis, Pacific Gas and Electric Company, 3, 1, 5; Tyler Brun, Pacific Gas and Electric Company, 3, 1, 5; - Bob Cardle	
Answer	Yes
Document Name	
Comment	

A three-year calendar cycle is easier to follow.	
Likes 0	
Dislikes 0	
Response	
Thank you for your support.	
Josh Schumacher - Black Hills Corporation - 6, Group Name Black Hills Corporation Segments 1, 3, 5, 6	
Answer	Yes
Document Name	
Comment	
Black Hills Corporation agrees with the modifications made in CIP-014-4 Requirement R1.	
Likes 0	
Dislikes 0	
Response	
Thank you for your support.	
Misty Carneal - Duke Energy - 1,3,5,6 - Texas RE,SERC,RF	
Answer	Yes
Document Name	
Comment	
Duke Energy supports the modifications to R1.	
Likes 0	
Dislikes 0	

Response	
Thank you for your support.	
Matt Carden - Southern Company - Southern Company Services, Inc. - 1	
Answer	Yes
Document Name	
Comment	
Southern Company agrees with the modifications made in CIP-014-4 Requirement R1.	
Likes 0	
Dislikes 0	
Response	
Thank you for your support.	
Timothy Singh - Timothy Singh On Behalf of: Israel Perez, Salt River Project, 3, 6, 5, 1; Laura Somak, Salt River Project, 3, 6, 5, 1; Mathew Weber, Salt River Project, 3, 6, 5, 1; Matthew Jaramilla, Salt River Project, 3, 6, 5, 1; - Timothy Singh	
Answer	Yes
Document Name	
Comment	
SRP agrees with the consolidation of timelines into a single 36-month cycle in Requirment R1.	
Likes 0	
Dislikes 0	
Response	
Thank you for your support.	
Nick Leathers - Nick Leathers On Behalf of: David Jendras Sr, Ameren - Ameren Services, 3, 6, 1; - Nick Leathers	
Answer	Yes

Document Name	
Comment	
Ameren agrees with EEI's comments.	
Likes 0	
Dislikes 0	
Response	
Thank you for your support. Please see the response to EEI’s comments.	
Selene Willis - Edison International - Southern California Edison Company - 5	
Answer	Yes
Document Name	
Comment	
"Please see EEI Comments"	
Likes 0	
Dislikes 0	
Response	
Thank you for your support. Please see the response to EEI’s comments.	
Richard Vendetti - NextEra Energy - 5	
Answer	Yes
Document Name	
Comment	
Nextera agrees with modifications made in CIP-04-4, R1	

Likes 0	
Dislikes 0	
Response	
Thank you for your support.	
Kristine Martz - Edison Electric Institute - NA - Not Applicable - NA - Not Applicable	
Answer	Yes
Document Name	
Comment	
EEI agrees with the modifications made in CIP-014-4 Requirement R1.	
Likes 0	
Dislikes 0	
Response	
Thank you for your support.	
Dan Perry - TXNM Energy - 1,3,5 - WECC,Texas RE	
Answer	Yes
Document Name	
Comment	
TXNM Energy agrees with modifications made in CIP-014-4 Requirement R1	
Likes 0	
Dislikes 0	
Response	
Thank you for your support.	

Lucinda Bradshaw - Lucinda Bradshaw On Behalf of: Byron Booker, Oncor Electric Delivery, 1; - Lucinda Bradshaw	
Answer	Yes
Document Name	
Comment	
N/A	
Likes 0	
Dislikes 0	
Response	
Thank you for your support.	
Kelley Sargent - Puget Sound Energy, Inc. - 3	
Answer	Yes
Document Name	
Comment	
Agree with modification to reduce risk assessment frequency to every 36 months (from current every 30 months) and increase study window for planned substations to 36 months (from current 24 months).	
Likes 0	
Dislikes 0	
Response	
Thank you for your support.	
Robert Blackney - Edison International - Southern California Edison Company - 1	
Answer	Yes
Document Name	
Comment	

See comments submitted by Edison Electric Institute.	
Likes 0	
Dislikes 0	
Response	
Thank you for your support. Please see the response to EEI's comments.	
Monika Montez - California ISO - 2 - WECC, Group Name ISO/RTO Council Standards Review Committee (SRC)	
Answer	Yes
Document Name	
Comment	
The ISO/RTO Council (IRC) Standards Review Committee (SRC) agrees that the SAR achieves consistency.	
Likes 0	
Dislikes 0	
Response	
Thank you for your support.	
Kennedy Meier - Electric Reliability Council of Texas, Inc. - 2	
Answer	Yes
Document Name	
Comment	
ERCOT joins the comments submitted by the ISO/RTO Council (IRC) Standards Review Committee (SRC) and adopts them as its own.	
Likes 0	
Dislikes 0	

Response	
Thank you for your support.	
Nazra Gladu - Manitoba Hydro - 1	
Answer	Yes
Document Name	
Comment	
Likes 0	
Dislikes 0	
Response	
Thank you for your support.	
Alison Nickells - NiSource - Northern Indiana Public Service Co. - 1	
Answer	Yes
Document Name	
Comment	
Likes 0	
Dislikes 0	
Response	
Thank you for your support.	
Sean Steffensen - IDACORP - Idaho Power Company - 1	
Answer	Yes
Document Name	
Comment	

Likes 0	
Dislikes 0	
Response	
Thank you for your support.	
Kevin Conway - Western Power Pool - 4	
Answer	Yes
Document Name	
Comment	
Likes 0	
Dislikes 0	
Response	
Thank you for your support.	
Jeffrey Streifling - NB Power Corporation - 1	
Answer	Yes
Document Name	
Comment	
Likes 0	
Dislikes 0	
Response	
Thank you for your support.	
Tamarra Hardie - Public Utility District No. 1 of Chelan County - 6, Group Name CHPD	

Answer	Yes
Document Name	
Comment	
Likes 0	
Dislikes 0	
Response	
Thank you for your support.	
Anna Martinson - MRO - 1,2,3,4,5,6 - MRO, Group Name MRO Group	
Answer	Yes
Document Name	
Comment	
Likes 0	
Dislikes 0	
Response	
Thank you for your support.	
Amy Key - Berkshire Hathaway Energy - MidAmerican Energy Co. - 3	
Answer	Yes
Document Name	
Comment	
Likes 0	
Dislikes 0	

Response	
Thank you for your support.	
Stephen Stafford - Stephen Stafford On Behalf of: Greg Davis, Georgia Transmission Corporation, 1; - Stephen Stafford	
Answer	Yes
Document Name	
Comment	
Likes 0	
Dislikes 0	
Response	
Thank you for your support.	
James Keele - Entergy - 3	
Answer	Yes
Document Name	
Comment	
Likes 0	
Dislikes 0	
Response	
Thank you for your support.	
Jessica Cordero - Unisource - Tucson Electric Power Co. - 1	
Answer	Yes
Document Name	
Comment	

Likes 0	
Dislikes 0	
Response	
Thank you for your support.	
Thomas Breen - Berkshire Hathaway Energy - MidAmerican Energy Co. - 1	
Answer	Yes
Document Name	
Comment	
Likes 0	
Dislikes 0	
Response	
Thank you for your support.	
Darko Kovac, P.E. - Gainesville Regional Utilities - 1,3,5	
Answer	Yes
Document Name	
Comment	
Likes 0	
Dislikes 0	
Response	
Thank you for your support.	
Diana Aguas - CenterPoint Energy Houston Electric, LLC - 1 - Texas RE	

Answer	Yes
Document Name	
Comment	
Likes 0	
Dislikes 0	
Response	
Thank you for your support.	
Tim Kelley - Tim Kelley On Behalf of: Charles Norton, Sacramento Municipal Utility District, 3, 6, 4, 1, 5; Foung Mua, Sacramento Municipal Utility District, 3, 6, 4, 1, 5; Kevin Smith, Balancing Authority of Northern California, 1; Nicole Looney, Sacramento Municipal Utility District, 3, 6, 4, 1, 5; Ryder Couch, Sacramento Municipal Utility District, 3, 6, 4, 1, 5; Wei Shao, Sacramento Municipal Utility District, 3, 6, 4, 1, 5; - Tim Kelley, Group Name SMUD and BANC	
Answer	Yes
Document Name	
Comment	
Likes 0	
Dislikes 0	
Response	
Thank you for your support.	
Donna Wood - Tri-State G and T Association, Inc. - 1	
Answer	Yes
Document Name	
Comment	

Likes 0	
Dislikes 0	
Response	
Thank you for your support.	
Greg Sorenson - Greg Sorenson On Behalf of: Tremayne Brown, ReliabilityFirst , 10; - Greg Sorenson	
Answer	Yes
Document Name	
Comment	
Likes 0	
Dislikes 0	
Response	
Thank you for your support.	
David Melanson - NB Power Corporation - New Brunswick Power Transmission Corporation - 5	
Answer	Yes
Document Name	
Comment	
Likes 0	
Dislikes 0	
Response	
Thank you for your support.	
Jodi Yeary - AEP - 3	
Answer	Yes

Document Name	
Comment	
Likes 0	
Dislikes 0	
Response	
Thank you for your support.	
Brian Millard - Tennessee Valley Authority - 1,3,5,6 - SERC, Group Name TVA RBB	
Answer	Yes
Document Name	
Comment	
Likes 0	
Dislikes 0	
Response	
Thank you for your support.	
Phillip Martinez - Phillip Martinez On Behalf of: Richard Jackson, U.S. Bureau of Reclamation, 1, 5; - U.S. Bureau of Reclamation - 1 - WECC	
Answer	Yes
Document Name	
Comment	
Likes 0	
Dislikes 0	
Response	

Thank you for your support.	
Dermot Smyth - Con Ed - Consolidated Edison Co. of New York - 1, Group Name Con Edison	
Answer	Yes
Document Name	
Comment	
Likes 0	
Dislikes 0	
Response	
Thank you for your support.	
Dave Krueger - SERC Reliability Corporation - 10	
Answer	Yes
Document Name	
Comment	
Likes 0	
Dislikes 0	
Response	
Thank you for your support.	
Jason Chandler - Con Ed - Consolidated Edison Co. of New York - 6	
Answer	Yes
Document Name	
Comment	

Likes 0	
Dislikes 0	
Response	
Thank you for your support.	
Wendy Kalidass - U.S. Bureau of Reclamation - 5	
Answer	Yes
Document Name	
Comment	
Likes 0	
Dislikes 0	
Response	
Thank you for your support.	
Chantal Mazza - Chantal Mazza On Behalf of: Junji Yamaguchi, Hydro-Quebec (HQ), 1, 5; Nicolas Turcotte, Hydro-Quebec (HQ), 1, 5; - Chantal Mazza	
Answer	Yes
Document Name	
Comment	
Likes 0	
Dislikes 0	
Response	
Thank you for your support.	
Lincoln Burton - Con Ed - Consolidated Edison Co. of New York - 3	
Answer	Yes

Document Name	
Comment	
Likes 0	
Dislikes 0	
Response	
Thank you for your support.	
Alan Kloster - Alan Kloster On Behalf of: Jeremy Harris, Evergy, 3, 5, 1, 6; Kevin Frick, Evergy, 3, 5, 1, 6; Marcus Moor, Evergy, 3, 5, 1, 6; Tiffany Lake, Evergy, 3, 5, 1, 6; - Alan Kloster	
Answer	Yes
Document Name	
Comment	
Likes 0	
Dislikes 0	
Response	
Thank you for your support.	
Rachel Coyne - Texas Reliability Entity, Inc. - 10	
Answer	Yes
Document Name	
Comment	
Likes 0	
Dislikes 0	
Response	

Thank you for your support.	
Mark Flanary - Midwest Reliability Organization - 10	
Answer	Yes
Document Name	
Comment	
Likes 0	
Dislikes 0	
Response	
Thank you for your support.	
Zahid Qayyum - New York Power Authority - 5	
Answer	Yes
Document Name	
Comment	
Likes 0	
Dislikes 0	
Response	
Thank you for your support.	
Michelle Pagano - Con Ed - Consolidated Edison Co. of New York - 5	
Answer	Yes
Document Name	
Comment	

Likes 0	
Dislikes 0	
Response	
Thank you for your support.	
Rebika Yitna - Rebika Yitna On Behalf of: Roger Brand, MEAG Power, 3, 1; - Rebika Yitna	
Answer	Yes
Document Name	
Comment	
Likes 0	
Dislikes 0	
Response	
Thank you for your support.	
Ben Hammer - Western Area Power Administration - 1	
Answer	Yes
Document Name	
Comment	
Likes 0	
Dislikes 0	
Response	
Thank you for your support.	
Ruida Shu - Northeast Power Coordinating Council - 10, Group Name NPCC RSC	
Answer	Yes

Document Name	
Comment	
Likes 0	
Dislikes 0	
Response	
Thank you for your support.	
Robert Follini - Avista - Avista Corporation - 3	
Answer	Yes
Document Name	
Comment	
Likes 0	
Dislikes 0	
Response	
Thank you for your support.	
Chris Wagner - Santee Cooper - 1, Group Name Santee Cooper	
Answer	Yes
Document Name	
Comment	
Likes 0	
Dislikes 0	
Response	

Thank you for your support.	
Hillary Creurer - Allete - Minnesota Power, Inc. - 1	
Answer	Yes
Document Name	
Comment	
Likes 0	
Dislikes 0	
Response	
Thank you for your support.	
Joseph Scott - Lower Colorado River Authority - 5	
Answer	Yes
Document Name	
Comment	
Likes 0	
Dislikes 0	
Response	
Thank you for your support.	
Gail Elliott - Gail Elliott On Behalf of: Michael Moltane, International Transmission Company Holdings Corporation, 1; - Gail Elliott	
Answer	Yes
Document Name	
Comment	

Likes 0	
Dislikes 0	
Response	
Thank you for your support.	
Wesley Maurer - Lower Colorado River Authority - 1 - Texas RE	
Answer	Yes
Document Name	
Comment	
Likes 0	
Dislikes 0	
Response	
Thank you for your support.	
Carver Powers - Utility Services, Inc. - 4	
Answer	Yes
Document Name	
Comment	
Likes 0	
Dislikes 0	
Response	
Thank you for your support.	
Elizabeth Davis - Elizabeth Davis On Behalf of: Thomas Foster, PJM Interconnection, L.L.C., 2; - Elizabeth Davis	
Answer	Yes

Document Name	
Comment	
Likes 0	
Dislikes 0	
Response	
Thank you for your support.	
Jennie Wike - Jennie Wike On Behalf of: John Merrell, Tacoma Public Utilities (Tacoma, WA), 1, 4, 5, 6, 3; - Jennie Wike, Group Name Tacoma Power	
Answer	Yes
Document Name	
Comment	
Likes 0	
Dislikes 0	
Response	
Thank you for your support.	
Daniel Gacek - Exelon - 1, Group Name Exelon	
Answer	Yes
Document Name	
Comment	
Likes 0	
Dislikes 0	
Response	

Thank you for your support.	
Emma Halilovic - Hydro One Networks, Inc. - 1	
Answer	Yes
Document Name	
Comment	
Likes 0	
Dislikes 0	
Response	
Thank you for your support.	
Lexi Dobrzysnki - Lexi Dobrzysnki On Behalf of: Angela Dockter, Alliant Energy Corporation Services, Inc., 4; - Lexi Dobrzysnki	
Answer	
Document Name	
Comment	
Alliant Energy mirrors the MRO NSRF group Comments.	
Likes 0	
Dislikes 0	
Response	
Thank you for your support. Please see the response to the MRO NSRF's comments.	

2. Do you agree with the modifications made in CIP-014-4 with new Requirement R2 to address the issues identified in the SAR? If you do not agree, please provide your recommendation and, if appropriate, technical or procedural justification.	
Emma Halilovic - Hydro One Networks, Inc. - 1	
Answer	No
Document Name	2023-06 Draft_3_Comment_Form.docx
Comment	

See attached for recommendations and rationales.

R2 – Swap the order of R2 and R3; Comments:

- R2 – using "irrespective of ownership" is not acceptable because a transmission owner does not have the authority to require the location (GPS coordinates) of another entity's station unless that other entity is directly connected to them. E.g. a 44kV / 12 kV distribution station (DS) or a 115 kV / 34.5 kV station does not directly connect to the 230 kV transmission system. In fact, DS's are often outside the privy of the Reliability Coordinator too. If NERC would like these nearby stations tested (modelled with protection settings) for the potential of inducing system separation, system instability and uncontrolled cascading, then extend the Applicability of the standard to these non-transmission owner entities. In addition, the testing of these nearby facilities is unreasonable considering they are far from meeting Attachment 1 criteria.
- R2 - The focus of these "smaller" nearby stations is misplaced, as physical security is more threaten by other infrastructure such as railroads, paint factories, fireworks factories, gas stations, major highways with tankers containing explosive material, high-rise buildings etc…
- R2 – recommend not pursuing the requirement to electrically fault test these small nearby stations as there is no-benefit and is not practical to do so.

Likes 0	
Dislikes 0	
Response	

Thank you for your comments. The drafting team made revision to Requirement R2 and clarified that only BES stations are in scope for proximate stations. The drafting team is tasked to protect the electrical grid by considering adjacent Transmission stations or Transmission substations of differing ownership, not railroads, paint factories, fireworks factories, gas stations, major highways with tankers containing explosive material, high-rise buildings. After the clarification being made (by adding BES), the drafting team believes that there is a risk by losing multiple BES stations as once.	
Robert Blackney - Edison International - Southern California Edison Company - 1	
Answer	No
Document Name	
Comment	
See comments submitted by Edison Electric Institute.	
Likes 0	
Dislikes 0	
Response	
Thank you for your comment. Please see responses to the EEI's comments.	
Lucinda Bradshaw - Lucinda Bradshaw On Behalf of: Byron Booker, Oncor Electric Delivery, 1; - Lucinda Bradshaw	
Answer	No
Document Name	
Comment	
Oncor appreciates that the ambiguous sub-requirements have been removed from Requirement R2, but ambiguity remains in the proposed revised Requirement R2. As a result, Oncor does not fully agree with the modifications made in new Requirement R2.	

Oncor's previous comment on revised Requirement R2 requested clarification as to what voltage classes are applicable for proximate Transmission stations and Transmission substations. In the Drafting Team's response, the Drafting Team clarified that proximate Transmission stations and Transmission substations should only be considered if they are part of the Bulk Electric System (operated at 100 kV or higher). At no point is this clarified in the language of the revised Standard. Because the Standard currently only identifies an exclusion for voltages below 200 kV, Oncor recommends CIP-014-4 Requirement R2 be clarified by adding a statement that proximate Transmission stations and Transmission substations only require consideration if they are part of the Bulk Electric System. Oncor proposes that the following sentence be added to the end of the existing proposed revised Requirement 2: "***Transmission Owners only need to identify proximate Transmission station(s) and Transmission substation(s) that are part of the Bulk Electric System.***"

Oncor also previously commented on the burdensome task of coordination with other parties to track Transmission stations and Transmission substations that are owned by other parties to determine if any stations are within the specified distance threshold. The Drafting Team clarified that there is no need to coordinate with another entity; rather, the Transmission Owner (TO) may use "common public access tools" to identify proximate Transmission stations and Transmission substations. While the use of such tools (*e.g.*, GIS data) may alleviate coordination burdens, it introduces new burdens on TOs to manually review each and every applicable Transmission station and Transmission substation for nearby stations. Oncor has three additional concerns that should be noted related to the use of GIS data:

· GIS data for an area can be low resolution, limited, or entirely unavailable.

· Another complication that could arise is that TOs may unknowingly use GIS data that is out-of-date and no longer representative of the subject area. For example, if a TO used the most recent imagery available from Google Earth to perform its review of an area in 2025, and that imagery was created in 2023, then that imagery would not include any nearby Transmission stations that were built in 2024. Then the TO's review performed in 2025 would not include any proximate stations built in 2024.

· Even if a TO uses current year GIS data in an effort to identify proximate Transmission stations and Transmission substations, this still would not allow the TO to identify planned but not completed proximate stations. For example, a TO could use GIS data to identify proximate stations in 2025, but if in 2026 a new proximate station was built, then the proximate station built in 2026 would not be accounted for in the 2025 review.

Likes 0	
Dislikes 0	
Response	

Thank you for your comments and suggestion. The drafting team did take the feedback and added BES into Requirement R2. The drafting team is also aware that the GIS is not 100% accurate and Google Earth cannot see future planned stations. The drafting team did clarify with this new revision by adding "existing BES".	
Wesley Maurer - Lower Colorado River Authority - 1 - Texas RE	
Answer	No
Document Name	
Comment	
We do not agree with the changes to R2 as currently written. The use of the term "identify" is unclear, it's not obvious whether this requires documentation or ongoing tracking. There's also no voltage threshold provided, adding a voltage threshold could provide more clarity and keep from including stations that aren't relevant from a security perspective. It is also uncertain what is expected once these substations are identified, particularly if they are owned by another entity.	
Likes 0	
Dislikes 0	
Response	
Thank you for your comments. The drafting team added "existing BES" into Requirement R2. This should clear the confusion of "identify" voltage threshold. The use of the term "identify" requires documentation once every 36 calendar months.	
Gail Elliott - Gail Elliott On Behalf of: Michael Moltane, International Transmission Company Holdings Corporation, 1; - Gail Elliott	
Answer	No
Document Name	
Comment	
ITC supports the distance of 1500 feet or 457 meters (the shortest distance, measured substation fence line to substation fence line) selected by the drafting team for proximate Transmission station(s) and Transmission substation(s). However, we are concerned Transmission stations and Transmission substations owned by other entities who CIP-014 may or may not be applicable cannot be compelled to provide the information necessary for entities to comply with CIP-014. Further, while GIS tools can identify stations and	

substations within the specified proximity, it can be difficult to determine whose station they might be and if they are Transmission station(s) or Transmission substation(s) ITC suggests narrowing the scope to existing BES Transmission station(s) and BES Transmission substation(s) which are owned by the applicable entity. R2. Each Transmission Owner shall identify proximate **BES** Transmission station(s) and **BES** Transmission substation(s), owned by the applicable TO, within 1500 feet or 457 meters (the shortest distance, measured substation fence line to substation fence line) of an applicable Transmission station or Transmission substation identified in Requirement R1. [Violation Risk Factor: Medium; Time-Horizon: Long-term Planning] ITC asks the drafting team to consider adding content to the technical rationale describing ways that an entity can be confident of to demonstrate compliance that are not cost prohibitive for companies with facilities in numerous states. Concern is identifying stations not owned by the TO.	
Likes 0	
Dislikes 0	
Response	
Thank you for your comments and suggestion. As recommended, the drafting team did add “existing BES” into Requirement R2.	
Joseph Scott - Lower Colorado River Authority - 5	
Answer	No
Document Name	
Comment	
We do not agree with the changes to R2 as currently written. The use of the term “identify” is unclear, it’s not obvious whether this requires documentation or ongoing tracking. There’s also no voltage threshold provided, adding a voltage threshold could provide more clarity and keep from including stations that aren’t relevant from a security perspective. It is also uncertain what is expected once these substations are identified, particularly if they are owned by another entity.	
Likes 0	

Dislikes 0	
Response	
Thank you for your comments. The drafting team added “existing BES” into Requirement R2. This should clear the confusion of “identify” voltage threshold. The use of the term “identify” requires documentation once every 36 calendar months.	
Kristine Martz - Edison Electric Institute - NA - Not Applicable - NA - Not Applicable	
Answer	No
Document Name	
Comment	
EEI supports the distance of 1500 feet or 457 meters (the shortest distance, measured substation fence line to substation fence line) selected by the drafting team for proximate Transmission station(s) and Transmission substation(s). However, we are concerned Transmission stations and Transmission substations owned by non-registered entities are not compelled to provide the information necessary for entities to comply with CIP-014. Further, while GIS tools can identify stations and substations within the specified proximity, it can be difficult to determine if they are Transmission station(s) or Transmission substation(s). EEI suggests narrowing the scope to BES Transmission station(s) and BES Transmission substation(s) which are owned by registered entities who would be compelled to share CIP-014 related information. R2. Each Transmission Owner shall identify proximate **BES** Transmission station(s) and **BES** Transmission substation(s), irrespective of ownership, within 1500 feet or 457 meters (the shortest distance, measured substation fence line to substation fence line) of an applicable Transmission station or Transmission substation identified in Requirement R1. [Violation Risk Factor: Medium; Time-Horizon: Long-term Planning] EEI asks the drafting team to consider adding content to the technical rationale describing ways that an entity may choose to accurately measure distances and demonstrate compliance. For instance, Google Earth measurements, leveraging internal personnel, hiring a surveying company etc.	
Likes 0	
Dislikes 0	
Response	

Thank you for your comments. As suggested, the drafting team added “existing BES” into Requirement R2. BES will apply to NERC Registered Entities. Since it’s existing, Goole Earth should be able to provide a distance.	
Hillary Creurer - Allete - Minnesota Power, Inc. - 1	
Answer	No
Document Name	
Comment	
Minnesota Power supports EEI’s comments.	
Likes 0	
Dislikes 0	
Response	
Thank you for your comment. Please see responses to EEI’s comments.	
Selene Willis - Edison International - Southern California Edison Company - 5	
Answer	No
Document Name	
Comment	
"Please see EEI Comments"	
Likes 0	
Dislikes 0	
Response	
Thank you for your comment. Please see responses to EEI’s comments.	
Ruida Shu - Northeast Power Coordinating Council - 10, Group Name NPCC RSC	
Answer	No
Document Name	

Comment
The use of the word “proximate” appears to imply an estimation and leaves the determination of what constitutes a nearby Transmission Substation or Station to the discretion of the entity. However, the requirement specifies a precise distance and a method for measuring that distance. NPCC RSC recommends removing the word “proximate.” NPCC RSC also recommends modifying Requirement R2 to read: “Transmission station(s) and Transmission substation(s) identified in CIP-002.” If the intent is to conduct a separate process or analysis to identify applicable assets, that assessment should be performed under CIP-002.

Likes 0	
Dislikes 0	

Response
Thank you for your comments. The word “proximate” has been removed as recommended.

Rebika Yitna - Rebika Yitna On Behalf of: Roger Brand, MEAG Power, 3, 1; - Rebika Yitna

Answer	No
Document Name	

Comment
Consider putting back the "line of sight" and "ease of access" language since physical attacks or the likelihood of physical attacks could be evaluated based on how easily accessible (physically) stations are to one another.

Likes 0	
Dislikes 0	

Response
Thank you for your comments. So many registered entities commented that "line of sight" and "ease of access" language is vague and want them to be removed. The drafting team used the distance as bright-line to make it less confusing.

Michelle Pagano - Con Ed - Consolidated Edison Co. of New York - 5

Answer	No
Document Name	
Comment	
We do not agree with using proximity as the only triggering factor for this requirement. An entity (particularly urban utilities) may have transmission stations within 1,500 feet of each other but due to their design (i.e., Open Air vs. Enclosed) the impact of a possible physical attack can be mitigated. It would be impossible to have simultaneous faults at the applicable and proximate station under those circumstances. An example of a revised R2: R2: Each Transmission Owner shall identify proximate open-air Transmission station(s) and Transmission substation(s), irrespective of ownership, within 1500 feet or 457 meters (the shortest distance, measured substation fence line to substation fence line) of an applicable Transmission station or Transmission substation identified in Requirement R1 Additionally, the technical rationale does not include the name or a link to the study that was the basis for this modified requirement; knowing what specific reliability concerns this modified requirement was intended to mitigate would be helpful.	
Likes 0	
Dislikes 0	
Response	
Thank you for your comments. The drafting team further reviewed your proposal and does not feel comfortable excluding anything, because it is very difficult to justify that open-air vs. enclosed stations have different impact.	
Zahid Qayyum - New York Power Authority - 5	
Answer	No
Document Name	
Comment	
NYPA supports NPCC RSC comments.	
Likes 0	

Dislikes 0	
Response	
Thank you for your comments. The word “proximate” has been removed as recommended.	
Jamison Cawley - Nebraska Public Power District - 1	
Answer	No
Document Name	
Comment	
We disagree with the 1,500 feet requirement as there is no clear definition of the initiating disturbance. The initiating event could be anything from gunshots up to a “smoking crater” scenario and the impacts to adjacent substations could range from minimal or moderate damage to severe damage, all of which are undefined in this standard. The Physical Security standard was proposed to enhance the physical security at critical BES substations, but there are no enhanced physical security defense mechanisms which can protect a substation from a missile attack which is the only feasible way to result in a “Smoking Crater” scenario at multiple substations. So, the attack scenarios need to be plausible so that realistic physical security enhancements can be deployed to facilitate improvements in the security posture at critical BES substations. The “Smoking Crater” scenario is not plausible and thus the 1,500 feet impact zone is not justified. Assuming a simultaneous 3-Phase fault on every element in a large substation along with each and every element of an adjacent substation within 1,500 feet cannot be technically justified and therefore cannot be a requirement for the risk assessment. Experienced TOs know through prior disturbance analysis events, that 3-phase faults are rare at a single point in the entire transmission system, so they should not be assumed to occur at one exact point in time on multiple elements at multiple substations covering large distances.	
Likes 1	Nebraska Public Power District, 5, Bender Ronald
Dislikes 0	
Response	
Thank you for your comments. A few documents that are referenced in the Technical Rationale Document show physical attacks could really damage the electric grid. The distance used (1500 feet) is justified.	
Timothy Singh - Timothy Singh On Behalf of: Israel Perez, Salt River Project, 3, 6, 5, 1; Laura Somak, Salt River Project, 3, 6, 5, 1; Mathew Weber, Salt River Project, 3, 6, 5, 1; Matthew Jaramilla, Salt River Project, 3, 6, 5, 1; - Timothy Singh	
Answer	No

Document Name	
Comment	
SRP recommends establishing clearer criteria for determining station applicability. As currently written, the requirement is open to interpretation, specifically regarding which voltage levels and which stations are included under the phrase " of any applicable Transmission station." To avoid ambiguity, we recommend clarifying section 4 or specifying that Requirement R2 applies only to Transmission stations or Transmission substations identified by the Transmission Owner through the risk assessment process described in Requirement R1, in accordance with the Applicability criteria outlined in Attachment 1.	
Likes 0	
Dislikes 0	
Response	
Thank you for your comments. Please see revised Requirement R2. The drafting team added BES to clarify applicability. Also, the SAR directs the drafting team to consider neighboring utilities for assessment.	
Alan Kloster - Alan Kloster On Behalf of: Jeremy Harris, Evergy, 3, 5, 1, 6; Kevin Frick, Evergy, 3, 5, 1, 6; Marcus Moor, Evergy, 3, 5, 1, 6; Tiffany Lake, Evergy, 3, 5, 1, 6; - Alan Kloster	
Answer	No
Document Name	
Comment	
Evergy supports and incorporates by reference the comments of the Edison Electric Institute for question #2.	
Likes 0	
Dislikes 0	
Response	
Thank you for your comments. Please see responses to the EEI's comments.	
Lincoln Burton - Con Ed - Consolidated Edison Co. of New York - 3	
Answer	No

Document Name	
Comment	
We do not agree with using proximity as the only triggering factor for this requirement. An entity (particularly urban utilities) may have transmission stations within 1,500 feet of each other but due to their design (i.e., Open Air vs. Enclosed) the impact of a possible physical attack can be mitigated. It would be impossible to have simultaneous faults at the applicable and proximate station under those circumstances. An example of a revised R2: R2: Each Transmission Owner shall identify proximate open-air Transmission station(s) and Transmission substation(s), irrespective of ownership, within 1500 feet or 457 meters (the shortest distance, measured substation fence line to substation fence line) of an applicable Transmission station or Transmission substation identified in Requirement R1 Additionally, the technical rationale does not include the name or a link to the study that was the basis for this modified requirement; knowing what specific reliability concerns this modified requirement was intended to mitigate would be helpful.	
Likes 0	
Dislikes 0	
Response	
Thank you for your comments. The drafting team further reviewed your proposal and does not feel comfortable excluding anything, because it is very difficult to justify that open-air vs. enclosed stations have different impact.	
Chantal Mazza - Chantal Mazza On Behalf of: Junji Yamaguchi, Hydro-Quebec (HQ), 1, 5; Nicolas Turcotte, Hydro-Quebec (HQ), 1, 5; - Chantal Mazza	
Answer	No
Document Name	
Comment	
The use of the word “proximate” appears to imply an estimation and leaves the determination of what constitutes a nearby Transmission Substation or Station to the discretion of the entity. However, the requirement specifies a precise distance and a method for measuring that distance. NPCC RSC recommends removing the word “proximate.”	

NPCC RSC also recommends modifying Requirement R2 to read: "Transmission station(s) and Transmission substation(s) identified in CIP-002." If the intent is to conduct a separate process or analysis to identify applicable assets, that assessment should be performed under CIP-002.	
Likes 0	
Dislikes 0	
Response	
Thank you for your comments. The word "proximate" has been removed as recommended.	
Jason Chandler - Con Ed - Consolidated Edison Co. of New York - 6	
Answer	No
Document Name	
Comment	
We do not agree with using proximity as the only triggering factor for this requirement. An entity (particularly urban utilities) may have transmission stations within 1,500 feet of each other but due to their design (i.e., Open Air vs. Enclosed) the impact of a possible physical attack can be mitigated. It would be impossible to have simultaneous faults at the applicable and proximate station under those circumstances. An example of a revised R2: R2: Each Transmission Owner shall identify proximate open-air Transmission station(s) and Transmission substation(s), irrespective of ownership, within 1500 feet or 457 meters (the shortest distance, measured substation fence line to substation fence line) of an applicable Transmission station or Transmission substation identified in Requirement R1 Additionally, the technical rationale does not include the name or a link to the study that was the basis for this modified requirement; knowing what specific reliability concerns this modified requirement was intended to mitigate would be helpful.	
Likes 0	
Dislikes 0	

Response	
Thank you for your comments. The drafting team further reviewed your proposal and does not feel comfortable excluding anything, because it is very difficult to justify that open-air vs. enclosed stations have different impact.	
Steven Belle - Dominion - Dominion Virginia Power - 1	
Answer	No
Document Name	
Comment	
Clarification is needed that adjacent stations only refers to BES stations. Additionally, the 1500ft distance is unnecessarily perscriptive and should be provided only as guidance. Each entity's physical security experts, in concert with 3rd party evaluators, should have latitude to determine the apporpriate distance to consider givent the unique characteristics and vulnerabilities of each site under evalution.	
Likes 0	
Dislikes 0	
Response	
Thank you for your comments. The drafting team has added BES to Requirement R2. The drafting team used 1500 feet to satisfy work scope number 5 from the SAR.	
Dermot Smyth - Con Ed - Consolidated Edison Co. of New York - 1, Group Name Con Edison	
Answer	No
Document Name	
Comment	
We do not agree with using proximity as the only triggering factor for this requirement. An entity (particularly urban utilities) may have transmission stations within 1,500 feet of each other but due to their design (i.e., Open Air vs. Enclosed) the impact of a possible physical attack can be mitigated. It would be impossible to have simultaneous faults at the applicable and proximate station under those circumstances. An example of a revised R2: R2: Each Transmission Owner shall identify proximate open-air Transmission station(s) and Transmission substation(s), irrespective of ownership, within 1500 feet or 457 meters (the shortest distance, measured substation fence line to substation fence line) of an	

applicable Transmission station or Transmission substation identified in Requirement R1 Additionally, the technical rationale does not include the name or a link to the study that was the basis for this modified requirement; knowing what specific reliability concerns this modified requirement was intended to mitigate would be helpful.	
Likes 0	
Dislikes 0	
Response	
Thank you for your comments. The drafting team further reviewed your proposal and does not feel comfortable excluding anything, because it is very difficult to justify that open-air vs. enclosed stations have different impact.	
Matt Carden - Southern Company - Southern Company Services, Inc. - 1	
Answer	No
Document Name	
Comment	
Southern Company proposes the language below for added flexibility and recognition of risk mitigations similar to the flexibility proposed in Draft 2 that Southern Company agreed with and voted yes. **R2**. Each Transmission Owner shall identify proximate Transmission station(s) and Transmission substation(s), irrespective of ownership **2.1** Transmission station(s) and Transmission substation(s) within 500 feet or 152 meters (the shortest distance, measured substation fence line to substation fence line) of an applicable Transmission station or Transmission substation identified in Requirement R1 **or:**	

2.2 Transmission station(s) and Transmission substation(s) between 500 feet or 152 meters and 1500 feet or 457 meters with line of sight from a single location without obstruction of an applicable Transmission station or Transmission substation identified in Requirement R1

or:

2.3 Transmission station(s) and Transmission substation(s) between 500 feet or 152 meters and 1500 feet or 457 meters with ease of access from a common roadway that exists between an applicable Transmission station or Transmission substation identified in Requirement R1

Likes 0	
Dislikes 0	

Response
Thank you for your comments. The drafting team made modifications to Requirement R2.

Misty Carneal - Duke Energy - 1,3,5,6 - Texas RE,SERC,RF	
Answer	No
Document Name	

Comment

Duke Energy supports EEI comments that suggest further clarifying the scope to BES Transmission station(s) and BES Transmission substation(s) which are owned by registered entities.

Duke Energy recommends the following:

R2. Each Transmission Owner shall identify proximate **BES** Transmission station(s) and **BES** Transmission substation(s), irrespective of ownership, within 1500 feet or 457 meters (the shortest distance, measured substation fence line to substation fence line) of an

applicable Transmission station or Transmission substation identified in Requirement R1. [Violation Risk Factor: Medium; Time-Horizon: Long-term Planning]	
Likes 0	
Dislikes 0	
Response	
Thank you for your comments and recommendation. The drafting team added BES as recommended.	
Jodi Yeary - AEP - 3	
Answer	No
Document Name	
Comment	
AEP is supportive of the modifications. However, specifying fence line to fence line is too prescriptive. Many utilities already have systems of record for station coordinates/addresses that are currently or can be used for distance calculations that are not based on fence boundaries. This prescriptive boundary language adds unnecessary compliance burden and possibly requires TOs to create and maintain a new system of record. AEP's preference is to leave boundary definitions to the TOs discretion as long as their methodology for distance calculation is documented.	
Likes 0	
Dislikes 0	
Response	
Thank you for your comments.	
Josh Schumacher - Black Hills Corporation - 6, Group Name Black Hills Corporation Segments 1, 3, 5, 6	
Answer	No
Document Name	
Comment	

Black Hills Corporation agrees with EEI regarding the new requirements in R2. We support the distance of 1500 feet measured between the closest sections of substation fencing. However, we have concerns about non-registered entities not being compelled to provide information necessary for registered entities to comply with CIP-014-4. Black Hills Corporation agrees with EEI's recommendation of adding the 'BES' verbiage to Transmission station and Transmission substation to reduce the scope to entities who would be compelled to comply with CIP-014-4. We also agree with the suggestion to add acceptable ways to measure the distance between substations into the technical rationale for clarity.	
Likes 0	
Dislikes 0	
Response	
Thank you for your comments. The drafting team added BES as recommended.	
Isidoro Behar - Long Island Power Authority - 1	
Answer	No
Document Name	
Comment	
PSEG Long Island Agrees with the majority of changes provided to R2, including the fence line to fence line criteria, revision to distance (1500ft, and removal of criteria previously in 2.1 and 2.2. One improvement would be to include language, to prevent ambiguity of responsibility. Suggested change: "***Each Transmission owner with applicable Transmission station(s) and Transmission substation(s) identified in Requirement R1 shall***….." . This language aims to prevent adjacent transmission owners whose facilities do not meet the criteria identified in R1 from speculating about the proximate facilities, and future projects, of adjacent transmission owners. It's reasonable that the TO's facility who meets the criteria under R1 could identify electrical transmission facilities within the 1500ft distance outlined in R2.	
Likes 0	
Dislikes 0	
Response	

Thank you for your comments. The drafting team modified Requirement R2 as recommended.	
Bob Cardle - Bob Cardle On Behalf of: Marco Rios, Pacific Gas and Electric Company, 3, 1, 5; Sandra Ellis, Pacific Gas and Electric Company, 3, 1, 5; Tyler Brun, Pacific Gas and Electric Company, 3, 1, 5; - Bob Cardle	
Answer	No
Document Name	
Comment	

1) PGAE does not agree with the language of “irrespective of ownership". PGAE does not have authority to evaluate other entities facilities and potentially create a document of record that other entities could be held accountable. Also, PGAE does not want a compliance obligation tied to an entity that we have to authority over.

2) Reviewing the bomb threat standoff card, the reference to 1700 feet of standoff appears to be a reference to the mandatory evacuation distance for a 40 foot Semi-Truck trailer filled with 60,000 pounds of explosives. PGAE does not agree that Vehicle-Borne Improvised Explosive Device (VBIED) are a prevalent enough attack vector that private utilities should be required to protect against them. There are far greater immediate threats.

3) “Proximate Station” Screen-1500 ft Fence-to-Fence Criterion (R2) - The new requirement to list any transmission station located within 1500 ft of a candidate facility acknowledges the risk of multi station, single attack scenarios, yet the fixed distance appears arbitrary. To prevent over or under inclusion, especially in dense urban corridors, PGAE recommends that NERC cite the threat analysis that produced the 1500 ft requirement and allow entities to justify an alternative distance if a quantified risk assessment shows equivalent or better coverage. This added clarity will reduce regional interpretation disputes and avoid unnecessary modelling effort. This requirement also presents substantial implementation challenges related to inter-utility coordination. Assessing the physical security implications of an attack on a neighboring utility's substation, particularly when there is no existing joint ownership or operational agreement, will necessitate new formal data-sharing protocols and coordination mechanisms. This could lead to administrative complexities, delays in risk assessments, and potential disputes over sensitive information sharing. We urge NERC to provide specific guidance or a recommended template for inter-utility agreements to facilitate this critical coordination.

Likes 0	
Dislikes 0	
Response	

Thank you for your comments. Workscope number 5 directs the drafting team to account for adjacent Transmission stations or Transmission substations of differing ownership. Based on the references listed in the Technical Rationale Document, 1500 feet is justified.	
David Melanson - NB Power Corporation - New Brunswick Power Transmission Corporation - 5	
Answer	No
Document Name	
Comment	
NB Power supports NPCCs comments: "The use of the word “proximate” appears to imply an estimation and leaves the determination of what constitutes a nearby Transmission Substation or Station to the discretion of the entity. However, the requirement specifies a precise distance and a method for measuring that distance. NPCC RSC recommends removing the word “proximate.” NPCC RSC also recommends modifying Requirement R2 to read: “Transmission station(s) and Transmission substation(s) identified in CIP-002.” If the intent is to conduct a separate process or analysis to identify applicable assets, that assessment should be performed under CIP-002."	
Likes 0	
Dislikes 0	
Response	
Thank you for your comment. The word “proximate” has been removed as recommended.	
Mark Garza - FirstEnergy - FirstEnergy Corporation - 4, Group Name FE Voter	
Answer	No
Document Name	

Comment
FirstEnergy supports EEI Comments which state: EEI supports the distance of 1500 feet or 457 meters (the shortest distance, measured substation fence line to substation fence line) selected by the drafting team for proximate Transmission station(s) and Transmission substation(s). However, we are concerned Transmission stations and Transmission substations owned by non-registered entities are not compelled to provide the information necessary for entities to comply with CIP-014. Further, while GIS tools can identify stations and substations within the specified proximity, it can be difficult to determine if they are Transmission station(s) or Transmission substation(s). EEI suggests narrowing the scope to BES Transmission station(s) and BES Transmission substation(s) which are owned by registered entities who would be compelled to share CIP-014 related information. R2. Each Transmission Owner shall identify proximate **BES** Transmission station(s) and **BES** Transmission substation(s), irrespective of ownership, within 1500 feet or 457 meters (the shortest distance, measured substation fence line to substation fence line) of an applicable Transmission station or Transmission substation identified in Requirement R1. [Violation Risk Factor: Medium; Time-Horizon: Long-term Planning] EEI asks the drafting team to consider adding content to the technical rationale describing ways that an entity may choose to accurately measure distances and demonstrate compliance. For instance, Google Earth measurements, leveraging internal personnel, hiring a surveying company etc.

Likes 0	
Dislikes 0	

Response
Thank you for your comment. Please see revised Standard and responses to the EEI's comments. BES has been added in this draft as recommended.

Randy Peters - Manitoba Hydro - 1,3,5,6 - MRO	
Answer	No
Document Name	

Comment

The technical rationale is not clear for defining the hard limit of 1500 feet as the shortest distance between two substations based on the information presented in a reference guide developed to protect people from a bomb threat, as this is not the only possible hazard addressed by CIP-014. After further review Manitoba Hydro believes the previous criteria in draft-2 are very clear and provide some flexibility for TOs to develop their own proximity criteria. Such guidelines developed by America's Cyber Defense Agency can be referenced as guideline documents by entities when developing their criteria, but it is not recommended to bring those recommendations into a NERC standard as hard limits. If the SDT believed there was a reliability gap or a risk in the CIP-014-4-draft-2 (R2), then the SDT could think about adding another sub-requirement for TOs to develop a documented criteria or include a criteria into the TO's risk assessment methodology .	
Likes 0	
Dislikes 0	
Response	
Thank you for your comments. Based on the references listed in the Technical Rationale Document, 1500 feet is justified.	
Andrew Smith - APS - Arizona Public Service Co. - 5	
Answer	No
Document Name	
Comment	
AZPS agrees with comments submitted by EEI on behalf of their members to narrow the scope of proximate Transmission station(s) or Transmission substation(s) to BES Transmission station(s) and Transmission substation(s) which are owned by registered entities. AZPS agrees with EEI comments that it would be appreciated to consider adding more detail to Measurement M2 describing intended evidence that the distance has been accurately measured. AZPS also agrees with EEI comments that clarification on if a site is identified as part of Requirement R2 and is owned by a different company how that applies to R8-R10.	
Likes 0	

Dislikes 0	
Response	
Thank you for your comment. Please see revised Standard and responses to the EEI's comments. BES has been added in this draft as recommended.	
Greg Sorenson - Greg Sorenson On Behalf of: Tremayne Brown, ReliabilityFirst , 10; - Greg Sorenson	
Answer	No
Document Name	
Comment	
Consider the addition of the 36 calendar months timeframe to this requirement to avoid confusion around when this should be completed.	
Likes 0	
Dislikes 0	
Response	
Thank you for your comment. The drafting team discussed adding 36 calendar months into this Requirement; it seems like another clock has been added and would cause more confusion. Therefore, the drafting team decided to leave it alone.	
Donna Wood - Tri-State G and T Association, Inc. - 1	
Answer	No
Document Name	
Comment	
Tri-State recommends the following: R2 should exclude Transmission stations or substations that are below 200 kV from being considered proximate Transmission stations or substations. Without this exception, the requirement 3.3.2 that faults on proximate stations be studied would result in faults on low voltage systems being studied, despite the general intention of CIP-014 to exclude low voltage stations.	

R2 should permit an exception for stations or substations that are not electrically close despite physical proximity. Substations may be physically close, but not have any transmission line connecting them, such that they are functionally distant for power flow and transient stability purposes. While the substation may be damaged/removed by the same attack, they would not be impacted by each other's faults and would be cleared separately. In addition, the "proximate" substation in this circumstance will frequently be owned by another entity, such that entities will have to perform studies on systems that are entirely owned by others.	
Likes 0	
Dislikes 0	
Response	
Thank you for your comment and recommendation. Please see revised language for Requirement R2. Adding BES clears the confusion. Workscope 5 from the SAR directs the drafting team to account for adjacent Transmission stations or Transmission substations of differing ownership.	
Diana Aguas - CenterPoint Energy Houston Electric, LLC - 1 - Texas RE	
Answer	No
Document Name	
Comment	
No, CenterPoint Energy Houston Electric, LLC (CEHE) agrees with comments as submitted by the Edison Electric Institute (EEI).	
Likes 0	
Dislikes 0	
Response	
Thank you for your comment. Please see responses to the EEI's comments.	
Tamarra Hardie - Public Utility District No. 1 of Chelan County - 6, Group Name CHPD	

Answer	No
Document Name	

Comment

The rationale for the 1500 feet requirement refers to the DHS-DOJ Bomb Threat Stand-off Card for semi-trailier type threats as justification for including this number in R2. However, the distances on the Stand-off Card are related to the mandated personnel evacuation distances for a variety of bomb threats, not necessarily damage distances for these threats. For instance, it would be recommended to use a number that is based upon historical and/or technical research for damage distance of semi-trailer type bomb threats rather than the guidance for safe personnel evacuation distance when considering which stations may be impacted by a bombing event.

Additionally, the measurement from substation fence line to substation fence line can present some unrealistic distance scenarios for CIP-014 assessments, especially for substations that share a fence line with another substation and are located within 1500 feet of a third station. There are situations under these conditions where equipment distances may far exceed 1500 feet, which is already a distance determined by evacuation mandates and not by technically-supported damage distances. For instance, a substation may have a large fenced area with power equipment positioned within the fence perimeter in such a way that distances may far exceed 1500 feet from the proposed event blast location to adjacent “proximate” facilities but would still need to be assessed based upon the proposed R2 draft 3 language.

It is recommended to modify this language to be less prescriptive with this distance requirement and instead allow utilities to either:

- Use the provided R2 distance, whether that is the current revision’s 1500 foot requirement or a distance based upon damage distances (Note: It is preferable the distance number be based upon technically-supported damage distances rather than mandatory evacuation distances, as mentioned above.)

OR

- Allow utilities to select their own distance for identifying proximate stations but require utilities to provide rationale within their CIP-014 methodologies and/or assessments for why they selected a different distance threshold or excluded proximate stations from identification.

It is requested that NERC provide additional guidance or DHS/DOJ/CISA resources for damage distances of various bomb threat types in a similar fashion to the stand-off card for evacuation distances. This would allow R2 to address the intent of the SAR by requiring utilities to

assess semi-trailer type bomb threats to their power systems while also provide additional assessment flexibility and avoiding additional compliance assessment burden for unreasonable scenarios.	
Likes 0	
Dislikes 0	
Response	
Thank you for your comments and recommendations. Workscope 5 from the SAR directs the drafting team to account for adjacent Transmission stations or Transmission substations of differing ownership. Based on the reference listed in the Technical Rationale Document, 1500 feet seems reasonable.	
Jeffrey Streifling - NB Power Corporation - 1	
Answer	No
Document Name	
Comment	
The use of the word “Proximate” seem to intend an estimation and is at the discretion of the entity of what is a close Transmission Substation or Station. Then the requirement states a specific distance and a way to measure that distance. TFIST suggest removing the word “Proximate”.	
Likes 0	
Dislikes 0	
Response	
Thank you for your comment. The drafting team removed the word “proximate” as recommended.	
Melanie Wong - Seminole Electric Cooperative, Inc. - 5	
Answer	No
Document Name	
Comment	

Likes 0	
Dislikes 0	
Response	
Thank you for your feedback.	
Kennedy Meier - Electric Reliability Council of Texas, Inc. - 2	
Answer	Yes
Document Name	
Comment	
ERCOT joins the comments submitted by the IRC SRC and adopts them as its own.	
Likes 0	
Dislikes 0	
Response	
Thank you for your support.	
Jennie Wike - Jennie Wike On Behalf of: John Merrell, Tacoma Public Utilities (Tacoma, WA), 1, 4, 5, 6, 3; - Jennie Wike, Group Name Tacoma Power	
Answer	Yes
Document Name	
Comment	
Tacoma Power supports the specific distance of 1500 feet specified in R2. Typically values specified in dual units are listed as “1500 feet (457 meters)” rather than “1500 feet or 457 meters”. If possible, Tacoma Power recommends adjusting the overall structure of R2 to format the distance measurements with meters in parenthesis rather than as an or statement.	
Likes 0	
Dislikes 0	

Response	
Thank you for your support.	
Monika Montez - California ISO - 2 - WECC, Group Name ISO/RTO Council Standards Review Committee (SRC)	
Answer	Yes
Document Name	
Comment	
The ISO/RTO Council (IRC) Standards Review Committee (SRC) recommends that the drafting team should account for the fact that the Transmission Owner might be the only entity that has the information needed to determine which Transmission stations or substations are within 1500 feet or 457 meters of an applicable Transmission station or substation under Requirement R2. Consequently, entities performing unaffiliated third-party verifications under Requirement R6 may not be able to verify that a Transmission Owner has properly identified all Transmission stations or Transmission substations within 1500 feet or 457 meters of applicable stations or substations identified under Requirement R1. As a result, these unaffiliated third parties may need to rely on data provided by the TO when no other data is available, which could undermine the usefulness of unaffiliated third-party verifications.	
Likes 0	
Dislikes 0	
Response	
Thank you for your support and comments.	
Kelley Sargent - Puget Sound Energy, Inc. - 3	
Answer	Yes
Document Name	
Comment	
Although the requirement for proximity is simplified from past versions, it is missing the possibility of 2 non-applicable stations (ex. each station with 3-230 kV lines) that if considered proximate (within 1500 feet), may together meet the Applicability criteria. Such a station pair would be missed out from CIP-14-4 requirement R2, as stated currently. Is this an acceptable risk to the interconnection?	

Likes 0	
Dislikes 0	
Response	
Thank you for your support and comments.	
Carver Powers - Utility Services, Inc. - 4	
Answer	Yes
Document Name	
Comment	
1. Requesting clarification on the proposed capitalized term “Transmission”. This is not defined by NERC. USV suggests utilizing the term BES transmission stations and BES transmission substations. 2. USV suggest removing the term “proximate” as it does not provide clarity to the requirement. The proposed language states a specific distance and the term proximate does not align due to it suggesting an estimate or approximate value.	
Likes 0	
Dislikes 0	
Response	
Thank you for your support and comments. The drafting team has added “BES’ and removed “proximate” as recommended.	
Dan Perry - TXNM Energy - 1,3,5 - WECC,Texas RE	
Answer	Yes
Document Name	
Comment	
TXNM Energy agress with EEI comments	
Likes 0	

Dislikes 0	
Response	
Thank you for your support. Please see responses to the EEI's comments.	
Richard Vendetti - NextEra Energy - 5	
Answer	Yes
Document Name	
Comment	
Nextera agrees with modifications made in CIP-04-4, R2	
Likes 0	
Dislikes 0	
Response	
Thank you for your support.	
Ben Hammer - Western Area Power Administration - 1	
Answer	Yes
Document Name	
Comment	
Bright line criteria for proximate distance is appreciated, however, consider defining proximate distances in either feet or meters only.	
Likes 0	
Dislikes 0	
Response	

Thank you for your support and comments. Since NERC Standards apply to Canadian registered entities as well and they use meters, they do not want to make conversions. Same reason for the registered entities in the US. That's why both feet and meters are used.	
Amy Wilke - American Transmission Company, LLC - 1	
Answer	Yes
Document Name	
Comment	
ATC agrees with MRO NSRF comments.	
Likes 0	
Dislikes 0	
Response	
Thank you for your support. Please see response to the MRO NSRF comments.	
Thomas Breen - Berkshire Hathaway Energy - MidAmerican Energy Co. - 1	
Answer	Yes
Document Name	
Comment	
Support the comments from the MRO NSRF.	
Likes 0	
Dislikes 0	
Response	
Thank you for your support. Please see response to the MRO NSRF comments.	
Jessica Cordero - Unisource - Tucson Electric Power Co. - 1	
Answer	Yes
Document Name	

Comment	
TEPC agrees with EEI's comments.	
Likes 0	
Dislikes 0	
Response	
Thank you for your support. Please see response to the EEI's comments.	
Amy Key - Berkshire Hathaway Energy - MidAmerican Energy Co. - 3	
Answer	Yes
Document Name	
Comment	
MEC supports the comments of the MRO NSRF	
Likes 0	
Dislikes 0	
Response	
Thank you for your support. Please see response to the MRO NSRF comments.	
Anna Martinson - MRO - 1,2,3,4,5,6 - MRO, Group Name MRO Group	
Answer	Yes
Document Name	
Comment	
MRO NSRF thanks the DT for providing the bright line criteria for proximate distance, for further reducing that distance to 1500 ft. with U.S. government justification for that distance, and eliminating the problematic line-of-sight and common roadway considerations	

Likes 0	
Dislikes 0	
Response	
Thank you for your support and comments.	
Daniel Gacek - Exelon - 1, Group Name Exelon	
Answer	Yes
Document Name	
Comment	
Likes 0	
Dislikes 0	
Response	
Thank you for your support.	
Elizabeth Davis - Elizabeth Davis On Behalf of: Thomas Foster, PJM Interconnection, L.L.C., 2; - Elizabeth Davis	
Answer	Yes
Document Name	
Comment	
Likes 0	
Dislikes 0	
Response	
Thank you for your support.	
Chris Wagner - Santee Cooper - 1, Group Name Santee Cooper	
Answer	Yes

Document Name	
Comment	
Likes 0	
Dislikes 0	
Response	
Thank you for your support.	
Nick Leathers - Nick Leathers On Behalf of: David Jendras Sr, Ameren - Ameren Services, 3, 6, 1; - Nick Leathers	
Answer	Yes
Document Name	
Comment	
Likes 0	
Dislikes 0	
Response	
Thank you for your support.	
Robert Follini - Avista - Avista Corporation - 3	
Answer	Yes
Document Name	
Comment	
Likes 0	
Dislikes 0	
Response	

Thank you for your support.	
Mark Flanary - Midwest Reliability Organization - 10	
Answer	Yes
Document Name	
Comment	
Likes 0	
Dislikes 0	
Response	
Thank you for your support.	
Rachel Coyne - Texas Reliability Entity, Inc. - 10	
Answer	Yes
Document Name	
Comment	
Likes 0	
Dislikes 0	
Response	
Thank you for your support.	
Wendy Kalidass - U.S. Bureau of Reclamation - 5	
Answer	Yes
Document Name	
Comment	

Likes 0	
Dislikes 0	
Response	
Thank you for your support.	
Dave Krueger - SERC Reliability Corporation - 10	
Answer	Yes
Document Name	
Comment	
Likes 0	
Dislikes 0	
Response	
Thank you for your support.	
Phillip Martinez - Phillip Martinez On Behalf of: Richard Jackson, U.S. Bureau of Reclamation, 1, 5; - U.S. Bureau of Reclamation - 1 - WECC	
Answer	Yes
Document Name	
Comment	
Likes 0	
Dislikes 0	
Response	
Thank you for your support.	
Brian Millard - Tennessee Valley Authority - 1,3,5,6 - SERC, Group Name TVA RBB	
Answer	Yes

Document Name	
Comment	
Likes 0	
Dislikes 0	
Response	
Thank you for your support.	
Nikki Carson-Marquis - Nikki Carson-Marquis On Behalf of: Theresa Allard, Minnkota Power Cooperative Inc., 1; - Nikki Carson-Marquis	
Answer	Yes
Document Name	
Comment	
Likes 0	
Dislikes 0	
Response	
Thank you for your support.	
Tim Kelley - Tim Kelley On Behalf of: Charles Norton, Sacramento Municipal Utility District, 3, 6, 4, 1, 5; Foung Mua, Sacramento Municipal Utility District, 3, 6, 4, 1, 5; Kevin Smith, Balancing Authority of Northern California, 1; Nicole Looney, Sacramento Municipal Utility District, 3, 6, 4, 1, 5; Ryder Couch, Sacramento Municipal Utility District, 3, 6, 4, 1, 5; Wei Shao, Sacramento Municipal Utility District, 3, 6, 4, 1, 5; - Tim Kelley, Group Name SMUD and BANC	
Answer	Yes
Document Name	
Comment	
Likes 0	

Dislikes 0	
Response	
Thank you for your support.	
Darko Kovac, P.E. - Gainesville Regional Utilities - 1,3,5	
Answer	Yes
Document Name	
Comment	
Likes 0	
Dislikes 0	
Response	
Thank you for your support.	
James Keele - Entergy - 3	
Answer	Yes
Document Name	
Comment	
Likes 0	
Dislikes 0	
Response	
Thank you for your support.	
Stephen Stafford - Stephen Stafford On Behalf of: Greg Davis, Georgia Transmission Corporation, 1; - Stephen Stafford	
Answer	Yes
Document Name	

Comment	
Likes 0	
Dislikes 0	
Response	
Thank you for your support.	
Ronald Hoover - Bonneville Power Administration - 1,3,5,6 - WECC	
Answer	Yes
Document Name	
Comment	
Likes 0	
Dislikes 0	
Response	
Thank you for your support.	
Kevin Conway - Western Power Pool - 4	
Answer	Yes
Document Name	
Comment	
Likes 0	
Dislikes 0	
Response	
Thank you for your support.	

Sean Steffensen - IDACORP - Idaho Power Company - 1	
Answer	Yes
Document Name	
Comment	
Likes 0	
Dislikes 0	
Response	
Thank you for your support.	
Alison Nickells - NiSource - Northern Indiana Public Service Co. - 1	
Answer	Yes
Document Name	
Comment	
Likes 0	
Dislikes 0	
Response	
Thank you for your support.	
Lexi Dobrzysnki - Lexi Dobrzysnki On Behalf of: Angela Dockter, Alliant Energy Corporation Services, Inc., 4; - Lexi Dobrzysnki	
Answer	
Document Name	
Comment	
Alliant Energy mirrors the MRO NSRF group Comments.	

Likes 0	
Dislikes 0	
Response	
Thank you for your support. Please see responses to the MRO NSRF group Comments.	

3. Do you agree with the modifications made in CIP-014-4 with new Requirement R3 to address the issues identified in the SAR? If you do not agree, please provide your recommendation and, if appropriate, technical or procedural justification.	
Alison Nickells - NiSource - Northern Indiana Public Service Co. - 1	
Answer	No
Document Name	
Comment	
Steady-State analysis needs to be performed only for on-peak conditions.	
Likes 0	
Dislikes 0	
Response	
Thank you for your comment. The drafting team discussed the Off-Peak Load case and believes that Off-Peak is necessary for steady-state and dynamic simulations.	
Sean Steffensen - IDACORP - Idaho Power Company - 1	
Answer	No
Document Name	
Comment	
Idaho Power Company (IPC) recommends the Standard not prescribe a specific second case as a low-load scenario. Instead, IPC suggests the Standard require the second case reflect the system's worst-case conditions outside of the stresses applied in the System peak load case. This case could include scenarios that impose additional or independent stress on the system, such as varying seasonal conditions, path transfers, or different load levels. The specific nature of this case would depend on the system's topology, and system operators would be best positioned to determine what additional stresses should be considered. Additionally, IPC seeks further clarification regarding the term "proximate station" in the context of the requirement: "Faults at both the applicable and proximate Transmission station(s) or Transmission substation(s)." Specifically, IPC requests clarification on whether this requirement implies faults should be evaluated simultaneously across all proximate stations, or if each proximate station should be assessed individually in the same manner as the applicable station.	

Likes 0	
Dislikes 0	
Response	
Thank you for your comments. Please see revised Standard. Drafting team added “at least” for the load cases. Registered Entities can do more. Proximate stations is only required to perform simulations in Sub-Requirements 3.3.2 and new 3.5.	
Kevin Conway - Western Power Pool - 4	
Answer	No
Document Name	
Comment	
We believe that the loss of applicable transmission stations should extend to transmission substations identified in R2, where they may result in the physical loss of transmission substations in R1. If the association is intended by the Drafting Team, it is not apparent in how R3 is currently written.	
Likes 0	
Dislikes 0	
Response	
Thank you for your comments. Applicable stations refers to Attachment 1 stations only, not proximate stations.	
Ronald Hoover - Bonneville Power Administration - 1,3,5,6 - WECC	
Answer	No
Document Name	
Comment	
Requirement 3 creates confusion in situations where two or more substations in close proximity have different owners or joint ownership. It is unclear which entity should apply a fault, especially if the owner identified it under R1 and another entity identified it as proximate. It should be sufficient to apply a fault at the entity’s own applicable substation and then take the outage of both the	

applicable and proximate substations. There would be no need for duplicate fault studies, yet notifications to other entities are not required until R7 is reached. BPA believes Transmission Owners would have difficulties obtaining and validating information required for proximate Transmission stations or substations. BPA recommends adding language to facilitate coordination among varying entities to ensure data can be received and validated. R3.4 contains a reference to Part 3.3.2, but there is no such Part in the current redlines. This seems to result in the omission of proximate substations from R3.4, and it is unclear if this is an intentional omission.	
Likes 0	
Dislikes 0	
Response	
Thank you for your comments. Drafting team is aware that coordination is needed and necessary. Part 3.3.2 has been labled now.	
Stephen Stafford - Stephen Stafford On Behalf of: Greg Davis, Georgia Transmission Corporation, 1; - Stephen Stafford	
Answer	No
Document Name	
Comment	
Developing steady-state and dynamic simulation criteria is a planning function and should not be required of a Transmission Owner. The sub-requirements go further into addressing what a transmission planning study should include but applies this requirement incorrectly to the Transmission owner. The intent of R3 is more appropriately applicable to the TPL body of standards. CIP-014 should reference output from a study performed in accordance with a clearly defined TPL requirement for an extreme event involving the loss of an applicable Transmission station(s) or substation(s).	
Likes 0	
Dislikes 0	
Response	

Thank you for your comment. The SAR directs the drafting team to modify the Standard including performing assessment. Steady-state and dynamic simulations must be performed.	
Jessica Cordero - Unisource - Tucson Electric Power Co. - 1	
Answer	No
Document Name	
Comment	
TEPC agrees with EEI's comments.	
Likes 0	
Dislikes 0	
Response	
Thank you for your comment. Please see responses to the EEI’s comments.	
Diana Aguas - CenterPoint Energy Houston Electric, LLC - 1 - Texas RE	
Answer	No
Document Name	
Comment	
CEHE agrees with EEI's comments.	
Likes 0	
Dislikes 0	
Response	
Thank you for your comment. Please see responses to the EEI’s comments.	
Greg Sorenson - Greg Sorenson On Behalf of: Tremayne Brown, ReliabilityFirst , 10; - Greg Sorenson	
Answer	No
Document Name	

Comment	
3.1 - The second sentence of R3.1 appears to be deficient. There is no reasonable requirement for the thresholds (e.g., technical justifications). Further, consideration of the thresholds should only be one piece of the analysis, not all of it. R3.3.1 should also take into consideration the stability of the system before the thresholds are met. 3.4 - Consider clear indication of what kind of fault needs to be applied, i.e., a three phase to ground bolted fault or a single line to ground fault. 3.4.2 and 3.4.3 - Consider updating language that actual or more conservative clearing times shall be used and if not available, delayed (remote) clearing times are acceptable.	
Likes 0	
Dislikes 0	
Response	
Thank you for your comments and suggestions. The drafting team wants to leave the thresholds for the registered entities to define. Every region is different, as long as the thresholds can be justified, the Requirement would be made. The drafting team added “technically justified” in Part 3.1. There is no bright-line. Same reason for the type of fault needs to be studied. The actual clearing time is always available. The registered entities can use more conservative clearing time as an option.	
Andrew Smith - APS - Arizona Public Service Co. - 5	
Answer	No
Document Name	
Comment	
AZPS agrees with comments submitted by EEI on behalf of their members that there are concerns with the requirement to specify thresholds identifying unacceptable generation and load loss within an Interconnection in Requirement R3 Part 3.1 and their recommendation to remove that language.	
Likes 0	

Dislikes 0	
Response	
Thank you for your comment. Please see responses to the EEI's comments.	
Randy Peters - Manitoba Hydro - 1,3,5,6 - MRO	
Answer	No
Document Name	
Comment	
It's unclear whether the generation or load loss criteria will simply have specific MW thresholds for generation loss and load loss in the overall interconnected system, or define generation and load loss thresholds both inside and outside of a Planning Coordinator area (but within the overall Interconnection). Consideration could be given to adding a net loss criterion in cases where both generation and load are lost. When the loss of generation and load are of the same order there are typically minimal impacts on the Interconnection	
Likes 0	
Dislikes 0	
Response	
Thank you for your comments and suggestions. The drafting team wants to leave the thresholds for the registered entities to define. Every region is different, as long as the thresholds can be justified, the Requirement would be made. The drafting team added "technically justified" in Part 3.1.	
Bob Cardle - Bob Cardle On Behalf of: Marco Rios, Pacific Gas and Electric Company, 3, 1, 5; Sandra Ellis, Pacific Gas and Electric Company, 3, 1, 5; Tyler Brun, Pacific Gas and Electric Company, 3, 1, 5; - Bob Cardle	
Answer	No
Document Name	
Comment	

1) Quantifying “Unacceptable Loss” and “Conservative Clearing Time” (R3.1 &R3.4) - The phrases “unacceptable generation and load loss” in R3.1 and “actual or more conservative clearing time” in R3.4 are inherently subjective and open to regional interpretations. To promote uniform implementation, PGAE recommends that NERC establish quantitative default benchmarks for generation and load loss thresholds, and a clearing time margin. Including such reference values—while still allowing entities to justify alternative criteria based on system characteristics—will align CIP-014-4 with the measurable approach used in the NERC TPL standards and reduce the potential for inconsistent compliance findings across regions. 2) Clarification on R3.4- Assumption of Total Loss of Communication and Protection Systems – PGAE recommends clarifying the required assumptions for the simultaneous loss of “all communication and protection systems” in R3.4. Defining the expected modelling approach, preferably with an example one line and timing table, will allow entities to build studies that are both realistic and comparable, avoiding unnecessary burden while meeting the standard’s risk reduction objectives	
Likes 0	
Dislikes 0	
Response	
Thank you for your comments and suggestions. The drafting team wants to leave the thresholds for the registered entities to define. Every region is different, as long as the thresholds can be justified, the Requirement would be made. The drafting team added “technically justified” in Part 3.1. The drafting team made modification to Requirement R4, Part 3.4 and clarified that loss of communication does not apply to the proximate stations.	
Isidoro Behar - Long Island Power Authority - 1	
Answer	No
Document Name	
Comment	
Req 3.4 – This requirement states:	

"A specification that Fault simulations assume the loss of communication and Protection Systems at the applicable Transmission station(s) or Transmission substation(s) prior to or simultaneous with the Fault(s) studied under Requirement R3, Parts 3.3.1 and 3.3.2." It is not clear if the loss of communications and Protection Systems would apply to the proximate station (and thus an affected entity would have to make an assumption). We request clarification that the loss of communications and Protection Systems only applies to the **applicable stations** identified based on Req #1 (and not to the proximate stations identified based on Req #2). Question for clarification: If the loss of communications and Protection Systems does NOT apply to the proximate stations identified based on Req #2, then is it permissible to assume local high speed protection system clearing times for the fault **at the proximate station?**	
Likes 0	
Dislikes 0	
Response	
Thank you for your comments and suggestions. The drafting team wants to leave the thresholds for the registered entities to define. Every region is different, as long as the thresholds can be justified, the Requirement would be made. The drafting team added "technically justified" in Part 3.1. The drafting team made modification to Requirement R4, Part 3.4 and clarified that loss of communication does not apply to the proximate stations.	
Josh Schumacher - Black Hills Corporation - 6, Group Name Black Hills Corporation Segments 1, 3, 5, 6	
Answer	No
Document Name	
Comment	
Black Hills Corporation agrees with EEI's comments about seeking clarification around the use of numbering vs bullet points in Requirement R3 Part 3.3 and Part 3.4. Generally, bullet points can be considered "OR" requirement and numbered items are treated as "AND" requirements. There are also references to numbered items that don't exist in the current clean version of the document, for example Part 3.4 references Requirement R3 Parts 3.3.1 and 3.3.2, which do not exist in this version of the draft.	

Additionally, we agree with EEI's concerns about Requirements R3 Part 3.1 and how it might create scenarios where entities must rely on another party to provide the information necessary to establish and maintain the unacceptable thresholds for generation and load loss within an Interconnection. We agree with EEI's comments to remove some language from requirement R3 Part 3.1 and include it in the technical rationale on how to establish and maintain thresholds.	
Likes 0	
Dislikes 0	
Response	
Thank you for your comments and suggestions. The bullets have been replaced by numbers because it's an "and", not "or". The drafting team also added "technically justified" in Part 3.1 to clear the threshold concern.	
Jodi Yeary - AEP - 3	
Answer	No
Document Name	
Comment	
AEP is supportive of specifying that more than one scenario shall be studied but would like flexibility in choosing what factors are varied between scenarios. Also the draft currently mixes subrequirements with bullets which should be corrected: In the clean version of CIP-014-4 that is posted, there are bullet points under Requirement R3 Part 3.3 and 3.4, but Part 3.4 references Requirement R3 Parts 3.3.1 and 3.3.2, which do not exist in this draft. The Redline to Last Posted document includes a Requirement R3 Part 3.3.1 followed by a bullet point, but no Part 3.3.2. The Redline to Last Posted version also includes Requirement R4 Parts 3.4.1-3.4.3 instead of the bullet points that are in the clean version under 3.4.	
Likes 0	
Dislikes 0	
Response	
Thank you for your comments and suggestions. The bullets have been replaced by numbers because it's an "and", not "or".	

Brian Millard - Tennessee Valley Authority - 1,3,5,6 - SERC, Group Name TVA RBB	
Answer	No
Document Name	
Comment	

R3.2: TVA suggests reverting back to the prior draft of this language that is less prescriptive for what cases are more likely to contribute to instability, uncontrolled separation, or Cascading within an Interconnection.

TVA proposes revise R3.2 as follows: "Steady-state and dynamic simulations shall each be performed using:

(1) A peak-season and an off-peak season, or,

(2) Two different peak-seasons (e.g., summer and winter peak)"

Likes 0	
Dislikes 0	
Response	

Thank you for your comments. The drafting team added "at least" in Part 3.2. Drafting team believes that a System peak Load case and a System Off-Peak Load case are necessary. Registered entities may use additional options if they like.

Dave Krueger - SERC Reliability Corporation - 10	
Answer	No
Document Name	
Comment	

SERC appreciates the ongoing efforts to refine the CIP-014 Risk Assessment portion of the standard.

SERC believes that each Interconnection Planning Collaborative should establish the maximum generation and load loss thresholds for its respective Interconnection. Allowing each Transmission Owner to establish their own thresholds creates inconsistency for identifying which events cause instability, uncontrolled separation, or Cascading within an Interconnection.

SERC believes that the use of the single word 'Fault', does not provide clarity and consistency in the requirement. The fault type should be stated as a 3-phase Fault to align with how Extreme events are studied in TPL-001-5.1.	
Likes 0	
Dislikes 0	
Response	
Thank you for your comment. Drafting team agrees that 3-phase fault is generally most severe fault. However, there are situations other type of faults could be more severe.	
Steven Belle - Dominion - Dominion Virginia Power - 1	
Answer	No
Document Name	
Comment	
Dominion supports EEI's comments.	
Likes 0	
Dislikes 0	
Response	
Thank you for your comments. Please see responses to the EEI's comments.	
Alan Kloster - Alan Kloster On Behalf of: Jeremy Harris, Evergy, 3, 5, 1, 6; Kevin Frick, Evergy, 3, 5, 1, 6; Marcus Moor, Evergy, 3, 5, 1, 6; Tiffany Lake, Evergy, 3, 5, 1, 6; - Alan Kloster	
Answer	No
Document Name	
Comment	
Evergy supports and incorporates by reference the comments of the Edison Electric Institute and MRO NSRF for question #3.	

Likes 0	
Dislikes 0	
Response	
Thank you for your comments. Please see responses to the Edison Electric Institute and MRO NSRF's comments.	
Mark Flanary - Midwest Reliability Organization - 10	
Answer	No
Document Name	
Comment	
For R3.3, the use of the term "Fault" opens the door to the usage of less severe faults. We recommend changing "Fault" to "a Fault that will cause the most severe consequences at that substation" to ensure the most serious scenario is studied. The Standard need not specify what fault is to be used in the study, but the Entity would identify what the most serious Fault is and study that.	
Likes 0	
Dislikes 0	
Response	
Thank you for your comment. Drafting team agrees that 3-phase fault is generally most severe fault. However, there are situations other type of faults could be more severe.	
Jamison Cawley - Nebraska Public Power District - 1	
Answer	No
Document Name	
Comment	
There appears to be no technical basis to support the inclusion of prior outage scenarios involving communication systems and the ability to assume simultaneous loss of the comm system with the disturbance is also an option here which introduces subjectivity to the process. Including prior outage scenarios in the Risk Assessment (RA) could include prior outages of generators, lines, transformers and other	

substation equipment which adds further ambiguity to the RA process. The requirement to use delayed clearing times cannot be technically justified for certain protection schemes (DCUB) and the TO should have the ability to use their extensive experience in this area versus a requirement to assume delayed clearing times.	
Likes 1	Nebraska Public Power District, 5, Bender Ronald
Dislikes 0	
Response	
Thank you for your comments. Drafting team believes that the studies listed in Requirement R3 are all necessary for reliability. Some modifications are made in R3 for clarification.	
Nick Leathers - Nick Leathers On Behalf of: David Jendras Sr, Ameren - Ameren Services, 3, 6, 1; - Nick Leathers	
Answer	No
Document Name	
Comment	
Ameren would like more clarity around R3.3.1 and the bulleted item beneath it. As written, it is not clear whether both items are required or if there is a choice of which item to complete. Requiring peak and off-peak cases will double the number of simulations that need to be performed.	
Likes 0	
Dislikes 0	
Response	
Thank you for your comment. All items listed under Requirement R3, Part 3.3 are required.	
Selene Willis - Edison International - Southern California Edison Company - 5	
Answer	No
Document Name	
Comment	

"Please see EEI Comments"	
Likes 0	
Dislikes 0	
Response	
Thank you for your comment. Please see responses to the EEI's comments.	
Chris Wagner - Santee Cooper - 1, Group Name Santee Cooper	
Answer	No
Document Name	
Comment	
Defining a fixed MW value for generation or load loss should not be required if the assessment does not conclude that it would risk instability, uncontrolled separation or Cascading. This could result in a scenario where costly additional security measures are shifted to the entity and its customers for an event that crossed the MW threshold but did not cause instability or Cascading in the assessment.	
Likes 0	
Dislikes 0	
Response	
Thank you for your comments.	
Hillary Creurer - Allete - Minnesota Power, Inc. - 1	
Answer	No
Document Name	
Comment	
Minnesota Power supports EEI's comments.	
Likes 0	

Dislikes 0	
Response	
Thank you for your comment. Please see responses to the EEI's comments.	
Richard Vendetti - NextEra Energy - 5	
Answer	No
Document Name	
Comment	
Nextera supports comments submitted by EEI: EEI appreciates the drafting team's revisions to Requirement R3, however, Requirement R3, Part 3.1 still includes load loss and generation loss which is not required by the SAR. EEI proposes the following language: "Technically supported thresholds **methodology** and rationale for determining the amount of acceptable load loss, the amount of acceptable generation loss, post event response, and any additional considerations recognized as resulting in instability, uncontrolled separation, or Cascading within an interconnection **used in the analysis to identify System instability for conditions including Cascading, voltage instability, or uncontrolled islanding**. The technical rationale shall include:" Further, Nextera proposes an addition in R3: Perform CIP-014 assessment on both individual and group of Transmission station and substation that are in the proximity. Identify whether individual or Proximity Transmission station and Transmission substation are not meeting the Risk Assessment methodology documented in R3.	
Likes 0	
Dislikes 0	
Response	
Thank you for your comment and recommendation. Please see responses to the EEI's comments.	

Kristine Martz - Edison Electric Institute - NA - Not Applicable - NA - Not Applicable	
Answer	No
Document Name	
Comment	

EEI seeks clarification on the drafting team's intention for Requirement R3 Part 3.3 and Part 3.4 sub-requirements. In the clean version of CIP-014-4 that is posted, there are bullet points under Requirement R3 Part 3.3 and 3.4, but Part 3.4 references Requirement R3 Parts 3.3.1 and 3.3.2 which do not exist in this draft. The Redline to Last Posted document includes a Requirement R3 Part 3.3.1 followed by a bullet point, but no Part 3.3.2. The Redline to Last Posted version also includes Requirement R4 Parts 3.4.1-3.4.3 instead of the bullet points that are in the clean version under 3.4. The numbers vs. bullets are important to understand because generally, numbered items are treated as "and" requirements, and bulleted lists can be interpreted as "or" requirements.

Additionally, EEI is concerned about the requirement to specify thresholds identifying unacceptable generation and load loss within an Interconnection in Requirement R3 Part 3.1. In some scenarios entities rely on another party to provide the information necessary to establish and maintain these thresholds. EEI suggests striking the sentence "The criteria shall include, at a minimum, thresholds identifying unacceptable generation and load loss within an Interconnection" from Requirement R3 Part 3.1 and including it in the technical rationale with details on how to establish and maintain the thresholds.

Likes 0	
Dislikes 0	

Response

Thank you for your comment. The numbering has been added to the sub-parts of R3. The drafting team also added "technically justified" in Part 3.1 for the concern raised.

Joseph Scott - Lower Colorado River Authority - 5	
Answer	No
Document Name	
Comment	

We do not agree with the changes to R3 as currently written. If a proximate substation falls outside our footprint , we may not have access to the necessary data to perform a proper risk assessment or to evaluate simulation results. It may be more appropriate for this type of assessment to be handled at the regional level.	
Likes 0	
Dislikes 0	
Response	
Thank you for your comment. The SAR directs the drafting team to include adjacent Transmission stations or Transmission substations of differing ownership. Coordination has to be made.	
Gail Elliott - Gail Elliott On Behalf of: Michael Moltane, International Transmission Company Holdings Corporation, 1; - Gail Elliott	
Answer	No
Document Name	
Comment	
ITC seeks clarification on the drafting team's intention for Requirement R3 Part 3.3 and Part 3.4 sub-requirements. In the clean version of CIP-014-4 that is posted, there are bullet points under Requirement R3 Part 3.3 and 3.4, but Part 3.4 references Requirement R3 Parts 3.3.1 and 3.3.2 which do not exist in this draft. The Redline to Last Posted document includes a Requirement R3 Part 3.3.1 followed by a bullet point, but no Part 3.3.2. The Redline to Last Posted version also includes Requirement R4 Parts 3.4.1-3.4.3 instead of the bullet points that are in the clean version under 3.4. The numbers vs. bullets are important to understand because generally, numbered items are treated as "and" requirements, and bulleted lists can be interpreted as "or" requirements.	
Likes 0	
Dislikes 0	
Response	
Thank you for your comment. The numbering has been added to the sub-parts of R3.	
Wesley Maurer - Lower Colorado River Authority - 1 - Texas RE	
Answer	No

Document Name	
Comment	
We do not agree with the changes to R3 as currently written. If a proximate substation falls outside our footprint , we may not have access to the necessary data to perform a proper risk assessment or to evaluate simulation results. It may be more appropriate for this type of assessment to be handled at the regional level.	
Likes 0	
Dislikes 0	
Response	
Thank you for your comment. The SAR directs the drafting team to include adjacent Transmission stations or Transmission substations of differing ownership. Coordination has to be made.	
Dan Perry - TXNM Energy - 1,3,5 - WECC,Texas RE	
Answer	No
Document Name	
Comment	
TXNM Energy agrees with EEI comments and adds the following: Requirement to run faults at multiple substations is challenging from a software (GE PSLF) perspective and the technical rationale for performing faults at multiple elements does not seem to have basis. Drafting Team should include more information for how this should be accomplished in the Technical Rationale.	
Likes 0	
Dislikes 0	
Response	
Thank you for your comment. Please see the response to the EEI's comments. The Requirement does not require to run faults at multiple substations. It's "A" typical fault.	

Kelley Sargent - Puget Sound Energy, Inc. - 3	
Answer	No
Document Name	
Comment	

3.1 Thresholds for Unacceptable load or generation loss within an interconnection: It will be helpful if WECC provides thresholds for unacceptable load loss and generation loss that may impact the interconnection. Lack of specific criteria from WECC will lead to inconsistency in CIP-14 assessment methodology among members.

3.3 It will be helpful if standard can clarify if the fault is 3 Phase or single phase.

3.4.2 & 3.4.3 Clearing times: It is not clear if Delayed (remote) clearing times or Actual (more conservative) clearing times shall be used. Does the standard allow both? The technical rationale document for CIP 14-4 (pg. 4) seems to indicate that actual or more conservative clearing times are required. If so, 3.4.2 should be removed.

Likes 0	
Dislikes 0	
Response	

Thank you for your comments. A coordination is assumed with Regional Enities or RCs. Some public documents should have the thresholds listed for different regions.

The drafting team does not want to specify the type of faults, because some faults are more severe than others depending on the scenario.

Both delayed (remote) clearing times and Actual (more conservative) clearing times should be used for applicable stations from R1, not for R2 proximate stations.

Elizabeth Davis - Elizabeth Davis On Behalf of: Thomas Foster, PJM Interconnection, L.L.C., 2; - Elizabeth Davis	
Answer	No
Document Name	

Comment	
PJM requests language indicating all voltage levels be included in R3 or R3 subrequirements (where the Drafting Team finds the best fit).	
Likes 0	
Dislikes 0	
Response	
Thank you for your comment. Most of the sub-Requirements apply to the list in Attachment 1. Only Part 3.3.2 and 3.5 apply to BES.	
Robert Blackney - Edison International - Southern California Edison Company - 1	
Answer	No
Document Name	
Comment	
See comments submitted by Edison Electric Institute.	
Likes 0	
Dislikes 0	
Response	
Thank you for your comment. Please see responses to the EEI's comments.	
Emma Halilovic - Hydro One Networks, Inc. - 1	
Answer	No
Document Name	2023-06 Draft_3_Comment_Form.docx
Comment	
See attached for recommendations and rationales. R3 Each Transmission Owner who has identified stations or substations in accordance with R1, shall have a documented risk assessment methodology that further refines the R1 list to by utilizing electrical performance testing for evaluation of system performance due to a physical attack. A refined list of identified	

stations or substations will result where system performance does not meet criteria. The methodology shall include the following: [Violation Risk Factor: High; Time-Horizon: Long-term Planning]

3.1. Documented criteria for assessing system instability, uncontrolled separation, or Cascading within an Interconnection.

3.2. An electrical performance test employing steady-state and/or dynamic simulations performed under System Peak and/or System Light load conditions that are more likely to contribute to instability, uncontrolled separation, or Cascading within an Interconnection.

3.3. A test that involves an electrical fault at the station or substation whereby all elements connected at voltage levels 200 kV and above are removed from service.

3.4 The system performance result of this electrical fault (R3.3) to be compared against criteria established in R3.1 for any case or simulations employed in R3.2.

Make an Attachment 2: Sample Procedure for Electrical Testing: e.g.

- If dynamic simulations show acceptable system response but additional Elements trip during the dynamic simulation of an event, then additional steady-state analysis including any tripped Elements from the dynamic simulations shall be conducted.
- A specification that Fault simulations that assume the loss of communication and Protection System for the station or substation under test
- Removal of all Elements that Protection Systems and other controls are expected to automatically disconnect for each event.
- Delayed (remote) clearing times shall be used unless otherwise technically substantiated.

- Actual or more conservative estimates of clearing times.
- The simulations shall include the removal of all Elements that Protection Systems and other controls are expected to automatically disconnect for each event.

Likes 0	
Dislikes 0	

Response
Thank you for your comments. Please see some modifications made to Requirement R3.
Jennie Wike - Jennie Wike On Behalf of: John Merrell, Tacoma Public Utilities (Tacoma, WA), 1, 4, 5, 6, 3; - Jennie Wike, Group Name Tacoma Power

Answer	No
Document Name	

Comment

Tacoma Power is concerned with using bullets for the sub-items in R3.3. Instead of using bullets, these sub-items should be numbered as 3.3.1 and 3.3.2 to ensure that both are required. Bullets are used to indicate an "or" relationship. Additionally, the language in the lead-in statement of R3 should be revised to include proximate stations and substations to ensure it's clear that both should be considered.

Proposed revision to R3:

"R3. Each Transmission Owner shall have a documented risk assessment methodology for evaluating the loss of each applicable Transmission station or Transmission substation identified in Requirement R1, **and any associated proximate Transmissions stations or Transmission substations identified in Requirement R2**. The methodology shall include, at a minimum, the following:

3.3. A specification for Fault simulations, including:

3.3.1. For each applicable Transmission station or Transmission substation listed in accordance with Requirement R1, a Fault at the applicable Transmission station or Transmission substation. **3.3.2.** For each Transmission station or Transmission substation determined in accordance with Requirement R2 as being in proximity to an applicable Transmission station or Transmission substation, Faults at both the applicable and proximate Transmission station(s) or Transmission substation(s).” Tacoma Power recommends swapping the order of R3 and R4. The Requirement R4 actions should occur prior to documenting the methodology. Also, there’s an inconsistency between the CIP-014-4 clean version and redline files. The redline to last approved file shows 3.3.1 and 3.3.2 instead of bullets. The redline to last posted file shows 3.3.1 and a bullet. The clean version has only bullets under R3.3.	
Likes 0	
Dislikes 0	
Response	
Thank you for your comments. The bullets are replaced by the numbers now. The drafting team did intend to have the simulations to include them all.	
Melanie Wong - Seminole Electric Cooperative, Inc. - 5	
Answer	No
Document Name	
Comment	
Likes 0	
Dislikes 0	
Response	
Thank you for your feedback.	
Anna Martinson - MRO - 1,2,3,4,5,6 - MRO, Group Name MRO Group	

Answer	Yes
Document Name	
Comment	
MRO NSRF recommends reinstating the option to use more conservative estimates vs. actual clearing times in the last bullet of R3.4. If an Entity wishes to use conservative estimates of clearing times rather than calculate every actual clearing time, an auditor can sample and ask for justification. If the actual clearing time is found to be longer than the estimate the auditor would ask for the study to be re-run with the actual clearing time, which may or may not change whether a Transmission station or substation is identified. Registered Entities should have the latitude to use engineering judgement where they think it is warranted. More importantly, if a conservative estimate of clearing times results in the study identifying a Transmission station or substation, there is no need to re-run the study with actual clearing times. This could save system protection personnel significant time and effort calculating unneeded actual clearing times	
Likes 0	
Dislikes 0	
Response	
Thank you for your comments. The drafting team wants to give the industry options to use either actual or more conservative clearing time, not to force the industry to use more conservative clearing time only.	
Amy Key - Berkshire Hathaway Energy - MidAmerican Energy Co. - 3	
Answer	Yes
Document Name	
Comment	
MEC supports the comments of the MRO NSRF	
Likes 0	
Dislikes 0	
Response	
Thank you for your support. Please see response to the MRO NSRF's comments.	

Thomas Breen - Berkshire Hathaway Energy - MidAmerican Energy Co. - 1	
Answer	Yes
Document Name	
Comment	
Support the comments of the MRO NSRF.	
Likes 0	
Dislikes 0	
Response	
Thank you for your support. Please see response to the MRO NSRF's comments	
Amy Wilke - American Transmission Company, LLC - 1	
Answer	Yes
Document Name	
Comment	
ATC agrees with MRO NSRF comments.	
Likes 0	
Dislikes 0	
Response	
Thank you for your support. Please see response to the MRO NSRF's comments	
Mark Garza - FirstEnergy - FirstEnergy Corporation - 4, Group Name FE Voter	
Answer	Yes
Document Name	
Comment	

FirstEnergy agrees with the modifications made to Requirement R3	
Likes 0	
Dislikes 0	
Response	
Thank you for your support.	
Misty Carneal - Duke Energy - 1,3,5,6 - Texas RE,SERC,RF	
Answer	Yes
Document Name	
Comment	
Duke Energy agrees with the modifications to R3.	
Likes 0	
Dislikes 0	
Response	
Thank you for your support.	
Matt Carden - Southern Company - Southern Company Services, Inc. - 1	
Answer	Yes
Document Name	
Comment	
Southern Company agrees with the modifications made in CIP-014-4 Requirement R3. For clarity, we recommend the language in the second bullet point for Requirement R3.4 to state "**either** prior to or simultaneous with the Fault(s)…"	
Likes 0	

Dislikes 0	
Response	
Thank you for your support. Pease see revised Standard to reflect this change.	
Timothy Singh - Timothy Singh On Behalf of: Israel Perez, Salt River Project, 3, 6, 5, 1; Laura Somak, Salt River Project, 3, 6, 5, 1; Mathew Weber, Salt River Project, 3, 6, 5, 1; Matthew Jaramilla, Salt River Project, 3, 6, 5, 1; - Timothy Singh	
Answer	Yes
Document Name	
Comment	
SRP agrees with Requirment R3 by introducing a structured methodology for risk assessment.	
Likes 0	
Dislikes 0	
Response	
Thank you for your support.	
Ben Hammer - Western Area Power Administration - 1	
Answer	Yes
Document Name	
Comment	
There is a typo in Requirement R3 bullet points being used in R3.4 rather than R3.3.1 and R3.3.2 (redline and clean versions look different. Also, recommend reinstating the option to use more conservative estimates vs. actual clearing times in the last bullet of R3.4. If an Entity wishes to use conservative estimates of clearing times rather than calculate every actual clearing time, an auditor can sample and ask for justification. If the actual clearing time is found to be longer than the estimate the auditor would ask for the study to be re-run with the actual clearing time, which may or may not change whether a Transmission station or substation is identified. Registered Entities should have the latitude to use engineering judgement where they think it is warranted. More importantly, if a conservative estimate of clearing	

times results in the study identifying a Transmission station or substation, there is no need to re-run the study with actual clearing times. This could save system protection personnel significant time and effort calculating unneeded actual clearing times.	
Likes 0	
Dislikes 0	
Response	
Thank you for your comments. The bullets are replaced with numbers. You are correct. That is the idea for the entities to either use actual or conservative clearing times. If a conservative estimate of clearing times results in the study identifying a Transmission station or substation, there is no need to re-run the study with actual clearing times.	
Carver Powers - Utility Services, Inc. - 4	
Answer	Yes
Document Name	
Comment	
Was the intent to have the responsible entity establish their own “unacceptable load loss”? In other cases, it is up to the BA, RC, or RP to determine the Facility’s unacceptable load loss.	
Likes 0	
Dislikes 0	
Response	
Thank you for your comments. You are correct. The intent was to have the responsible entity establish their own “unacceptable load loss”. There is a change in the latest draft. Please see the Technical Rationale document for guidance. An entity may coordinate with their respect BA, RC, or RP.	
Lucinda Bradshaw - Lucinda Bradshaw On Behalf of: Byron Booker, Oncor Electric Delivery, 1; - Lucinda Bradshaw	
Answer	Yes
Document Name	
Comment	

N/A	
Likes 0	
Dislikes 0	
Response	
Thank you for your support.	
Monika Montez - California ISO - 2 - WECC, Group Name ISO/RTO Council Standards Review Committee (SRC)	
Answer	Yes
Document Name	
Comment	
The ISO/RTO Council (IRC) Standards Review Committee (SRC) agrees that the SAR provides clarity.	
Likes 0	
Dislikes 0	
Response	
Thank you for your support.	
Kennedy Meier - Electric Reliability Council of Texas, Inc. - 2	
Answer	Yes
Document Name	
Comment	
ERCOT joins the comments submitted by the IRC SRC and adopts them as its own.	
Likes 0	
Dislikes 0	

Response	
Thank you for your comments and support. Please see responses to the IRC SRC's comments.	
Daniel Gacek - Exelon - 1, Group Name Exelon	
Answer	Yes
Document Name	
Comment	
While Exelon agrees the modifications in the new Requirement R3 address the issues identified in the SAR, we do suggest the following enhancements. The sub-requirement R3.1 minimum requirement for thresholds identifying unacceptable generation and load loss within an Interconnection would benefit from additional clarification and guidance. For example, perhaps data regarding frequency response to loss of generation and loss of load could act as guidance for entities to establish these thresholds. To reduce the burden on smaller TOs of developing an R3 methodology and performing the R5 planning studies, consider providing an option for entities to use the list of transmission stations or substations obtained from the Attachment 1 analysis, as the input to R7 for primary control center determination, and as the input to R8 to begin the physical attack evaluation. Attachment 1 would therefore be an option as the R3 methodology that would then be applied in R5. R4 would still be required. The R6 third party review would be limited to a review of the Attachment 1 analysis.	
Likes 0	
Dislikes 0	
Response	
Thank you for your comments and support. Please see revised Requirement 3, Part 3.1 and Technical Rationale for guidance. Requirement R6 is out of scope for this project.	
Jeffrey Streifling - NB Power Corporation - 1	
Answer	Yes
Document Name	
Comment	

Likes 0	
Dislikes 0	
Response	
Thank you for your support.	
Tamarra Hardie - Public Utility District No. 1 of Chelan County - 6, Group Name CHPD	
Answer	Yes
Document Name	
Comment	
Likes 0	
Dislikes 0	
Response	
Thank you for your support.	
James Keele - Entergy - 3	
Answer	Yes
Document Name	
Comment	
Likes 0	
Dislikes 0	
Response	
Thank you for your support.	
Darko Kovac, P.E. - Gainesville Regional Utilities - 1,3,5	

Answer	Yes
Document Name	
Comment	
Likes 0	
Dislikes 0	
Response	
Thank you for your support.	
Tim Kelley - Tim Kelley On Behalf of: Charles Norton, Sacramento Municipal Utility District, 3, 6, 4, 1, 5; Foung Mua, Sacramento Municipal Utility District, 3, 6, 4, 1, 5; Kevin Smith, Balancing Authority of Northern California, 1; Nicole Looney, Sacramento Municipal Utility District, 3, 6, 4, 1, 5; Ryder Couch, Sacramento Municipal Utility District, 3, 6, 4, 1, 5; Wei Shao, Sacramento Municipal Utility District, 3, 6, 4, 1, 5; - Tim Kelley, Group Name SMUD and BANC	
Answer	Yes
Document Name	
Comment	
Likes 0	
Dislikes 0	
Response	
Thank you for your support.	
Donna Wood - Tri-State G and T Association, Inc. - 1	
Answer	Yes
Document Name	
Comment	

Likes 0	
Dislikes 0	
Response	
Thank you for your support.	
David Melanson - NB Power Corporation - New Brunswick Power Transmission Corporation - 5	
Answer	Yes
Document Name	
Comment	
Likes 0	
Dislikes 0	
Response	
Thank you for your support.	
Nikki Carson-Marquis - Nikki Carson-Marquis On Behalf of: Theresa Allard, Minnkota Power Cooperative Inc., 1; - Nikki Carson-Marquis	
Answer	Yes
Document Name	
Comment	
Likes 0	
Dislikes 0	
Response	
Thank you for your support.	
Phillip Martinez - Phillip Martinez On Behalf of: Richard Jackson, U.S. Bureau of Reclamation, 1, 5; - U.S. Bureau of Reclamation - 1 - WECC	
Answer	Yes

Document Name	
Comment	
Likes 0	
Dislikes 0	
Response	
Thank you for your support.	
Dermot Smyth - Con Ed - Consolidated Edison Co. of New York - 1, Group Name Con Edison	
Answer	Yes
Document Name	
Comment	
Likes 0	
Dislikes 0	
Response	
Thank you for your support.	
Jason Chandler - Con Ed - Consolidated Edison Co. of New York - 6	
Answer	Yes
Document Name	
Comment	
Likes 0	
Dislikes 0	
Response	

Thank you for your support.	
Wendy Kalidass - U.S. Bureau of Reclamation - 5	
Answer	Yes
Document Name	
Comment	
Likes 0	
Dislikes 0	
Response	
Thank you for your support.	
Chantal Mazza - Chantal Mazza On Behalf of: Junji Yamaguchi, Hydro-Quebec (HQ), 1, 5; Nicolas Turcotte, Hydro-Quebec (HQ), 1, 5; - Chantal Mazza	
Answer	Yes
Document Name	
Comment	
Likes 0	
Dislikes 0	
Response	
Thank you for your support.	
Lincoln Burton - Con Ed - Consolidated Edison Co. of New York - 3	
Answer	Yes
Document Name	
Comment	

Likes 0	
Dislikes 0	
Response	
Thank you for your support.	
Zahid Qayyum - New York Power Authority - 5	
Answer	Yes
Document Name	
Comment	
Likes 0	
Dislikes 0	
Response	
Thank you for your support.	
Michelle Pagano - Con Ed - Consolidated Edison Co. of New York - 5	
Answer	Yes
Document Name	
Comment	
Likes 0	
Dislikes 0	
Response	
Thank you for your support.	
Rebika Yitna - Rebika Yitna On Behalf of: Roger Brand, MEAG Power, 3, 1; - Rebika Yitna	
Answer	Yes

Document Name	
Comment	
Likes 0	
Dislikes 0	
Response	
Thank you for your support.	
Ruida Shu - Northeast Power Coordinating Council - 10, Group Name NPCC RSC	
Answer	Yes
Document Name	
Comment	
Likes 0	
Dislikes 0	
Response	
Thank you for your support.	
Robert Follini - Avista - Avista Corporation - 3	
Answer	Yes
Document Name	
Comment	
Likes 0	
Dislikes 0	
Response	

Thank you for your support.	
Lexi Dobrzysnki - Lexi Dobrzysnki On Behalf of: Angela Dockter, Alliant Energy Corporation Services, Inc., 4; - Lexi Dobrzysnki	
Answer	
Document Name	
Comment	
Alliant Energy mirrors the MRO NSRF group Comments.	
Likes 0	
Dislikes 0	
Response	
Thank you for your support.	
Rachel Coyne - Texas Reliability Entity, Inc. - 10	
Answer	
Document Name	
Comment	
Texas RE is still concerned the proposed Requirement Part 3.3 language does not specify the type of fault conditions (line-to-ground fault or three-phase fault) criteria that needs to be studied. If the language will not be added to the requirement, Texas RE requests the Technical Rationale specify whether single-line-to-ground faults or three-phase-to-ground faults are to be included in the simulations, to ensure consistency and clarity in fault analysis across entities.	
Likes 0	
Dislikes 0	
Response	
Thank you for your comments. Drafting team believes that 3-phase fault is generally most severe fault. However, there are situations other type of faults could be more severe. The drafting team can add more language on simulations in the Technical Rationale document.	

4. Do you agree with the modifications made in CIP-014-4 with new Requirement R4 to address the issues identified in the SAR? If you do not agree, please provide your recommendation and, if appropriate, technical or procedural justification.	
Robert Blackney - Edison International - Southern California Edison Company - 1	
Answer	No
Document Name	
Comment	
See comments submitted by Edison Electric Institute.	
Likes 0	
Dislikes 0	
Response	
Thank you for your comments. Please see responses to the EEI's comment.	
Lucinda Bradshaw - Lucinda Bradshaw On Behalf of: Byron Booker, Oncor Electric Delivery, 1; - Lucinda Bradshaw	
Answer	No
Document Name	
Comment	
Oncor appreciates the SDT's response to Oncor's previous comment in the last draft, which affirmed that each TO may prepare its own risk assessment of the subject station and may use its own methodology. Oncor also appreciates the SDT's clarification that, in the event agreement cannot be reached, each TO is able to justify its results using its own supporting evidence. To ensure this intent of the SDT is clearly conveyed, Oncor believes it would be beneficial to include this clarification directly in Requirement R4 language. Accordingly, Oncor recommends the following addition to Requirement R4: Each Transmission Owner with applicable Transmission station(s) and Transmission substations(s) identified in Requirement R1 containing Bulk Electric System (BES) Elements owned by multiple Transmission Owners shall coordinate with each appropriate Transmission Owner(s)	

to determine and document their individual and joint responsibilities for documenting a risk assessment methodology under Requirement R3 and for performing any required risk assessments per Requirement R5. ***In the event that coordination of individual and joint responsibilities cannot be achieved for documenting a risk assessment methodology under Requirement R3 and for performing any required risk assessments per Requirement R5, each Transmission Owner shall document and justify its own risk assessment using its own methodology and evidence.***	
Likes 0	
Dislikes 0	
Response	
Thank you for your comments and suggestion. Please see revised Requirement R4. The new laugauage should clearly explain the responsibilities for jointly owned stations.	
Gail Elliott - Gail Elliott On Behalf of: Michael Moltane, International Transmission Company Holdings Corporation, 1; - Gail Elliott	
Answer	No
Document Name	
Comment	
ITC suggests either the removal of or the following revision to Requirement R4: R4. Each Transmission Owner with applicable Transmission station(s) and Transmission substation(s) identified in Requirement R1 containing Bulk Electric System (BES) Elements **greater than 200 kV or identified as part of an IROL or essential to meeting an NPIR** owned by multiple Transmission Owners shall coordinate with each appropriate Transmission Owner(s) to determine and document their individual and joint responsibilities for documenting a risk assessment methodology under Requirement R3 and for performing any required risk assessments per Requirement R5. R4 is administrative requiring documentation for all joint stations. Many joint stations have existed for decades where the two entities have an understanding of who is responsible for what parts of compliance. When documentation is being required, many entities legal groups will feel a need to be involved making this both time consuming and costly.	
Likes 0	
Dislikes 0	

Response	
Thank you for your comments. Please see revised Requirement R4. Removing “BES” should clear the confusion with applicability. Requirement R4 is part of the SAR work scope (#5).	
Kristine Martz - Edison Electric Institute - NA - Not Applicable - NA - Not Applicable	
Answer	No
Document Name	
Comment	
EEI suggests the following revision to Requirement R4: R4. Each Transmission Owner with applicable Transmission station(s) and Transmission substation(s) identified in Requirement R1 containing Bulk Electric System (BES) Elements **greater than 200 kV or identified as part of an IROL or essential to meeting an NPIR** owned by multiple Transmission Owners shall coordinate with each appropriate Transmission Owner(s) to determine and document their individual and joint responsibilities for documenting a risk assessment methodology under Requirement R3 and for performing any required risk assessments per Requirement R5. EEI also asks the drafting team to consider adding content to the Technical Rationale describing how an entity can prove that they do not have anyone to coordinate with because there are no jointly owned Transmission station(s) or Transmission substation(s).	
Likes 0	
Dislikes 0	
Response	
Thank you for your comments. Please see revised Requirement R4. Removing “BES” should clear the confusion with applicability. Requirement R4 is part of the SAR work scope (#5).	
Hillary Creurer - Allete - Minnesota Power, Inc. - 1	
Answer	No
Document Name	
Comment	

Minnesota Power supports EEI’s comments.	
Likes 0	
Dislikes 0	
Response	
Thank you for your comments. Please see responses to the EEI’s comments.	
Selene Willis - Edison International - Southern California Edison Company - 5	
Answer	No
Document Name	
Comment	
"Please see EEI Comments"	
Likes 0	
Dislikes 0	
Response	
Thank you for your comments. Please see responses to the EEI’s comments.	
Ruida Shu - Northeast Power Coordinating Council - 10, Group Name NPCC RSC	
Answer	No
Document Name	
Comment	
Based on the Technical Rationale, the inclusion of “BES Elements” appears to reference the addition of jointly owned Transmission stations and Transmission substations in the Applicability section. However, introducing the term “BES Elements” creates confusion by shifting the focus to individual elements rather than the applicable Transmission stations and substations.	
Likes 0	

Dislikes 0	
Response	
Thank you for your comments. Please see revised Requirement R4. Removing “BES” should clear the confusion with applicability.	
Zahid Qayyum - New York Power Authority - 5	
Answer	No
Document Name	
Comment	
NYPA supports NPCC RSC comments.	
Likes 0	
Dislikes 0	
Response	
Please see the responses to the NPCC’s comments.	
Jamison Cawley - Nebraska Public Power District - 1	
Answer	No
Document Name	
Comment	
The CIP-014 RA should be limited to the substation equipment that the TO owns. There are different study assumptions and criteria available to different TOs and to attempt to coordinate this on this new 36-month timeframe will only require further resources from multiple TOs who may not be willing to share CEII information in an open forum.	
Likes 1	Nebraska Public Power District, 5, Bender Ronald
Dislikes 0	
Response	
Thank you for your comments. Requirement R4 is part of the SAR work scope (#5).	

Alan Kloster - Alan Kloster On Behalf of: Jeremy Harris, Evergy, 3, 5, 1, 6; Kevin Frick, Evergy, 3, 5, 1, 6; Marcus Moor, Evergy, 3, 5, 1, 6; Tiffany Lake, Evergy, 3, 5, 1, 6; - Alan Kloster	
Answer	No
Document Name	
Comment	
Evergy supports and incorporates by reference the comments of the Edison Electric Institute and MRO NSRF for question #4.	
Likes 0	
Dislikes 0	
Response	
Thank you for your comments. Please see responses to the Edison Electric Institute and MRO NSRF's comments.	
Chantal Mazza - Chantal Mazza On Behalf of: Junji Yamaguchi, Hydro-Quebec (HQ), 1, 5; Nicolas Turcotte, Hydro-Quebec (HQ), 1, 5; - Chantal Mazza	
Answer	No
Document Name	
Comment	
Based on the Technical Rationale, the inclusion of "BES Elements" appears to reference the addition of jointly owned Transmission stations and Transmission substations in the Applicability section. However, introducing the term "BES Elements" creates confusion by shifting the focus to individual elements rather than the applicable Transmission stations and substations.	
Likes 0	
Dislikes 0	
Response	
Thank you for your comments. Please see revised Requirement R4. Removing "BES" should clear the confusion with applicability.	
Steven Belle - Dominion - Dominion Virginia Power - 1	

Answer	No
Document Name	
Comment	
Dominion supports EEI's comments.	
Likes 0	
Dislikes 0	
Response	
Thank you for your comments. Please see responses to the EEI's comments.	
Brian Millard - Tennessee Valley Authority - 1,3,5,6 - SERC, Group Name TVA RBB	
Answer	No
Document Name	
Comment	

TVA supports coordination among joint owners as an important goal. However, the proposed language essentially introduces a major coordination burden, and it assumes a level of entity collaboration, timing, and methodological alignment. It also raises a compliance risk for one entity being dependent on the responsiveness and practices of another.

TVA suggests modifying the draft language to provide flexibility and protects compliant TOs from being penalized for other's inaction(s), as follows:

"Each Transmission Owner with applicable Transmission station(s) and Transmission substation(s) identified in Requirement R1 containing Bulk Electric System (BES) Elements owned by multiple Transmission Owners shall coordinate with those each appropriate Transmission Owner(s) to determine and document their individual responsibilities for documenting a risk assessment methodology under Requirement R3 and for performing any required risk assessments per Requirement R5."

Or…

"Each Transmission Owner with applicable Transmission station(s) and Transmission substation(s) identified in Requirement R1 containing Bulk Electric System (BES) Elements owned by multiple Transmission Owners shall coordinate with those each appropriate Transmission Owner(s) to determine and document their individual responsibilities for documenting a risk assessment methodology under Requirement R3 and for performing any required risk assessments per Requirement R5. In cases where agreement is not achieved, each Transmission Owner shall independently assess and document its own responsibilities and the basis for any assumptions regarding joint ownership impacts."	
Likes 0	
Dislikes 0	
Response	
Thank you for your comments and suggestions. Requirement R4 is part of the SAR work scope number 5.	
Josh Schumacher - Black Hills Corporation - 6, Group Name Black Hills Corporation Segments 1, 3, 5, 6	
Answer	No
Document Name	
Comment	
Black Hills Corporation agrees with EEI's suggested revision to the language in Requirement R4. We also agree with adding content to the Technical Rationale describing how an entity can prove they do not have any jointly owned Transmission stations or substations that require coordinating with another party.	
Likes 0	
Dislikes 0	
Response	
Thank you for your comments. Please see responses to the EEI's comments.	
Isidoro Behar - Long Island Power Authority - 1	
Answer	No

Document Name	
Comment	

As a general comment, Req# 4 needs to be reviewed in detail to ensure clarity and to ensure clear compliance responsibilities.

Req #4 states:

"Each Transmission Owner with applicable Transmission station(s) and Transmission substation(s) identified in Requirement R1 containing Bulk Electric System (BES) Elements owned by multiple Transmission Owners shall coordinate with each appropriate Transmission Owner(s) to determine and document their individual and joint responsibilities for documenting a risk assessment methodology under Requirement R3 and for performing any required risk assessments per Requirement R5."

Req #4 now requires a Transmission Owner to DOCUMENT which TO is responsible for DOCUMENTING specific portions of the risk assessment methodology (RAM). In the previous version of the standard, it only asked TOs to document who is responsible for PERFORMING the risk assessment methodology, but now it must be explicitly outlined who is responsible for even DOCUMENTING parts of that RAM. We would like to point this out so that the SDT can verify if "documenting" individual and joint responsibilities for "documenting" a risk assessment methodology is part of the intent of this revised requirement.

Based on the Technical Rationale, the inclusion of "BES Elements" appears to reference the addition of jointly owned Transmission stations and Transmission substations in the Applicability section. However, introducing the term "BES Elements" creates confusion by shifting the focus to individual elements rather than the applicable Transmission stations and substations.

Req #4 specifically addresses facilities (BES Elements) with joint ownership to coordinate/collaborate. One improvement would be to include Transmission Owners whose stations have been identified as part of Req #2 to also be included in this requirement to coordinate. The ownership of the applicable and proximate stations may be different, and thus we feel the concept of coordination with respect to Req #2 should apply.

We note that there are various possibilities with respect to ownership and to what stations may be considered applicable versus proximate. It is noted that an applicable station owned by one TO may also be considered a proximate station from the perspective of another TO that owns an adjacent applicable station (and vice versa; a proximate station from the perspective of a TO may also be considered an applicable station by another TO).

Likes 0	
Dislikes 0	
Response	
Thank you for your comments. Based on your comments, the drafting team replaced “documenting a risk assessment methodology” with “performing”. The drafting team also removed “BES” to clear the confusion.	
David Melanson - NB Power Corporation - New Brunswick Power Transmission Corporation - 5	
Answer	No
Document Name	
Comment	
NB Power supports NPCCs comments: "Based on the Technical Rationale, the addition of “BES Elements” points to the addition of “jointly owned” Transmission stations and Transmission substations in the Applicability section. However, the introduction of the term(s) “BES Elements” adds confusion by speaking to Elements instead of the applicable Transmission stations and Transmission substations."	
Likes 0	
Dislikes 0	
Response	
Thank you for your comment. “BES” has been removed.	
Mark Garza - FirstEnergy - FirstEnergy Corporation - 4, Group Name FE Voter	
Answer	No
Document Name	
Comment	

FirstEnergy supports EEI comments which state: R4. Each Transmission Owner with applicable Transmission station(s) and Transmission substation(s) identified in Requirement R1 containing Bulk Electric System (BES) Elements **greater than 200 kV or identified as part of an IROL or essential to meeting an NPIR** owned by multiple Transmission Owners shall coordinate with each appropriate Transmission Owner(s) to determine and document their individual and joint responsibilities for documenting a risk assessment methodology under Requirement R3 and for performing any required risk assessments per Requirement R5. EEI also asks the drafting team to consider adding content to the Technical Rationale describing how an entity can prove that they do not have anyone to coordinate with because there are no jointly owned Transmission station(s) or Transmission substation(s).	
Likes 0	
Dislikes 0	
Response	
Thank you for your comments. Please see responses to the EEI's comments. "BES" has been removed. Please see revised Requirement R4.	
Diana Aguas - CenterPoint Energy Houston Electric, LLC - 1 - Texas RE	
Answer	No
Document Name	
Comment	
CEHE agrees with EEI's comments.	
Likes 0	
Dislikes 0	
Response	
Thank you for your comments. Please see responses to the EEI's comments.	
Stephen Stafford - Stephen Stafford On Behalf of: Greg Davis, Georgia Transmission Corporation, 1; - Stephen Stafford	
Answer	No

Document Name	
Comment	
The requirement is appropriate in the context that the referenced risk assessment is from a physical security perspective and not a transmission planning analysis perspective. Should the intent of this comment be applicable to physical security and not a transmission planning analysis, then our answer would be yes.	
Likes 0	
Dislikes 0	
Response	
Thank you for your comments. Study scenario(s) and other study assumptions ,as well as simulations, are part of the work scope from the SAR.	
Ronald Hoover - Bonneville Power Administration - 1,3,5,6 - WECC	
Answer	No
Document Name	
Comment	
BPA believes it would be more thorough to include R2-identified proximate substations in the language of R4, because proximate substations could be jointly owned and require the same coordination of roles and responsibilities for including them in R3 and R5 activities.	
Likes 0	
Dislikes 0	
Response	
Thank you for your comments. Requirement R4 only applies to R1, not proximate stations. The drafting team removed “BES” to clear the confusion.	
Jeffrey Streifling - NB Power Corporation - 1	

Answer	No
Document Name	
Comment	
Based on the Technical Rationale, the addition of “BES Elements” points to the addition of “jointly owned” Transmission stations and Transmission substations in the Applicability section. However, the introduction of the term(s) “BES Elements” adds confusion by speaking to Elements instead of the applicable Transmission stations and Transmission substations.	
Likes 0	
Dislikes 0	
Response	
Thank you for your comments. Requirement R4 only applies to R1, not proximate stations. The drafting team removed “BES” to clear the confusion.	
Melanie Wong - Seminole Electric Cooperative, Inc. - 5	
Answer	No
Document Name	
Comment	
Likes 0	
Dislikes 0	
Response	
Thank you for your feedback.	
Kennedy Meier - Electric Reliability Council of Texas, Inc. - 2	
Answer	Yes
Document Name	
Comment	

ERCOT joins the comments submitted by the IRC SRC and adopts them as its own.	
Likes 0	
Dislikes 0	
Response	
Thank you for your comments and support. Please see responses to the IRC SRC's comments.	
Monika Montez - California ISO - 2 - WECC, Group Name ISO/RTO Council Standards Review Committee (SRC)	
Answer	Yes
Document Name	
Comment	
The ISO/RTO Council (IRC) Standards Review Committee (SRC) agrees that the SAR provides clarity.	
Likes 0	
Dislikes 0	
Response	
Thank you for your comment and support.	
Nick Leathers - Nick Leathers On Behalf of: David Jendras Sr, Ameren - Ameren Services, 3, 6, 1; - Nick Leathers	
Answer	Yes
Document Name	
Comment	
This requirement does not apply to Ameren.	
Likes 0	
Dislikes 0	

Response	
Thank you for your feedback and support.	
Ben Hammer - Western Area Power Administration - 1	
Answer	Yes
Document Name	
Comment	
An auditor may asks a Registered Entity to produce evidence proving a negative, i.e. that one or more subs are solely owned. M4 discusses how to show evidence that coordination with joint owners has been completed, but it would be helpful if the drafting team could provide clarity on what to provide as evidence if no joint owners are identified.	
Likes 0	
Dislikes 0	
Response	
Thank you for your comments and support. Technical Rationale document will clarify more on the evidence.	
Timothy Singh - Timothy Singh On Behalf of: Israel Perez, Salt River Project, 3, 6, 5, 1; Laura Somak, Salt River Project, 3, 6, 5, 1; Mathew Weber, Salt River Project, 3, 6, 5, 1; Matthew Jaramilla, Salt River Project, 3, 6, 5, 1; - Timothy Singh	
Answer	Yes
Document Name	
Comment	
SRP agrees with Requirement R4 addressing the SARs concern about joint ownership.	
Likes 0	
Dislikes 0	
Response	
Thank you for your comment and support.	

Matt Carden - Southern Company - Southern Company Services, Inc. - 1	
Answer	Yes
Document Name	
Comment	

Southern Company agrees with Requirement R4 with the below suggestion for consideration:

The removal of including “documentating a risk assessment methodology under Requirement R3”. This is redundant since any Transmission Owner performing Requirement R5 must have a risk assessment methodology for the stations being assessed per Requirements R1, R2, and R4.

R4.
Each Transmission Owner with applicable Transmission station(s) and Transmission substation(s) identified in Requirement R1 containing Bulk Electric System (BES) Elements owned by multiple Transmission Owners shall coordinate with each appropriate Transmission Owner(s) to determine and document their individual and joint responsibilities for documenting a risk assessment methodology under Requirement R3 and for performing any required risk assessments per Requirement R5.

Likes 0	
Dislikes 0	
Response	

Thank you for your comments and support. Please see revised language. The drafting team removed “documentating a risk assessment methodology under” as suggested.

Misty Carneal - Duke Energy - 1,3,5,6 - Texas RE,SERC,RF	
Answer	Yes
Document Name	
Comment	

Duke Energy agrees with the modifications made to R4.	
Likes 0	
Dislikes 0	
Response	
Thank you for your support.	
Nikki Carson-Marquis - Nikki Carson-Marquis On Behalf of: Theresa Allard, Minnkota Power Cooperative Inc., 1; - Nikki Carson-Marquis	
Answer	Yes
Document Name	
Comment	
Likes 0	
Dislikes 0	
Response	
Thank you for your support.	
Randy Peters - Manitoba Hydro - 1,3,5,6 - MRO	
Answer	Yes
Document Name	
Comment	
: It makes sense to coordinate in cases where there are joint owners	
Likes 0	

Dislikes 0	
Response	
Thank you for your support.	
Andrew Smith - APS - Arizona Public Service Co. - 5	
Answer	Yes
Document Name	
Comment	
AZPS agrees with the modifications made in R4	
Likes 0	
Dislikes 0	
Response	
Thank you for your support.	
Amy Wilke - American Transmission Company, LLC - 1	
Answer	Yes
Document Name	
Comment	
ATC agrees with MRO NSRF comments.	
Likes 0	
Dislikes 0	
Response	
Thank you for your comment and support. Please see responses to the MRO NSRF's comments.	
Amy Key - Berkshire Hathaway Energy - MidAmerican Energy Co. - 3	

Answer	Yes
Document Name	
Comment	
MEC has no comment	
Likes 0	
Dislikes 0	
Response	
Thank you for your support.	
Anna Martinson - MRO - 1,2,3,4,5,6 - MRO, Group Name MRO Group	
Answer	Yes
Document Name	
Comment	
MRO NSRF has concerns that there may be situations in which an auditor asks a Registered Entity to produce evidence proving a negative, i.e. that one or more subs are solely owned. M4 discusses how to show evidence that you've coordinated with joint owners, but it would be helpful if the drafting team could provide clarity on what to provide as evidence if no joint owners are identified.	
Likes 0	
Dislikes 0	
Response	
Thank you for your comments and support. Technical Rationale document will clarify more on the evidence.	
Daniel Gacek - Exelon - 1, Group Name Exelon	
Answer	Yes
Document Name	
Comment	

Likes 0	
Dislikes 0	
Response	
Thank you for your support.	
Emma Halilovic - Hydro One Networks, Inc. - 1	
Answer	Yes
Document Name	
Comment	
Likes 0	
Dislikes 0	
Response	
Thank you for your support.	
Jennie Wike - Jennie Wike On Behalf of: John Merrell, Tacoma Public Utilities (Tacoma, WA), 1, 4, 5, 6, 3; - Jennie Wike, Group Name Tacoma Power	
Answer	Yes
Document Name	
Comment	
Likes 0	
Dislikes 0	
Response	
Thank you for your support.	
Elizabeth Davis - Elizabeth Davis On Behalf of: Thomas Foster, PJM Interconnection, L.L.C., 2; - Elizabeth Davis	

Answer	Yes
Document Name	
Comment	
Likes 0	
Dislikes 0	
Response	
Thank you for your support.	
Kelley Sargent - Puget Sound Energy, Inc. - 3	
Answer	Yes
Document Name	
Comment	
Likes 0	
Dislikes 0	
Response	
Thank you for your support.	
Carver Powers - Utility Services, Inc. - 4	
Answer	Yes
Document Name	
Comment	
Likes 0	
Dislikes 0	

Response	
Thank you for your support.	
Dan Perry - TXNM Energy - 1,3,5 - WECC,Texas RE	
Answer	Yes
Document Name	
Comment	
Likes 0	
Dislikes 0	
Response	
Thank you for your support.	
Wesley Maurer - Lower Colorado River Authority - 1 - Texas RE	
Answer	Yes
Document Name	
Comment	
Likes 0	
Dislikes 0	
Response	
Thank you for your support.	
Joseph Scott - Lower Colorado River Authority - 5	
Answer	Yes
Document Name	
Comment	

Likes 0	
Dislikes 0	
Response	
Thank you for your support.	
Richard Vendetti - NextEra Energy - 5	
Answer	Yes
Document Name	
Comment	
Likes 0	
Dislikes 0	
Response	
Thank you for your support.	
Chris Wagner - Santee Cooper - 1, Group Name Santee Cooper	
Answer	Yes
Document Name	
Comment	
Likes 0	
Dislikes 0	
Response	
Thank you for your support.	
Robert Follini - Avista - Avista Corporation - 3	

Answer	Yes
Document Name	
Comment	
Likes 0	
Dislikes 0	
Response	
Thank you for your support.	
Rebika Yitna - Rebika Yitna On Behalf of: Roger Brand, MEAG Power, 3, 1; - Rebika Yitna	
Answer	Yes
Document Name	
Comment	
Likes 0	
Dislikes 0	
Response	
Thank you for your support.	
Michelle Pagano - Con Ed - Consolidated Edison Co. of New York - 5	
Answer	Yes
Document Name	
Comment	
Likes 0	
Dislikes 0	

Response	
Thank you for your support.	
Mark Flanary - Midwest Reliability Organization - 10	
Answer	Yes
Document Name	
Comment	
Likes 0	
Dislikes 0	
Response	
Thank you for your support.	
Rachel Coyne - Texas Reliability Entity, Inc. - 10	
Answer	Yes
Document Name	
Comment	
Likes 0	
Dislikes 0	
Response	
Thank you for your support.	
Lincoln Burton - Con Ed - Consolidated Edison Co. of New York - 3	
Answer	Yes
Document Name	
Comment	

Likes 0	
Dislikes 0	
Response	
Thank you for your support.	
Wendy Kalidass - U.S. Bureau of Reclamation - 5	
Answer	Yes
Document Name	
Comment	
Likes 0	
Dislikes 0	
Response	
Thank you for your support.	
Jason Chandler - Con Ed - Consolidated Edison Co. of New York - 6	
Answer	Yes
Document Name	
Comment	
Likes 0	
Dislikes 0	
Response	
Thank you for your support.	
Dave Krueger - SERC Reliability Corporation - 10	

Answer	Yes
Document Name	
Comment	
Likes 0	
Dislikes 0	
Response	
Thank you for your support.	
Dermot Smyth - Con Ed - Consolidated Edison Co. of New York - 1, Group Name Con Edison	
Answer	Yes
Document Name	
Comment	
Likes 0	
Dislikes 0	
Response	
Thank you for your support.	
Phillip Martinez - Phillip Martinez On Behalf of: Richard Jackson, U.S. Bureau of Reclamation, 1, 5; - U.S. Bureau of Reclamation - 1 - WECC	
Answer	Yes
Document Name	
Comment	
Likes 0	
Dislikes 0	

Response	
Thank you for your support.	
Jodi Yeary - AEP - 3	
Answer	Yes
Document Name	
Comment	
Likes 0	
Dislikes 0	
Response	
Thank you for your support.	
Greg Sorenson - Greg Sorenson On Behalf of: Tremayne Brown, ReliabilityFirst , 10; - Greg Sorenson	
Answer	Yes
Document Name	
Comment	
Likes 0	
Dislikes 0	
Response	
Thank you for your support.	
Donna Wood - Tri-State G and T Association, Inc. - 1	
Answer	Yes
Document Name	
Comment	

Likes 0	
Dislikes 0	
Response	
Thank you for your support.	
Tim Kelley - Tim Kelley On Behalf of: Charles Norton, Sacramento Municipal Utility District, 3, 6, 4, 1, 5; Foung Mua, Sacramento Municipal Utility District, 3, 6, 4, 1, 5; Kevin Smith, Balancing Authority of Northern California, 1; Nicole Looney, Sacramento Municipal Utility District, 3, 6, 4, 1, 5; Ryder Couch, Sacramento Municipal Utility District, 3, 6, 4, 1, 5; Wei Shao, Sacramento Municipal Utility District, 3, 6, 4, 1, 5; - Tim Kelley, Group Name SMUD and BANC	
Answer	Yes
Document Name	
Comment	
Likes 0	
Dislikes 0	
Response	
Thank you for your support.	
Darko Kovac, P.E. - Gainesville Regional Utilities - 1,3,5	
Answer	Yes
Document Name	
Comment	
Likes 0	
Dislikes 0	
Response	

Thank you for your support.	
Thomas Breen - Berkshire Hathaway Energy - MidAmerican Energy Co. - 1	
Answer	Yes
Document Name	
Comment	
Likes 0	
Dislikes 0	
Response	
Thank you for your support.	
Jessica Cordero - Unisource - Tucson Electric Power Co. - 1	
Answer	Yes
Document Name	
Comment	
Likes 0	
Dislikes 0	
Response	
Thank you for your support.	
James Keele - Entergy - 3	
Answer	Yes
Document Name	
Comment	

Likes 0	
Dislikes 0	
Response	
Thank you for your support.	
Tamarra Hardie - Public Utility District No. 1 of Chelan County - 6, Group Name CHPD	
Answer	Yes
Document Name	
Comment	
Likes 0	
Dislikes 0	
Response	
Thank you for your support.	
Kevin Conway - Western Power Pool - 4	
Answer	Yes
Document Name	
Comment	
Likes 0	
Dislikes 0	
Response	
Thank you for your support.	
Sean Steffensen - IDACORP - Idaho Power Company - 1	
Answer	Yes

Document Name	
Comment	
Likes 0	
Dislikes 0	
Response	
Thank you for your support.	
Alison Nickells - NiSource - Northern Indiana Public Service Co. - 1	
Answer	Yes
Document Name	
Comment	
Likes 0	
Dislikes 0	
Response	
Thank you for your support.	
Lexi Dobrzysnki - Lexi Dobrzysnki On Behalf of: Angela Dockter, Alliant Energy Corporation Services, Inc., 4; - Lexi Dobrzysnki	
Answer	
Document Name	
Comment	
Alliant Energy mirrors the MRO NSRF group Comments.	
Likes 0	
Dislikes 0	

Response
Thank you for your comments. Please see responses to the MRO NSRF's comments.

5. Do you agree with the modifications made in CIP-014-4 with adding Requirement R5 to address the issues identified in the SAR? If you do not agree, please provide your recommendation and, if appropriate, technical or procedural justification.	
Jeffrey Streifling - NB Power Corporation - 1	
Answer	No
Document Name	
Comment	
Clarify if at the end of the 36-month period the entity must have the Risk Assessment started or completed? TFIST suggest splitting the operational assessment and security assessment into distinct assessments in the timeline to reduce confusion, and not just the “risk assessment”.	
Likes 0	
Dislikes 0	
Response	
Thank you for your comments. At the end of the 36-month period the entity must have the Risk Assessment completed.	
Ronald Hoover - Bonneville Power Administration - 1,3,5,6 - WECC	
Answer	No
Document Name	
Comment	
BPA believes R5 is missing a requirement to coordinate in order to ensure data from proximate Transmission stations and sub-stations can be obtained and validated. Without a requirement to coordinate, BPA believes there would be difficulty identifying the Primary Control Center operationally controlling the proximate Transmission stations and sub-stations. BPA also recommends adding language to R5 to clarify how a Registered Entity should address negative responses from proximate substation owners.	
Likes 0	
Dislikes 0	

Response	
Thank you for your comments. The drafting team added proximate stations as part of Requirement R5.	
Stephen Stafford - Stephen Stafford On Behalf of: Greg Davis, Georgia Transmission Corporation, 1; - Stephen Stafford	
Answer	No
Document Name	
Comment	
There is no issue with performing a risk assessment every 36 months. However, Transmission Owners are not the appropriate registered entity to conduct planning analyses. Nor are the CIP standards the appropriate place to document planning analysis requirements. Planning studies should be governed within the TPL group of standards.	
Likes 0	
Dislikes 0	
Response	
Thank you for your comments. Performing analysis is part of the SAR work scope to determine applicabilities.	
Jessica Cordero - Unisource - Tucson Electric Power Co. - 1	
Answer	No
Document Name	
Comment	
TEPC agrees with EEI's comments.	
Likes 0	
Dislikes 0	
Response	
Thank you for your comment. Please see responses to the EEI’s comments.	
Mark Garza - FirstEnergy - FirstEnergy Corporation - 4, Group Name FE Voter	

Answer	No
Document Name	
Comment	

FirstEnergy asks for clarification of responsibilities toward R5 - specifically as realted to unregistered DERs and IBRs.

FirstEnergy also supports EEI's comments which state:

EEI suggests the following revisions to Requirement R5.

The revised draft CIP-014-4 Requirement R5 includes a new statement: "If proximate Transmission station(s) and Transmission substation(s) were identified in Requirement R2, they should also be

included in the risk assessment." The word "should" could be interpreted as a recommendation instead of a mandatory requirement.

Additionally, by referring to "proximate Transmission station(s) and Transmission substation(s)… identified in Requirement R2" in Requirement R5, all identified proximate Transmission station(s) and Transmission substation(s) would be subject to Requirements R8-R10, not just those that are applicable.

If it is the intention of the drafting team to require applicable proximate Transmission station(s) and Transmission substation(s) to be included in the Requirement R5 risk assessment, EEI suggests the following:

R5. At least once every 36 calendar months, each Transmission Owner shall perform a risk assessment to identify applicable Transmission station(s) and Transmission substation(s) identified in Requirement R1, that if rendered inoperable or damaged could result in instability, uncontrolled separation, or Cascading within an interconnection, using the methodology established in Requirement R3, including any Transmission station(s) and Transmission substation(s) identified in accordance with Requirement R4.

EEI also asks the drafting team to consider adding information to the technical rationale discussing scenarios where a new risk assessment demonstrates that a substation is no longer applicable to CIP-014, but a previous physical security plan includes security measures with future due dates. The technical rationale could include discussion of actions to take when security measures are no longer required for the de-classified transmission substation(s).

Likes 0	
Dislikes 0	

Response
Thank you for your comment. Please see responses to the EEI's comments. This Standard does not apply to unregistered DERs and IBRs. The Requirement was modified. Proximate stations only should be assessed per Requirement R3, Parts 3.3.2 and 3.5. "Should" was replaced by "shall". Technical Rationale document will be revised as suggested before posting.

David Melanson - NB Power Corporation - New Brunswick Power Transmission Corporation - 5	
Answer	No
Document Name	
Comment	
NB Power supports NPCCs comments: "R5. Please clarify whether, at the end of the 36-month period, the entity is required to have initiated or completed the Risk Assessment. NPCC RSC recommends separating the operational assessment and security assessment into distinct components within the timeline to reduce confusion, rather than referring to both collectively as the "risk assessment." In the final sentence of R5, the phrase "they should also be included in the risk assessment" raises a question: does this imply that proximate Transmission station(s) and Transmission substation(s) are optional in the risk assessment?"	
Likes 0	
Dislikes 0	

Response
Thank you for your comments. Please see responses to the NPCC's comments.
Nikki Carson-Marquis - Nikki Carson-Marquis On Behalf of: Theresa Allard, Minnkota Power Cooperative Inc., 1; - Nikki Carson-Marquis

Answer	No
Document Name	
Comment	

MPC strongly disagrees with the use of a 36-month timeframe for utilities who have not previously identified any Transmission stations or substations as critical as it will lead to increased study costs with little or no benefit to the reliability of the BES. Instead, MPC proposes retaining the requirement to perform a risk assessment every 60 months for TOs that have not previously identified applicable Transmission stations or substations, and include Transmission station(s) and Transmission substation(s) planned to be in service within 60 calendar months.

SAR objective number 2 states a goal for this project is to "correct any discrepancies between the study period, frequency of study, and the base case(s) a Transmission Owner uses." This is the basis for the SDT's justification to change the risk assessment timeframe from 60 months for TOs without applicable Transmission stations or substations to 36 months for all TOs without exception. Further, the Technical Rationale states the change to 36 months was to align the CIP-014 risk assessment with the annual model build time frame of Standard TPL-001. Because the CIP-014 analysis does not depend on the models built for TPL-001, MPC believes changing the risk assessment time frame to align with the TPL-001 model build process does not provide benefit to the CIP-014 analysis. Additionally, the existing 60 month timeframe for TOs without applicable Transmission station(s)/substation(s) still aligns with the 12-month model build timeframe of the TPL-001 standard.

MPC continues to hold the position that given the very slow pace of construction of new electrical infrastructure due to increased equipment lead times, supply chain constraints, and labor shortages, it is highly unlikely that a modification to an existing non-critical station or substation that would result in the station or substation becoming critical would be planned, designed, and constructed within 36 months. It is equally unlikely that a newly constructed CIP-014 critical (sub)station would be completed within this timeframe. As stations and substations planned to be in service within 24 months of the risk assessment are already required to be included under R1 of CIP-014-3, changing the risk assessment timeframe from 60 months to 36 months is very unlikely to identify new Transmission stations or substations that would not be identified under CIP-014-3.

For utilities who have not identified previously identified (sub)stations as critical, moving the risk assessment timeframe from 60 calendar months to 36 calendar months will result in increased costs due to more frequent risk assessments, with the more frequent assessments having no BES reliability benefit as they have little to no chance of identifying stations or substations as CIP-014 critical that would not already have been under the CIP-014-3.

Likes 0	
Dislikes 0	
Response	
Thank you for your comments. The drafting team does not agree with MRC's interpretation on "correct any discrepancies between the study period, frequency of study". Also, 36 calendar months is a long period for not looking at one's system. A lot of things could have changed during 36 calendar months.	
Isidoro Behar - Long Island Power Authority - 1	
Answer	No
Document Name	
Comment	

In general, we recommend that the wording in the main requirement section of Req #5 be reviewed in detail for clarity.

Requirement #5 states:

"*At least once every 36 calendar months, each Transmission Owner shall perform a risk assessment to identify applicable Transmission station(s) and Transmission substation(s) identified in Requirement R1, that if rendered inoperable or damaged could result in instability, uncontrolled separation, or Cascading within an Interconnection, using the methodology established in Requirement R3, including any Transmission station(s) and Transmission substation(s) identified in accordance with Requirement R4. If proximate Transmission station(s) and Transmission substation(s) were identified in Requirement R2, they should also be included in the risk assessment*."

a) This requirement introduces the concept of "*that if rendered inoperable or damaged*". While the verbiage **"that if rendered inoperable or damaged"** may be introduced within the Technical Rationale, this verbiage is confusing when reading Req #5 – and as such it is recommended to correlate what is meant by "that if rendered inoperable or damaged" within Requirement #3 (or introduce this concept within the Req #3). Requirement #3 mentions "the loss of each applicable Transmission station or Transmission substation identified in Requirement R1" – with no mention or correlation of "loss of each station" to "that if rendered inoperable or damaged".

b) The verbiage states "using the methodology established in Requirement R3, including any Transmission **station(s)** and Transmission **substation(s)** identified in accordance with Requirement R4". However, as written, Req #4 relates to the coordination with respect to "**Bulk Electric System (BES) Elements** owned by multiple Transmission Owners". As written, Req #4 does not identify "stations".

c) The verbiage states "If proximate Transmission station(s) and Transmission substation(s) were identified in Requirement R2, they **should** also be included in the risk assessment."

This implies that the inclusion of proximate stations in the risk assessment is optional. If this is a requirement, the term "should" should be replaced by "shall".

d) The verbiage states "If **proximate** Transmission station(s) and Transmission substation(s) were identified in Requirement R2, they **should** also be included in the risk assessment." This requirement is not clear and needs clarification.

- This wording contradicts with the wording in Req #3 which states: "*Each Transmission Owner shall have a documented risk assessment methodology for evaluating the loss of each **applicable** Transmission station or Transmission substation identified in Requirement R1.*"
- Does this mean that requirements 7 through 10 apply to proximate stations if the fault on the proximate station leads to instability, uncontrolled separation, or Cascading within an Interconnection?
- For proximate stations, it is required to identify them and apply a fault on them. For the risk assessment, what specifically needs to be done for the proximate stations?

e) Please clarify whether, at the end of the 36-month period, the entity is required to have initiated or completed the Risk Assessment. We recommend separating the operational assessment and security assessment into distinct components within the timeline to reduce confusion, rather than referring to both collectively as the "risk assessment."

Likes 0	
Dislikes 0	

Response
Thank you for your comments. The Standard has been modified to clarify some of your concerns. The phrase “that if rendered inoperable or damaged” is in the existing approved version of CIP-014. It is generally understood by the industry. “BES” has been removed from Requirement R4. “Should” has been replaced by “shall”. R7 through R10 only apply to the applicable stations on the critical list which are verified by the third party (R6). Please see Requirement R3, Parts 3.3.2 and 3.5 and associated Technical Rationale document for assesspent on proximate stations. At the end of the 36-month period, the entity is required to have completed the Risk Assessment.
Josh Schumacher - Black Hills Corporation - 6, Group Name Black Hills Corporation Segments 1, 3, 5, 6

Answer	No
Document Name	

Comment
Black Hills Corporation agrees with EEI’s recommended changes to the language in Requirement R5. This change makes it clear which proximate Transmission stations and Transmission substations should be included in the scope for all requirements. The current language could cause confusion as to which proximate Transmission station/substations need to be included for each requirement, thus expanding the scope of the standard further than is intended. Black Hills Corporation also agrees with EEI’s suggestion to add information to the technical rationale for scenarios where a risk assessment demonstrates a previously applicable substation no longer is, and what actions to take when security measures are no longer required for a specific substation.

Likes 0	
Dislikes 0	

Response

Thank you for your comments. Please see responses to the EEI's comments.	
Misty Carneal - Duke Energy - 1,3,5,6 - Texas RE,SERC,RF	
Answer	No
Document Name	
Comment	
Duke Energy supports EEI's recommendation that the Drafting Team replace "should" in the last sentence of paragraph one with "shall".	
Likes 0	
Dislikes 0	
Response	
Thank you for your comments. Please see responses to the EEI's comments. The word "should" has been replaced by "shall".	
Steven Belle - Dominion - Dominion Virginia Power - 1	
Answer	No
Document Name	
Comment	
Dominion supports EEI's comments.	
Likes 0	
Dislikes 0	
Response	
Thank you for your comments. Please see responses to the EEI's comments.	
Chantal Mazza - Chantal Mazza On Behalf of: Junji Yamaguchi, Hydro-Quebec (HQ), 1, 5; Nicolas Turcotte, Hydro-Quebec (HQ), 1, 5; - Chantal Mazza	
Answer	No
Document Name	

Comment	
R5. Please clarify whether, at the end of the 36-month period, the entity is required to have initiated or completed the Risk Assessment. NPCC RSC recommends separating the operational assessment and security assessment into distinct components within the timeline to reduce confusion, rather than referring to both collectively as the "risk assessment." In the final sentence of R5, the phrase "they should also be included in the risk assessment" raises a question: does this imply that proximate Transmission station(s) and Transmission substation(s) are optional in the risk assessment?	
Likes 0	
Dislikes 0	
Response	
At the end of the 36-month period, the entity is required to have completed the Risk Assessment. Only Requirement R3, Parts 3.3.2 and 3.5 are in scope for R5, not the whole assessment. .	
Alan Kloster - Alan Kloster On Behalf of: Jeremy Harris, Evergy, 3, 5, 1, 6; Kevin Frick, Evergy, 3, 5, 1, 6; Marcus Moor, Evergy, 3, 5, 1, 6; Tiffany Lake, Evergy, 3, 5, 1, 6; - Alan Kloster	
Answer	No
Document Name	
Comment	
Evergy supports and incorporates by reference the comments of the Edison Electric Institute for question #5.	
Likes 0	
Dislikes 0	
Response	
Thank you for your comments. Please see responses to the EEI's comments.	
Jamison Cawley - Nebraska Public Power District - 1	

Answer	No
Document Name	
Comment	
“Rendered inoperable” should be eliminated from this standard. This term has no definition and leads the RE to move toward a requirement to study the “Smoking Crater” scenario. There has been no documented “Smoking Crater” scenario documented on US soil at a BES substation and to force TO’s to develop fault scenarios for an unrealistic event is unreasonable.	
Likes 1	Nebraska Public Power District, 5, Bender Ronald
Dislikes 0	
Response	
Thank you for your comments. This term is in currently approved version of CIP-014. It is generally understood and accepted by the industry.	
Zahid Qayyum - New York Power Authority - 5	
Answer	No
Document Name	
Comment	
NYPA supports NPCC RSC comments.	
Likes 0	
Dislikes 0	
Response	
Thank you for your comments. Please see the responses to the NPCC RSC’s comments.	
Ben Hammer - Western Area Power Administration - 1	
Answer	No
Document Name	

Comment
Recommend removing “including any Transmission station(s) and Transmission substation(s) identified in accordance with Requirement R4. If proximate Transmission station(s) and Transmission substation(s) were identified in Requirement R2, they should also be included in the risk assessment.” from R5. Rational for removing: This language is redundant because the inclusion of proximate substations within the risk assessment methodology is already established by the previous Requirements (R2 and R3.3.2) and therefore will inherently be included in the risk assessment. Adding this to Requirement R5 could potentially add confusion. Proximate substations, irrespective of ownership, must be included in the risk assessments; but Requirement R5 is talking about performing the risk assessment and identifying the applicable stations (owned by the TO performing the Risk Assessment) from Requirement R1 that could result in instability, uncontrolled separation, or Cascading within an Interconnection… Proximate substations owned by different TOs could have different Methodologies. A proximate substation not owned by the TO performing the risk assessment cannot be identified as “critical – that if rendered inoperable or damaged could result in instability, uncontrolled separation, or Cascading” by that TO, even though the proximate substations will be included within the risk assessment based on Requirements R2 and R3. If this redundant language isn’t removed, it could add confusion around this. The language pointing back to Requirement R4: “...including any Transmission stations(s) and Transmission substation(s) identified in accordance with Requirement R4.” is also not needed and redundant. It doesn’t add confusion in the way the reference back to proximate substations does, but it is still unnecessary. Requirement R4 talks about coordinating the responsibilities if there are BES Elements owned by multiple TOs within a substation already identified in Requirement R1. **The list of substations identified by Requirement R1 are the “superset” and therefore all that is needed in Requirement R5 is point back to R1** (not R4).

Likes 0	
Dislikes 0	

Response
Thank you for your comments and suggestions. Please see revised Requirement R5. After reviewing and discussion, the drafting team added “per Requirement R3, Parts 3.3.2 and 3.5” for proximate stations for clarification.
Ruida Shu - Northeast Power Coordinating Council - 10, Group Name NPCC RSC

Answer	No

Document Name	
Comment	
R5. Please clarify whether, at the end of the 36-month period, the entity is required to have initiated or completed the Risk Assessment. NPCC RSC recommends separating the operational assessment and security assessment into distinct components within the timeline to reduce confusion, rather than referring to both collectively as the "risk assessment." In the final sentence of R5, the phrase "they should also be included in the risk assessment" raises a question: does this imply that proximate Transmission station(s) and Transmission substation(s) are optional in the risk assessment?	
Likes 0	
Dislikes 0	
Response	
Thank you for your comment and recommendation. At the end of the 36-month period, the entity is required to have completed the Risk Assessment. The drafting team changed "should" to "shall". Therefore, the proximate stations are required, not optional.	
Nick Leathers - Nick Leathers On Behalf of: David Jendras Sr, Ameren - Ameren Services, 3, 6, 1; - Nick Leathers	
Answer	No
Document Name	
Comment	
Ameren agrees with EEI's comments.	
Likes 0	
Dislikes 0	
Response	
Thank you for your comment. Please see responses to the EEI's comments.	

Selene Willis - Edison International - Southern California Edison Company - 5	
Answer	No
Document Name	
Comment	
"Please see EEI Comments"	
Likes 0	
Dislikes 0	
Response	
Thank you for your comment. Please see responses to the EEI's comments.	
Hillary Creurer - Allete - Minnesota Power, Inc. - 1	
Answer	No
Document Name	
Comment	
Minnesota Power supports EEI's comments.	
Likes 0	
Dislikes 0	
Response	
Thank you for your comment. Please see responses to the EEI's comments.	
Kristine Martz - Edison Electric Institute - NA - Not Applicable - NA - Not Applicable	
Answer	No
Document Name	
Comment	

EEI suggests the following revisions to Requirement R5.

The revised draft CIP-014-4 Requirement R5 includes a new statement: "If proximate Transmission station(s) and Transmission substation(s) were identified in Requirement R2, they should also be included in the risk assessment." EEI suggests removing this sentence because Requirement R5 already requires TOs to perform a risk assessment using the methodology established in Requirement R3, and Requirement R3 part 3.3.2 includes Transmission station(s) and Transmission substation(s) determined in accordance with Requirement R2 as being in proximity to an applicable Transmission station or Transmission substation.

Additionally, including a separate reference to "proximate Transmission station(s) and Transmission substation(s)… identified in Requirement R2" in Requirement R5, could be confused for an expansion in scope because, as written, the reference is to identified proximate Transmission station(s) and Transmission substation(s) in Requirement R2, not those that are identified through the performance of the Requirement R5 risk assessment. The scope of Requirement R5 is important because of its tie to Requirements R8-R10.

EEI suggests the following:

R5. At least once every 36 calendar months, each Transmission Owner shall perform a risk assessment to identify applicable Transmission station(s) and Transmission substation(s) identified in Requirement R1, that if rendered inoperable or damaged could result in instability, uncontrolled separation, or Cascading within an interconnection, using the methodology established in Requirement R3, including any Transmission station(s) and Transmission substation(s) identified in accordance with Requirement R4.

EEI also asks the drafting team to consider adding information to the technical rationale discussing scenarios where a new risk assessment demonstrates that a substation is no longer applicable to CIP-014, but a previous physical security plan includes security measures with future due dates. The technical rationale could include discussion of actions to take when security measures are no longer required for the de-classified transmission substation(s).

Likes 0	
Dislikes 0	

Response

Thank you for your comments and suggestions. Please see revised Requirement R5. After reviewing and discussion, the drafting team added "per Requirement R3, Parts 3.3.2 and 3.5" for proximate stations for clarification.

Joseph Scott - Lower Colorado River Authority - 5

Answer	No
Document Name	
Comment	
We do not agree with the changes to R5 as currently written. Please see our responses to question 2 and 3. We share the same concerns regarding data availability, regional boundaries, and practicality of assessing proximate substations outside of our control.	
Likes 0	
Dislikes 0	
Response	
Thank you for your comments. SAR workscope number five directs the drafting team to account for adjacent Transmission stations or Transmission substations of differing ownership as well as for those Transmission stations or Transmission substations within line-of-sight to each other. Coordination has to be made between registered entities.	
Gail Elliott - Gail Elliott On Behalf of: Michael Moltane, International Transmission Company Holdings Corporation, 1; - Gail Elliott	
Answer	No
Document Name	
Comment	
For 5.1, failure to perform the entirety of the risk assessment could have an TO not completing either the stability of steady state portion of the study. If the third party reviewer identified a mistake in the piece of the study that was completed, they have nothing to verify for the second half of the study as it was not performed. Changes to the system which add resiliency to the system may have changed a previous critical station to a non-critical station. Not studying it going forward means that the costs would continue to be incurred for protecting a station that does not require it. ITC also suggests the following revisions to Requirement R5. The revised draft CIP-014-4 Requirement R5 includes a new statement: “If proximate Transmission station(s) and Transmission substation(s) were identified in Requirement R2, they should also be included in the risk assessment.” EEI suggests removing this sentence because Requirement R5 already requires TOs to perform a risk assessment using the methodology established in Requirement R3, and	

Requirement R3 part 3.3.2 includes Transmission station(s) and Transmission substation(s) determined in accordance with Requirement R2 as being in proximity to an applicable Transmission station or Transmission substation. Additionally, including the separate reference to "proximate Transmission station(s) and Transmission substation(s)… identified in Requirement R2" in Requirement R5, could be confused for an expansion in scope because, as written, the reference is to identified proximate Transmission station(s) and Transmission substation(s) in Requirement R2, not those that are identified through the performance of the Requirement R5 risk assessment. Furthermore R4 should not be included in R5. Only stations identified in R1 need to be reviewed to determine if they are jointly owned. R4 should only identify those stations identified in R1 that an entity would no longer need to study as the other joint owner will be performing it. The scope of Requirement R5 is important because of its tie to Requirements R8-R10. ITC suggests the following: R5. At least once every 36 calendar months, each Transmission Owner shall perform a risk assessment to identify applicable Transmission station(s) and Transmission substation(s) identified in Requirement R1, that if rendered inoperable or damaged could result in instability, uncontrolled separation, or Cascading within an interconnection, using the methodology established in Requirement R3, excluding any Transmission station(s) and Transmission substation(s) identified in accordance with Requirement R4 to be reviewed by the entity identified in R4.. If proximate Transmission station(s) and Transmission substation(s) were identified in Requirement R2, they should also be included in the risk assessment."	
Likes 0	
Dislikes 0	
Response	
Thank you for your comment and suggestions. Please see revised Requirement R5. After reviewing and discussion, the drafting team added "per Requirement R3, Parts 3.3.2 and 3.5" for proximate stations for clarification.	
Wesley Maurer - Lower Colorado River Authority - 1 - Texas RE	
Answer	No
Document Name	
Comment	

We do not agree with the changes to R5 as currently written. Please see our responses to question 2 and 3. We share the same concerns regarding data availability, regional boundaries, and practicality of assessing proximate substations outside of our control.	
Likes 0	
Dislikes 0	
Response	
Thank you for your comments. SAR workscope number five directs the drafting team to account for adjacent Transmission stations or Transmission substations of differing ownership as well as for those Transmission stations or Transmission substations within line-of-sight to each other. Coordination has to be made between registered entities.	
Elizabeth Davis - Elizabeth Davis On Behalf of: Thomas Foster, PJM Interconnection, L.L.C., 2; - Elizabeth Davis	
Answer	No
Document Name	
Comment	
PJM does not recommend relying on past risk assessments, and instead recommends status quo to ensure a more accurate assessment of the Transmission station or Transmission substations. This is based on PJM's observation of major planning assumption changes in recent years that have been impacting reliability analysis.	
Likes 0	
Dislikes 0	
Response	
Thank you for your comments. An entity can rely on past risk assessments only if they do not have any changes in their system.	
Robert Blackney - Edison International - Southern California Edison Company - 1	
Answer	No
Document Name	
Comment	

See comments submitted by Edison Electric Institute.	
Likes 0	
Dislikes 0	
Response	
Thank you for your comment. Please see responses to the EEI's comments.	
Emma Halilovic - Hydro One Networks, Inc. - 1	
Answer	No
Document Name	2023-06 Draft_3_Comment_Form.docx
Comment	
Modify to suite the recommendation given in the attached.	
Likes 0	
Dislikes 0	
Response	
Thank you for your comments. The drafting team reviewed and considered the comments submitted.	
Melanie Wong - Seminole Electric Cooperative, Inc. - 5	
Answer	No
Document Name	
Comment	
Likes 0	
Dislikes 0	
Response	

Thank you for your feedback.	
Amy Wilke - American Transmission Company, LLC - 1	
Answer	Yes
Document Name	
Comment	
ATC agrees with MRO NSRF comments.	
Likes 0	
Dislikes 0	
Response	
Thank you for your support. Please see the responses to the MRO NSRF's comments.	
Andrew Smith - APS - Arizona Public Service Co. - 5	
Answer	Yes
Document Name	
Comment	
AZPS agrees with comments submitted by EEI on behalf of their members to request a sub bullet be added to include clarification around Requirement 9.3 if the substation is no longer classified as critical based on a new risk assessment.	
Likes 0	
Dislikes 0	
Response	
Thank you for your comments and support. The drafting team reviewed and considered the comments submitted.	
Randy Peters - Manitoba Hydro - 1,3,5,6 - MRO	
Answer	Yes
Document Name	

Comment	
It would be nice to add a clear requirement (5.4) that the previous risk assessment can also be used if there have been no significant changes to the network in the 3 years since the previous assessment	
Likes 0	
Dislikes 0	
Response	
Thank you for your comments and support. Sub-Requirement R5.2 already addressed such scenario.	
Matt Carden - Southern Company - Southern Company Services, Inc. - 1	
Answer	Yes
Document Name	
Comment	
Southern Company agrees with Requirement R5 but recommends removing the language added in Draft 3 “If proximate Transmission station(s) and Transmission substation(s) were identified in Requirement R2, they should also be included in the risk assessment”. This is addressed in the methodology required per Requirement R3.3 and could lead to misinterpretations of the scope of Requirement R5.	
Likes 0	
Dislikes 0	
Response	
Thank you for your support and comments. Please see revised Requirement R5. The drafting team added “per Requirement R3, Parts 3.3.2 and 3.5” for proximate stations to clarify.	
Timothy Singh - Timothy Singh On Behalf of: Israel Perez, Salt River Project, 3, 6, 5, 1; Laura Somak, Salt River Project, 3, 6, 5, 1; Mathew Weber, Salt River Project, 3, 6, 5, 1; Matthew Jaramilla, Salt River Project, 3, 6, 5, 1; - Timothy Singh	
Answer	Yes
Document Name	

Comment	
SRP agrees with Requirement R5 addressing that risk assessments are performed every 36 months.	
Likes 0	
Dislikes 0	
Response	
Thank you for your support.	
Rebika Yitna - Rebika Yitna On Behalf of: Roger Brand, MEAG Power, 3, 1; - Rebika Yitna	
Answer	Yes
Document Name	
Comment	
Clarification/Additonal Information requested: What is the Drafting Team expectation for physically protecting proximate stations owned by the entity? Are they to be treated the same as the applicable stations? What about protection of the proximate station if it is owned by another entity?	
Likes 0	
Dislikes 0	
Response	
Thank you for your support and comments. Please see revised Requirement R5. The drafting team added “per Requirement R3, Parts 3.3.2 and 3.5” for proximate stations to clarify.	
Robert Follini - Avista - Avista Corporation - 3	
Answer	Yes
Document Name	
Comment	

The remove of the ability to allow 60 calendar months for subsequent risk assessments when previous risk assessments did not identify any Transmission stations or Transmission substations tha if rendered inoperable or damaged could result in instability, uncontrolled separation, or Cascading within an Interconnection is not adequalety justified. The Technical Rational only states "…to reduce the periodicity options from previous versions…"	
Likes 0	
Dislikes 0	
Response	
Thank you for your support and comments. The SAR directs the drafting team to correct any discrepancies between the study period and frequency of study.	
Dan Perry - TXNM Energy - 1,3,5 - WECC,Texas RE	
Answer	Yes
Document Name	
Comment	
TXNM Energy agrees with EEI comments	
Likes 0	
Dislikes 0	
Response	
Thank you for your support. Please see responses to the EEI's comments.	
Lucinda Bradshaw - Lucinda Bradshaw On Behalf of: Byron Booker, Oncor Electric Delivery, 1; - Lucinda Bradshaw	
Answer	Yes
Document Name	
Comment	

N/A	
Likes 0	
Dislikes 0	
Response	
Thank you for your support.	
Monika Montez - California ISO - 2 - WECC, Group Name ISO/RTO Council Standards Review Committee (SRC)	
Answer	Yes
Document Name	
Comment	
The ISO/RTO Council (IRC) Standards Review Committee (SRC) agrees that the SAR provides clarity.	
Likes 0	
Dislikes 0	
Response	
Thank you for your support.	
Kennedy Meier - Electric Reliability Council of Texas, Inc. - 2	
Answer	Yes
Document Name	
Comment	
ERCOT joins the comments submitted by the IRC SRC and adopts them as its own.	
Likes 0	
Dislikes 0	

Response	
Thank you for your support.	
Daniel Gacek - Exelon - 1, Group Name Exelon	
Answer	Yes
Document Name	
Comment	
As stated in our response to Questions 3 above: To reduce the burden on smaller TOs of developing an R3 methodology and performing the R5 planning studies, consider providing an option for entities to use the list of transmission stations or substations obtained from the Attachment 1 analysis, as the input to R7 for primary control center determination, and as the input to R8 to begin the physical attack evaluation. Attachment 1 would therefore be an option as the R3 methodology that would then be applied in R5. R4 would still be required. The R6 third party review would be limited to a review of the Attachment 1 analysis.	
Likes 0	
Dislikes 0	
Response	
Thank you for your support. Third-party verification was proved by the industry in the approved previous version. To remove Requirement R6 is out of scope for this project.	
Alison Nickells - NiSource - Northern Indiana Public Service Co. - 1	
Answer	Yes
Document Name	
Comment	
Likes 0	
Dislikes 0	

Response	
Thank you for your support.	
Sean Steffensen - IDACORP - Idaho Power Company - 1	
Answer	Yes
Document Name	
Comment	
Likes 0	
Dislikes 0	
Response	
Thank you for your support.	
Kevin Conway - Western Power Pool - 4	
Answer	Yes
Document Name	
Comment	
Likes 0	
Dislikes 0	
Response	
Thank you for your support.	
Tamarra Hardie - Public Utility District No. 1 of Chelan County - 6, Group Name CHPD	
Answer	Yes
Document Name	
Comment	

Likes 0	
Dislikes 0	
Response	
Thank you for your support.	
Anna Martinson - MRO - 1,2,3,4,5,6 - MRO, Group Name MRO Group	
Answer	Yes
Document Name	
Comment	
Likes 0	
Dislikes 0	
Response	
Thank you for your support.	
Amy Key - Berkshire Hathaway Energy - MidAmerican Energy Co. - 3	
Answer	Yes
Document Name	
Comment	
Likes 0	
Dislikes 0	
Response	
Thank you for your support.	
James Keele - Entergy - 3	

Answer	Yes
Document Name	
Comment	
Likes 0	
Dislikes 0	
Response	
Thank you for your support.	
Thomas Breen - Berkshire Hathaway Energy - MidAmerican Energy Co. - 1	
Answer	Yes
Document Name	
Comment	
Likes 0	
Dislikes 0	
Response	
Thank you for your support.	
Darko Kovac, P.E. - Gainesville Regional Utilities - 1,3,5	
Answer	Yes
Document Name	
Comment	
Likes 0	
Dislikes 0	

Response	
Thank you for your support.	
Tim Kelley - Tim Kelley On Behalf of: Charles Norton, Sacramento Municipal Utility District, 3, 6, 4, 1, 5; Foung Mua, Sacramento Municipal Utility District, 3, 6, 4, 1, 5; Kevin Smith, Balancing Authority of Northern California, 1; Nicole Looney, Sacramento Municipal Utility District, 3, 6, 4, 1, 5; Ryder Couch, Sacramento Municipal Utility District, 3, 6, 4, 1, 5; Wei Shao, Sacramento Municipal Utility District, 3, 6, 4, 1, 5; - Tim Kelley, Group Name SMUD and BANC	
Answer	Yes
Document Name	
Comment	
Likes 0	
Dislikes 0	
Response	
Thank you for your support.	
Donna Wood - Tri-State G and T Association, Inc. - 1	
Answer	Yes
Document Name	
Comment	
Likes 0	
Dislikes 0	
Response	
Thank you for your support.	
Greg Sorenson - Greg Sorenson On Behalf of: Tremayne Brown, ReliabilityFirst , 10; - Greg Sorenson	
Answer	Yes

Document Name	
Comment	
Likes 0	
Dislikes 0	
Response	
Thank you for your support.	
Jodi Yeary - AEP - 3	
Answer	Yes
Document Name	
Comment	
Likes 0	
Dislikes 0	
Response	
Thank you for your support.	
Brian Millard - Tennessee Valley Authority - 1,3,5,6 - SERC, Group Name TVA RBB	
Answer	Yes
Document Name	
Comment	
Likes 0	
Dislikes 0	
Response	

Thank you for your support.	
Phillip Martinez - Phillip Martinez On Behalf of: Richard Jackson, U.S. Bureau of Reclamation, 1, 5; - U.S. Bureau of Reclamation - 1 - WECC	
Answer	Yes
Document Name	
Comment	
Likes 0	
Dislikes 0	
Response	
Thank you for your support.	
Dermot Smyth - Con Ed - Consolidated Edison Co. of New York - 1, Group Name Con Edison	
Answer	Yes
Document Name	
Comment	
Likes 0	
Dislikes 0	
Response	
Thank you for your support.	
Dave Krueger - SERC Reliability Corporation - 10	
Answer	Yes
Document Name	
Comment	

Likes 0	
Dislikes 0	
Response	
Thank you for your support.	
Jason Chandler - Con Ed - Consolidated Edison Co. of New York - 6	
Answer	Yes
Document Name	
Comment	
Likes 0	
Dislikes 0	
Response	
Thank you for your support.	
Wendy Kalidass - U.S. Bureau of Reclamation - 5	
Answer	Yes
Document Name	
Comment	
Likes 0	
Dislikes 0	
Response	
Thank you for your support.	
Lincoln Burton - Con Ed - Consolidated Edison Co. of New York - 3	
Answer	Yes

Document Name	
Comment	
Likes 0	
Dislikes 0	
Response	
Thank you for your support.	
Rachel Coyne - Texas Reliability Entity, Inc. - 10	
Answer	Yes
Document Name	
Comment	
Likes 0	
Dislikes 0	
Response	
Thank you for your support.	
Mark Flanary - Midwest Reliability Organization - 10	
Answer	Yes
Document Name	
Comment	
Likes 0	
Dislikes 0	
Response	

Thank you for your support.	
Michelle Pagano - Con Ed - Consolidated Edison Co. of New York - 5	
Answer	Yes
Document Name	
Comment	
Likes 0	
Dislikes 0	
Response	
Thank you for your support.	
Chris Wagner - Santee Cooper - 1, Group Name Santee Cooper	
Answer	Yes
Document Name	
Comment	
Likes 0	
Dislikes 0	
Response	
Thank you for your support.	
Richard Vendetti - NextEra Energy - 5	
Answer	Yes
Document Name	
Comment	

Likes 0	
Dislikes 0	
Response	
Thank you for your support.	
Carver Powers - Utility Services, Inc. - 4	
Answer	Yes
Document Name	
Comment	
Likes 0	
Dislikes 0	
Response	
Thank you for your support.	
Kelley Sargent - Puget Sound Energy, Inc. - 3	
Answer	Yes
Document Name	
Comment	
Likes 0	
Dislikes 0	
Response	
Thank you for your support.	
Jennie Wike - Jennie Wike On Behalf of: John Merrell, Tacoma Public Utilities (Tacoma, WA), 1, 4, 5, 6, 3; - Jennie Wike, Group Name Tacoma Power	
Answer	Yes

Document Name	
Comment	
Likes 0	
Dislikes 0	
Response	
Thank you for your support.	
Lexi Dobrzysnki - Lexi Dobrzysnki On Behalf of: Angela Dockter, Alliant Energy Corporation Services, Inc., 4; - Lexi Dobrzysnki	
Answer	
Document Name	
Comment	
Alliant Energy mirrors the MRO NSRF group Comments.	
Likes 0	
Dislikes 0	
Response	
Thank you for your feedback. Please see the response to the MRO NSRF's comments.	

6. Do you agree with the Implementation Plan for CIP-014-4? If you think an alternate timeframe is needed, please propose an alternate implementation plan with a detailed explanation.	
Gail Elliott - Gail Elliott On Behalf of: Michael Moltane, International Transmission Company Holdings Corporation, 1; - Gail Elliott	
Answer	No
Document Name	
Comment	
ITC believes there could be issues with identifying all of the proximity stations soon enough to identify their configurations and clearing times soon enough to perform all of the required studies. This is more of an issue as entities add facilities in additional states. The number of coordination agreements could also cause an issue in obtaining all of the required documentation.	
Likes 0	
Dislikes 0	
Response	
Thank you for your comments. Please see revised Requirement R2. The drafting team clarified that R2 only applies to "existing BES" proximate stations.	
Richard Vendetti - NextEra Energy - 5	
Answer	No
Document Name	
Comment	
Nextera supports EEI comments below: EEI is concerned that the implementation plan requires the initial risk assessment required by CIP-014-4 to be completed on or before the effective date of the Standard and does not provide a phased in approach. The modifications required by the proposed CIP-014-4 include new processes to be established prior to initiating new risk assessments. The proposed 24-month timeline is not reasonable for completing	

the initial risk assessment. EEI suggests allowing the initiation of CIP-014-4 risk assessments to occur on or before the effective date of the standard to allow additional time to modify programs.	
Likes 0	
Dislikes 0	
Response	
Thank you for your comments. The initial performance of periodic Requirements is clarified in the Implementation Plan.	
Rebika Yitna - Rebika Yitna On Behalf of: Roger Brand, MEAG Power, 3, 1; - Rebika Yitna	
Answer	No
Document Name	
Comment	
Due to the varying risk assessment schedules of entities, the 24 month implementation plan could burden entities who have completed a risk assessment shortly before the effective date of CIP-014-4 and have limited resources to complete another one in a short amount of time. Proposed language: 36 months from the entity's last risk assessment completed or 36 months after the effective date of the standard, which ever is later. This will provide adequate time for entities to adjust to the additional criteria for the risk assessment methodology.	
Likes 0	
Dislikes 0	
Response	
Thank you for your comments. The initial performance of periodic Requirements is clarified in the Implementation Plan.	
Jamison Cawley - Nebraska Public Power District - 1	
Answer	No
Document Name	
Comment	

The requirements for an unaffiliated third-party verification of the TO's risk assessment should be removed entirely. This requirement has increased the cost, time and resources required for each TO to perform the risk assessment. We have found that the third-party verification is not used by the RE for any compliance enforcement actions. If the third-party verification provides no value to this process, it should not be included in the CIP-014 requirements. If the 36-month RA requirement is approved, this issue will only become more burdensome.	
Likes 1	Nebraska Public Power District, 5, Bender Ronald
Dislikes 0	
Response	
Thank you for your comments. The initial performance of periodic Requirements is clarified in the Implementation Plan.	
Matt Carden - Southern Company - Southern Company Services, Inc. - 1	
Answer	No
Document Name	
Comment	
It potentially could be excessively burdensome on a Transmission Owner (TO) to be required to perform a new risk assessment study within 24 months of the effective implementation date of the revised CIP-014-4 standard. Additionally, limited resources may be available to complete a verification within 90 days of the effective date per Requirement R6. For example, given the current CIP-014-3 R1.1 30 calendar month subsequent risk assessment requirement schedule for a TO which has substations identified under R1, the TO may currently be required to complete a subsequent R1 study as of September 30, 2025. If the revised standard has an effective implementation date of October 1, 2025, the TO would be required to complete a new R1 study within 24 months of October 1, 2025. A more effective and efficient methodology is a phased approach based on the TO's completion date of the TO's most recent R1.1 subsequent risk assessment study. Proposed Language: Each TO shall conduct its first assessment under CIP-014-4 within 36 calendar months after the effective date or within 36 calendar months after their last assessment under CIP-014-3, whichever occurs later.	
Likes 0	

Dislikes 0	
Response	
Thank you for your comment. The initial performance of periodic Requirements is clarified in the Implementation Plan. Based on the industry comments a majority of entities expressed that they need more than 12 months to be ready to comply with CIP-014-4 after applicable government authority approval.	
Jodi Yeary - AEP - 3	
Answer	No
Document Name	
Comment	
The implementation plan accelerates the compliance timeframe specified in the standard. The proposed implementation plan is 24 months. This means some Transmission Owners may have insufficient time, less than 36 months, to complete their next assessment based on the new standard. The implementation plan should be adjusted to 36 months.	
Likes 0	
Dislikes 0	
Response	
Thank you for your comment. The initial performance of periodic Requirements is clarified in the Implementation Plan. Based on the industry comments a majority of entities expressed that they need more than 12 months to be ready to comply with CIP-014-4 after applicable government authority approval.	
Nikki Carson-Marquis - Nikki Carson-Marquis On Behalf of: Theresa Allard, Minnkota Power Cooperative Inc., 1; - Nikki Carson-Marquis	
Answer	No
Document Name	
Comment	

MPC holds the position that requiring completion of a CIP-014-4 risk assessment prior to the effective date of the Standard presents duplicative efforts coupled with limited study resources. MPC suggests that entities with a completed risk assessment per CIP-014-3 be required to follow the new assessment frequency once the Standard becomes effective in accordance with R5.	
Likes 0	
Dislikes 0	
Response	
Thank you for your comment. The initial performance of periodic Requirements is clarified in the Implementation Plan. Based on the industry comments a majority of entities expressed that they need more than 12 months to be ready to comply with CIP-014-4 after applicable government authority approval.	
Mark Garza - FirstEnergy - FirstEnergy Corporation - 4, Group Name FE Voter	
Answer	No
Document Name	
Comment	
Until clarification of R5 pertaining to alignment of dual ownership is made, FirstEnergy cannot support the Implementation Plan.	
Likes 0	
Dislikes 0	
Response	
Thank you for your comments.	
Stephen Stafford - Stephen Stafford On Behalf of: Greg Davis, Georgia Transmission Corporation, 1; - Stephen Stafford	
Answer	No
Document Name	
Comment	

There should be some period of time after the standard becomes effective before the initial risk assessment should be completed. The recommendation is within 24 months following the effective date of this standard.	
Likes 0	
Dislikes 0	
Response	
Thank you for your comment. The initial performance of periodic Requirements is clarified in the Implementation Plan.	
Ronald Hoover - Bonneville Power Administration - 1,3,5,6 - WECC	
Answer	No
Document Name	
Comment	
BPA repeats it recommendation to use terminology like that found in other standards such as FAC-014-3 R6: “Requirement R6 shall be implemented by the Planning Coordinator or Transmission Planner following the effective date of FAC-014-3 when it begins its next cycle for conducting the studies to support its Planning Assessment." BPA believes the inclusion of this language would alleviate concerns about having to comply with a requirement prior to its mandatory enforcement date and help to reduce overall costs for the implementation of the changes.	
Likes 0	
Dislikes 0	
Response	
Thank you for your comment and recommendation. Requirement R6 was approved by the industry in the previous version. It’s out of scope for this project to make changes of applicabilities for R6.	
Melanie Wong - Seminole Electric Cooperative, Inc. - 5	
Answer	No
Document Name	

Comment	
Likes 0	
Dislikes 0	
Response	
Thank you for your feedback.	
Robert Blackney - Edison International - Southern California Edison Company - 1	
Answer	Yes
Document Name	
Comment	
See comments submitted by Edison Electric Institute.	
Likes 0	
Dislikes 0	
Response	
Thank you for your support. Please see responses to the EEI's comments.	
Lucinda Bradshaw - Lucinda Bradshaw On Behalf of: Byron Booker, Oncor Electric Delivery, 1; - Lucinda Bradshaw	
Answer	Yes
Document Name	
Comment	
N/A	
Likes 0	
Dislikes 0	

Response	
Thank you for your support.	
Kristine Martz - Edison Electric Institute - NA - Not Applicable - NA - Not Applicable	
Answer	Yes
Document Name	
Comment	
EEI agrees with the Implementation Plan for CIP-014-4, however, we note that there are additional revisions to CIP-014 that are part of Project 2021-03 to address IROLs. It would be beneficial to align the timelines in the implementation plans for these projects if possible.	
Likes 0	
Dislikes 0	
Response	
Thank you for your support and comments. If IROLs will be changed by other projects, they will also be addressed by other project(s) accordingly in Attachment 1.	
Hillary Creurer - Allete - Minnesota Power, Inc. - 1	
Answer	Yes
Document Name	
Comment	
Minnesota Power supports EEI's comments.	
Likes 0	
Dislikes 0	
Response	
Thank you for your support. Please see responses to the EEI's comments.	
Chris Wagner - Santee Cooper - 1, Group Name Santee Cooper	

Answer	Yes
Document Name	
Comment	
No significant differences from previous draft that require additional comment.	
Likes 0	
Dislikes 0	
Response	
Thank you for your support.	
Selene Willis - Edison International - Southern California Edison Company - 5	
Answer	Yes
Document Name	
Comment	
"Please see EEI Comments"	
Likes 0	
Dislikes 0	
Response	
Thank you for your support. Please see responses to the EEI's comments.	
Nick Leathers - Nick Leathers On Behalf of: David Jendras Sr, Ameren - Ameren Services, 3, 6, 1; - Nick Leathers	
Answer	Yes
Document Name	
Comment	

Ameren agrees with EEI's comments.	
Likes 0	
Dislikes 0	
Response	
Thank you for your support. Please see responses to the EEI's comments.	
Misty Carneal - Duke Energy - 1,3,5,6 - Texas RE,SERC,RF	
Answer	Yes
Document Name	
Comment	
Duke Energy agrees with the Implementation Plan.	
Likes 0	
Dislikes 0	
Response	
Thank you for your support.	
Josh Schumacher - Black Hills Corporation - 6, Group Name Black Hills Corporation Segments 1, 3, 5, 6	
Answer	Yes
Document Name	
Comment	
Black Hills Corporation agrees with the implementation plan for CIP-014-4, but in agreement with EEI, we think it would be beneficial to align the timelines of the implementation plans with the implementation plan for additional changes to CIP-014-4 that are part of Project 2021-03.	
Likes 0	

Dislikes 0	
Response	
Thank you for your support. Please see responses to the EEI's comments.	
Andrew Smith - APS - Arizona Public Service Co. - 5	
Answer	Yes
Document Name	
Comment	
AZPS agrees with the Implementation Plan	
Likes 0	
Dislikes 0	
Response	
Thank you for your support.	
Amy Wilke - American Transmission Company, LLC - 1	
Answer	Yes
Document Name	
Comment	
ATC agrees with MRO NSRF comments.	
Likes 0	
Dislikes 0	
Response	
Thank you for your support. Please see responses to the MRO NSRF's comments.	
Daniel Gacek - Exelon - 1, Group Name Exelon	

Answer	Yes
Document Name	
Comment	
Likes 0	
Dislikes 0	
Response	
Thank you for your support.	
Kennedy Meier - Electric Reliability Council of Texas, Inc. - 2	
Answer	Yes
Document Name	
Comment	
Likes 0	
Dislikes 0	
Response	
Thank you for your support.	
Jennie Wike - Jennie Wike On Behalf of: John Merrell, Tacoma Public Utilities (Tacoma, WA), 1, 4, 5, 6, 3; - Jennie Wike, Group Name Tacoma Power	
Answer	Yes
Document Name	
Comment	
Likes 0	
Dislikes 0	

Response	
Thank you for your support.	
Monika Montez - California ISO - 2 - WECC, Group Name ISO/RTO Council Standards Review Committee (SRC)	
Answer	Yes
Document Name	
Comment	
Likes 0	
Dislikes 0	
Response	
Thank you for your support.	
Kelley Sargent - Puget Sound Energy, Inc. - 3	
Answer	Yes
Document Name	
Comment	
Likes 0	
Dislikes 0	
Response	
Thank you for your support.	
Carver Powers - Utility Services, Inc. - 4	
Answer	Yes
Document Name	
Comment	

Likes 0	
Dislikes 0	
Response	
Thank you for your support.	
Dan Perry - TXNM Energy - 1,3,5 - WECC,Texas RE	
Answer	Yes
Document Name	
Comment	
Likes 0	
Dislikes 0	
Response	
Thank you for your support.	
Wesley Maurer - Lower Colorado River Authority - 1 - Texas RE	
Answer	Yes
Document Name	
Comment	
Likes 0	
Dislikes 0	
Response	
Thank you for your support.	
Joseph Scott - Lower Colorado River Authority - 5	

Answer	Yes
Document Name	
Comment	
Likes 0	
Dislikes 0	
Response	
Thank you for your support.	
Robert Follini - Avista - Avista Corporation - 3	
Answer	Yes
Document Name	
Comment	
Likes 0	
Dislikes 0	
Response	
Thank you for your support.	
Ruida Shu - Northeast Power Coordinating Council - 10, Group Name NPCC RSC	
Answer	Yes
Document Name	
Comment	
Likes 0	
Dislikes 0	

Response	
Thank you for your support.	
Ben Hammer - Western Area Power Administration - 1	
Answer	Yes
Document Name	
Comment	
Likes 0	
Dislikes 0	
Response	
Thank you for your support.	
Michelle Pagano - Con Ed - Consolidated Edison Co. of New York - 5	
Answer	Yes
Document Name	
Comment	
Likes 0	
Dislikes 0	
Response	
Thank you for your support.	
Zahid Qayyum - New York Power Authority - 5	
Answer	Yes
Document Name	
Comment	

Likes 0	
Dislikes 0	
Response	
Thank you for your support.	
Mark Flanary - Midwest Reliability Organization - 10	
Answer	Yes
Document Name	
Comment	
Likes 0	
Dislikes 0	
Response	
Thank you for your support.	
Timothy Singh - Timothy Singh On Behalf of: Israel Perez, Salt River Project, 3, 6, 5, 1; Laura Somak, Salt River Project, 3, 6, 5, 1; Mathew Weber, Salt River Project, 3, 6, 5, 1; Matthew Jaramilla, Salt River Project, 3, 6, 5, 1; - Timothy Singh	
Answer	Yes
Document Name	
Comment	
Likes 0	
Dislikes 0	
Response	
Thank you for your support.	

Alan Kloster - Alan Kloster On Behalf of: Jeremy Harris, Evergy, 3, 5, 1, 6; Kevin Frick, Evergy, 3, 5, 1, 6; Marcus Moor, Evergy, 3, 5, 1, 6; Tiffany Lake, Evergy, 3, 5, 1, 6; - Alan Kloster	
Answer	Yes
Document Name	
Comment	
Likes 0	
Dislikes 0	
Response	
Thank you for your support.	
Lincoln Burton - Con Ed - Consolidated Edison Co. of New York - 3	
Answer	Yes
Document Name	
Comment	
Likes 0	
Dislikes 0	
Response	
Thank you for your support.	
Chantal Mazza - Chantal Mazza On Behalf of: Junji Yamaguchi, Hydro-Quebec (HQ), 1, 5; Nicolas Turcotte, Hydro-Quebec (HQ), 1, 5; - Chantal Mazza	
Answer	Yes
Document Name	
Comment	

Likes 0	
Dislikes 0	
Response	
Thank you for your support.	
Wendy Kalidass - U.S. Bureau of Reclamation - 5	
Answer	Yes
Document Name	
Comment	
Likes 0	
Dislikes 0	
Response	
Thank you for your support.	
Jason Chandler - Con Ed - Consolidated Edison Co. of New York - 6	
Answer	Yes
Document Name	
Comment	
Likes 0	
Dislikes 0	
Response	
Thank you for your support.	
Steven Belle - Dominion - Dominion Virginia Power - 1	
Answer	Yes

Document Name	
Comment	
Likes 0	
Dislikes 0	
Response	
Thank you for your support.	
Dave Krueger - SERC Reliability Corporation - 10	
Answer	Yes
Document Name	
Comment	
Likes 0	
Dislikes 0	
Response	
Thank you for your support.	
Dermot Smyth - Con Ed - Consolidated Edison Co. of New York - 1, Group Name Con Edison	
Answer	Yes
Document Name	
Comment	
Likes 0	
Dislikes 0	
Response	

Thank you for your support.	
Phillip Martinez - Phillip Martinez On Behalf of: Richard Jackson, U.S. Bureau of Reclamation, 1, 5; - U.S. Bureau of Reclamation - 1 - WECC	
Answer	Yes
Document Name	
Comment	
Likes 0	
Dislikes 0	
Response	
Thank you for your support.	
Brian Millard - Tennessee Valley Authority - 1,3,5,6 - SERC, Group Name TVA RBB	
Answer	Yes
Document Name	
Comment	
Likes 0	
Dislikes 0	
Response	
Thank you for your support.	
Isidoro Behar - Long Island Power Authority - 1	
Answer	Yes
Document Name	
Comment	

Likes 0	
Dislikes 0	
Response	
Thank you for your support.	
David Melanson - NB Power Corporation - New Brunswick Power Transmission Corporation - 5	
Answer	Yes
Document Name	
Comment	
Likes 0	
Dislikes 0	
Response	
Thank you for your support.	
Bob Cardle - Bob Cardle On Behalf of: Marco Rios, Pacific Gas and Electric Company, 3, 1, 5; Sandra Ellis, Pacific Gas and Electric Company, 3, 1, 5; Tyler Brun, Pacific Gas and Electric Company, 3, 1, 5; - Bob Cardle	
Answer	Yes
Document Name	
Comment	
Likes 0	
Dislikes 0	
Response	
Thank you for your support.	
Randy Peters - Manitoba Hydro - 1,3,5,6 - MRO	
Answer	Yes

Document Name	
Comment	
Likes 0	
Dislikes 0	
Response	
Thank you for your support.	
Greg Sorenson - Greg Sorenson On Behalf of: Tremayne Brown, ReliabilityFirst , 10; - Greg Sorenson	
Answer	Yes
Document Name	
Comment	
Likes 0	
Dislikes 0	
Response	
Thank you for your support.	
Donna Wood - Tri-State G and T Association, Inc. - 1	
Answer	Yes
Document Name	
Comment	
Likes 0	
Dislikes 0	
Response	

Thank you for your support.	
Tim Kelley - Tim Kelley On Behalf of: Charles Norton, Sacramento Municipal Utility District, 3, 6, 4, 1, 5; Foung Mua, Sacramento Municipal Utility District, 3, 6, 4, 1, 5; Kevin Smith, Balancing Authority of Northern California, 1; Nicole Looney, Sacramento Municipal Utility District, 3, 6, 4, 1, 5; Ryder Couch, Sacramento Municipal Utility District, 3, 6, 4, 1, 5; Wei Shao, Sacramento Municipal Utility District, 3, 6, 4, 1, 5; - Tim Kelley, Group Name SMUD and BANC	
Answer	Yes
Document Name	
Comment	
Likes 0	
Dislikes 0	
Response	
Thank you for your support.	
Darko Kovac, P.E. - Gainesville Regional Utilities - 1,3,5	
Answer	Yes
Document Name	
Comment	
Likes 0	
Dislikes 0	
Response	
Thank you for your support.	
Thomas Breen - Berkshire Hathaway Energy - MidAmerican Energy Co. - 1	
Answer	Yes
Document Name	

Comment	
Likes 0	
Dislikes 0	
Response	
Thank you for your support.	
Jessica Cordero - Unisource - Tucson Electric Power Co. - 1	
Answer	Yes
Document Name	
Comment	
Likes 0	
Dislikes 0	
Response	
Thank you for your support.	
James Keele - Entergy - 3	
Answer	Yes
Document Name	
Comment	
Likes 0	
Dislikes 0	
Response	
Thank you for your support.	

Amy Key - Berkshire Hathaway Energy - MidAmerican Energy Co. - 3	
Answer	Yes
Document Name	
Comment	
Likes 0	
Dislikes 0	
Response	
Thank you for your support.	
Anna Martinson - MRO - 1,2,3,4,5,6 - MRO, Group Name MRO Group	
Answer	Yes
Document Name	
Comment	
Likes 0	
Dislikes 0	
Response	
Thank you for your support.	
Tamarra Hardie - Public Utility District No. 1 of Chelan County - 6, Group Name CHPD	
Answer	Yes
Document Name	
Comment	
Likes 0	

Dislikes 0	
Response	
Thank you for your support.	
Jeffrey Streifling - NB Power Corporation - 1	
Answer	Yes
Document Name	
Comment	
Likes 0	
Dislikes 0	
Response	
Thank you for your support.	
Kevin Conway - Western Power Pool - 4	
Answer	Yes
Document Name	
Comment	
Likes 0	
Dislikes 0	
Response	
Thank you for your support.	
Sean Steffensen - IDACORP - Idaho Power Company - 1	
Answer	Yes
Document Name	

Comment	
Likes 0	
Dislikes 0	
Response	
Thank you for your support.	
Alison Nickells - NiSource - Northern Indiana Public Service Co. - 1	
Answer	Yes
Document Name	
Comment	
Likes 0	
Dislikes 0	
Response	
Thank you for your support.	
Rachel Coyne - Texas Reliability Entity, Inc. - 10	
Answer	
Document Name	
Comment	
Texas RE noticed the retirement date section refers to CIP-014 and it should refer to CIP-014-4.	
Likes 0	
Dislikes 0	
Response	

Thank you for your comment. “-4” was added to “CIP-014”.	
Lexi Dobrzysnki - Lexi Dobrzysnki On Behalf of: Angela Dockter, Alliant Energy Corporation Services, Inc., 4; - Lexi Dobrzysnki	
Answer	
Document Name	
Comment	
Alliant Energy mirrors the MRO NSRF group Comments.	
Likes 0	
Dislikes 0	
Response	
Thank you for your comment. Please see response to the MRO NSRF’s comments.	

7. Do you believe there are alternatives or more cost-effective options to address the recommendations in CIP-014-4 to address the reliability issue of physical security? If so, please provide your recommendation and, if appropriate, technical, or procedural justification.	
Jeffrey Streifling - NB Power Corporation - 1	
Answer	No
Document Name	
Comment	
TFIST has a concern with multiple pending standards may overlap due to the delayed approval process may cause increased cost on entities due to multiple implementation plans occurring at the same time.	
Likes 0	
Dislikes 0	
Response	
Thank you for the comment. The drafting team balanced concerns regarding the burden on applicable Transmission Owners and the benefits to reliability from identifying and physically protecting those Transmission stations, Transmission substations, and their associated primary control centers that are critical to the reliable and secure operation of the BPS.	
Anna Martinson - MRO - 1,2,3,4,5,6 - MRO, Group Name MRO Group	
Answer	No
Document Name	
Comment	
MRO NSRF does not have any alternatives to propose.	
Likes 0	
Dislikes 0	

Response	
Thank you for the comment.	
Amy Key - Berkshire Hathaway Energy - MidAmerican Energy Co. - 3	
Answer	No
Document Name	
Comment	
MEC supports the comments of the MRO NSRF	
Likes 0	
Dislikes 0	
Response	
Thank you for the comment. Please see responses to the MRO NSRF's comments.	
Amy Wilke - American Transmission Company, LLC - 1	
Answer	No
Document Name	
Comment	
ATC agrees with MRO NSRF comments.	
Likes 0	
Dislikes 0	
Response	
Thank you for the comment. Please see responses to the MRO NSRF's comments.	
Mark Garza - FirstEnergy - FirstEnergy Corporation - 4, Group Name FE Voter	
Answer	No

Document Name	
Comment	
No comments toward cost effectiveness.	
Likes 0	
Dislikes 0	
Response	
Thank you for your feedback.	
David Melanson - NB Power Corporation - New Brunswick Power Transmission Corporation - 5	
Answer	No
Document Name	
Comment	
NB Power supports NPCCs comments: "NPCC RSC is concerned that multiple pending standards may overlap due to delays in the approval process. This could lead to increased costs for entities, as they may be required to implement multiple standards simultaneously. For example, we are particularly concerned about CIP-014 and CIP-002 becoming misaligned or out of sync."	
Likes 0	
Dislikes 0	
Response	
Thank you for the comment. The drafting team balanced concerns regarding the burden on applicable Transmission Owners and the benefits to reliability from identifying and physically protecting those Transmission stations, Transmission substations, and their associated primary control centers that are critical to the reliable and secure operation of the BPS.	
Matt Carden - Southern Company - Southern Company Services, Inc. - 1	
Answer	No

Document Name	
Comment	
Southern Company recognizes the financial impacts of performing the risk assessment every 36 months rather than 60 months for Transmission Owners that have not identified any Transmission stations or Transmission substations. This is magnified by the requirement to have an unaffiliated third party verify the risk assessment at a higher frequency.	
Likes 0	
Dislikes 0	
Response	
Thank you for the comment. The drafting team balanced concerns regarding the burden on applicable Transmission Owners and the benefits to reliability from identifying and physically protecting those Transmission stations, Transmission substations, and their associated primary control centers that are critical to the reliable and secure operation of the BPS.	
Chantal Mazza - Chantal Mazza On Behalf of: Junji Yamaguchi, Hydro-Quebec (HQ), 1, 5; Nicolas Turcotte, Hydro-Quebec (HQ), 1, 5; - Chantal Mazza	
Answer	No
Document Name	
Comment	
NPCC RSC is concerned that multiple pending standards may overlap due to delays in the approval process. This could lead to increased costs for entities, as they may be required to implement multiple standards simultaneously. For example, we are particularly concerned about CIP-014 and CIP-002 becoming misaligned or out of sync.	
Likes 0	
Dislikes 0	
Response	

Thank you for the comment. The drafting team balanced concerns regarding the burden on applicable Transmission Owners and the benefits to reliability from identifying and physically protecting those Transmission stations, Transmission substations, and their associated primary control centers that are critical to the reliable and secure operation of the BPS.	
Zahid Qayyum - New York Power Authority - 5	
Answer	No
Document Name	
Comment	
NYPA supports NPCC RSC comments.	
Likes 0	
Dislikes 0	
Response	
Thank you for the comment. Please see responses to the NPCC RSC comments.	
Ruida Shu - Northeast Power Coordinating Council - 10, Group Name NPCC RSC	
Answer	No
Document Name	
Comment	
NPCC RSC is concerned that multiple pending standards may overlap due to delays in the approval process. This could lead to increased costs for entities, as they may be required to implement multiple standards simultaneously. For example, we are particularly concerned about CIP-014 and CIP-002 becoming misaligned or out of sync.	
Likes 0	
Dislikes 0	
Response	

Thank you for the comment. The drafting team balanced concerns regarding the burden on applicable Transmission Owners and the benefits to reliability from identifying and physically protecting those Transmission stations, Transmission substations, and their associated primary control centers that are critical to the reliable and secure operation of the BPS.	
Lucinda Bradshaw - Lucinda Bradshaw On Behalf of: Byron Booker, Oncor Electric Delivery, 1; - Lucinda Bradshaw	
Answer	No
Document Name	
Comment	
The comments above demonstrate that additional clarity is needed on certain portions of this revised CIP-014-4. Without that additional clarity, Oncor cannot state that the proposed changes to CIP-014-3 are cost effective. As noted above, some of the proposed revisions create additional work for TOs that could increase the TOs' costs. For example, the revised Requirements R2 and R4 will require Oncor to develop, document, and implement new procedures and processes, as well as to develop and implement additional training concerning the new requirements and the new procedures and processes.	
Likes 0	
Dislikes 0	
Response	
Thank you for your comments. Requirements R2 and R4 are part of the workscope from the SAR. They are necessary for reducing reliability gaps. The drafting team balanced concerns regarding the burden on applicable Transmission Owners and the benefits to reliability from identifying and physically protecting those Transmission stations, Transmission substations, and their associated primary control centers that are critical to the reliable and secure operation of the BPS.	
Alison Nickells - NiSource - Northern Indiana Public Service Co. - 1	
Answer	No
Document Name	
Comment	
Likes 0	
Dislikes 0	

Response	
Thank you for your feedback.	
Sean Steffensen - IDACORP - Idaho Power Company - 1	
Answer	No
Document Name	
Comment	
Likes 0	
Dislikes 0	
Response	
Thank you for your feedback.	
Kevin Conway - Western Power Pool - 4	
Answer	No
Document Name	
Comment	
Likes 0	
Dislikes 0	
Response	
Thank you for your feedback.	
Thomas Breen - Berkshire Hathaway Energy - MidAmerican Energy Co. - 1	
Answer	No
Document Name	
Comment	

Likes 0	
Dislikes 0	
Response	
Thank you for your feedback.	
Tim Kelley - Tim Kelley On Behalf of: Charles Norton, Sacramento Municipal Utility District, 3, 6, 4, 1, 5; Foung Mua, Sacramento Municipal Utility District, 3, 6, 4, 1, 5; Kevin Smith, Balancing Authority of Northern California, 1; Nicole Looney, Sacramento Municipal Utility District, 3, 6, 4, 1, 5; Ryder Couch, Sacramento Municipal Utility District, 3, 6, 4, 1, 5; Wei Shao, Sacramento Municipal Utility District, 3, 6, 4, 1, 5; - Tim Kelley, Group Name SMUD and BANC	
Answer	No
Document Name	
Comment	
Likes 0	
Dislikes 0	
Response	
Thank you for your feedback.	
Greg Sorenson - Greg Sorenson On Behalf of: Tremayne Brown, ReliabilityFirst , 10; - Greg Sorenson	
Answer	No
Document Name	
Comment	
Likes 0	
Dislikes 0	
Response	

Thank you for your feedback.	
Andrew Smith - APS - Arizona Public Service Co. - 5	
Answer	No
Document Name	
Comment	
Likes 0	
Dislikes 0	
Response	
Thank you for your feedback.	
Randy Peters - Manitoba Hydro - 1,3,5,6 - MRO	
Answer	No
Document Name	
Comment	
Likes 0	
Dislikes 0	
Response	
Thank you for your feedback.	
Phillip Martinez - Phillip Martinez On Behalf of: Richard Jackson, U.S. Bureau of Reclamation, 1, 5; - U.S. Bureau of Reclamation - 1 - WECC	
Answer	No
Document Name	
Comment	

Likes 0	
Dislikes 0	
Response	
Thank you for your feedback.	
Dermot Smyth - Con Ed - Consolidated Edison Co. of New York - 1, Group Name Con Edison	
Answer	No
Document Name	
Comment	
Likes 0	
Dislikes 0	
Response	
Thank you for your feedback.	
Dave Krueger - SERC Reliability Corporation - 10	
Answer	No
Document Name	
Comment	
Likes 0	
Dislikes 0	
Response	
Thank you for your feedback.	
Jason Chandler - Con Ed - Consolidated Edison Co. of New York - 6	
Answer	No

Document Name	
Comment	
Likes 0	
Dislikes 0	
Response	
Thank you for your feedback.	
Wendy Kalidass - U.S. Bureau of Reclamation - 5	
Answer	No
Document Name	
Comment	
Likes 0	
Dislikes 0	
Response	
Thank you for your feedback.	
Lincoln Burton - Con Ed - Consolidated Edison Co. of New York - 3	
Answer	No
Document Name	
Comment	
Likes 0	
Dislikes 0	
Response	

Thank you for your feedback.	
Timothy Singh - Timothy Singh On Behalf of: Israel Perez, Salt River Project, 3, 6, 5, 1; Laura Somak, Salt River Project, 3, 6, 5, 1; Mathew Weber, Salt River Project, 3, 6, 5, 1; Matthew Jaramilla, Salt River Project, 3, 6, 5, 1; - Timothy Singh	
Answer	No
Document Name	
Comment	
Likes 0	
Dislikes 0	
Response	
Thank you for your feedback.	
Michelle Pagano - Con Ed - Consolidated Edison Co. of New York - 5	
Answer	No
Document Name	
Comment	
Likes 0	
Dislikes 0	
Response	
Thank you for your feedback.	
Rebika Yitna - Rebika Yitna On Behalf of: Roger Brand, MEAG Power, 3, 1; - Rebika Yitna	
Answer	No
Document Name	
Comment	

Likes 0	
Dislikes 0	
Response	
Thank you for your feedback.	
Ben Hammer - Western Area Power Administration - 1	
Answer	No
Document Name	
Comment	
Likes 0	
Dislikes 0	
Response	
Thank you for your feedback.	
Robert Follini - Avista - Avista Corporation - 3	
Answer	No
Document Name	
Comment	
Likes 0	
Dislikes 0	
Response	
Thank you for your feedback.	
Hillary Creurer - Allete - Minnesota Power, Inc. - 1	
Answer	No

Document Name	
Comment	
Likes 0	
Dislikes 0	
Response	
Thank you for your feedback.	
Dan Perry - TXNM Energy - 1,3,5 - WECC,Texas RE	
Answer	No
Document Name	
Comment	
Likes 0	
Dislikes 0	
Response	
Thank you for your feedback.	
Melanie Wong - Seminole Electric Cooperative, Inc. - 5	
Answer	No
Document Name	
Comment	
Likes 0	
Dislikes 0	
Response	

Thank you for your feedback.	
Ronald Hoover - Bonneville Power Administration - 1,3,5,6 - WECC	
Answer	Yes
Document Name	
Comment	
BPA does not believe the standard, as is, is cost effective in addressing the reliability of physical security. The spectrum of sites is too broad. BPA believes there is high potential for sites to be identified on CIP-014-4 list that would have little to no effect on the BES if they were disconnected from the grid. The standard, as is, allows sites with RAS capability to be listed as CIP-014, which mitigates an enormous amount of risk, some might argue all. The number of sites that could potentially be categorized as CIP-14 takes resources away from other sites along critical pathways, and sites that directly link to critical infrastructure. Additionally, day-to-day operations of upstream and downstream sites affect whether singular or multiple pieces of equipment in a site are critical. BPA finds the inclusions of R2.1 and R2.2 are so broad as to compound the issues of cost without a large gain in security or reliability. BPA believes the increase in CIP-014 applicability may require more resources than some smaller Transmission Owners have at their disposal. This increase will not only strain the resources of those smaller Transmission Owners but those of larger size within a BA that may be called upon to assist.	
Likes 0	
Dislikes 0	
Response	
Thank you for the comment. Sub-Requirements R2.1 and 2.2 were removed from the previous draft.	
Tamarra Hardie - Public Utility District No. 1 of Chelan County - 6, Group Name CHPD	
Answer	Yes
Document Name	
Comment	
Please see comments provided for R2. More technical guidance from NERC on damage distances for a variety of bomb treat types is desired and modifying the distance requirement in R2 to be based upon technically-supported damage distances rather than personnel evacuation mandates is recommended. Additionally in R2, allowing utilities the flexibility to provide rationale in their CIP-014 assessments	

for why any identified proximate stations within the provided distance should be excluded or if any different distances are used would lead to more realistic physical security scenarios being assessed and reduce the cost-burden of assessing scenarios that are beyond reasonable damage distances.	
Likes 0	
Dislikes 0	
Response	
Thank you for the comment. The drafting team balanced concerns regarding the burden on applicable Transmission Owners and the benefits to reliability from identifying and physically protecting those Transmission stations, Transmission substations, and their associated primary control centers that are critical to the reliable and secure operation of the BPS.	
Stephen Stafford - Stephen Stafford On Behalf of: Greg Davis, Georgia Transmission Corporation, 1; - Stephen Stafford	
Answer	Yes
Document Name	
Comment	
Currently, CIP-014 requires Transmission Owners to conduct planning analyses, and then have these analyses reviewed by a third party verifier. Requirement 6.1 states the the third party verifier must be a registered Planning Coordinator, Transmission Planner, Reliability Coordinator, or have transmission planning or analysis experience. The TO is not the appropriate registered entity to conduct planning analyses. Our understanding is that this is the reason why the standard requires a third party verification by a PC, TP, or RC. Apparently, NERC agrees that the analysis is best suited for the PC, TP or RC function. Furthermore, the fact that the standard is being revised to assure an adequate and consistent approach in evaluating instability as well as the identification of infrastructure critical to the operation of the BPS, supports the premise that the TO-performed study followed by verification by an unaffiliated third party is not a sufficient method. The better method would be to have an affiliated TP or PC to conduct the analysis. It is not cost effective to require the TO to conduct a planning study and then pay an unaffiliated third party to review the study. This is especially true if the TO is also a registered TP or PC. The TP and PC are the best qualified to conduct such studies. Furthermore, since CIP-014 is being revised to be more prescriptive regarding what should be included in the study methodology, the need for third party verification is significantly decreased. GTC recommends that requirement to perform such an analysis be assigned to the TP or PC functions within the TPL group of standards.	

Likes 0	
Dislikes 0	
Response	
Thank you for your comments. Third-part verification is approved by the industry from previous version. It's out of scope for this project.	
Nikki Carson-Marquis - Nikki Carson-Marquis On Behalf of: Theresa Allard, Minnkota Power Cooperative Inc., 1; - Nikki Carson-Marquis	
Answer	Yes
Document Name	
Comment	
Rather than requiring Transmission Owners without identified applicable Transmission stations/substations to perform a risk assessment every 36 months, it would be much more cost effective to allow utilities without critical (sub)stations to continue to perform the risk assessment every 60 months. The concern that a 60 month assessment may not include all planned facilities before the subsequent risk assessment is performed 60 months later could be allayed by changing the requirement to include facilities planned to be in service within the next 60 months rather than the next 24 months as required in CIP-014-3.	
Likes 0	
Dislikes 0	
Response	
Thank you for your comments. One of the work scopes from the SAR is to correct any discrepancies between the study period, frequency of study, and the base case(s) a Transmission Owner uses. The drafting team believes that 36 calendar months is a long time, even for utilities who never had critical (sub)stations.	
Jodi Yeary - AEP - 3	
Answer	Yes
Document Name	
Comment	

Yes. While this SAR focused on modification to R1, the standard could meet the intent of the original FERC order in a more cost effective manner by modifying subsequent requirements to allow for Transmission system reinforcement that would reduce the impact of damage to a Transmission station on the Interconnection as an alternative solution to physical security protections.	
Likes 0	
Dislikes 0	
Response	
Thank you for the comment. The drafting team balanced concerns regarding the burden on applicable Transmission Owners and the benefits to reliability from identifying and physically protecting those Transmission stations, Transmission substations, and their associated primary control centers that are critical to the reliable and secure operation of the BPS.	
Misty Carneal - Duke Energy - 1,3,5,6 - Texas RE,SERC,RF	
Answer	Yes
Document Name	
Comment	
Duke Energy does not have any additional comments.	
Likes 0	
Dislikes 0	
Response	
Thank you for your feedback.	
Jamison Cawley - Nebraska Public Power District - 1	
Answer	Yes
Document Name	
Comment	

All of the extreme critical fault scenarios are already being evaluated under the TPL-001 standard which has clear definitions of how, where, what and why. This CIP-014 standard requires undocumented and undefined requirements be included in the risk assessment, which does not satisfy the original intent of the Physical Security Standard. If we want to increase physical security at BES substations, a clear bright line criteria should be established based on kV level and number of interconnections like other CIP standards. Inclusion of vague risk assessment criteria wastes valuable resources which could better be spent focusing on the transmission planning system performance and development of a more robust grid which is not susceptible to the loss of any single applicable substation.

Likes 1	Nebraska Public Power District, 5, Bender Ronald
Dislikes 0	

Response

Thank you for the comment. The drafting team balanced concerns regarding the burden on applicable Transmission Owners and the benefits to reliability from identifying and physically protecting those Transmission stations, Transmission substations, and their associated primary control centers that are critical to the reliable and secure operation of the BPS.

Joseph Scott - Lower Colorado River Authority - 5

Answer	Yes
Document Name	

Comment

An alternative could be requiring a certain level of security be applied consistently across BES substations (i.e., not limited to CIP-014 substations).

These basic requirements could include: 1) security-grade perimeter fencing 2) remote surveillance via motion-sensing video cameras, and 3) local measures such as motion sensor-activated lighting and break-in audible alarms.

When applied at new substations or as these are improved over time, the incremental cost is not significant and supports a hardened system at a broader level.

Likes 0	
Dislikes 0	

Response	
Thank you for the comment. The drafting team balanced concerns regarding the burden on applicable Transmission Owners and the benefits to reliability from identifying and physically protecting those Transmission stations, Transmission substations, and their associated primary control centers that are critical to the reliable and secure operation of the BPS.	
Gail Elliott - Gail Elliott On Behalf of: Michael Moltane, International Transmission Company Holdings Corporation, 1; - Gail Elliott	
Answer	Yes
Document Name	
Comment	
The requirement for documentation is not cost effective. Requiring all entities to provide this documentation for historic stations is an administrative burden. This requirement should only be applicable to those entities who failed to perform a risk assessment for a joint station.	
Likes 0	
Dislikes 0	
Response	
Thank you for the comment. The drafting team balanced concerns regarding the burden on applicable Transmission Owners and the benefits to reliability from identifying and physically protecting those Transmission stations, Transmission substations, and their associated primary control centers that are critical to the reliable and secure operation of the BPS.	
Emma Halilovic - Hydro One Networks, Inc. - 1	
Answer	Yes
Document Name	2023-06 Draft_3_Comment_Form.docx
Comment	
The alternatives and cost-effective options are outlined in the attached. Overall Strategy for the Standard that meets objectives:	

Identification steps:

- List 1 – stations that meet Attachment 1 criteria, R1
- List 2 – filtering of List 1 with Electrical performance testing, new R2
- List 3 – filtering of List 2 with a nearby (proximate?) potential physical threat assessment, new R3

Results:

- A refined list of stations
- Deploy enhanced physical security at these stations
- Develop policies such as setbacks to reduce future potential physical threats.

Benefits:

- Cost-effective way to better address the intents of a physical security standard as it relates to performance of the bulk electricity system.
- Promote more consistent methodologies among various transmission owners
- Involves the RC to aid in the intersection (overlap) of system criticality and identification of physical threats as the RC has a system-wide view whereas some Transmission Owners may not.

Likes 0	
Dislikes 0	

Response

Thank you for the comment. The drafting team balanced concerns regarding the burden on applicable Transmission Owners and the benefits to reliability from identifying and physically protecting those Transmission stations, Transmission substations, and their associated primary control centers that are critical to the reliable and secure operation of the BPS.

Daniel Gacek - Exelon - 1, Group Name Exelon	
Answer	Yes
Document Name	
Comment	
As stated in our response to Questions 3 & 5: To reduce the burden on smaller TOs of developing an R3 methodology and performing the R5 planning studies, consider providing an option for entities to use the list of transmission stations or substations obtained from the Attachment 1 analysis, as the input to R7 for primary control center determination, and as the input to R8 to begin the physical attack evaluation. Attachment 1 would therefore be an option as the R3 methodology that would then be applied in R5. R4 would still be required. The R6 third party review would be limited to a review of the Attachment 1 analysis.	
Likes 0	
Dislikes 0	
Response	
Thank you for the comment and recommendation. Requirement R6 was approved by the industry and is out of scope for this project. The drafting team balanced concerns regarding the burden on applicable Transmission Owners and the benefits to reliability from identifying and physically protecting those Transmission stations, Transmission substations, and their associated primary control centers that are critical to the reliable and secure operation of the BPS.	
James Keele - Entergy - 3	
Answer	Yes
Document Name	
Comment	
Likes 0	
Dislikes 0	
Response	

Thank you for your feedback.	
Darko Kovac, P.E. - Gainesville Regional Utilities - 1,3,5	
Answer	Yes
Document Name	
Comment	
Likes 0	
Dislikes 0	
Response	
Thank you for your feedback.	
Wesley Maurer - Lower Colorado River Authority - 1 - Texas RE	
Answer	Yes
Document Name	
Comment	
Likes 0	
Dislikes 0	
Response	
Thank you for your feedback.	
Carver Powers - Utility Services, Inc. - 4	
Answer	Yes
Document Name	
Comment	

Likes 0	
Dislikes 0	
Response	
Thank you for your feedback.	
Jennie Wike - Jennie Wike On Behalf of: John Merrell, Tacoma Public Utilities (Tacoma, WA), 1, 4, 5, 6, 3; - Jennie Wike, Group Name Tacoma Power	
Answer	Yes
Document Name	
Comment	
Likes 0	
Dislikes 0	
Response	
Thank you for your feedback.	
Lexi Dobrzysnki - Lexi Dobrzysnki On Behalf of: Angela Dockter, Alliant Energy Corporation Services, Inc., 4; - Lexi Dobrzysnki	
Answer	
Document Name	
Comment	
Alliant Energy mirrors the MRO NSRF group Comments.	
Likes 0	
Dislikes 0	
Response	
Thank you for your comments. Please see responses to the MRO NSRF group Comments.	
Donna Wood - Tri-State G and T Association, Inc. - 1	

Answer	
Document Name	
Comment	
NA	
Likes 0	
Dislikes 0	
Response	
Thank you.	
Bob Cardle - Bob Cardle On Behalf of: Marco Rios, Pacific Gas and Electric Company, 3, 1, 5; Sandra Ellis, Pacific Gas and Electric Company, 3, 1, 5; Tyler Brun, Pacific Gas and Electric Company, 3, 1, 5; - Bob Cardle	
Answer	
Document Name	
Comment	
PGAE does not comment on cost effectiveness.	
Likes 0	
Dislikes 0	
Response	
Thank you for your feedback.	
Josh Schumacher - Black Hills Corporation - 6, Group Name Black Hills Corporation Segments 1, 3, 5, 6	
Answer	
Document Name	
Comment	

Black Hills Corporation will not comment on cost effectiveness.	
Likes 0	
Dislikes 0	
Response	
Thank you for your feedback.	
Nick Leathers - Nick Leathers On Behalf of: David Jendras Sr, Ameren - Ameren Services, 3, 6, 1; - Nick Leathers	
Answer	
Document Name	
Comment	
Ameren will not comment on the cost effectiveness of the project.	
Likes 0	
Dislikes 0	
Response	
Thank you for your feedback.	
Kristine Martz - Edison Electric Institute - NA - Not Applicable - NA - Not Applicable	
Answer	
Document Name	
Comment	
EEI does not comment on cost.	
Likes 0	
Dislikes 0	

Response
Thank you for your feedback.

8. Provide any additional comments for the Drafting Team to consider, if desired.	
Emma Halilovic - Hydro One Networks, Inc. - 1	
Answer	
Document Name	2023-06 Draft_3_Comment_Form.docx
Comment	
System-wide performance evaluation is the accountability of the Reliability Coordinators. Therefore, if the standard must have system-wide (Interconnection) performance testing and judgement of results, the RC must be involved. Not every facility owner will be able to do this. The standard should be practical to implement. See attached for comments.	
Likes 0	
Dislikes 0	
Response	
Thank you for your comments. Per SAR workscopes, coordination has to be made. Please see revised Requirement R3 for assessment criteria. Associated Technical Rationale document explains technically justified thresholds identifying unacceptable generation and load loss within an Interconnection.	
Kennedy Meier - Electric Reliability Council of Texas, Inc. - 2	
Answer	
Document Name	
Comment	
ERCOT joins the comments submitted by the IRC SRC and adopts them as its own.	
Likes 0	
Dislikes 0	

Response	
Thank you for your comment. Please see responses to the IRC SRC's comments.	
Usama Tahir - Seminole Electric Cooperative, Inc. - 3	
Answer	
Document Name	
Comment	
Seminole Electric Cooperative would like clarification on: 1. In Attachment 1 – Applicability Criteria, If a generator has a Collector bus, but the collector bus also serves as a Transmission Facility, how is it classified? Is it classified as a collector bus or Transmission Facility? 2. How to classify a transmission station/substation that has one line that exits, has a tap half a mile out for example, then goes to two separate Transmission Facilities? How do we count the weight of the transmission station/substation that has one line exiting but it systematically connected to two Transmission Facilities? 3. In requirement R2, are proximate Transmission stations in scope even if they are not BES?	
Likes 0	
Dislikes 0	
Response	
Thank you for your comments. If a collector bus serves more than a collector bus, then it is not a collector bus any more. Each Transmission Facility should be assessed separately. Only counts the lines connected to the Facility. Please see revised Requirement R2. Proximate stations only apply to BES thansmission stations.	
Melanie Wong - Seminole Electric Cooperative, Inc. - 5	
Answer	

Document Name	
Comment	
Seminole Electric Cooperative would like clarification on: 1. In Attachment 1 – Applicability Criteria, If a generator has a Collector bus, but the collector bus also serves as a Transmission Facility, how is it classified? Is it classified as a collector bus or Transmission Facility? 2.. How to classify a transmission station/substation that has one line that exits, has a tap half a mile out for example, then goes to two separate Transmission Facilities? How do we count the weight of the transmission station/substation that has one line exiting but it systematically connected to two Transmission Facilities? 3. In requirement R2, are proximate Transmission stations in scope even if they are not BES?	
Likes 0	
Dislikes 0	
Response	
Thank you for your comments. If a collector bus serves more than a collector bus, then it is not a collector bus any more. Each Transmission Facility should be assessed separately. Only counts the lines connected to the Facility. Please see revised Requirement R2. Proximate stations only apply to BES thansmission stations.	
Monika Montez - California ISO - 2 - WECC, Group Name ISO/RTO Council Standards Review Committee (SRC)	
Answer	
Document Name	
Comment	
The ISO/RTO Council (IRC) Standards Review Committee (SRC) notes that Criterion 3 in Attachment 1 references Facilities identified by the Planning Coordinator as critical to the derivation of an Interconnection Reliability Operating Limit (IROL). However, under FAC-014-3,	

Planning Coordinators no longer develop IROLs. The SRC recommends that criterion 3 be updated accordingly to remove the reference to the Planning Coordinator.

The SRC also recommends that the drafting team revise the Technical Rationale to indicate whether the unaffiliated third-party validation under Requirement R6 requires the third party to validate the risk assessments completed in accordance with both Requirements R1 and R2 or just Requirement R1. The current Technical Rationale only indicates that validation of Requirement R1 risk assessments is required. The Technical Rationale should also be updated to more clearly correct and clarify all references to requirements to align with the newly proposed CIP-014-4 Requirements R1-R5.

Alternatively, a new SAR could be developed to remove Requirement R6 from the proposed CIP-014-4 standard. The new requirements proposed in CIP-014-4 Requirements R1-R5 outline necessary specifics for more meaningful risk assessments, which reduces the need for unaffiliated third-party verification, especially given that auditors are also directed to apply various methods to test the validity of station identifications under current CIP-014-3 Requirement R1.[1]

[1] CMEP Practice Guide CIP-014-2

Likes 0	
Dislikes 0	

Response

Thank you for your comments. IROLs will be addressed accordingly by other projects if this is effected by other projects.

Third-party verification should include both Requirements R1 and R2 assessment results.

The drafting team has no comments for suggested new SAR to remove Requirement R6.

Lucinda Bradshaw - Lucinda Bradshaw On Behalf of: Byron Booker, Oncor Electric Delivery, 1; - Lucinda Bradshaw

Answer	
Document Name	

Comment

N/A

Likes 0	
Dislikes 0	
Response	
N/A.	
Bret Galbraith - Seminole Electric Cooperative, Inc. - 6	
Answer	
Document Name	
Comment	
Seminole Electric Cooperative would like clarification on: 1. In Attachment 1 – Applicability Criteria, If a generator has a Collector bus, but the collector bus also serves as a Transmission Facility, how is it classified? Is it classified as a collector bus or Transmission Facility? 2. How to classify a transmission station/substation that has one line that exits, has a tap half a mile out for example, then goes to two separate Transmission Facilities? How do we count the weight of the transmission station/substation that has one line exiting but it systematically connected to two Transmission Facilities? 3. In requirement R2, are proximate Transmission stations in scope even if they are not BES?	
Likes 0	
Dislikes 0	
Response	
Thank you for your comments. If a collector bus serves more than a collector bus, then it is not a collector bus any more. Each Transmission Facility should be assessed separately. Only counts the lines connected to the Facility. Please see revised Requirement R2. Proximate stations only apply to BES thansmission stations.	
Hillary Creurer - Allete - Minnesota Power, Inc. - 1	

Answer	
Document Name	
Comment	
Minnesota Power supports MRO-NSRF comments.	
Likes 0	
Dislikes 0	
Response	
Thank you for your comments. Please see responses to the MRO-NSRF's comments.	
Nick Leathers - Nick Leathers On Behalf of: David Jendras Sr, Ameren - Ameren Services, 3, 6, 1; - Nick Leathers	
Answer	
Document Name	
Comment	
We suggest changing the wording of the VSLs so they are not so burdensome.	
Likes 0	
Dislikes 0	
Response	
Thank you for your comments. Drafting team has reviewed the VSLs and believe that the VSLs are justified.	
Ben Hammer - Western Area Power Administration - 1	
Answer	
Document Name	
Comment	

Understanding that R6, formerly R2 under CIP-014-3, is out of scope for this SAR, WAPA recommends a SAR be drafted to remove R6 as an administrative burden that should no longer be needed, given that this project has added the necessary specifics required for a meaningful risk assessment, diminishing the need for third-party verification. Also, there has been anecdotal experience as an industry that auditors have audited the (CIP-014-3) R1 risk assessments directly without relying on the R2 third-party verification as directed by the RSAW. If (CIP-014-4) R6 is to be retained, 90 calendar days for completing R6 in R6.2 is proving to be tight for some larger entities, which request extension to 180 calendar days (which would be much easier to calculate as six calendar months to avoid getting tripped up on 28/30/31-day months).	
Likes 0	
Dislikes 0	
Response	
Thank you for your comments. Requirement R6 was approved by the industry in the previous version. It is out of scope for this project.	
Rebika Yitna - Rebika Yitna On Behalf of: Roger Brand, MEAG Power, 3, 1; - Rebika Yitna	
Answer	
Document Name	
Comment	
No additional comments	
Likes 0	
Dislikes 0	
Response	
Thank you for your feedback.	
Michelle Pagano - Con Ed - Consolidated Edison Co. of New York - 5	
Answer	
Document Name	
Comment	

This standard does not use the glossary term "Facility" other than in Attachment 1 and the exemption portion of 4.1.2 in the Applicability section; this creates ambiguity on whether the proximate stations identified in R2 are required to meet BES criteria or not. Strategic use of that term may alleviate some of the confusion around that requirement expressed during the webinar.	
Likes 0	
Dislikes 0	
Response	
Thank you for your comments. Please see revised Requirement R2. The drafting team added “existing BES” to clarify that only BES stations are in scope for proximate stations.	
Zahid Qayyum - New York Power Authority - 5	
Answer	
Document Name	
Comment	
• NYPA still believes that Requirement R2 remains vague and open to varied interpretations. For example, under R2 when evaluating the proximate transmission substations, the language in R2 is unclear whether any BES transmission station regardless of its voltage level should be assessed if it falls within 1,500 feet of a station identified in R1. We recommend SDT should give guidance in the standard itself if possible. The proximity of 1500ft tends to have more impact in urban cities therefore we recommend the SDT to consider this situation as well. • Also regarding R3.1, it would be helpful if the SDT could provide guidance on the 'minimum' threshold for identifying unacceptable generation or load loss to support more consistent interpretation and understanding. • Many interconnections projects, at least in the NPCC region, put a placeholder of in-service date of within 3 years, but these dates are often extended based on project specific timelines. Requiring a 36 month risk assessment (R1) would force TOs to study those projects which may not materialize within the said timeline or likely to have their ISDs extended, placing an unnecessary burden on TO’s planning and study resources.	
Likes 0	
Dislikes 0	
Response	

Thank you for your comments. Please see revised Requirement R2. The drafting team added “existing BES” to clarify that only BES stations are in scope for proximate stations. The drafting team added “technically justified” into R3.1 and associate Technical Rationale document explains thresholds identifying unacceptable generation and load loss within an Interconnection. If a project is not firm planned and kept being delayed, it can be explained to the auditors if they are questioned.

Jamison Cawley - Nebraska Public Power District - 1	
Answer	
Document Name	
Comment	
• Under R2 clarify if “proximate” substation voltages must be 200kV and above or if the scope included all BES voltages. • Technical Rationale for R3 part 3.4 states: *“the term “inoperable” includes the total loss of communication and protection equipment at the substation, necessitating delayed clearance from far-end relaying to isolate the event’s impacts.”* Clarify if this total loss of equipment is for only the applicable substation or also includes the proximate substation equipment. • The Technical Rationale should clarify that fault type and fault location in a substation will be defined in the TO methodology. • Per the 7/8/25 WebEx Q&A “the standard is silent” on what voltages to simulate faults on in a single substation with multiple voltages (ex 345kV with 230kV or 115kV). The Technical Rationale should clarify that this can be defined in the TO methodology. • The Technical Rationale should clarify if the intent of the standard is for simultaneous faults to be simulated at applicable and proximate substations per the statements made on the 7/8/25 WebEx Q&A.	
Likes 1	Nebraska Public Power District, 5, Bender Ronald
Dislikes 0	
Response	
Thank you for your comments. Please see revised Requirement R2. The drafting team added “existing BES” to clarify that only BES stations are in scope for proximate stations. Requirement R3, Part 3.4 has been revised. Current version does not include proximate stations. Fault types and locations are up to the entity to define. But, they need to be justified. Every situation is different. That is why the drafting team does not want to specify fault	

types and locations. The TO should consider the most severe fault impact and document it. Requirement R3 has been modified to separate Fault simulations for applicable stations and proximate stations.	
Lincoln Burton - Con Ed - Consolidated Edison Co. of New York - 3	
Answer	
Document Name	
Comment	
This standard does not use the glossary term "Facility" other than in Attachment 1 and the exemption portion of 4.1.2 in the Applicability section; this creates ambiguity on whether the proximate stations identified in R2 are required to meet BES criteria or not. Strategic use of that term may alleviate some of the confusion around that requirement expressed during the webinar.	
Likes 0	
Dislikes 0	
Response	
Thank you for your comments. The drafting team added “BES” to Requirement R2 for clarification.	
Alan Kloster - Alan Kloster On Behalf of: Jeremy Harris, Evergy, 3, 5, 1, 6; Kevin Frick, Evergy, 3, 5, 1, 6; Marcus Moor, Evergy, 3, 5, 1, 6; Tiffany Lake, Evergy, 3, 5, 1, 6; - Alan Kloster	
Answer	
Document Name	
Comment	
Evergy supports and incorporates by reference the comments of the MRO NSRF for question #8.	
Likes 0	
Dislikes 0	
Response	
Thank you for your comments. Please see resopnses to the MRO NSRF’s comments.	

Rachel Coyne - Texas Reliability Entity, Inc. - 10	
Answer	
Document Name	
Comment	
Texas RE noticed the clean and redlines versions of CIP-014-4 do not match. The clean shows the subparts of Parts 3.3 and 3.4 as bullets, whereas the redline version shows them as numbers.	
Likes 0	
Dislikes 0	
Response	
Thank you for your comments. The bullets have been replaced by the numbers.	
Jason Chandler - Con Ed - Consolidated Edison Co. of New York - 6	
Answer	
Document Name	
Comment	
This standard does not use the glossary term "Facility" other than in Attachment 1 and the exemption portion of 4.1.2 in the Applicability section; this creates ambiguity on whether the proximate stations identified in R2 are required to meet BES criteria or not. Strategic use of that term may alleviate some of the confusion around that requirement expressed during the webinar.	
Likes 0	
Dislikes 0	
Response	
Thank you for your comments. The drafting team added “BES” to Requirement R2 for clarification.	
Dermot Smyth - Con Ed - Consolidated Edison Co. of New York - 1, Group Name Con Edison	
Answer	

Document Name	
Comment	
This standard does not use the glossary term "Facility" other than in Attachment 1 and the exemption portion of 4.1.2 in the Applicability section; this creates ambiguity on whether the proximate stations identified in R2 are required to meet BES criteria or not. Strategic use of that term may alleviate some of the confusion around that requirement expressed during the webinar.	
Likes 0	
Dislikes 0	
Response	
Thank you for your comments. The drafting team added “BES” to Requirement R2 for clarification.	
Matt Carden - Southern Company - Southern Company Services, Inc. - 1	
Answer	
Document Name	
Comment	
Under “Purpose” we prefer the previous language of “as a result of”. Southern Company recommends swapping Requirement R3 and R4 chronologically. This follows a more logical approach of identifying the stations and responsibilities to perform the assessment in the first three requirements followed by an assessment methodology in R4 and the performance of an assessment in R5. Southern Company recommends removing Requirement R6. With the understanding that this is not explicitly in scope of the current SAR, the added specificity of the proposed standard eliminates the reliability benefit of the third-party verifier. Additionally, based on a previous audit of CIP-014-3, Southern Company did not observe the Regional Entity take into consideration the review by the R2 third party verifier. If this is consistent across other Regional Entities, then an elimination of CIP-014-4 R6 may be appropriate due to the extra cost and the lack of a reliability benefit.	
Likes 0	
Dislikes 0	

Response
Thank you for your comments. Either “due to” and “as result of” serves the same purpose. The drafting team believes that they are both clear enough. The drafting team reviewed the orders for all of the Requirements and believes that this is the right order. Requirement R6 was approved by the industry in the approved version of this Standard. It is out of scope for this project to remove R6.
Misty Carneal - Duke Energy - 1,3,5,6 - Texas RE,SERC,RF
Answer
Document Name
Comment
Duke Energy does not have any additional comments. Thank you for considering our comments.
Likes 0
Dislikes 0
Response
Thank you for your feedback.
Jodi Yeary - AEP - 3
Answer
Document Name
Comment
AEP is supportive of the VSLs, except for R2. Currently, R2 only specifies a Severe VSL with specific reference to “fence line” in the VSL table. This increases the likelihood of severe violations being identified based on disagreements on the method of distance calculation, which is not a high risk reliability objective. Lower severity VSLs should be identified for R2. Thank you for being so responsive to comments from the previous version to this version!

Likes 0	
Dislikes 0	
Response	
Thank you for your comments. Requirement R2 is a “Pass/Fail” Requirement. The drafting team believes that it belongs to the severe level.	
Isidoro Behar - Long Island Power Authority - 1	
Answer	
Document Name	
Comment	
Similar to TPL-001-5.1 Requirement 2.6, we recommend that the SDT consider, and if applicable, outline under which specific circumstances past studies/results can be utilized for the CIP-014-4 risk assessment. The possible use of past studies may reduce workload of entities and support a more cost effective option to address CIP-014-4 needs.	
Likes 0	
Dislikes 0	
Response	
Thank you for your comments. Requirement R5, Part 5.2 explains when a Transmission Owner may forgo additional assessments on that Transmission station or Transmission substation.	
Nikki Carson-Marquis - Nikki Carson-Marquis On Behalf of: Theresa Allard, Minnkota Power Cooperative Inc., 1; - Nikki Carson-Marquis	
Answer	
Document Name	
Comment	
MPC appreciates the SDT’s efforts and the opportunity to comment.	
Likes 0	

Dislikes 0	
Response	
Thank you for your feedback.	
Mark Garza - FirstEnergy - FirstEnergy Corporation - 4, Group Name FE Voter	
Answer	
Document Name	
Comment	
No additional comments.	
Likes 0	
Dislikes 0	
Response	
Thank you for your feedback.	
Randy Peters - Manitoba Hydro - 1,3,5,6 - MRO	
Answer	
Document Name	
Comment	
Manitoba Hydro agrees with the modifications made for R5, especially the addition of the new sub-requirement R5.2. However, it will be hard for a third-party reviewer to verify a current assessment unless the results of the previous assessment are provided with the current assessment Manitoba Hydro recommends that requirement R6 be removed from the standard as it is overly administrative. The revisions made from this project specifically outline study requirements and an additional third party review of the study is no longer necessary. In addition, if there were minimal changes to the network from the previous third-party assessment, a new third party assessment provides very little value. The NERC Quality Review (QR) team may be able to assist with this change to make the standard more efficient and cost effective.	

Likes 0	
Dislikes 0	
Response	
Requirement R6 was approved by the industry in the approved version of this Standard. It is out of scope for this project to remove R6.	
Andrew Smith - APS - Arizona Public Service Co. - 5	
Answer	
Document Name	
Comment	
AZPS appreciates the clarifications included by the Drafting Team in this draft, however continues to seek additional clarifications regarding entity responsibilities or exclusion of responsibilities for non-owned/operated stations/substations within proximity of identified locations. AZPS seeks clarification on if a site is included as part of Requirement R2 and identified during the risk assessment per R5 but is owned by a different company how that applies to R8-R10.	
Likes 0	
Dislikes 0	
Response	
Thank you for your comments. The workscope from the SAR directs the drafting team to account for adjacent Transmission stations or Transmission substations of differing ownership as well as for those Transmission stations or Transmission substations within line-of-sight to each other.	
Greg Sorenson - Greg Sorenson On Behalf of: Tremayne Brown, ReliabilityFirst , 10; - Greg Sorenson	
Answer	
Document Name	
Comment	

Consider the addition of definitive or explicit trigger for Requirement R8 if the identification of the critical asset remains unchanged. Without this it creates a significant blind spot because the threat environment can evolve and shift dramatically over the 36-month cycle or even since the initial assessment or implementation of the required physical security controls. Without a built-in mechanism to re-evaluate threats entities may overlook new or emerging vulnerabilities, leaving critical assets exposed.

Likes 0	
Dislikes 0	

Response
Thank you for your comments. Requirement R8 is out of scope for this project.

Donna Wood - Tri-State G and T Association, Inc. - 1	
Answer	
Document Name	

Comment
NA

Likes 0	
Dislikes 0	

Response
N/A.

Thomas Breen - Berkshire Hathaway Energy - MidAmerican Energy Co. - 1	
Answer	
Document Name	

Comment
Support the comments of the MRO NSRF.

Likes 0	
Dislikes 0	
Response	
Thank you for your comment. Please see responses to the MRO NSRF'S comments.	
Lexi Dobrzysnki - Lexi Dobrzysnki On Behalf of: Angela Dockter, Alliant Energy Corporation Services, Inc., 4; - Lexi Dobrzysnki	
Answer	
Document Name	
Comment	
Alliant Energy mirrors the MRO NSRF group Comments.	
Likes 0	
Dislikes 0	
Response	
Thank you for your comment. Please see responses to the MRO NSRF'S comments.	
Stephen Stafford - Stephen Stafford On Behalf of: Greg Davis, Georgia Transmission Corporation, 1; - Stephen Stafford	
Answer	
Document Name	
Comment	
The primary issue with this standard as it is written, and as this draft continues is the application of requirements/expectations appropriate for the Transmission Planner/Planning Coordinator function to the Transmission Owner instead. This reduces clarity on the types of studies to be performed to assess the extreme events identified in this standard. Regarding R6: With an attempt at clarifying study criteria, though they should be applied to the appropriate planning entity, there is no reason to maintain a requirement for an unaffiliated third party to perform a verification of a transmission planning analysis associated with the risk	

assessment. Instead of requiring planning entities be the third party verifier, they should just perform the study under clearly defined requirements in a TPL standard and communicate this information to the Transmission Owner. It is also important to note the third party verifying the risk assessment for this physical security standard is not required to have expertise in that area according to this requirement. Additionally, the SDT should consider removing the Reliability Coordinator as a potential third party verifier as that function does not perform the type of analysis being sought in this standard. Additional Comment: The analysis outlined in the CIP-014 standard is an evaluation of an extreme event and is based on transmission planning analysis. Currently, the existing TPL-001 standard requires the evaluation of extreme events, though, it is not specific to this particular substation outage analysis and corrective actions are not required for these events. Additionally, there are ongoing efforts to establish a separate standard to address the long-term planning analysis around extreme weather events. It would seem NERC and the industry are potentially missing an opportunity to consolidate requirements around the evaluation of extreme events better than what is currently provided for in the current construct of the existing and planned Reliability Standards. Consideration should be given by NERC to provide a better pathway to house long-term planning requirements around extreme event analysis within the TPL standards (not CIP) and specify the reliability analyses needed, the parameters for determining reliability, expectations for corrective actions, and the communication path from planning to owners and others with a reliability-related need for this information. The planning assessment/CAP required by TPL-001 is already required to be distributed to applicable owners. Clarifying the extreme event expectations in TPL-001 to specify the substation outage alluded to in CIP-014 is one pathway to better align standard requirements with the appropriate entity.

Likes 0	
Dislikes 0	

Response
Thank you for your comments. The drafting team is directed by the SAR workscopes to clarify the risk assessment methods, dynamic studies, study scenario(s) and other study assumptions are appropriate and reasonable considering, etc. Requirement R6 was approved by the industry in the previous version and is out of scope for this project.

Amy Key - Berkshire Hathaway Energy - MidAmerican Energy Co. - 3	
Answer	
Document Name	

Comment	
MEC supports the comments of the MRO NSRF	
Likes 0	
Dislikes 0	
Response	
Thank you for your comment. Please see responses to the MRO NSRF'S comments.	
Anna Martinson - MRO - 1,2,3,4,5,6 - MRO, Group Name MRO Group	
Answer	
Document Name	
Comment	
Understanding that R6, formerly R2 under CIP-014-3, is out of scope for this SAR, MRO NSRF recommends a SAR be drafted to remove R6 as an administrative burden that should no longer be needed, given that this project has added the necessary specifics required for a meaningful risk assessment, diminishing the need for third-party verification. Also, there has been anecdotal experience as an industry that auditors have audited the (CIP-014-3) R1 risk assessments directly without relying on the R2 third-party verification as directed by the RSAW. If (CIP-014-4) R6 is to be retained, 90 calendar days for completing R6 in R6.2 is proving to be tight for some larger entities, which request extension to 180 calendar days (which would be much easier to calculate as six calendar months to avoid getting tripped up on 28/30/31-day months).	
Likes 0	
Dislikes 0	
Response	
Thank you for your comments. The drafting team can see Requirement R6 is burdensome for the industry and agrees that a SAR has to be created in order to remove R6. Thank you for recognizing that it is out of scope for this project to remove Requirement R6.	
Ronald Hoover - Bonneville Power Administration - 1,3,5,6 - WECC	
Answer	

Document Name	
Comment	
BPA appreciates the opportunity to comment. BPA recognizes CIP-014 and physical security are growing beyond the intent of the original standard. BPA recommends evaluating the need to add additional NERC registrations to the standard applicability to broaden the available information required within CIP-014-4. BPA has noticed a possible grammar error with the redline of the technical rationale. Under the Rationale for Requirement R3, Part 3.1, located in the second line of the second paragraph Transmission substation is repeated twice. BPA believes this was supposed to follow the NERC glossary of terms and read “Transmission stations or sub-stations.	
Likes 0	
Dislikes 0	
Response	
Thank you for your comments. The reason for CIP-014 and physical security are growing beyond the intent of the original standard is because there is a gap in reliability based on the SAR pointed out. The drafting team believes that current draft meets the SAR workscopes. “Transmission substation” in the Technical Rationale has been fixed.	
Sean Steffensen - IDACORP - Idaho Power Company - 1	
Answer	
Document Name	
Comment	
In reference to the proposed changes to CIP-014 Section 4.1.1, IPC recommends explicitly requiring an agreement between joint owners of Transmission stations or substations to designate which entity is responsible for conducting the risk assessment and physical security studies to ensure clarity and accountability.	
Likes 0	
Dislikes 0	
Response	
Thank you for your comments and recommendation. Drafting team wants to leave the agreement to be made between joint owners of Transmission stations or substations. Not specified in the Applicability section.	
Alison Nickells - NiSource - Northern Indiana Public Service Co. - 1	

Answer	
Document Name	
Comment	
no comments.	
Likes 0	
Dislikes 0	
Response	
Thank you for your feedback.	

Standard Development Timeline

This section is maintained by the drafting team during the development of the standard and will be removed when the standard is adopted by the NERC Board of Trustees (Board).

Description of Current Draft

CIP-014-4 is posted for a 45-day formal comment period with additional ballot.

Completed Actions	Date
Standards Committee approved Standard Authorization Request for posting	June 21, 2023
Standard Authorization Request posted for comment	July 26 – August 24, 2023
Accepted Revised Standard Authorization Request	January 17, 2024
45-day formal or informal comment period with ballot	May 20 – July 3, 2024
45-day formal or informal comment period with additional ballot	September 23 – November 6, 2024
45-day formal comment period with additional ballot	June 6 – July 21, 2025

Anticipated Actions	Date
45-day formal comment period with additional ballot	March 31 – May 14, 2026
10-day final ballot	May 27 – June 5, 2026
Board adoption	October 8, 2026

New or Modified Term(s) Used in NERC Reliability Standards

This section includes all new or modified terms used in the proposed standard that will be included in the *Glossary of Terms Used in NERC Reliability Standards* upon applicable regulatory approval. Terms used in the proposed standard that are already defined and are not being modified can be found in the *Glossary of Terms Used in NERC Reliability Standards*. The new or revised terms listed below will be presented for approval along with the proposed standard. Upon Board adoption, this section will be removed.

Term(s):

None.

A. Introduction

1. **Title:** Physical Security

2. **Number:** CIP-014-4

3. **Purpose:** To identify and protect Transmission stations and Transmission substations, and their associated primary control centers, that if rendered inoperable or damaged due to a physical attack, could result in instability, uncontrolled separation, or Cascading within an Interconnection.

4. **Applicability:**

   4.1. Functional Entities:

   4.1.1. Transmission Owner that owns or jointly owns one or more Transmission stations or Transmission substations that meet the applicability criteria of Attachment 1.

   4.1.2. Transmission Operator

   Exemption: Facilities in a "protected area," as defined in 10 C.F.R. § 73.2, within the scope of a security plan approved or accepted by the Nuclear Regulatory Commission are not subject to this Standard; or Facilities within the scope of a security plan approved or accepted by the Canadian Nuclear Safety Commission are not subject to this Reliability Standard.

5. **Effective Date:** See Implementation Plan for CIP-014-4.

B. Requirements and Measures

R1. Each Transmission Owner shall, at least once every 36 calendar months, identify each applicable Transmission station and Transmission substation meeting any of the criteria in Attachment 1 that is either existing or planned to be in service within 36 calendar months. *[Violation Risk Factor: High; Time-Horizon: Long-term Planning]*

M1. Examples of evidence may include, but are not limited to, dated written or electronic documentation of the Transmission station(s) and Transmission substation(s) (existing and those planned to be in service within 36 calendar months) that meet any of the criteria in Attachment 1.

R2. Each Transmission Owner with applicable Transmission station(s) or Transmission substation(s) identified in Requirement R1 shall identify proximate existing Bulk Electric System Transmission station(s) and Bulk Electric System Transmission substation(s), irrespective of ownership, within 1500 feet or 457 meters (the shortest distance, measured substation fence line to substation fence line) of an applicable Transmission station or Transmission substation identified in Requirement R1. *[Violation Risk Factor: Medium; Time-Horizon: Long-term Planning]*

M2. Examples of evidence may include, but are not limited to, dated written or electronic documentation of the Bulk Electric System Transmission stations or Bulk Electric System Transmission substations identified in Requirement R2.

R3. Each Transmission Owner shall have a documented risk assessment methodology for evaluating the loss of each applicable Transmission station or Transmission substation identified in Requirement R1. The methodology shall include, at a minimum, the following: *[Violation Risk Factor: High; Time-Horizon: Long-term Planning]*

3.1. Documented criteria for assessing instability, uncontrolled separation, or Cascading within an Interconnection. The criteria shall include, at a minimum, technically justified thresholds identifying unacceptable generation and load loss within an Interconnection.

3.2. A provision that steady-state and dynamic simulations shall each be performed using at a minimum one System peak Load case and one System Off-Peak Load case.

3.3. Specifications for simulations at each applicable Transmission station or Transmission substation identified in accordance with Requirement R1 and, if applicable, at each associated proximate existing Bulk Electric System Transmission station(s) and Bulk Electric System Transmission substation(s) identified in accordance with Requirement R2, that include:

3.3.1. At the applicable Transmission station or Transmission substation:

3.3.1.1. Prior loss of communication and Protection Systems;

3.3.1.2. Application of a Fault or Faults; and

3.3.1.3. Delayed (remote) clearing times shall be used unless otherwise technically substantiated.

3.3.2. At each proximate existing Bulk Electric System Transmission station(s) and Bulk Electric System Transmission substation(s), as applicable:

3.3.2.1. Application of a Fault or Faults, either simultaneous with or following the Fault or Faults applied under Part 3.3.1.2; and

3.3.2.2. Normal clearing times shall be used unless otherwise technically substantiated.

3.3.3. A documented justification for the Fault(s) associated with physical attack to be simulated. A single justification may be used for multiple locations. The justification shall include at a minimum:

3.3.3.1. The type of credible high-severity physical attack considered; and

3.3.3.2. The type of Fault(s) selected based upon the attack considered.

3.3.4. Removal of all Elements that Protection Systems and other controls are expected to automatically disconnect.

3.3.5. Actual or more conservative clearing times shall be used.

M3. Each Transmission Owner shall provide dated evidence, such as electronic or hard copies, of a risk assessment methodology satisfying Requirement R3.

R4. Each Transmission Owner with applicable Transmission station(s) and Transmission substation(s) identified in Requirement R1 jointly owned by multiple Transmission Owners shall coordinate with each appropriate Transmission Owner(s) to determine and document their individual and joint responsibilities under Requirement R3 and Requirement R5. *[Violation Risk Factor: Medium; Time-Horizon: Operations Planning, Long-term Planning]*

M4. Examples of acceptable evidence may include, but are not limited to, dated documentation, such as meeting minutes, agreements, and email correspondence, that identifies that agreement has been reached on individual and joint responsibilities for performing the required risk assessments.

R5. At least once every 36 calendar months, each Transmission Owner shall perform a risk assessment to identify applicable Transmission station(s) and Transmission substation(s) identified in Requirement R1, that if rendered inoperable or damaged could result in instability, uncontrolled separation, or Cascading within an Interconnection, using the methodology established in Requirement R3. Jointly owned Transmission station(s) and Transmission substation(s) shall be assessed according to the responsibilities documented under Requirement R4. If proximate Bulk Electric System Transmission station(s) and Bulk Electric System Transmission substation(s) were identified in Requirement R2, they shall be included in the risk

assessment according to Requirement R3, Part 3.3. *[Violation Risk Factor: High; Time-Horizon: Operations Planning, Long-term Planning]*

5.1. If during a risk assessment, a Transmission station or Transmission substation is identified in either the dynamic or steady-state simulation as causing instability, uncontrolled separation, or Cascading within an Interconnection when rendered inoperable or damaged, then no further simulation is required.

5.2. If a previous risk assessment has identified a Transmission station or Transmission substation as causing instability, uncontrolled separation, or Cascading within an Interconnection when rendered inoperable or damaged, then the Transmission Owner may forgo additional assessments on that Transmission station or Transmission substation. Requirement R5, Part 5.3 and Requirement R7 through Requirement R10 still apply to that Transmission station or Transmission substation until a new risk assessment demonstrates otherwise.

5.3. The Transmission Owner shall identify the primary control center that operationally controls each Transmission station or Transmission substation identified as causing instability, uncontrolled separation, or Cascading within an Interconnection when rendered inoperable or damaged in the Requirement R5 risk assessment.

M5. Examples of acceptable evidence may include, but are not limited to, dated written or electronic documentation of the risk assessment satisfying Requirement R5 including the identified Transmission station(s) or Transmission substation(s). For Requirement R5, Part 5.3, examples of acceptable evidence may include, but are not limited to, dated written or electronic documentation of the identification of the primary control center that operationally controls each identified Transmission station or Transmission substation.

R6. Each Transmission Owner shall have an unaffiliated third party verify the risk assessment performed under Requirement R5. The verification may occur concurrently with or after the risk assessment performed under Requirement R5. *[Violation Risk Factor: Medium; Time-Horizon: Long-term Planning]*

6.1. Each Transmission Owner shall select an unaffiliated verifying entity that is either:

- A registered Planning Coordinator, Transmission Planner, or Reliability Coordinator; or
- An entity that has transmission planning or analysis experience.

6.2. The unaffiliated third-party verification shall verify the Transmission Owner's risk assessment performed under Requirement R5, which may include recommendations for the addition or deletion of a Transmission station(s) or Transmission substation(s). The Transmission Owner shall ensure the verification

is completed within 90 calendar days following the completion of the Requirement R5 risk assessment.

6.3. If the unaffiliated verifying entity recommends that the Transmission Owner add a Transmission station(s) or Transmission substation(s) to, or remove a Transmission station or Transmission substation from, its identification under Requirement R5, the Transmission Owner shall either, within 60 calendar days of completion of the verification, for each recommended addition or removal of a Transmission station or Transmission substation:

- Modify its identification under Requirement R5 consistent with the recommendation; or
- Document the technical basis for not modifying the identification in accordance with the recommendation.

6.4. Each Transmission Owner shall implement procedures, such as the use of non-disclosure agreements, for protecting sensitive or confidential information made available to the unaffiliated third-party verifier and to protect or exempt sensitive or confidential information developed pursuant to this Reliability Standard from public disclosure.

M6. Examples of acceptable evidence may include, but are not limited to, dated written or electronic documentation that the Transmission Owner completed an unaffiliated third party verification of the Requirement R5 risk assessment and satisfied all of the applicable provisions of Requirement R6, including, if applicable, documenting the technical basis for not modifying the identification in Requirements R1, R2, R3, R4, and R5 as specified under Part 6.3. Additionally, examples of evidence may include, but are not limited to, written or electronic documentation of procedures to protect information under Part 6.4.

R7. For a primary control center(s) identified by the Transmission Owner according to Requirement R5, Part 5.3 that a) operationally controls an identified Transmission station or Transmission substation verified according to Requirement R6, and b) is not under the operational control of the Transmission Owner: the Transmission Owner shall, within seven calendar days following completion of Requirement R6, notify the Transmission Operator that has operational control of the primary control center of such identification and the date of completion of Requirement R6. *[Violation Risk Factor: Lower; Time-Horizon: Long-term Planning]*

7.1. If a Transmission station or Transmission substation previously identified under Requirements R1 and R5 and verified according to Requirement R6 is removed from the identification during a subsequent risk assessment performed according to Requirement R5 or a verification according to Requirement R6, then the Transmission Owner shall, within seven calendar days following the verification or the subsequent risk assessment, notify the Transmission Operator that has operational control of the primary control center of the removal.

M7. Examples of acceptable evidence may include, but are not limited to, written or electronic notifications or communications that the Transmission Owner notified each Transmission Operator, as applicable, according to Requirement R7.

R8. Each Transmission Owner that identified a Transmission station, Transmission substation, or a primary control center in Requirement R5 and verified according to Requirement R6, and each Transmission Operator notified by a Transmission Owner according to Requirement R7, shall conduct an evaluation of the potential threats and vulnerabilities of a physical attack to each of their respective Transmission station(s), Transmission substation(s), and primary control center(s) identified in Requirement R5 and verified according to Requirement R6. The evaluation shall consider the following: *[Violation Risk Factor: Medium; Time-Horizon: Operations Planning, Long-term Planning]*

8.1. Unique characteristics of the identified and verified Transmission station(s), Transmission substation(s), and primary control center(s);

8.2. Prior history of attack(s) on similar facilities taking into account the frequency, geographic proximity, and severity of past physical security related events; and

8.3. Intelligence or threat warnings received from sources such as law enforcement, the Electric Reliability Organization (ERO), the Electricity Sector Information Sharing and Analysis Center (E-ISAC), U.S. federal and/or Canadian governmental agencies, or their successors.

M8. Examples of evidence may include, but are not limited to, dated written or electronic documentation that the Transmission Owner or Transmission Operator conducted an evaluation of the potential threats and vulnerabilities of a physical attack to their respective Transmission station(s), Transmission substation(s), and primary control center(s) as specified in Requirement R8.

R9. Each Transmission Owner that identified a Transmission station, Transmission substation, or primary control center in Requirement R5 and verified according to Requirement R6, and each Transmission Operator notified by a Transmission Owner according to Requirement R7, shall develop and implement a documented physical security plan(s) that covers their respective Transmission station(s), Transmission substation(s), and primary control center(s). The physical security plan(s) shall be developed within 120 calendar days following the completion of Requirement R6 and executed according to the timeline specified in the physical security plan(s). The physical security plan(s) shall include the following attributes: [*Violation Risk Factor*: *High; Time-Horizon: Long-term Planning*]

9.1. Resiliency or security measures designed collectively to deter, detect, delay, assess, communicate, and respond to potential physical threats and vulnerabilities identified during the evaluation conducted in Requirement R8.

9.2. Law enforcement contact and coordination information.

9.3. A timeline for executing the physical security enhancements and modifications specified in the physical security plan.

9.4. Provisions to evaluate evolving physical threats, and their corresponding security measures, to the Transmission station(s), Transmission substation(s), or primary control center(s).

M9. Examples of evidence may include, but are not limited to, dated written or electronic documentation of its physical security plan(s) that covers their respective identified and verified Transmission station(s), Transmission substation(s), and primary control center(s) as specified in Requirement R6, and additional evidence demonstrating execution of the physical security plan according to the timeline specified in the physical security plan.

R10. Each Transmission Owner that identified a Transmission station, Transmission substation, or primary control center in Requirement R5 and verified according to Requirement R6, and each Transmission Operator notified by a Transmission Owner according to Requirement R7, shall have an unaffiliated third party review the evaluation performed under Requirement R8 and the security plan(s) developed under Requirement R9. The review may occur concurrently with or after completion of the evaluation performed under Requirement R8 and the security plan development under Requirement R9. *[Violation Risk Factor: Medium; Time-Horizon: Long-term Planning]*

10.1. Each Transmission Owner and Transmission Operator shall select an unaffiliated third-party reviewer from the following:

- An entity or organization with electric industry physical security experience and whose review staff has at least one member who holds either a Certified Protection Professional (CPP) or Physical Security Professional (PSP) certification;
- An entity or organization approved by the ERO;
- A governmental agency with physical security expertise; or
- An entity or organization with demonstrated law enforcement, government, or military physical security expertise.

10.2. The Transmission Owner or Transmission Operator, respectively, shall ensure that the unaffiliated third-party review is completed within 90 calendar days of completing the security plan(s) developed in Requirement R9. The unaffiliated third-party review may, but is not required to, include recommended changes to the evaluation performed under Requirement R8 or the security plan(s) developed under Requirement R9.

10.3. If the unaffiliated third-party reviewer recommends changes to the evaluation performed under Requirement R8 or security plan(s) developed under

Requirement R9, the Transmission Owner or Transmission Operator shall, within 60 calendar days of the completion of the unaffiliated third party review, for each recommendation:

- Modify its evaluation or security plan(s) consistent with the recommendation; or
- Document the reason(s) for not modifying the evaluation or security plan(s) consistent with the recommendation.

10.4. Each Transmission Owner and Transmission Operator shall implement procedures, such as the use of non-disclosure agreements, for protecting sensitive or confidential information made available to the unaffiliated third-party reviewer and to protect or exempt sensitive or confidential information developed pursuant to this Reliability Standard from public disclosure.

M10. Examples of evidence may include, but are not limited to, written or electronic documentation that the Transmission Owner or Transmission Operator had an unaffiliated third party review the evaluation performed under Requirement R8 and the security plan(s) developed under Requirement R9 as specified in Requirement R10 including, if applicable, documenting the reasons for not modifying the evaluation or security plan(s) in accordance with a recommendation under Part 10.3. Additionally, examples of evidence may include, but are not limited to, written or electronic documentation of procedures to protect information under Part 10.4.

C. Compliance

1. Compliance Monitoring Process

1.1. Compliance Enforcement Authority: "Compliance Enforcement Authority" means NERC or the Regional Entity in their respective roles of monitoring and enforcing compliance with the NERC Reliability Standards.

1.2. Evidence Retention: The following evidence retention period(s) identify the period of time an entity is required to retain specific evidence to demonstrate compliance. For instances where the evidence retention period specified below is shorter than the time since the last audit, the Compliance Enforcement Authority may ask an entity to provide other evidence to show that it was compliant for the full-time period since the last audit.

The Transmission Owner and Transmission Operator shall keep data or evidence to show compliance, as identified below, unless directed by its Compliance Enforcement Authority to retain specific evidence for a longer period of time as part of an investigation:

The responsible entities shall retain evidence, as per Requirements R1 through R10, for three years.

If a Responsible Entity is found non-compliant, it shall keep information related to the non-compliance until mitigation is complete and approved, or for the time specified above, whichever is longer.

The CEA shall keep the last audit records and all requested and submitted subsequent audit records.

1.3. Compliance Monitoring and Enforcement Program: "Compliance Monitoring Enforcement Program" or "CMEP" means, depending on the context (1) the NERC Compliance Monitoring and Enforcement Program (Appendix 4C to the NERC Rules of Procedure) or the Commission-approved program of a Regional Entity, as applicable, or (2) the program, department or organization within NERC or a Regional Entity that is responsible for performing compliance monitoring and enforcement activities with respect to Registered Entities' compliance with Reliability Standards.

Violation Severity Levels

	Violation Severity Levels			
	Lower VSL	**Moderate VSL**	**High VSL**	**Severe VSL**
R1.	The Transmission Owner identified each applicable Transmission station(s) and Transmission substation(s) per Attachment 1, but did so after 36 calendar months, but less than or equal to 38 calendar months. OR The Transmission Owner identified each applicable Transmission station(s) and Transmission substation(s), but failed to identify less than or equal to 10% of the applicable Transmission station(s) and Transmission substation(s) per Attachment 1.	The Transmission Owner identified each applicable Transmission station(s) and Transmission substation(s) per Attachment 1, but did so after 38 calendar months, but less than or equal to 40 calendar months. OR The Transmission Owner identified each applicable Transmission station(s) and Transmission substation(s), but failed to identify more than 10% and less than or equal to 20% of the applicable Transmission station(s) and Transmission substation(s) per Attachment 1.	The Transmission Owner identified each applicable Transmission station(s) and Transmission substation(s) per Attachment 1, but did so after 40 calendar months, but less than or equal to 42 calendar months. OR The Transmission Owner identified each applicable Transmission station(s) and Transmission substation(s), but failed to identify more than 20% and less than or equal to 30% of the applicable Transmission station(s) and Transmission substation(s) per Attachment 1.	The Transmission Owner failed to identify each applicable Transmission station(s) and Transmission substation(s) per Attachment 1. OR The Transmission Owner identified each applicable Transmission station(s) and Transmission substation(s) per Attachment 1, but did so after more than 42 calendar months. OR The Transmission Owner identified each applicable Transmission station(s) and Transmission substation(s), but failed to identify more than 30% of the applicable Transmission station(s) and Transmission substation(s) per Attachment 1.

	Violation Severity Levels			
	Lower VSL	Moderate VSL	High VSL	Severe VSL
R2.	N/A	N/A	N/A	The Transmission Owner with applicable Transmission station(s) or Transmission substation(s) identified in Requirement R1 did not identify existing Bulk Electric System Transmission station(s) and Bulk Electric System Transmission substation(s), irrespective of ownership, within 1500 feet or 457 meters (the shortest distance, measured substation fence line to substation fence line) of an applicable Transmission station or Transmission substation identified in Requirement R1.
R3.	N/A	The Transmission Owner has a risk assessment methodology that failed to include one of the requirements listed in Parts 3.1 through 3.3.	The Transmission Owner has a risk assessment methodology that failed to include two of the requirements listed in Parts 3.1 through 3.3.	The Transmission Owner has a risk assessment methodology that failed to include all three of the requirements listed in Parts 3.1 through 3.3. OR The Transmission Owner does not have a risk assessment methodology.

	Violation Severity Levels			
	Lower VSL	Moderate VSL	High VSL	Severe VSL
R4.	The Transmission Owner with applicable Transmission station(s) and Transmission substation(s) identified in Requirement R1 owned by multiple Transmission Owners failed to coordinate with each appropriate Transmission Owner(s) to determine and document their individual and joint responsibilities for documenting a risk assessment methodology under Requirement R3 and for performing any required risk assessments per Requirement R5 for less than or equal to 25% of jointly owned applicable Transmission station(s) and Transmission substation(s).	The Transmission Owner with applicable Transmission station(s) and Transmission substation(s) identified in Requirement R1 owned by multiple Transmission Owners failed to coordinate with each appropriate Transmission Owner(s) to determine and document their individual and joint responsibilities for documenting a risk assessment methodology under Requirement R3 and for performing any required risk assessments per Requirement R5 for more than 25% and less than or equal to 50% of jointly owned applicable Transmission station(s) and Transmission substation(s).	The Transmission Owner with applicable Transmission station(s) and Transmission substation(s) identified in Requirement owned by multiple Transmission Owners failed to coordinate with each appropriate Transmission Owner(s) to determine and document their individual and joint responsibilities for documenting a risk assessment methodology under Requirement R3 and for performing any required risk assessments per Requirement R5 for more than 50% and less than or equal to 75% of jointly owned applicable Transmission station(s) and Transmission substation(s).	The Transmission Owner with applicable Transmission station(s) and Transmission substation(s) identified in Requirement R1 owned by multiple Transmission Owners failed to coordinate with each appropriate Transmission Owner(s) to determine and document their individual and joint responsibilities for documenting a risk assessment methodology under Requirement R3 and for performing any required risk assessments per Requirement R5 for more than 75% and less than or equal to 100% of any evidence for jointly owned applicable Transmission station(s) and Transmission substation(s).
R5.	The Transmission Owner performed a risk assessment, but did so after 36 calendar months, but less than or equal to 38 calendar months.	The Transmission Owner performed a risk assessment, but did so after 38 calendar months, but less than or equal to 40 calendar months. OR	The Transmission Owner performed a risk assessment, but did so after 40 calendar months, but less than or equal to 42 calendar months. OR	The Transmission Owner performed a risk assessment, but did so after more than 42 calendar months. OR

	Violation Severity Levels			
	Lower VSL	Moderate VSL	High VSL	Severe VSL
		The Transmission Owner performed a risk assessment inconsistent with one of the methodology requirements listed in Requirement R3, Parts 3.1 through 3.3.	The Transmission Owner performed a risk assessment inconsistent with two of the methodology requirements listed in Requirement R3, Parts 3.1 through 3.3. OR The Transmission Owner performed a risk assessment, but failed to include the primary control center identified in Part 5.2.	The Transmission Owner performed a risk assessment inconsistent with all three of the methodology requirements listed in Requirement R3, Parts 3.1 through 3.3.
R6.	The Transmission Owner had an unaffiliated third party verify the risk assessment performed under Requirement R5, but did so in more than 90 calendar days, but less than or equal to 100 calendar days following completion of Requirement R5. OR The Transmission Owner had an unaffiliated third party verify the risk assessment performed under Requirement R5 and modified or documented the technical basis	The Transmission Owner had an unaffiliated third party verify the risk assessment performed under Requirement R5, but did so more than 100 calendar days, but less than or equal to 110 calendar days following completion of Requirement R5. OR The Transmission Owner had an unaffiliated third party verify the risk assessment performed under Requirement R5 and modified or documented the technical basis for not modifying its identification	The Transmission Owner had an unaffiliated third party verify the risk assessment performed under Requirement R5, but did so more than 110 calendar days, but less than or equal to 120 calendar days following completion of Requirement R5. OR The Transmission Owner had an unaffiliated third party verify the risk assessment performed under Requirement R5 and modified or documented the technical basis	The Transmission Owner had an unaffiliated third party verify the risk assessment performed under Requirement R5, but did so more than 120 calendar days following completion of Requirement R5. OR The Transmission Owner failed to have an unaffiliated third party verify the risk assessment performed under Requirement R5. OR

	Violation Severity Levels			
	Lower VSL	Moderate VSL	High VSL	Severe VSL
	for not modifying its identification under Requirement R5 as required by Part6.3, but did so more than 60 calendar days and less than or equal to 70 calendar days from completion of the third party verification.	under Requirement R5 as required by Part 6.3, but did so more than 70 calendar days and less than or equal to 80 calendar days from completion of the third party verification.	for not modifying its identification under Requirement R5 as required by Part 6.3, but did so more than 80 calendar days from completion of the third party verification. OR The Transmission Owner had an unaffiliated third party verify the risk assessment performed under Requirement R5, but failed to modify or document the technical basis for not modifying its identification under R4 as required by Part 6.3.	The Transmission Owner had an unaffiliated third party verify the risk assessment performed under Requirement R5, but failed to implement procedures for protecting information per Part 6.4.
R7.	The Transmission Owner notified the Transmission Operator that operates the primary control center as specified in Requirement R7, but did so more than seven calendar days and less than or equal to nine calendar days following the completion of Requirement R6. OR	The Transmission Owner notified the Transmission Operator that operates the primary control center as specified in Requirement R7, but did so more than nine calendar days and less than or equal to 11 calendar days following the completion of Requirement R6. OR	The Transmission Owner notified the Transmission Operator that operates the primary control center as specified in Requirement R7, but did so more than 11 calendar days and less than or equal to 13 calendar days following the completion of Requirement R6. OR	The Transmission Owner notified the Transmission Operator that operates the primary control center as specified in Requirement R7, but did so more than 13 calendar days following the completion of Requirement R6. OR The Transmission Owner failed to notify the Transmission

	Violation Severity Levels			
	Lower VSL	Moderate VSL	High VSL	Severe VSL
	The Transmission Owner notified the Transmission Operator that operates the primary control center of the removal from the identification in Requirement R5, but did so more than seven calendar days and less than or equal to nine calendar days following the verification or the subsequent risk assessment.	The Transmission Owner notified the Transmission Operator that operates the primary control center of the removal from the identification in Requirement R5, but did so more than nine calendar days and less than or equal to 11 calendar days following the verification or the subsequent risk assessment.	The Transmission Owner notified the Transmission Operator that operates the primary control center of the removal from the identification in Requirement R5, but did so more than 11 calendar days and less than or equal to 13 calendar days following the verification or the subsequent risk assessment.	Operator that it operates a control center identified in Requirement R5. OR The Transmission Owner notified the Transmission Operator that operates the primary control center of the removal from the identification in Requirement R5, but did so more than 13 calendar days following the verification or the subsequent risk assessment. OR The Transmission Owner failed to notify the Transmission Operator that operates the primary control center of the removal from the identification in Requirement R5.

	Violation Severity Levels			
	Lower VSL	Moderate VSL	High VSL	Severe VSL
R8.	N/A	The responsible entity conducted an evaluation of the potential physical threats and vulnerabilities to each of its Transmission station(s), Transmission substation(s), and primary control center(s) identified in Requirement R5, but failed to consider one of Parts 8.1 through 8.3 in the evaluation.	The responsible entity conducted an evaluation of the potential physical threats and vulnerabilities to each of its Transmission station(s), Transmission substation(s), and primary control center(s) identified in Requirement R5, but failed to consider two of Parts 8.1 through 8.3 in the evaluation.	The responsible entity failed to conduct an evaluation of the potential physical threats and vulnerabilities to each of its Transmission station(s), Transmission substation(s), and primary control center(s) identified in Requirement R5. OR The responsible entity conducted an evaluation of the potential physical threats and vulnerabilities to each of its Transmission station(s), Transmission substation(s), and primary control center(s) identified in Requirement R5, but failed to consider Parts 8.1 through 8.3.

	Violation Severity Levels			
	Lower VSL	Moderate VSL	High VSL	Severe VSL
R9.	The responsible entity developed and implemented a documented physical security plan(s) that covers each of its Transmission station(s), Transmission substation(s), and primary control center(s) identified in Requirement R5, but did so more than 120 calendar days, but less than or equal to 130 calendar days after completing Requirement R6. OR The responsible entity developed and implemented a documented physical security plan(s) that covers its Transmission station(s), Transmission substation(s), and primary control center(s) identified in Requirement R5 and verified according to Requirement R6, but failed to include one of Parts 9.1 through 9.4 in the plan.	The responsible entity developed and implemented a documented physical security plan(s) that covers each of its Transmission station(s), Transmission substation(s), and primary control center(s) identified in Requirement R5, but did so more than 130 calendar days, but less than or equal to 140 calendar days after completing Requirement R6. OR The responsible entity developed and implemented a documented physical security plan(s) that covers its Transmission station(s), Transmission substation(s), and primary control center(s) identified in Requirement R5 and verified according to Requirement R6, but failed to include two of Parts 9.1 through 9.4 in the plan.	The responsible entity developed and implemented a documented physical security plan(s) that covers each of its Transmission station(s), Transmission substation(s), and primary control center(s) identified in Requirement R5, but did so more than 140 calendar days, but less than or equal to 150 calendar days after completing Requirement R6. OR The responsible entity developed and implemented a documented physical security plan(s) that covers its Transmission station(s), Transmission substation(s), and primary control center(s) identified in Requirement R5 and verified according to Requirement R6, but failed to include three of Parts 9.1 through 9.4 in the plan.	The responsible entity developed and implemented a documented physical security plan(s) that covers each of its Transmission station(s), Transmission substation(s), and primary control center(s) identified in Requirement R5, but did so more than 150 calendar days after completing the verification in Requirement R6. OR The responsible entity failed to develop and implement a documented physical security plan(s) that covers its Transmission station(s), Transmission substation(s), and primary control center(s) identified in Requirement R5 and verified according to Requirement R6. OR The responsible entity developed and implemented a documented physical security plan(s) that covers its

	Violation Severity Levels			
	Lower VSL	Moderate VSL	High VSL	Severe VSL
				Transmission station(s), Transmission substation(s), and primary control center(s) identified in Requirement R5 and verified according to Requirement R6, but failed to include Parts 9.1 through 9.4 in the plan.
R10.	The responsible entity had an unaffiliated third party review the evaluation performed under Requirement R8 and the security plan(s) developed under Requirement R9, but did so in more than 90 calendar days, but less than or equal to 100 calendar days. OR The responsible entity had an unaffiliated third party review the evaluation performed under Requirement R8 and the security plan(s) developed under Requirement R9 and modified or documented the reason for not modifying the security plan(s) as specified in Part 10.3, but did so more than 70 calendar days and less than	The responsible entity had an unaffiliated third party review the evaluation performed under Requirement R8 and the security plan(s) developed under Requirement R9, but did so in more than 100 calendar days, but less than or equal to 110 calendar days. OR The responsible entity had an unaffiliated third party review the evaluation performed under Requirement R8 and the security plan(s) developed under Requirement R9 and modified or documented the reason for not modifying the security plan(s) as specified in Part 10.3, but did so more than 80 calendar days following	The responsible entity had an unaffiliated third party review the evaluation performed under Requirement R8 and the security plan(s) developed under Requirement R9, but did so more than 110 calendar days, but less than or equal to 120 calendar days. OR The responsible entity failed to have an unaffiliated third party review the evaluation performed under Requirement R8 and the security plan(s) developed under Requirement R9. OR The responsible entity had an unaffiliated third party review	The responsible entity failed to have an unaffiliated third party review the evaluation performed under Requirement R8 and the security plan(s) developed under Requirement R9 in more than 120 calendar days.

	Violation Severity Levels			
	Lower VSL	Moderate VSL	High VSL	Severe VSL
	or equal to 80 calendar days following completion of the third party review.	completion of the third party review. OR The responsible entity had an unaffiliated third party review the evaluation performed under Requirement R8 and the security plan(s) developed under Requirement R9, but did not document the reason for not modifying the security plan(s) as specified in Part 10.3.	the evaluation performed under Requirement R8 and the security plan(s) developed under Requirement R9, but failed to implement procedures for protecting information per Part 10.4.	

D. Regional Variances

None.

E. Interpretations

None.

F. Associated Documents

CIP-014-4 Implementation Plan

CIP-014-4 Technical Rationale Document

Version History

Version	Date	Action	Change Tracking
1	October 1, 2015	Effective Date	New
2	April 16, 2015	Revised to meet FERC Order 802 directive to remove “widespread”.	Revision
2	May 7, 2015	Adopted by the NERC Board of Trustees	
2	July 14, 2015	FERC Letter Order in Docket No. RD15-4-000 approving CIP-014-2	
3	January 19, 2022	Revised to remove Compliance Section 1.4	Revision
3	June 16, 2022	FERC Letter Order in Docket No. RD22-3-000 approving Modifications to CIP-014-3	Revision
3	June 16,2022	Effective Date	Revision
4	TBD	Revisions made by the Project 2023-06 drafting team	Revision

Attachment 1 – Applicability Criteria

Applicable Transmission station(s) or Transmission substation(s) are those that meet any of the following criteria:

1. Transmission Facilities operated at 500 kV or higher. For the purpose of this criterion, the collector bus for a generation plant is not considered a Transmission Facility, but is part of the generation interconnection Facility.

2. Transmission Facilities that are operating between 200 kV and 499 kV at a single station or substation, where the station or substation is connected at 200 kV or higher voltages to three or more other Transmission stations or substations and has an "aggregate weighted value" exceeding 3,000 according to the table below. The "aggregate weighted value" for a single station or substation is determined by summing the "weight value per line" shown in the table below for each incoming and each outgoing Bulk Electric System Transmission Line that is connected to another Transmission station or substation. For the purpose of this criterion, the collector bus for a generation plant is not considered a Transmission Facility, but is part of the generation interconnection Facility.

Voltage Value of a Line	Weight Value per Line
less than 200 kV (not applicable)	(not applicable)
200 kV to 299 kV	700
300 kV to 499 kV	1,300
500 kV and above	N/A

3. Transmission Facilities at a single station or substation location that are identified by their Reliability Coordinator, Planning Coordinator, or Transmission Planner as critical to the derivation of Interconnection Reliability Operating Limits (IROLs) and their associated contingencies.

4. Transmission Facilities identified as essential to meeting Nuclear Plant Interface Requirements (NPIRs).

Standard Development Timeline

This section is maintained by the drafting team during the development of the standard and will be removed when the standard is adopted by the NERC Board of Trustees (Board).

Description of Current Draft

CIP-014-4 is posted for a 45-day formal comment period with additional ballot.

Completed Actions	Date
Standards Committee approved Standard Authorization Request (SAR) for posting	June 21, 2023
SAR posted for comment	July 26, 2023 – August 24, 2023
Accepted Revised SAR	January 17, 2024
45-day formal or informal comment period with ballot	May 20, 2024 – July 3, 2024
45-day formal or informal comment period with additional ballot	September 23, 2024 – November 6, 2024
45-day formal comment period with additional ballot	June 6, 2025 – July 21, 2025

Anticipated Actions	Date
45-day formal comment period with additional ballot	March 31, 2026 – May 14, 2026
10-day final ballot	May 27, 2026 – June 5, 2026
Board adoption	October 8, 2026

New or Modified Term(s) Used in NERC Reliability Standards

This section includes all new or modified terms used in the proposed standard that will be included in the *Glossary of Terms Used in NERC Reliability Standards* upon applicable regulatory approval. Terms used in the proposed standard that are already defined and are not being modified can be found in the *Glossary of Terms Used in NERC Reliability Standards*. The new or revised terms listed below will be presented for approval along with the proposed standard. Upon Board adoption, this section will be removed.

Term(s):

None.

A. Introduction

1. **Title:** Physical Security

2. **Number:** CIP-014-4

3. **Purpose:** To identify and protect Transmission stations and Transmission substations, and their associated primary control centers, that if rendered inoperable or damaged due to a physical attack, could ~~cause~~result in instability, uncontrolled separation, or Cascading within an Interconnection.

4. **Applicability:**

   4.1. Functional Entities:

   4.1.1. Transmission Owner that owns or jointly owns one or more Transmission stations or Transmission substations that meet the applicability criteria of Attachment 1.

   4.1.2. Transmission Operator

   Exemption: Facilities in a "protected area," as defined in 10 C.F.R. § 73.2, within the scope of a security plan approved or accepted by the Nuclear Regulatory Commission ~~(NRC)~~ are not subject to this Standard; or Facilities within the scope of a security plan approved or accepted by the Canadian Nuclear Safety Commission are not subject to this Reliability Standard.

5. **Effective Date:** See Implementation Plan for CIP-014-4.

B. Requirements and Measures

R1. Each Transmission Owner shall, at least once every 36 calendar months, ~~shall~~ identify each applicable Transmission station and Transmission substation meeting any of the criteria in Attachment 1 that is either existing or planned to be in service within 36 calendar months. *[Violation Risk Factor: High; Time-Horizon: Long-term Planning]*

M1. Examples of evidence may include, but are not limited to, dated written or electronic documentation of the Transmission station(s) and Transmission substation(s) (existing and those planned to be in service within 36 calendar months) that meet any of the criteria in Attachment 1.

R2. Each Transmission Owner with applicable Transmission station(s) or Transmission substation(s) identified in Requirement R1 shall identify proximate existing Bulk Electric System Transmission station(s) and Bulk Electric System Transmission substation(s), irrespective of ownership, within 1500 feet or 457 meters (the shortest distance, measured substation fence line to substation fence line) of an applicable Transmission station or Transmission substation identified in Requirement R1. *[Violation Risk Factor: Medium; Time-Horizon: Long-term Planning]*

M2. Examples of evidence may include, but are not limited to, dated written or electronic documentation of the Bulk Electric System Transmission stations or Bulk Electric System Transmission substations ~~determined~~identified in Requirement R2.

R3. Each Transmission Owner shall have a documented risk assessment methodology for evaluating the loss of each applicable Transmission station or Transmission substation identified in Requirement R1. The methodology shall include, at a minimum, the following: *[Violation Risk Factor: High; Time-Horizon: Long-term Planning]*

3.1. Documented criteria for assessing instability, uncontrolled separation, or Cascading within an Interconnection. The criteria shall include, at a minimum, technically justified thresholds identifying unacceptable generation and load loss within an Interconnection.

3.2. A provision that steady-state and dynamic simulations shall each be performed using at a minimum one System peak Load case and ~~a~~one System Off-Peak Load case.

~~**3.3.** A specification for Fault simulations, including:~~

3.3. ~~• For~~Specifications for simulations at each applicable Transmission station or Transmission substation ~~listed~~identified in accordance with Requirement R1 and, ~~a Fault at the~~if applicable ~~Transmission station or Transmission substation.~~

~~•~~, at ~~For~~ each associated proximate existing Bulk Electric System Transmission station ~~or~~(s) and Bulk Electric System Transmission substation ~~determined~~(s) identified in accordance with Requirement R2 ~~as being in proximity to an applicable Transmission~~

~~station or Transmission substation, Faults at both the applicable and proximate Transmission station(s) or Transmission substation(s).~~, that include:

~~**3.4.** A specification that Fault simulations assume the loss of communication and Protection Systems at the applicable Transmission station(s) or Transmission substation(s) prior to or simultaneous with the Fault(s) studied under Requirement R3, Parts 3.3.1 and 3.3.2.~~

3.3.1. At the applicable Transmission station or Transmission substation:

3.3.1.1. Prior loss of communication and Protection Systems;

3.3.1.2. Application of a Fault or Faults; and

3.3.1.3. Delayed (remote) clearing times shall be used unless otherwise technically substantiated.

3.3.2. At each proximate existing Bulk Electric System Transmission station(s) and Bulk Electric System Transmission substation(s), as applicable:

3.3.2.1. Application of a Fault or Faults, either simultaneous with or following the Fault or Faults applied under Part 3.3.1.2; and

3.3.2.2. Normal clearing times shall be used unless otherwise technically substantiated.

3.3.3. A documented justification for the Fault(s) associated with physical attack to be simulated. A single justification may be used for multiple locations. The justification shall include at a minimum:

3.3.3.1. The type of credible high-severity physical attack considered; and

3.3.3.2. The type of Fault(s) selected based upon the attack considered.

~~•~~ **~~3.3.4.~~** Removal of all Elements that Protection Systems and other controls are expected to automatically disconnect~~ for each event~~.

~~• Delayed (remote) clearing times shall be used unless otherwise technically substantiated.~~

~~•~~ **~~3.3.5.~~** Actual or more conservative clearing times shall be used~~ unless otherwise technically substantiated~~.

M3. Each Transmission Owner shall provide dated evidence, such as electronic or hard copies, of a risk assessment methodology satisfying Requirement R3.

R4. Each Transmission Owner with applicable Transmission station(s) and Transmission substation(s) identified in Requirement R1 ~~containing Bulk Electric System (BES) Elements~~jointly owned by multiple Transmission Owners shall coordinate with each appropriate Transmission Owner(s) to determine and document their individual and

joint responsibilities ~~for documenting a risk assessment methodology~~ under Requirement R3 and ~~for performing any required risk assessments per~~ Requirement R5. *[Violation Risk Factor: Medium; Time-Horizon: Operations Planning, Long-term Planning]*

M4. Examples of acceptable evidence may include, but are not limited to, dated documentation, such as meeting minutes, agreements, and email correspondence, that identifies that agreement has been reached on individual and joint responsibilities for performing the required risk assessments.

R5. At least once every 36 calendar months, each Transmission Owner shall perform a risk assessment to identify applicable Transmission station(s) and Transmission substation(s) identified in Requirement R1, that if rendered inoperable or damaged could result in instability, uncontrolled separation, or Cascading within an Interconnection, using the methodology established in Requirement R3~~, including any~~. Jointly owned Transmission station(s) and Transmission substation(s) ~~identified in accordance with~~shall be assessed according to the responsibilities documented under Requirement R4. If proximate Bulk Electric System Transmission station(s) and Bulk Electric System Transmission substation(s) were identified in Requirement R2, they ~~should also~~shall be included in the risk assessment according to Requirement R3, Part 3.3. *[Violation Risk Factor: High; Time-Horizon: Operations Planning, Long-term Planning]*

5.1. ~~During the current~~If during a risk assessment, a Transmission station or Transmission substation is identified in either the dynamic or steady-state simulation as causing instability, uncontrolled separation, or Cascading within an Interconnection when rendered inoperable or damaged ~~requires~~, then no further simulation is required.

5.2. If a previous risk assessment has identified a Transmission station or Transmission substation as causing instability, uncontrolled separation, or Cascading within an Interconnection when rendered inoperable or damaged, then the Transmission Owner may forgo additional assessments on that Transmission station or Transmission substation. Requirement R5, Part 5.3 and Requirement R7 through Requirement R10 still apply to that Transmission station or Transmission substation until a new risk assessment demonstrates otherwise.

5.3. The Transmission Owner shall identify the primary control center that operationally controls each Transmission station or Transmission substation identified as causing instability, uncontrolled separation, or Cascading within an Interconnection when rendered inoperable or damaged in the Requirement R5 risk assessment.

M5. Examples of acceptable evidence may include, but are not limited to, dated written or electronic documentation of the risk assessment satisfying Requirement R5 including

the identified Transmission station(s) or Transmission substation(s). For Requirement R5, Part 5.3, examples of acceptable evidence may include, but are not limited to, dated written or electronic documentation of the identification of the primary control center that operationally controls each identified Transmission station or Transmission substation.

R6. Each Transmission Owner shall have an unaffiliated third party verify the risk assessment performed under Requirement R5. The verification may occur concurrently with or after the risk assessment performed under Requirement R5. *[Violation Risk Factor: Medium; Time-Horizon: Long-term Planning]*

6.1. Each Transmission Owner shall select an unaffiliated verifying entity that is either:

- A registered Planning Coordinator, Transmission Planner, or Reliability Coordinator; or
- An entity that has transmission planning or analysis experience.

6.2. The unaffiliated third-party verification shall verify the Transmission Owner's risk assessment performed under Requirement R5, which may include recommendations for the addition or deletion of a Transmission station(s) or Transmission substation(s). The Transmission Owner shall ensure the verification is completed within 90 calendar days following the completion of the Requirement R5 risk assessment.

6.3. If the unaffiliated verifying entity recommends that the Transmission Owner add a Transmission station(s) or Transmission substation(s) to, or remove a Transmission station or Transmission substation from, its identification under Requirement R5, the Transmission Owner shall either, within 60 calendar days of completion of the verification, for each recommended addition or removal of a Transmission station or Transmission substation:

- Modify its identification under Requirement R5 consistent with the recommendation; or
- Document the technical basis for not modifying the identification in accordance with the recommendation.

6.4. Each Transmission Owner shall implement procedures, such as the use of non-disclosure agreements, for protecting sensitive or confidential information made available to the unaffiliated third-party verifier and to protect or exempt sensitive or confidential information developed pursuant to this Reliability Standard from public disclosure.

M6. Examples of acceptable evidence may include, but are not limited to, dated written or electronic documentation that the Transmission Owner completed an unaffiliated third party verification of the Requirement R5 risk assessment and satisfied all of the applicable provisions of Requirement R6, including, if applicable, documenting the technical basis for not modifying the identification in Requirements R1, R2, R3, R4, and

R5 as specified under Part 6.3. Additionally, examples of evidence may include, but are not limited to, written or electronic documentation of procedures to protect information under Part 6.4.

R7. For a primary control center(s) identified by the Transmission Owner according to Requirement R5, Part ~~5.2~~5.3 that a) operationally controls an identified Transmission station or Transmission substation verified according to Requirement R6, and b) is not under the operational control of the Transmission Owner: the Transmission Owner shall, within seven calendar days following completion of Requirement R6, notify the Transmission Operator that has operational control of the primary control center of such identification and the date of completion of Requirement R6. *[Violation Risk Factor: Lower; Time-Horizon: Long-term Planning]*

7.1. If a Transmission station or Transmission substation previously identified under Requirements R1~~, R2, R3, R4,~~ and R5 and verified according to Requirement R6 is removed from the identification during a subsequent risk assessment performed according to Requirement R5 or a verification according to Requirement R6, then the Transmission Owner shall, within seven calendar days following the verification or the subsequent risk assessment, notify the Transmission Operator that has operational control of the primary control center of the removal.

M7. Examples of acceptable evidence may include, but are not limited to, written or electronic notifications or communications that the Transmission Owner notified each Transmission Operator, as applicable, according to Requirement R7.

R8. Each Transmission Owner that identified a Transmission station, Transmission substation, or a primary control center in Requirement R5 and verified according to Requirement R6, and each Transmission Operator notified by a Transmission Owner according to Requirement R7, shall conduct an evaluation of the potential threats and vulnerabilities of a physical attack to each of their respective Transmission station(s), Transmission substation(s), and primary control center(s) identified in Requirement R5 and verified according to Requirement R6. The evaluation shall consider the following: *[Violation Risk Factor: Medium; Time-Horizon: Operations Planning, Long-term Planning]*

8.1. Unique characteristics of the identified and verified Transmission station(s), Transmission substation(s), and primary control center(s);

8.2. Prior history of attack(s) on similar facilities taking into account the frequency, geographic proximity, and severity of past physical security related events; and

8.3. Intelligence or threat warnings received from sources such as law enforcement, the Electric Reliability Organization (ERO), the Electricity Sector Information Sharing and Analysis Center (E-ISAC), U.S. federal and/or Canadian governmental agencies, or their successors.

M8. Examples of evidence may include, but are not limited to, dated written or electronic documentation that the Transmission Owner or Transmission Operator conducted an evaluation of the potential threats and vulnerabilities of a physical attack to their respective Transmission station(s), Transmission substation(s), and primary control center(s) as specified in Requirement R8.

R9. Each Transmission Owner that identified a Transmission station, Transmission substation, or primary control center in Requirement R5 and verified according to Requirement R6, and each Transmission Operator notified by a Transmission Owner according to Requirement R7, shall develop and implement a documented physical security plan(s) that covers their respective Transmission station(s), Transmission substation(s), and primary control center(s). The physical security plan(s) shall be developed within 120 calendar days following the completion of Requirement R6 and executed according to the timeline specified in the physical security plan(s). The physical security plan(s) shall include the following attributes: [*Violation Risk Factor*: *High; Time-Horizon: Long-term Planning*]

9.1. Resiliency or security measures designed collectively to deter, detect, delay, assess, communicate, and respond to potential physical threats and vulnerabilities identified during the evaluation conducted in Requirement R8.

9.2. Law enforcement contact and coordination information.

9.3. A timeline for executing the physical security enhancements and modifications specified in the physical security plan.

9.4. Provisions to evaluate evolving physical threats, and their corresponding security measures, to the Transmission station(s), Transmission substation(s), or primary control center(s).

M9. Examples of evidence may include, but are not limited to, dated written or electronic documentation of its physical security plan(s) that covers their respective identified and verified Transmission station(s), Transmission substation(s), and primary control center(s) as specified in Requirement R6, and additional evidence demonstrating execution of the physical security plan according to the timeline specified in the physical security plan.

R10. Each Transmission Owner that identified a Transmission station, Transmission substation, or primary control center in Requirement R5 and verified according to Requirement R6, and each Transmission Operator notified by a Transmission Owner according to Requirement R7, shall have an unaffiliated third party review the evaluation performed under Requirement R8 and the security plan(s) developed under Requirement R9. The review may occur concurrently with or after completion of the evaluation performed under Requirement R8 and the security plan development under Requirement R9. *[Violation Risk Factor: Medium; Time-Horizon: Long-term Planning]*

10.1. Each Transmission Owner and Transmission Operator shall select an unaffiliated third-party reviewer from the following:

- An entity or organization with electric industry physical security experience and whose review staff has at least one member who holds either a Certified Protection Professional (CPP) or Physical Security Professional (PSP) certification;
- An entity or organization approved by the ERO;
- A governmental agency with physical security expertise; or
- An entity or organization with demonstrated law enforcement, government, or military physical security expertise.

10.2. The Transmission Owner or Transmission Operator, respectively, shall ensure that the unaffiliated third-party review is completed within 90 calendar days of completing the security plan(s) developed in Requirement R9. The unaffiliated third-party review may, but is not required to, include recommended changes to the evaluation performed under Requirement R8 or the security plan(s) developed under Requirement R9.

10.3. If the unaffiliated third-party reviewer recommends changes to the evaluation performed under Requirement R8 or security plan(s) developed under Requirement R9, the Transmission Owner or Transmission Operator shall, within 60 calendar days of the completion of the unaffiliated third party review, for each recommendation:

- Modify its evaluation or security plan(s) consistent with the recommendation; or
- Document the reason(s) for not modifying the evaluation or security plan(s) consistent with the recommendation.

10.4. Each Transmission Owner and Transmission Operator shall implement procedures, such as the use of non-disclosure agreements, for protecting sensitive or confidential information made available to the unaffiliated third-party reviewer and to protect or exempt sensitive or confidential information developed pursuant to this Reliability Standard from public disclosure.

M10. Examples of evidence may include, but are not limited to, written or electronic documentation that the Transmission Owner or Transmission Operator had an unaffiliated third party review the evaluation performed under Requirement R8 and the security plan(s) developed under Requirement R9 as specified in Requirement R10 including, if applicable, documenting the reasons for not modifying the evaluation or security plan(s) in accordance with a recommendation under Part 10.3. Additionally, examples of evidence may include, but are not limited to, written or electronic documentation of procedures to protect information under Part 10.4.

C. Compliance

1. Compliance Monitoring Process

1.1. Compliance Enforcement Authority: "Compliance Enforcement Authority" ~~(CEA)~~ means NERC or the Regional Entity in their respective roles of monitoring and enforcing compliance with the NERC Reliability Standards.

1.2. Evidence Retention: The following evidence retention period(s) identify the period of time an entity is required to retain specific evidence to demonstrate compliance. For instances where the evidence retention period specified below is shorter than the time since the last audit, the Compliance Enforcement Authority ~~CEA~~ may ask an entity to provide other evidence to show that it was compliant for the full-time period since the last audit.

The Transmission Owner and Transmission Operator shall keep data or evidence to show compliance, as identified below, unless directed by its Compliance Enforcement Authority ~~CEA~~ to retain specific evidence for a longer period of time as part of an investigation:

The responsible entities shall retain evidence, as per Requirements R1 through R10, for three years.

If a Responsible Entity is found non-compliant, it shall keep information related to the non-compliance until mitigation is complete and approved, or for the time specified above, whichever is longer.

The CEA shall keep the last audit records and all requested and submitted subsequent audit records.

1.3. Compliance Monitoring and Enforcement Program: "Compliance Monitoring Enforcement Program" or "CMEP" means, depending on the context (1) the NERC Compliance Monitoring and Enforcement Program (Appendix 4C to the NERC Rules of Procedure) or the Commission-approved program of a Regional Entity, as applicable, or (2) the program, department or organization within NERC or a Regional Entity that is responsible for performing compliance monitoring and enforcement activities with respect to Registered Entities' compliance with Reliability Standards.

Violation Severity Levels

	Violation Severity Levels			
	Lower VSL	**Moderate VSL**	**High VSL**	**Severe VSL**
R1.	The Transmission Owner identified each applicable Transmission station(s) ~~or~~ and Transmission substation(s) per Attachment 1, but did so after 36 calendar months, but less than or equal to 38 calendar months. OR The Transmission Owner identified each applicable Transmission station(s) ~~or~~ and Transmission substation(s), but failed to identify less than or equal to 10% of the applicable Transmission station(s) ~~or~~ and Transmission substation(s) per Attachment 1.	The Transmission Owner identified each applicable Transmission station(s) ~~or~~ and Transmission substation(s) per Attachment 1, but did so after 38 calendar months, but less than or equal to 40 calendar months. OR The Transmission Owner identified each applicable Transmission station(s) ~~or~~ and Transmission substation(s), but failed to identify more than 10% and less than or equal to 20% of the applicable Transmission station(s) ~~or~~ and Transmission substation(s) per Attachment 1.	The Transmission Owner identified each applicable Transmission station(s) ~~or~~ and Transmission substation(s) per Attachment 1, but did so after 40 calendar months, but less than or equal to 42 calendar months. OR The Transmission Owner identified each applicable Transmission station(s) ~~or~~ and Transmission substation(s), but failed to identify more than 20% and less than or equal to 30% of the applicable Transmission station(s) ~~or~~ and Transmission substation(s) per Attachment 1.	The Transmission Owner failed to identify each applicable Transmission station(s) ~~or~~ and Transmission substation(s) per Attachment 1. OR The Transmission Owner identified each applicable Transmission station(s) ~~or~~ and Transmission substation(s) per Attachment 1, but did so after more than 42 calendar months. OR The Transmission Owner identified each applicable Transmission station(s) ~~or~~ and Transmission substation(s), but failed to identify more than 30% of the applicable Transmission station(s) ~~or~~ and Transmission substation(s) per Attachment 1.

	Violation Severity Levels			
	Lower VSL	Moderate VSL	High VSL	Severe VSL
R2.	N/A	N/A	N/A	The Transmission Owner with applicable Transmission station(s) or Transmission substation(s) identified in Requirement R1 did not identify ~~proximate~~existing Bulk Electric System Transmission station(s) and Bulk Electric System Transmission substation(s), irrespective of ownership, within 1500 feet or 457 meters (the shortest distance, measured substation fence line to substation fence line) of an applicable Transmission station or Transmission substation identified in Requirement R1.
R3.	~~The Transmission Owner has a risk assessment methodology that failed to include one of the requirements listed in Parts 3.1 through 3.4.~~N/A	The Transmission Owner has a risk assessment methodology that failed to include ~~two~~one of the requirements listed in Parts 3.1 through ~~3.4~~3.3.	The Transmission Owner has a risk assessment methodology that failed to include ~~three~~two of the requirements listed in Parts 3.1 through ~~3.4~~3.3.	The Transmission Owner has a risk assessment methodology that failed to include ~~four~~all three of the requirements listed in Parts 3.1 through ~~3.4~~3.3. OR The Transmission Owner does not have a risk assessment methodology.

	Violation Severity Levels			
	Lower VSL	Moderate VSL	High VSL	Severe VSL
R4.	The Transmission Owner with applicable Transmission station(s) and Transmission substation(s) identified in Requirement R1 ~~containing Bulk Electric System (BES) Elements~~ owned by multiple Transmission Owners failed to coordinate with each appropriate Transmission Owner(s) to determine and document their individual and joint responsibilities for documenting a risk assessment methodology under Requirement R3 and for performing any required risk assessments per Requirement R5 for less than or equal to 25% of jointly owned applicable Transmission station(s) and Transmission substation(s).	The Transmission Owner with applicable Transmission station(s) and Transmission substation(s) identified in Requirement R1 ~~containing Bulk Electric System (BES) Elements~~ owned by multiple Transmission Owners failed to coordinate with each appropriate Transmission Owner(s) to determine and document their individual and joint responsibilities for documenting a risk assessment methodology under Requirement R3 and for performing any required risk assessments per Requirement R5 for more than 25% and less than or equal to 50% of jointly owned applicable Transmission station(s) and Transmission substation(s).	The Transmission Owner with applicable Transmission station(s) and Transmission substation(s) identified in Requirement ~~R1 containing Bulk Electric System (BES) Elements~~ owned by multiple Transmission Owners failed to coordinate with each appropriate Transmission Owner(s) to determine and document their individual and joint responsibilities for documenting a risk assessment methodology under Requirement R3 and for performing any required risk assessments per Requirement R5 for more than 50% and less than or equal to 75% of jointly owned applicable Transmission station(s) and Transmission substation(s).	The Transmission Owner with applicable Transmission station(s) and Transmission substation(s) identified in Requirement R1 ~~containing Bulk Electric System (BES) Elements~~ owned by multiple Transmission Owners failed to coordinate with each appropriate Transmission Owner(s) to determine and document their individual and joint responsibilities for documenting a risk assessment methodology under Requirement R3 and for performing any required risk assessments per Requirement R5 for more than 75% and less than or equal to 100% of any evidence for ~~of~~ jointly owned applicable Transmission station(s) and Transmission substation(s).
R5.	The Transmission Owner performed a risk assessment, but did so after 36 calendar months, but less than or equal to 38 calendar months.	The Transmission Owner performed a risk assessment, but did so after 38 calendar months, but less than or equal to 40 calendar months.	The Transmission Owner performed a risk assessment, but did so after 40 calendar months, but less than or equal to 42 calendar months.	The Transmission Owner performed a risk assessment, but did so after more than 42 calendar months.

	Violation Severity Levels			
	Lower VSL	Moderate VSL	High VSL	Severe VSL
	~~OR~~ ~~The Transmission Owner performed a risk assessment inconsistent with one of the methodology requirements listed in Requirement R3, Parts 3.1 through 3.4.~~	OR The Transmission Owner performed a risk assessment inconsistent with ~~two~~one of the methodology requirements listed in Requirement R3, Parts 3.1 through ~~3.4~~3.3.	OR The Transmission Owner performed a risk assessment inconsistent with ~~three~~two of the methodology requirements listed in Requirement R3, Parts 3.1 through ~~3.4~~3.3. OR The Transmission Owner performed a risk assessment, but failed to include the primary control center identified in Part 5.2.	OR The Transmission Owner performed a risk assessment inconsistent with ~~four~~all three of the methodology requirements listed in Requirement R3, Parts 3.1 through ~~3.4~~3.3.
R6.	The Transmission Owner had an unaffiliated third party verify the risk assessment performed under Requirement R5, but did so in more than 90 calendar days, but less than or equal to 100 calendar days following completion of Requirement R5. OR The Transmission Owner had an unaffiliated third party verify the risk assessment performed under Requirement	The Transmission Owner had an unaffiliated third party verify the risk assessment performed under Requirement R5, but did so more than 100 calendar days, but less than or equal to 110 calendar days following completion of Requirement R5. OR The Transmission Owner had an unaffiliated third party verify the risk assessment performed under Requirement R5 and modified or documented the	The Transmission Owner had an unaffiliated third party verify the risk assessment performed under Requirement R5, but did so more than 110 calendar days, but less than or equal to 120 calendar days following completion of Requirement R5. OR The Transmission Owner had an unaffiliated third party verify the risk assessment performed under Requirement	The Transmission Owner had an unaffiliated third party verify the risk assessment performed under Requirement R5, but did so more than 120 calendar days following completion of Requirement R5. OR The Transmission Owner failed to have an unaffiliated third party verify the risk assessment performed under Requirement R5.

	Violation Severity Levels			
	Lower VSL	Moderate VSL	High VSL	Severe VSL
	R5 and modified or documented the technical basis for not modifying its identification under Requirement R5 as required by Part6.3, but did so more than 60 calendar days and less than or equal to 70 calendar days from completion of the third party verification.	technical basis for not modifying its identification under Requirement R5 as required by Part 6.3, but did so more than 70 calendar days and less than or equal to 80 calendar days from completion of the third party verification.	R5 and modified or documented the technical basis for not modifying its identification under Requirement R5 as required by Part 6.3, but did so more than 80 calendar days from completion of the third party verification. OR The Transmission Owner had an unaffiliated third party verify the risk assessment performed under Requirement R5, but failed to modify or document the technical basis for not modifying its identification under R4 as required by Part 6.3.	OR The Transmission Owner had an unaffiliated third party verify the risk assessment performed under Requirement R5, but failed to implement procedures for protecting information per Part 6.4.
R7.	The Transmission Owner notified the Transmission Operator that operates the primary control center as specified in Requirement R7, but did so more than seven calendar days and less than or equal to nine calendar days	The Transmission Owner notified the Transmission Operator that operates the primary control center as specified in Requirement R7, but did so more than nine calendar days and less than or equal to 11 calendar days	The Transmission Owner notified the Transmission Operator that operates the primary control center as specified in Requirement R7, but did so more than 11 calendar days and less than or equal to 13 calendar days	The Transmission Owner notified the Transmission Operator that operates the primary control center as specified in Requirement R7, but did so more than 13 calendar days following the completion of Requirement R6.

	Violation Severity Levels			
	Lower VSL	Moderate VSL	High VSL	Severe VSL
	following the completion of Requirement R6. OR The Transmission Owner notified the Transmission Operator that operates the primary control center of the removal from the identification in Requirement R5, but did so more than seven calendar days and less than or equal to nine calendar days following the verification or the subsequent risk assessment.	following the completion of Requirement R6. OR The Transmission Owner notified the Transmission Operator that operates the primary control center of the removal from the identification in Requirement R5, but did so more than nine calendar days and less than or equal to 11 calendar days following the verification or the subsequent risk assessment.	following the completion of Requirement R6. OR The Transmission Owner notified the Transmission Operator that operates the primary control center of the removal from the identification in Requirement R5, but did so more than 11 calendar days and less than or equal to 13 calendar days following the verification or the subsequent risk assessment.	OR The Transmission Owner failed to notify the Transmission Operator that it operates a control center identified in Requirement R5. OR The Transmission Owner notified the Transmission Operator that operates the primary control center of the removal from the identification in Requirement R5, but did so more than 13 calendar days following the verification or the subsequent risk assessment. OR The Transmission Owner failed to notify the Transmission Operator that operates the primary control center of the removal from the identification in Requirement R5.

	Violation Severity Levels			
	Lower VSL	Moderate VSL	High VSL	Severe VSL
R8.	N/A	The responsible entity conducted an evaluation of the potential physical threats and vulnerabilities to each of its Transmission station(s), Transmission substation(s), and primary control center(s) identified in Requirement R5, but failed to consider one of Parts 8.1 through 8.3 in the evaluation.	The responsible entity conducted an evaluation of the potential physical threats and vulnerabilities to each of its Transmission station(s), Transmission substation(s), and primary control center(s) identified in Requirement R5, but failed to consider two of Parts 8.1 through 8.3 in the evaluation.	The responsible entity failed to conduct an evaluation of the potential physical threats and vulnerabilities to each of its Transmission station(s), Transmission substation(s), and primary control center(s) identified in Requirement R5. OR The responsible entity conducted an evaluation of the potential physical threats and vulnerabilities to each of its Transmission station(s), Transmission substation(s), and primary control center(s) identified in Requirement R5, but failed to consider Parts 8.1 through 8.3.

	Violation Severity Levels			
	Lower VSL	Moderate VSL	High VSL	Severe VSL
R9.	The responsible entity developed and implemented a documented physical security plan(s) that covers each of its Transmission station(s), Transmission substation(s), and primary control center(s) identified in Requirement R5, but did so more than 120 calendar days, but less than or equal to 130 calendar days after completing Requirement R6. OR The responsible entity developed and implemented a documented physical security plan(s) that covers its Transmission station(s), Transmission substation(s), and primary control center(s) identified in Requirement R5 and verified according to Requirement R6, but failed to include one of Parts 9.1 through 9.4 in the plan.	The responsible entity developed and implemented a documented physical security plan(s) that covers each of its Transmission station(s), Transmission substation(s), and primary control center(s) identified in Requirement R5, but did so more than 130 calendar days, but less than or equal to 140 calendar days after completing Requirement R6. OR The responsible entity developed and implemented a documented physical security plan(s) that covers its Transmission station(s), Transmission substation(s), and primary control center(s) identified in Requirement R5 and verified according to Requirement R6, but failed to include two of Parts 9.1 through 9.4 in the plan.	The responsible entity developed and implemented a documented physical security plan(s) that covers each of its Transmission station(s), Transmission substation(s), and primary control center(s) identified in Requirement R5, but did so more than 140 calendar days, but less than or equal to 150 calendar days after completing Requirement R6. OR The responsible entity developed and implemented a documented physical security plan(s) that covers its Transmission station(s), Transmission substation(s), and primary control center(s) identified in Requirement R5 and verified according to Requirement R6, but failed to include three of Parts 9.1 through 9.4 in the plan.	The responsible entity developed and implemented a documented physical security plan(s) that covers each of its Transmission station(s), Transmission substation(s), and primary control center(s) identified in Requirement R5, but did so more than 150 calendar days after completing the verification in Requirement R6. OR The responsible entity failed to develop and implement a documented physical security plan(s) that covers its Transmission station(s), Transmission substation(s), and primary control center(s) identified in Requirement R5 and verified according to Requirement R6. OR The responsible entity developed and implemented a documented physical security plan(s) that covers its

	Violation Severity Levels			
	Lower VSL	Moderate VSL	High VSL	Severe VSL
				Transmission station(s), Transmission substation(s), and primary control center(s) identified in Requirement R5 and verified according to Requirement R6, but failed to include Parts 9.1 through 9.4 in the plan.
R10.	The responsible entity had an unaffiliated third party review the evaluation performed under Requirement R8 and the security plan(s) developed under Requirement R9, but did so in more than 90 calendar days, but less than or equal to 100 calendar days. OR The responsible entity had an unaffiliated third party review the evaluation performed under Requirement R8 and the security plan(s) developed under Requirement R9 and modified or documented the reason for not modifying the security plan(s) as specified in Part 10.3, but did so more than 70 calendar days and less than	The responsible entity had an unaffiliated third party review the evaluation performed under Requirement R8 and the security plan(s) developed under Requirement R9, but did so in more than 100 calendar days, but less than or equal to 110 calendar days. OR The responsible entity had an unaffiliated third party review the evaluation performed under Requirement R8 and the security plan(s) developed under Requirement R9 and modified or documented the reason for not modifying the security plan(s) as specified in Part 10.3, but did so more than 80 calendar days following	The responsible entity had an unaffiliated third party review the evaluation performed under Requirement R8 and the security plan(s) developed under Requirement R9, but did so more than 110 calendar days, but less than or equal to 120 calendar days. OR The responsible entity failed to have an unaffiliated third party review the evaluation performed under Requirement R8 and the security plan(s) developed under Requirement R9. OR The responsible entity had an unaffiliated third party review	The responsible entity failed to have an unaffiliated third party review the evaluation performed under Requirement R8 and the security plan(s) developed under Requirement R9 in more than 120 calendar days.

	Violation Severity Levels			
	Lower VSL	Moderate VSL	High VSL	Severe VSL
	or equal to 80 calendar days following completion of the third party review.	completion of the third party review. OR The responsible entity had an unaffiliated third party review the evaluation performed under Requirement R8 and the security plan(s) developed under Requirement R9, but did not document the reason for not modifying the security plan(s) as specified in Part 10.3.	the evaluation performed under Requirement R8 and the security plan(s) developed under Requirement R9, but failed to implement procedures for protecting information per Part 10.4.	

D. Regional Variances

None.

E. Interpretations

None.

F. Associated Documents

CIP-014-4 Implementation Plan

CIP-014-4 Technical Rationale Document

Version History

Version	Date	Action	Change Tracking
1	October 1, 2015	Effective Date	New
2	April 16, 2015	Revised to meet FERC Order 802 directive to remove “widespread”.	Revision
2	May 7, 2015	Adopted by the NERC Board of Trustees	
2	July 14, 2015	FERC Letter Order in Docket No. RD15-4-000 approving CIP-014-2	
3	January 19, 2022	Revised to remove Compliance Section 1.4	Revision
3	June 16, 2022	FERC Letter Order in Docket No. RD22-3-000 approving Modifications to CIP-014-3	Revision
3	June 16,2022	Effective Date	Revision
4	TBD	Revisions made by the Project 2023-06 drafting team	Revision

Attachment 1 – Applicability Criteria

Applicable Transmission station(s) or Transmission substation(s) are those that meet any of the following criteria:

1. Transmission Facilities operated at 500 kV or higher. For the purpose of this criterion, the collector bus for a generation plant is not considered a Transmission Facility, but is part of the generation interconnection Facility.

2. Transmission Facilities that are operating between 200 kV and 499 kV at a single station or substation, where the station or substation is connected at 200 kV or higher voltages to three or more other Transmission stations or substations and has an "aggregate weighted value" exceeding 3,000 according to the table below. The "aggregate weighted value" for a single station or substation is determined by summing the "weight value per line" shown in the table below for each incoming and each outgoing Bulk Electric System~~BES~~ Transmission Line that is connected to another Transmission station or substation. For the purpose of this criterion, the collector bus for a generation plant is not considered a Transmission Facility, but is part of the generation interconnection Facility.

Voltage Value of a Line	Weight Value per Line
less than 200 kV (not applicable)	(not applicable)
200 kV to 299 kV	700
300 kV to 499 kV	1,300
500 kV and above	N/A

3. Transmission Facilities at a single station or substation location that are identified by ~~its~~ their Reliability Coordinator, Planning Coordinator, or Transmission Planner as critical to the derivation of Interconnection Reliability Operating Limits (IROLs) and their associated contingencies.

4. Transmission Facilities identified as essential to meeting Nuclear Plant Interface Requirements (NPIRs).

Standard Development Timeline

This section is maintained by the drafting team during the development of the standard and will be removed when the standard is adopted by the NERC Board of Trustees (Board).

Description of Current Draft

CIP-014-4 is posted for a 45-day formal comment period with additional ballot.

Completed Actions	Date
Standards Committee approved Standard Authorization Request (SAR) for posting	June 21, 2023
SAR posted for comment	July 26, 2023 – August 24, 2023
Accepted Revised SAR	January 17, 2024
45-day formal or informal comment period with ballot	May 20, 2024 – July 3, 2024
45-day formal or informal comment period with additional ballot	September 23, 2024 – November 6, 2024
45-day formal comment period with additional ballot	June 6, 2025 – July 21, 2025

Anticipated Actions	Date
45-day formal comment period with additional ballot	March 31, 2026 – May 14, 2026
10-day final ballot	May 27, 2026 – June 5, 2026
Board adoption	October 8, 2026

New or Modified Term(s) Used in NERC Reliability Standards

This section includes all new or modified terms used in the proposed standard that will be included in the *Glossary of Terms Used in NERC Reliability Standards* upon applicable regulatory approval. Terms used in the proposed standard that are already defined and are not being modified can be found in the *Glossary of Terms Used in NERC Reliability Standards*. The new or revised terms listed below will be presented for approval along with the proposed standard. Upon Board adoption, this section will be removed.

Term(s):

None.

A. Introduction

1. **Title:** Physical Security

2. **Number:** CIP-~~014-3~~014-4

3. **Purpose:** To identify and protect Transmission stations and Transmission substations, and their associated primary control centers, that if rendered inoperable or damaged ~~as a result of~~due to a physical attack, could result in instability, uncontrolled separation, or Cascading within an Interconnection.

4. **Applicability:**

   4.1. Functional Entities:

   4.1.1. ~~**4.1.1**~~ Transmission Owner that owns ~~**a**~~or jointly owns one or more Transmission ~~**station**~~stations or Transmission ~~**substation that meets any of the following**~~substations that meet the applicability criteria~~:~~ of Attachment 1.

   ~~**4.1.1.1** Transmission Facilities operated at 500 kV or higher. For the purpose of this criterion, the collector bus for a generation plant is not considered a Transmission Facility, but is part of the generation interconnection Facility.~~

   ~~**4.1.1.2** Transmission Facilities that are operating between 200 kV and 499 kV at a single station or substation, where the station or substation is connected at 200 kV or higher voltages to three or more other Transmission stations or substations and has an "aggregate weighted value" exceeding 3000 according to the table below. The "aggregate weighted value" for a single station or substation is determined by summing the "weight value per line" shown in the table below for each incoming and each outgoing BES Transmission Line that is connected to another Transmission station or substation. For the purpose of this criterion, the collector bus for a generation plant is not considered a Transmission Facility, but is part of the generation interconnection Facility.~~

~~**Voltage Value of a Line**~~	~~**Weight Value per Line**~~
~~less than 200 kV (not applicable)~~	~~(not applicable)~~
~~200 kV to 299 kV~~	~~700~~
~~300 kV to 499 kV~~	~~1300~~
~~500 kV and above~~	~~0~~

   ~~**4.1.1.3** Transmission Facilities at a single station or substation location that are identified by its Reliability Coordinator, Planning Coordinator, or Transmission Planner as critical to the derivation of Interconnection~~

~~Reliability Operating Limits (IROLs) and their associated contingencies.~~

~~**4.1.1.4** Transmission Facilities identified as essential to meeting Nuclear Plant Interface Requirements.~~

4.1.2. ~~**4.1.2**~~ Transmission Operator~~.~~

Exemption: Facilities in a "protected area," as defined in 10 C.F.R. § 73.2, within the scope of a security plan approved or accepted by the Nuclear Regulatory Commission ~~(NRC)~~ are not subject to this Standard; or~~,~~ Facilities within the scope of a security plan approved or accepted by the Canadian Nuclear Safety Commission are not subject to this Reliability Standard.

5. ~~5.~~ Effective ~~Dates~~Date:

See Implementation Plan for CIP-~~014-2~~014-4.

~~6. Background:~~

~~This Reliability Standard addresses the directives from the FERC order issued March 7, 2014, *Reliability Standards for Physical Security Measures*, 146 FERC ¶ 61,166 (2014), which required NERC to develop a physical security reliability standard(s) to identify and protect facilities that if rendered inoperable or damaged could result in instability, uncontrolled separation, or Cascading within an Interconnection~~

B. Requirements and Measures

R1. Each Transmission Owner shall, at least once every 36 calendar months, identify each applicable Transmission station and Transmission substation meeting any of the criteria in Attachment 1 that is either existing or planned to be in service within 36 calendar months. *[Violation Risk Factor: High; Time-Horizon: Long-term Planning]*

M1. Examples of evidence may include, but are not limited to, dated written or electronic documentation of the Transmission station(s) and Transmission substation(s) (existing and those planned to be in service within 36 calendar months) that meet any of the criteria in Attachment 1.

R2. Each Transmission Owner with applicable Transmission station(s) or Transmission substation(s) identified in Requirement R1 shall identify proximate existing Bulk Electric System Transmission station(s) and Bulk Electric System Transmission substation(s), irrespective of ownership, within 1500 feet or 457 meters (the shortest distance, measured substation fence line to substation fence line) of an applicable Transmission station or Transmission substation identified in Requirement R1. *[Violation Risk Factor: Medium; Time-Horizon: Long-term Planning]*

M2. Examples of evidence may include, but are not limited to, dated written or electronic documentation of the Bulk Electric System Transmission stations or Bulk Electric System Transmission substations identified in Requirement R2.

R3. Each Transmission Owner shall have a documented risk assessment methodology for evaluating the loss of each applicable Transmission station or Transmission substation identified in Requirement R1. The methodology shall include, at a minimum, the following: *[Violation Risk Factor: High; Time-Horizon: Long-term Planning]*

3.1. Documented criteria for assessing instability, uncontrolled separation, or Cascading within an Interconnection. The criteria shall include, at a minimum, technically justified thresholds identifying unacceptable generation and load loss within an Interconnection.

3.2. A provision that steady-state and dynamic simulations shall each be performed using at a minimum one System peak Load case and one System Off-Peak Load case.

3.3. Specifications for simulations at each applicable Transmission station or Transmission substation identified in accordance with Requirement R1 and, if applicable, at each associated proximate existing Bulk Electric System Transmission station(s) and Bulk Electric System Transmission substation(s) identified in accordance with Requirement R2, that include:

3.3.1. At the applicable Transmission station or Transmission substation:

3.3.1.1. Prior loss of communication and Protection Systems;

3.3.1.2. Application of a Fault or Faults; and

3.3.1.3. Delayed (remote) clearing times shall be used unless otherwise technically substantiated.

3.3.2. At each proximate existing Bulk Electric System Transmission station(s) and Bulk Electric System Transmission substation(s), as applicable:

3.3.2.1. Application of a Fault or Faults, either simultaneous with or following the Fault or Faults applied under Part 3.3.1.2; and

3.3.2.2. Normal clearing times shall be used unless otherwise technically substantiated.

3.3.3. A documented justification for the Fault(s) associated with physical attack to be simulated. A single justification may be used for multiple locations. The justification shall include at a minimum:

3.3.3.1. The type of credible high-severity physical attack considered; and

3.3.3.2. The type of Fault(s) selected based upon the attack considered.

3.3.4. Removal of all Elements that Protection Systems and other controls are expected to automatically disconnect.

3.3.5. Actual or more conservative clearing times shall be used.

M3. Each Transmission Owner shall provide dated evidence, such as electronic or hard copies, of a risk assessment methodology satisfying Requirement R3.

R4. Each Transmission Owner with applicable Transmission station(s) and Transmission substation(s) identified in Requirement R1 jointly owned by multiple Transmission Owners shall coordinate with each appropriate Transmission Owner(s) to determine and document their individual and joint responsibilities under Requirement R3 and Requirement R5. *[Violation Risk Factor: Medium; Time-Horizon: Operations Planning, Long-term Planning]*

M4. Examples of acceptable evidence may include, but are not limited to, dated documentation, such as meeting minutes, agreements, and email correspondence, that identifies that agreement has been reached on individual and joint responsibilities for performing the required risk assessments.

R5. At least once every 36 calendar months, each Transmission Owner shall perform a risk assessment to identify applicable Transmission station(s) and Transmission substation(s) identified in Requirement R1, that if rendered inoperable or damaged could result in instability, uncontrolled separation, or Cascading within an Interconnection, using the methodology established in Requirement R3. Jointly

owned Transmission station(s) and Transmission substation(s) shall be assessed according to the responsibilities documented under Requirement R4. If proximate Bulk Electric System Transmission station(s) and Bulk Electric System Transmission substation(s) were identified in Requirement R2, they shall be included in the risk assessment according to Requirement R3, Part 3.3. *[Violation Risk Factor: High; Time-Horizon: Operations Planning, Long-term Planning]*

5.1. If during a risk assessment, a Transmission station or Transmission substation is identified in either the dynamic or steady-state simulation as causing instability, uncontrolled separation, or Cascading within an Interconnection when rendered inoperable or damaged, then no further simulation is required.

5.2. If a previous risk assessment has identified a Transmission station or Transmission substation as causing instability, uncontrolled separation, or Cascading within an Interconnection when rendered inoperable or damaged, then the Transmission Owner may forgo additional assessments on that Transmission station or Transmission substation. Requirement R5, Part 5.3 and Requirement R7 through Requirement R10 still apply to that Transmission station or Transmission substation until a new risk assessment demonstrates otherwise.

5.3. The Transmission Owner shall identify the primary control center that operationally controls each Transmission station or Transmission substation identified as causing instability, uncontrolled separation, or Cascading within an Interconnection when rendered inoperable or damaged in the Requirement R5 risk assessment.

M5. Examples of acceptable evidence may include, but are not limited to, dated written or electronic documentation of the risk assessment satisfying Requirement R5 including the identified Transmission station(s) or Transmission substation(s). For Requirement R5, Part 5.3, examples of acceptable evidence may include, but are not limited to, dated written or electronic documentation of the identification of the primary control center that operationally controls each identified Transmission station or Transmission substation.

R6. ~~**R2.**~~ Each Transmission Owner shall have an unaffiliated third party verify the risk assessment performed under Requirement ~~R1~~R5. The verification may occur ~~concurrent~~concurrently with or after the risk assessment performed under Requirement ~~R1. *[VRF*~~R5. *[Violation Risk Factor: Medium; Time-Horizon: Long-term Planning]*

6.1. ~~**2.1.**~~ Each Transmission Owner shall select an unaffiliated verifying entity that is either:

- A registered Planning Coordinator, Transmission Planner, or Reliability Coordinator; or
- An entity that has transmission planning or analysis experience.

6.2. ~~**2.2.**~~ The unaffiliated ~~third party~~third-party verification shall verify the Transmission Owner's risk assessment performed under Requirement ~~R1~~R5, which may include recommendations for the addition or deletion of a Transmission station(s) or Transmission substation(s). The Transmission Owner shall ensure the verification is completed within 90 calendar days following the completion of the Requirement ~~R1~~R5 risk assessment.

6.3. ~~**2.3.**~~ If the unaffiliated verifying entity recommends that the Transmission Owner add a Transmission station(s) or Transmission substation(s) to, or remove a Transmission station~~(s)~~ or Transmission substation~~(s)~~ from, its identification under Requirement ~~R1~~R5, the Transmission Owner shall either, within 60 calendar days of completion of the verification, for each recommended addition or removal of a Transmission station or Transmission substation:

- Modify its identification under Requirement ~~R1~~R5 consistent with the recommendation; or
- Document the technical basis for not modifying the identification in accordance with the recommendation.

6.4. ~~**2.4.**~~ Each Transmission Owner shall implement procedures, such as the use of non-disclosure agreements, for protecting sensitive or confidential information made available to the unaffiliated ~~third party~~third-party verifier and to protect or exempt sensitive or confidential information developed pursuant to this Reliability Standard from public disclosure.

M6. ~~**M2.**~~ Examples of acceptable evidence may include, but are not limited to, dated written or electronic documentation that the Transmission Owner completed an unaffiliated third party verification of the Requirement ~~R1~~R5 risk assessment and satisfied all of the applicable provisions of Requirement ~~R2~~R6, including, if applicable, documenting the technical basis for not modifying the ~~Requirement R1~~ identification in Requirements R1, R2, R3, R4, and R5 as specified under Part ~~2.3~~6.3. Additionally, examples of evidence may include, but are not limited to, written or electronic documentation of procedures to protect information under Part ~~2.4~~6.4.

R7. ~~**R3.**~~ For a primary control center(s) identified by the Transmission Owner according to Requirement ~~R1~~R5, Part ~~1.2~~5.3 that a) operationally controls an identified Transmission station or Transmission substation verified according to Requirement ~~R2~~R6, and b) is not under the operational control of the Transmission Owner: the Transmission Owner shall, within seven calendar days following completion of Requirement ~~R2~~R6, notify the Transmission Operator that has operational control of the primary control center of such identification and the date of completion of Requirement ~~R2. *[VRF*~~R6. *[Violation Risk Factor: Lower; Time-Horizon: Long-term Planning]*

7.1. ~~**3.1.**~~ If a Transmission station or Transmission substation previously identified under ~~Requirement~~Requirements R1 and R5 and verified according to Requirement ~~R2~~R6 is removed from the identification during a subsequent risk

assessment performed according to Requirement ~~R1~~R5 or a verification according to Requirement ~~R2~~R6, then the Transmission Owner shall, within seven calendar days following the verification or the subsequent risk assessment, notify the Transmission Operator that has operational control of the primary control center of the removal.

M7. ~~**M3.**~~ Examples of acceptable evidence may include, but are not limited to, ~~dated~~ written or electronic notifications or communications that the Transmission Owner notified each Transmission Operator, as applicable, according to Requirement ~~R3~~R7.

R8. ~~**R4.**~~ Each Transmission Owner that identified a Transmission station, Transmission substation, or a primary control center in Requirement ~~R1~~R5 and verified according to Requirement ~~R2~~R6, and each Transmission Operator notified by a Transmission Owner according to Requirement ~~R3~~R7, shall conduct an evaluation of the potential threats and vulnerabilities of a physical attack to each of their respective Transmission station(s), Transmission substation(s), and primary control center(s) identified in Requirement ~~R1~~R5 and verified according to Requirement ~~R2~~R6. The evaluation shall consider the following: *[~~VRF~~Violation Risk Factor: Medium; Time-Horizon: Operations Planning, Long-term Planning]*

8.1. ~~**4.1.**~~ Unique characteristics of the identified and verified Transmission station(s), Transmission substation(s), and primary control center(s);

8.2. ~~**4.2.**~~ Prior history of attack(s) on similar facilities taking into account the frequency, geographic proximity, and severity of past physical security related events; and

8.3. ~~**4.3.**~~ Intelligence or threat warnings received from sources such as law enforcement, the Electric Reliability Organization (ERO), the Electricity Sector Information Sharing and Analysis Center (~~ES-ISAC~~E-ISAC), U.S. federal and/or Canadian governmental agencies, or their successors.

~~**M4**~~**M8.** Examples of evidence may include, but are not limited to, dated written or electronic documentation that the Transmission Owner or Transmission Operator conducted an evaluation of the potential threats and vulnerabilities of a physical attack to their respective Transmission station(s), Transmission substation(s), and primary control center(s) as specified in Requirement ~~R4~~R8.

R9. ~~**R5.**~~ Each Transmission Owner that identified a Transmission station, Transmission substation, or primary control center in Requirement ~~R1~~R5 and verified according to Requirement ~~R2~~R6, and each Transmission Operator notified by a Transmission Owner according to Requirement ~~R3~~R7, shall develop and implement a documented physical security plan(s) that covers their respective Transmission station(s), Transmission substation(s), and primary control center(s). The physical security plan(s) shall be developed within 120 calendar days following the completion of Requirement ~~R2~~R6 and executed according to the timeline specified in the physical

security plan(s). The physical security plan(s) shall include the following attributes: [~~*VRF*~~*Violation Risk Factor*: *High; Time-Horizon: Long-term Planning*]

9.1. ~~**5.1.**~~ Resiliency or security measures designed collectively to deter, detect, delay, assess, communicate, and respond to potential physical threats and vulnerabilities identified during the evaluation conducted in Requirement ~~R4~~R8.

9.2. ~~**5.2.**~~ Law enforcement contact and coordination information.

9.3. ~~**5.3.**~~ A timeline for executing the physical security enhancements and modifications specified in the physical security plan.

9.4. ~~**5.4.**~~ Provisions to evaluate evolving physical threats, and their corresponding security measures, to the Transmission station(s), Transmission substation(s), or primary control center(s).

~~M5~~M9. Examples of evidence may include, but are not limited to, dated written or electronic documentation of its physical security plan(s) that covers their respective identified and verified Transmission station(s), Transmission substation(s), and primary control center(s) as specified in Requirement ~~R5~~R6, and additional evidence demonstrating execution of the physical security plan according to the timeline specified in the physical security plan.

R10. ~~**R6.**~~ Each Transmission Owner that identified a Transmission station, Transmission substation, or primary control center in Requirement ~~R1~~R5 and verified according to Requirement ~~R2~~R6, and each Transmission Operator notified by a Transmission Owner according to Requirement ~~R3~~R7, shall have an unaffiliated third party review the evaluation performed under Requirement ~~R4~~R8 and the security plan(s) developed under Requirement ~~R5~~R9. The review may occur concurrently with or after completion of the evaluation performed under Requirement ~~R4~~R8 and the security plan development under Requirement ~~R5. [*VRF*~~R9. *[Violation Risk Factor: Medium; Time-Horizon: Long-term Planning]*

10.1. ~~**6.1.**~~ Each Transmission Owner and Transmission Operator shall select an unaffiliated ~~third-party~~third-party reviewer from the following:

- An entity or organization with electric industry physical security experience and whose review staff has at least one member who holds either a Certified Protection Professional (CPP) or Physical Security Professional (PSP) certification~~.~~;
- An entity or organization approved by the ERO~~.~~;
- A governmental agency with physical security expertise~~.~~; or
- An entity or organization with demonstrated law enforcement, government, or military physical security expertise.

10.2. ~~**6.2.**~~ The Transmission Owner or Transmission Operator, respectively, shall ensure that the unaffiliated ~~third-party~~third-party review is completed within 90

calendar days of completing the security plan(s) developed in Requirement ~~R5~~R9. The unaffiliated ~~third party~~third-party review may, but is not required to, include recommended changes to the evaluation performed under Requirement ~~R4~~R8 or the security plan(s) developed under Requirement ~~R5~~R9.

10.3.~~6.3.~~ If the unaffiliated ~~third party~~third-party reviewer recommends changes to the evaluation performed under Requirement ~~R4~~R8 or security plan(s) developed under Requirement ~~R5~~R9, the Transmission Owner or Transmission Operator shall, within 60 calendar days of the completion of the unaffiliated third party review, for each recommendation:

- Modify its evaluation or security plan(s) consistent with the recommendation; or
- Document the reason(s) for not modifying the evaluation or security plan(s) consistent with the recommendation.

10.4.~~6.4.~~ Each Transmission Owner and Transmission Operator shall implement procedures, such as the use of non-disclosure agreements, for protecting sensitive or confidential information made available to the unaffiliated ~~third party~~third-party reviewer and to protect or exempt sensitive or confidential information developed pursuant to this Reliability Standard from public disclosure.

~~M6~~M10. Examples of evidence may include, but are not limited to, written or electronic documentation that the Transmission Owner or Transmission Operator had an unaffiliated third party review the evaluation performed under Requirement ~~R4~~R8 and the security plan(s) developed under Requirement ~~R5~~R9 as specified in Requirement ~~R6~~R10 including, if applicable, documenting the reasons for not modifying the evaluation or security plan(s) in accordance with a recommendation under Part ~~6.3~~10.3. Additionally, examples of evidence may include, but are not limited to, written or electronic documentation of procedures to protect information under Part ~~6.4~~10.4.

C. Compliance

1. Compliance Monitoring Process

1.1. Compliance Enforcement Authority

: ~~As defined in the NERC Rules of Procedure,~~ "Compliance Enforcement Authority" ~~(CEA)~~ means NERC or the Regional Entity in their respective roles of monitoring and enforcing compliance with the NERC Reliability Standards.

~~**1.2. Evidence Retention**~~

1.2. Evidence Retention: The following evidence retention ~~periods~~period(s) identify the period of time an entity is required to retain specific evidence to demonstrate compliance. For instances where the evidence retention period specified below is shorter than the time since the last audit, the Compliance Enforcement Authority ~~CEA~~ may ask an entity to provide other evidence ~~during an on-site visit~~ to show that it was compliant for the ~~full-time~~full-time period since the last audit.

The Transmission Owner and Transmission Operator shall keep data or evidence to show compliance, as identified below, unless directed by its Compliance Enforcement Authority ~~(CEA)~~ to retain specific evidence for a longer period of time as part of an investigation~~.~~:

The responsible entities shall retain ~~documentation as~~ evidence, as per Requirements R1 through R10, for three years.

If a Responsible Entity is found non-compliant, it shall keep information related to the non-compliance until mitigation is complete and approved, or for the time specified above, whichever is longer.

The CEA shall keep the last audit records and all requested and submitted subsequent audit records~~, subject to the confidentiality provisions of Section 1500 of the Rules of Procedure and the provisions of Section 1.4 below~~.

~~**1.3. Compliance Monitoring and Assessment Processes:**~~

~~Compliance Audits~~

~~Self-Certifications~~
~~Spot Checking~~

1.3. Compliance Monitoring and Enforcement Program: "Compliance Monitoring Enforcement Program" or "CMEP" means, depending on the context (1) the NERC Compliance Monitoring and Enforcement Program (Appendix 4C to the NERC Rules of Procedure) or the Commission-approved program of a Regional Entity, as applicable, or (2) the program, department or organization within

NERC or a Regional Entity that is responsible for performing compliance monitoring and enforcement activities with respect to Registered Entities' compliance with Reliability Standards.

Compliance Violation Investigations Severity Levels

Self-Reporting

Complaints Text

2. Table of Compliance Elements

R #	Time Horizon	VRF	Violation Severity Levels (CIP-014-3)		
		Lower VSL	Moderate VSL	High VSL	Severe VSL
R1	Long-term Planning	The Transmission Owner performed an initial risk assessment but did so after the date specified in the implementation plan for performing the initial risk assessment but less than or equal to two calendar months after that date; OR The Transmission Owner that has identified in its previous risk assessment one or more Transmission stations or Transmission substations that if rendered inoperable or damaged could result in instability, uncontrolled separation, or Cascading within an Interconnection	The Transmission Owner performed an initial risk assessment but did so more than two calendar months after the date specified in the implementation plan for performing the initial risk assessment but less than or equal to four calendar months after that date; OR The Transmission Owner that has identified in its previous risk assessment one or more Transmission stations or Transmission substations that if rendered inoperable or damaged could result in instability, uncontrolled separation, or Cascading within an Interconnection performed a subsequent	The Transmission Owner performed an initial risk assessment but did so more than four calendar months after the date specified in the implementation plan for performing the initial risk assessment but less than or equal to six calendar months after that date; OR The Transmission Owner that has identified in its previous risk assessment one or more Transmission stations or Transmission substations that if rendered inoperable or damaged could result in instability, uncontrolled separation, or Cascading within an Interconnection performed a subsequent	The Transmission Owner performed an initial risk assessment but did so more than six calendar months after the date specified in the implementation plan for performing the initial risk assessment; OR The Transmission Owner failed to perform an initial risk assessment; OR The Transmission Owner that has identified in its previous risk assessment one or more Transmissionstations or Transmission substations that if rendered inoperable or damaged could result in instability, uncontrolled separation,

R #	Time Horizon	VRF Violation Severity Levels (CIP-014-3)			
		Lower VSL	Moderate VSL	High VSL	Severe VSL
		performed a subsequent risk assessment but did so after 30 calendar months but less than or equal to 32 calendar months; OR The Transmission Owner that has not identified in its previous risk assessment any Transmission stations or Transmission substations that if rendered inoperable or damaged could result in instability, uncontrolled separation, or Cascading within an Interconnection performed a subsequent risk assessment but did so after 60 calendar months but less than or	risk assessment but did so after 32 calendar months but less than or equal to 34 calendar months; OR The Transmission Owner that has not identified in its previous risk assessment any Transmission stations or Transmission substations that if rendered inoperable or damaged could result in instability, uncontrolled separation, or Cascading within an Interconnection performed a subsequent risk assessment but did so after 62 calendar months but less than or equal to 64 calendar months.	risk assessment but did so after 34 calendar months but less than or equal to 36 calendar months; OR The Transmission Owner that has not identified in its previous risk assessment any Transmission stations or Transmission substations that if rendered inoperable or damaged could result in instability, uncontrolled separation, or Cascading within an Interconnection performed a subsequent risk assessment but did so after 64 calendar months but less than or equal to 66 calendar months; OR	or Cascading within an Interconnection performed a subsequent risk assessment but did so after more than 36 calendar months; OR The Transmission Owner that has identified in its previous risk assessment one or more Transmission stations or Transmission substations that if rendered inoperable or damaged could result in instability, uncontrolledseparation, or Cascading within an Interconnection failed to perform a risk assessment; OR The Transmission Owner that has not identified in its previous risk assessment any

R #	Time Horizon	VRF	Violation Severity Levels (CIP-014-3)		
		Lower VSL	Moderate VSL	High VSL	Severe VSL
		equal to 62 calendar months.		The Transmission Owner performed a risk assessment but failed to include Part 1.2.	Transmission stations or Transmission substations that if rendered inoperable or damaged could result in instability, uncontrolled separation, or Cascading within an Interconnection performed a subsequent risk assessment but did so after more than 66 calendar months; OR The Transmission Owner that has not identified in its previous risk assessment any Transmission station and Transmission substations that if rendered inoperable or damaged could result in instability, uncontrolled separation, or Cascading within an Interconnection failed to perform a subsequent risk assessment.

	Violation Severity Levels			
	Lower VSL	**Moderate VSL**	**High VSL**	**Severe VSL**
R1.	The Transmission Owner identified each applicable Transmission station(s) and Transmission substation(s) per Attachment 1, but did so after 36 calendar months, but less than or equal to 38 calendar months. OR The Transmission Owner identified each applicable Transmission station(s) and Transmission substation(s), but failed to identify less than or equal to 10% of the applicable Transmission station(s) and Transmission substation(s) per Attachment 1.	The Transmission Owner identified each applicable Transmission station(s) and Transmission substation(s) per Attachment 1, but did so after 38 calendar months, but less than or equal to 40 calendar months. OR The Transmission Owner identified each applicable Transmission station(s) and Transmission substation(s), but failed to identify more than 10% and less than or equal to 20% of the applicable Transmission station(s) and Transmission substation(s) per Attachment 1.	The Transmission Owner identified each applicable Transmission station(s) and Transmission substation(s) per Attachment 1, but did so after 40 calendar months, but less than or equal to 42 calendar months. OR The Transmission Owner identified each applicable Transmission station(s) and Transmission substation(s), but failed to identify more than 20% and less than or equal to 30% of the applicable Transmission station(s) and Transmission substation(s) per Attachment 1.	The Transmission Owner failed to identify each applicable Transmission station(s) and Transmission substation(s) per Attachment 1. OR The Transmission Owner identified each applicable Transmission station(s) and Transmission substation(s) per Attachment 1, but did so after more than 42 calendar months. OR The Transmission Owner identified each applicable Transmission station(s) and Transmission substation(s), but failed to identify more than 30% of the applicable Transmission station(s) and Transmission substation(s) per Attachment 1.
R2.	N/A	N/A	N/A	The Transmission Owner with applicable Transmission

				station(s) or Transmission substation(s) identified in Requirement R1 did not identify existing Bulk Electric System Transmission station(s) and Bulk Electric System Transmission substation(s), irrespective of ownership, within 1500 feet or 457 meters (the shortest distance, measured substation fence line to substation fence line) of an applicable Transmission station or Transmission substation identified in Requirement R1.
R3.	N/A	The Transmission Owner has a risk assessment methodology that failed to include one of the requirements listed in Parts 3.1 through 3.3.	The Transmission Owner has a risk assessment methodology that failed to include two of the requirements listed in Parts 3.1 through 3.3.	The Transmission Owner has a risk assessment methodology that failed to include all three of the requirements listed in Parts 3.1 through 3.3. OR The Transmission Owner does not have a risk assessment methodology.
R4.	The Transmission Owner with applicable Transmission station(s) and Transmission substation(s) identified in Requirement R1 owned by multiple Transmission Owners failed to coordinate with each appropriate Transmission Owner(s) to determine and document their individual and joint responsibilities for	The Transmission Owner with applicable Transmission station(s) and Transmission substation(s) identified in Requirement R1 owned by multiple Transmission Owners failed to coordinate with each appropriate Transmission Owner(s) to determine and document their individual and joint responsibilities for	The Transmission Owner with applicable Transmission station(s) and Transmission substation(s) identified in Requirement owned by multiple Transmission Owners failed to coordinate with each appropriate Transmission Owner(s) to determine and document their individual and joint responsibilities for	The Transmission Owner with applicable Transmission station(s) and Transmission substation(s) identified in Requirement R1 owned by multiple Transmission Owners failed to coordinate with each appropriate Transmission Owner(s) to determine and document their individual and joint responsibilities for

	documenting a risk assessment methodology under Requirement R3 and for performing any required risk assessments per Requirement R5 for less than or equal to 25% of jointly owned applicable Transmission station(s) and Transmission substation(s).	documenting a risk assessment methodology under Requirement R3 and for performing any required risk assessments per Requirement R5 for more than 25% and less than or equal to 50% of jointly owned applicable Transmission station(s) and Transmission substation(s).	documenting a risk assessment methodology under Requirement R3 and for performing any required risk assessments per Requirement R5 for more than 50% and less than or equal to 75% of jointly owned applicable Transmission station(s) and Transmission substation(s).	documenting a risk assessment methodology under Requirement R3 and for performing any required risk assessments per Requirement R5 for more than 75% and less than or equal to 100% of any evidence for jointly owned applicable Transmission station(s) and Transmission substation(s).
R5.	The Transmission Owner performed a risk assessment, but did so after 36 calendar months, but less than or equal to 38 calendar months.	The Transmission Owner performed a risk assessment, but did so after 38 calendar months, but less than or equal to 40 calendar months. OR The Transmission Owner performed a risk assessment inconsistent with one of the methodology requirements listed in Requirement R3, Parts 3.1 through 3.3.	The Transmission Owner performed a risk assessment, but did so after 40 calendar months, but less than or equal to 42 calendar months. OR The Transmission Owner performed a risk assessment inconsistent with two of the methodology requirements listed in Requirement R3, Parts 3.1 through 3.3. OR The Transmission Owner performed a risk assessment, but failed to include the primary control center identified in Part 5.2.	The Transmission Owner performed a risk assessment, but did so after more than 42 calendar months. OR The Transmission Owner performed a risk assessment inconsistent with all three of the methodology requirements listed in Requirement R3, Parts 3.1 through 3.3.
~~R2 Long-term Planning~~	The Transmission Owner had an unaffiliated third party verify the risk assessment performed under	The Transmission Owner had an unaffiliated third party verify the risk assessment performed under	The Transmission Owner had an unaffiliated third party verify the risk assessment performed under	The Transmission Owner had an unaffiliated third party verify the risk assessment performed under

~~Medium~~R6.	Requirement ~~R1~~R5, but did so in more than 90 calendar days, but less than or equal to 100 calendar days following completion of Requirement ~~R1;~~R5. OR The Transmission Owner had an unaffiliated third party verify the risk assessment performed under Requirement ~~R1~~R5 and modified or documented the technical basis for not modifying its identification under Requirement ~~R1~~R5 as required by ~~Part 2.3~~Part6.3, but did so more than 60 calendar days and less than or equal to 70 calendar days from completion of the third party verification.	Requirement ~~R1~~R5, but did so more than 100 calendar days, but less than or equal to 110 calendar days following completion of Requirement ~~R1;~~R5. ~~Or~~OR The Transmission Owner had an unaffiliated third party verify the risk assessment performed under Requirement ~~R1~~R5 and modified or documented the technical basis for not modifying its identification under Requirement ~~R1~~R5 as required by Part ~~2.3~~6.3, but did so more than 70 calendar days and less than or equal to 80 calendar days from completion of the third party verification.	Requirement ~~R1~~R5, but did so more than 110 calendar days, but less than or equal to 120 calendar days following completion of Requirement ~~R1;~~R5. OR The Transmission Owner had an unaffiliated third party verify the risk assessment performed under Requirement ~~R1~~R5 and modified or documented the technical basis for not modifying its identification under Requirement ~~R1~~R5 as required by Part ~~2.3~~6.3, but did so more than 80 calendar days from completion of the third party verification~~;~~. OR The Transmission Owner had an unaffiliated third party verify the risk assessment performed under Requirement ~~R1~~R5, but failed to modify or document the technical basis for not modifying its identification under ~~R1~~R4 as required by Part ~~2.3~~6.3.	Requirement ~~R1~~R5, but did so more than 120 calendar days following completion of Requirement ~~R1;~~R5. OR The Transmission Owner failed to have an unaffiliated third party verify the risk assessment performed under Requirement ~~R1;~~R5. OR The Transmission Owner had an unaffiliated third party verify the risk assessment performed under Requirement ~~R1~~R5, but failed to implement procedures for protecting information per Part ~~2.4~~6.4.

~~R3~~ ~~Long-term Planning~~ ~~Lower~~R7.	The Transmission Owner notified the Transmission Operator that operates the primary control center as specified in Requirement ~~R3~~R7, but did so more than seven calendar days and less than or equal to nine calendar days following the completion of Requirement ~~R2;~~R6. OR The Transmission Owner notified the Transmission Operator that operates the primary control center of the removal from the identification in Requirement ~~R1~~R5, but did so more than seven calendar days and less than or equal to nine calendar days following the verification or the subsequent risk assessment.	The Transmission Owner notified the Transmission Operator that operates the primary control center as specified in Requirement ~~R3~~R7, but did so more than nine calendar days and less than or equal to 11 calendar days following the completion of Requirement ~~R2;~~R6. OR The Transmission Owner notified the Transmission Operator that operates the primary control center of the removal from the identification in Requirement ~~R1~~R5, but did so more than nine calendar days and less than or equal to 11 calendar days following the verification or the subsequent risk assessment.	The Transmission Owner notified the Transmission Operator that operates the primary control center as specified in Requirement ~~R3~~R7, but did so more than 11 calendar days and less than or equal to 13 calendar days following the completion of Requirement ~~R2;~~R6. OR The Transmission Owner notified the Transmission Operator that operates the primary control center of the removal from the identification in Requirement ~~R1~~R5, but did so more than 11 calendar days and less than or equal to 13 calendar days following the verification or the subsequent risk assessment.	The Transmission Owner notified the Transmission Operator that operates the primary control center as specified in Requirement ~~R3~~R7, but did so more than 13 calendar days following the completion of Requirement ~~R2;~~R6. OR The Transmission Owner failed to notify the Transmission Operator that it operates a control center identified in Requirement ~~R1;~~R5. OR The Transmission Owner notified the Transmission Operator that operates the primary control center of the removal from the identification in Requirement ~~R1~~R5, but did so more than 13 calendar days following the verification or the subsequent risk assessment. OR The Transmission Owner failed to notify the Transmission Operator that operates the primary control center of the removal from

				the identification in Requirement ~~R1~~R5.

		Violation Severity Levels			
		Lower VSL	**Moderate VSL**	**High VSL**	**Severe VSL**
~~R4~~R8.	**~~Operations Planning, Long-term Planning~~**	~~Medium~~ N/A	The ~~Responsible Entity~~responsible entity conducted an evaluation of the potential physical threats and vulnerabilities to each of its Transmission station(s), Transmission substation(s), and primary control center(s) identified in Requirement ~~R1~~R5, but failed to consider one of Parts ~~4.1~~8.1 through ~~4.3~~8.3 in the evaluation.	The ~~Responsible Entity~~responsible entity conducted an evaluation of the potential physical threats and vulnerabilities to each of its Transmission station(s), Transmission substation(s), and primary control center(s) identified in Requirement ~~R1~~R5, but failed to consider two of Parts ~~4.1~~8.1 through ~~4.3~~8.3 in the evaluation.	The ~~Responsible Entity~~responsible entity failed to conduct an evaluation of the potential physical threats and vulnerabilities to each of its Transmission station(s), Transmission substation(s), and primary control center(s) identified in Requirement ~~R1;~~R5. OR The ~~Responsible Entity~~responsible entity conducted an evaluation of the potential physical threats and vulnerabilities to each of its Transmission station(s), Transmission substation(s), and primary control center(s) identified in Requirement ~~R1~~R5, but failed to consider Parts ~~4.1~~8.1 through ~~4.3~~8.3.

		Violation Severity Levels			
		Lower VSL	**Moderate VSL**	**High VSL**	**Severe VSL**
~~R5~~R9.	~~Long-term Planning~~	~~High~~ The ~~Responsible Entity~~responsible entity developed and implemented a documented physical security plan(s) that covers each of its Transmission station(s), Transmission substation(s), and primary control center(s) identified in Requirement ~~R1~~R5, but did so more than 120 calendar days, but less than or equal to 130 calendar days after completing Requirement ~~R2;~~R6. OR The ~~Responsible Entity~~responsible entity developed and implemented a documented physical security plan(s) that covers its Transmission station(s), Transmission substation(s), and primary control center(s) identified in Requirement ~~R1~~R5 and verified according to	The ~~Responsible Entity~~responsible entity developed and implemented a documented physical security plan(s) that covers each of its Transmission station(s), Transmission substation(s), and primary control center(s) identified in Requirement ~~R1~~R5, but did so more than 130 calendar days, but less than or equal to 140 calendar days after completing Requirement ~~R2;~~R6. OR The ~~Responsible Entity~~responsible entity developed and implemented a documented physical security plan(s) that covers its Transmission station(s), Transmission substation(s), and primary control center(s) identified in Requirement ~~R1~~R5 and verified according to Requirement ~~R2~~R6, but failed to include two of	The ~~Responsible Entity~~responsible entity developed and implemented a documented physical security plan(s) that covers each of its Transmission station(s), Transmission substation(s), and primary control center(s) identified in Requirement ~~R1~~R5, but did so more than 140 calendar days, but less than or equal to 150 calendar days after completing Requirement ~~R2;~~R6. OR The ~~Responsible Entity~~responsible entity developed and implemented a documented physical security plan(s) that covers its Transmission station(s), Transmission substation(s), and primary control center(s) identified in Requirement ~~R1~~R5 and verified according to Requirement ~~R2~~R6, but failed to include three of	The ~~Responsible Entity~~responsible entity developed and implemented a documented physical security plan(s) that covers each of its Transmission station(s), Transmission substation(s), and primary control center(s) identified in Requirement ~~R1~~R5, but did so more than 150 calendar days after completing the verification in Requirement ~~R2;~~R6. OR The ~~Responsible Entity~~responsible entity failed to develop and implement a documented physical security plan(s) that covers its Transmission station(s), Transmission substation(s), and primary control center(s) identified in Requirement ~~R1~~R5 and verified according to Requirement ~~R2~~R6. OR

		Violation Severity Levels			
		Lower VSL	Moderate VSL	High VSL	Severe VSL
		Requirement R2R6, but failed to include one of Parts 5.19.1 through 5.49.4 in the plan.	Parts 5.19.1 through 5.49.4 in the plan.	Parts 5.19.1 through 5.49.4 in the plan.	The Responsible Entityresponsible entity developed and implemented a documented physical security plan(s) that covers its Transmission station(s), Transmission substation(s), and primary control center(s) identified in Requirement R1R5 and verified according to Requirement 2R6, but failed to include Parts 5.19.1 through 5.49.4 in the plan.
R6R 10.	Long-term Planning	Medium The Responsible Entityresponsible entity had an unaffiliated third party review the evaluation performed under Requirement R4R8 and the security plan(s) developed under Requirement R5R9, but did so in more than 90 calendar days, but less than or equal to 100 calendar days;. OR	The Responsible Entityresponsible entity had an unaffiliated third party review the evaluation performed under Requirement R4R8 and the security plan(s) developed under Requirement R5R9, but did so in more than 100 calendar days, but less than or equal to 110 calendar days;. OR The Responsible Entityresponsible entity	The Responsible Entityresponsible entity had an unaffiliated third party review the evaluation performed under Requirement R4R8 and the security plan(s) developed under Requirement R5R9, but did so more than 110 calendar days, but less than or equal to 120 calendar days;. OR The Responsible Entity hadresponsible entity failed	The Responsible Entityresponsible entity failed to have an unaffiliated third party review the evaluation performed under Requirement R4R8 and the security plan(s) developed under Requirement R5R9 in more than 120 calendar days;. OR The Responsible Entity failed to have an unaffiliated third party

		Violation Severity Levels			
		Lower VSL	Moderate VSL	High VSL	Severe VSL
		The Responsible Entityresponsible entity had an unaffiliated third party review the evaluation performed under Requirement R4R8 and the security plan(s) developed under Requirement R5R9 and modified or documented the reason for not modifying the security plan(s) as specified in Part 6.310.3, but did so more than 690 calendar days and less than or equal to 7080 calendar days following completion of the third party review.	had an unaffiliated third party review the evaluation performed under Requirement R4R8 and the security plan(s) developed under Requirement R5R9 and modified or documented the reason for not modifying the security plan(s) as specified in Part 6.310.3, but did so more than 70 calendar days and less than or equal to 80 calendar days following completion of the third party review. OR The responsible entity had an unaffiliated third party review the evaluation performed under Requirement R8 and the security plan(s) developed under Requirement R9, but did not document the reason for not modifying the security plan(s) as specified in Part 10.3.	to have an unaffiliated third party review the evaluation performed under Requirement R4R8 and the security plan(s) developed under Requirement R5 and modified or documented the reason for not modifying the security plan(s) as specified in Part 6.3 but did so more than 80 calendar days following completion of the third party review;R9. OR The Responsible Entityresponsible entity had an unaffiliated third party review the evaluation performed under Requirement R4R8 and the security plan(s) developed under Requirement R5R9, but did not document the reason for not modifying the security plan(s) as specified infailed to implement procedures for	review the evaluation performed under Requirement R4 and the security plan(s) developed under Requirement R5; OR The Responsible Entity had an unaffiliated third party review the evaluation performed under Requirement R4 and the security plan(s) developed under Requirement R5 but failed to implement procedures for protecting information per Part 6.4.

		Violation Severity Levels			
		Lower VSL	Moderate VSL	High VSL	Severe VSL
				protecting information per Part ~~6.3~~10.4.	

D. Regional Variances

None.

E. Interpretations

None.

F. Associated Documents

~~None.~~

CIP-014-4 Implementation Plan

CIP-014-4 Technical Rationale Document

Version History

Version	Date	Action	Change Tracking
1	October 1, 2015	Effective Date	New
2	April 16, 2015	Revised to meet FERC Order 802 directive to remove “widespread”.	Revision
2	May 7, 2015	Adopted by the NERC Board of Trustees	
2	July 14, 2015	FERC Letter Order in Docket No. RD15-4-000 approving CIP-014-2	
3	January 19, 2022	Revised to remove Compliance Section 1.4	Revision
3	June 16, 2022	FERC Letter Order in Docket No. RD22-3-000 approving Modifications to CIP-014-3	Revision
3	June 16,2022	Effective Date	Revision
4	TBD	Revisions made by the Project 2023-06 drafting team	Revision

Guidelines and Technical Basis

Section 4Attachment 1 — Applicability Criteria

The purpose of Reliability Standard CIP-014 is to protect Transmission stations and Transmission substations, and their associated primary control centers that if rendered inoperable or damaged as a result of a physical attack could result in instability, uncontrolled separation, or Cascading within an Interconnection. To properly include those entities that own or operate such Facilities, the Reliability Standard CIP-014 first applies to Transmission Owners that own Transmission Facilities that meet the specific criteria in Applicability Section 4.1.1.1 through 4.1.1.4. The Facilities described in Applicability Section 4.1.1.1 through 4.1.1.4 mirror those Transmission Facilities that meet the bright line criteria for "Medium Impact" Transmission Facilities under Attachment 1 of Reliability Standard CIP-002-5.1. Each Transmission Owner that owns Transmission Facilities that meet the criteria in Section 4.1.1.1 through 4.1.1.4 is required to perform a risk assessment as specified in Requirement R1 to identify its Transmission stations and Transmission substations, and their associated primary control centers, that if rendered inoperable or damaged as a result of a physical attack could result in instability, uncontrolled separation, or Cascading within an Interconnection. The Standard Drafting Team (SDT) expects this population will be small and that many Transmission Owners that meet the applicability of this standard will not actually identify any such Facilities. Only those Transmission Owners with Transmission stations or Transmission substations identified in the risk assessment (and verified under Requirement R2) have performance obligations under Requirements R3 through R6.

This standard also applies to Transmission Operators. A Transmission Operator's obligations under the standard, however, are only triggered if the Transmission Operator is notified by an applicable Transmission Owner under Requirement R3 that the Transmission Operator operates a primary control center that operationally controls a Transmission station(s) or Transmission substation(s) identified in the Requirement R1 risk assessment. A primary control center operationally controls a Transmission station or Transmission substation when the control center's electronic actions can cause direct physical action at the identified Transmission station or Transmission substation, such as opening a breaker, as opposed to a control center that only has information from the Transmission station or Transmission substation and must coordinate direct action through another entity. Only Transmission Operators who are notified that they have primary control centers under this standard have performance obligations under Requirements R4 through R6. In other words, primary control center for purposes of this Standard is the control center that the Transmission Owner or Transmission Operator, respectively, uses as its primary, permanently manned site to physically operate a Transmission station or Transmission substation that is identified in Requirement R1 and verified in Requirement R2. Control centers that provide back-up capability are not applicable, as they are a form of resiliency and intentionally redundant.

The SDT considered several options for bright line criteria that could be used to determine applicability and provide an initial threshold that defines the set of Transmission stations and Transmission substations that would meet the directives of the FERC order on physical security (*i.e.*, those that could cause instability, uncontrolled separation, or Cascading within an

~~Interconnection). The SDT determined that using the criteria for Medium Impact Transmission Facilities in Attachment 1 of CIP-002-5.1 would provide a conservative threshold for defining which Transmission stations and Transmission substations must be included in the risk assessment in Requirement R1 of CIP-014. Additionally, the SDT concluded that using the CIP-002-5.1 Medium Impact criteria was appropriate because it has been approved by stakeholders, NERC, and FERC, and its use provides a technically sound basis to determine which Transmission Owners should conduct the risk assessment. As described in CIP-002-5.1, the failure of a Transmission station or Transmission substation that meets the Medium Impact criteria could have the capability to result in exceeding one or more Interconnection Reliability Operating Limits (IROLs). The SDT understands that using this bright line criteria to determine applicability may require some Transmission Owners to perform risk assessments under Requirement R1 that will result in a finding that none of their Transmission stations or Transmission substations would pose a risk of instability, uncontrolled separation, or Cascading within an Interconnection. However, the SDT determined that higher bright lines could not be technically justified to ensure inclusion of all Transmission stations and Transmission substations, and their associated primary control centers that, if rendered inoperable or damaged as a result of a physical attack could result in instability, uncontrolled separation, or Cascading within an Interconnection. Further guidance and technical basis for the bright line criteria for Medium Impact Facilities can be found in the Guidelines and Technical Basis section of CIP-002-5.1.~~

~~Additionally, the SDT determined that it was not necessary to include Generator Operators and Generator Owners in the Reliability Standard. First, Transmission stations or Transmission substations interconnecting generation facilities are considered when determining applicability. Transmission Owners will consider those Transmission stations and Transmission substations that include a Transmission station on the high side of the Generator Step-up transformer (GSU) using Applicability Section 4.1.1.1 and 4.1.1.2. As an example, a Transmission station or Transmission substation identified as a Transmission Owner facility that interconnects generation will be subject to the Requirement R1 risk assessment if it operates at 500kV or greater or if it is connected at 200 kV – 499kV to three or more other Transmission stations or Transmission substations and has an "aggregate weighted value" exceeding 3000 according to the table in Applicability Section 4.1.1.2. Second, the Transmission analysis or analyses conducted under Requirement R1 should take into account the impact of the loss of generation connected to applicable Transmission stations or Transmission substations. Additionally, the FERC order does not explicitly mention generation assets and is reasonably understood to focus on the most critical Transmission Facilities. The diagram below shows an example of a station.~~

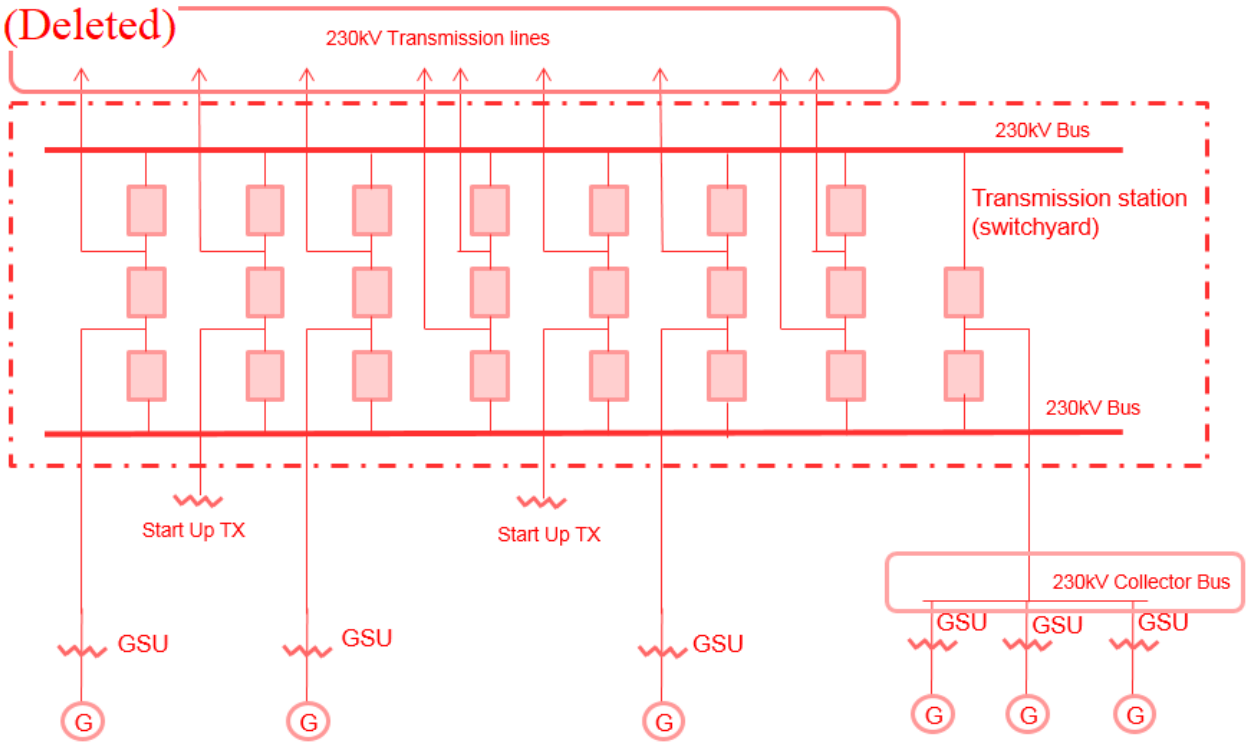

~~Also, the SDT uses the phrase "Transmission stations or Transmission substations" to recognize the existence of both stations and substations. Many entities in industry consider a substation to be a location with physical borders (i.e. fence, wall, etc.) that contains at least an autotransformer. Locations also exist that do not contain autotransformers, and many entities in industry refer to those locations as stations (switching stations or switchyards). Therefore, the SDT chose to use both "station" and "substation" to refer to the locations where groups of Transmission Facilities exist.~~

~~On the issue of joint ownership, the SDT recognizes that this issue is not unique to CIP-014, and expects that the applicable Transmission Owners and Transmission Operators will develop memorandums of understanding, agreements, Coordinated Functional Registrations, or procedures, etc., to designate responsibilities under CIP-014 when joint ownership is at issue, which is similar to what many entities have completed for other Reliability Standards.~~

~~The language contained in the applicability section regarding the collector bus is directly copied from CIP-002-5.1, Attachment 1, and has no additional meaning within the CIP-014 standard.~~

~~Requirement R1~~

~~The initial risk assessment required under Requirement R1 must be completed on or before the effective date of the standard. Subsequent risk assessments are to be performed at least once every 30 or 60 months depending on the results of the previous risk assessment per Requirement R1, Part 1.1. In performing the risk assessment under Requirement R1, the Transmission Owner should first identify their population of Transmission stations and Transmission substations that meet the criteria contained in Applicability Section 4.1.1.~~

Requirement R1 then requires the Transmission Owner to perform a risk assessment, consisting of a transmission analysis, to determine which of those Transmission stations and Transmission Substations if rendered inoperable or damaged could result in instability, uncontrolled separation, or Cascading within an Interconnection. The requirement is not to require identification of, and thus, not intended to bring within the scope of the standard a Transmission station or Transmission substation unless the applicable Transmission Owner determines through technical studies and analyses based on objective analysis, technical expertise, operating experience and experienced judgment that the loss of such facility would have a critical impact on the operation of the Interconnection in the event the asset is rendered inoperable or damaged. In the November 20, 2014 Order, FERC reiterated that "only an instability that has a "critical impact on the operation of the interconnection" warrants finding that the facility causing the instability is critical under Requirement R1." The Transmission Owner may determine the criteria for critical impact by considering, among other criteria, any of the following:

- Criteria or methodology used by Transmission Planners or Planning Coordinators in TPL-001-4, Requirement R6
- NERC EOP-004-2 reporting criteria
- Area or magnitude of potential impact

The standard does not mandate the specific analytical method for performing the risk assessment. The Transmission Owner has the discretion to choose the specific method that best suites its needs. As an example, an entity may perform a Power Flow analysis and stability analysis at a variety of load levels.

Performing Risk Assessments

The Transmission Owner has the discretion to select a transmission analysis method that fits its facts and system circumstances. To mandate a specific approach is not technically desirable and may lead to results that fail to adequately consider regional, topological, and system circumstances. The following guidance is only an example on how a Transmission Owner may perform a power flow and/or stability analysis to identify those Transmission stations and Transmission substations that if rendered inoperable or damaged as a result of a physical attack could result in instability, uncontrolled separation, or Cascading within an Interconnection. An entity could remove all lines, without regard to the voltage level, to a single Transmission station or Transmission substation and review the simulation results to assess system behavior to determine if Cascading of Transmission Facilities, uncontrolled separation, or voltage or frequency instability is likely to occur over a significant area of the Interconnection. Using engineering judgment, the Transmission Owner (possibly in consultation with regional planning or operation committees and/or ISO/RTO committee input) should develop criteria (e.g. imposing a fault near the removed Transmission station or Transmission substation) to identify a contingency or parameters that result in potential instability, uncontrolled separation, or Cascading within an Interconnection. Regional consultation on these matters is likely to be helpful and informative, given that the inputs for the risk assessment and the attributes of what constitutes instability, uncontrolled separation, or Cascading within an Interconnection will

~~likely vary from region-to-region or from ISO-to-ISO based on topology, system characteristics, and system configurations. Criteria could also include post-contingency facilities loadings above a certain emergency rating or failure of a power flow case to converge. Available special protection systems (SPS), if any, could be applied to determine if the system experiences any additional instability which may result in uncontrolled separation. Example criteria may include:~~

~~(a) Thermal overloads beyond facility emergency ratings;~~

~~(b) Voltage deviation exceeding ± 10%; or~~

~~(c) Cascading outage/voltage collapse; or~~

~~(d) Frequency below under-frequency load-shed points~~

~~Periodicity~~

~~A Transmission Owner who identifies one or more Transmission stations or Transmission substations (as verified under Requirement R2) that if rendered inoperable or damaged could result in instability, uncontrolled separation, or Cascading within an Interconnection is required to conduct a risk assessment at least once every 30 months. This period ensures that the risk assessment remains current with projected conditions and configurations in the planned system. This risk assessment, as the initial assessment, must consider applicable planned Transmission stations and Transmission substations to be in service within 24 months. The 30 month timeframe aligns with the 24 month planned to be in service date because the Transmission Owner is provided the flexibility, depending on its planning cycle and the frequency in which it may plan to construct a new Transmission station or Transmission substation to more closely align these dates. The requirement is to conduct the risk assessment at least once every 30 months, so for a Transmission Owner that believes it is better to conduct a risk assessment once every 24 months, because of its planning cycle, it has the flexibility to do so.~~

~~Transmission Owners that have not identified any Transmission stations or Transmission substations (as verified under Requirement R2) that if rendered inoperable or damaged could result in instability, uncontrolled separation, or Cascading within an Interconnection are unlikely to see changes to their risk assessment in the Near-Term Planning Horizon. Consequently, a 60 month periodicity for completing a subsequent risk assessment is specified.~~

~~Identification of Primary Control Centers~~

~~After completing the risk assessment specified in Requirement R1, it is important to additionally identify the primary control center that operationally controls each Transmission station or Transmission substation that if rendered inoperable or damaged could result in instability, uncontrolled separation, or Cascading within an Interconnection. A primary control center "operationally controls" a Transmission station or Transmission substation when the control center's electronic actions can cause direct physical actions at the identified Transmission station and Transmission substation, such as opening a breaker.~~

~~Requirement R2~~

This requirement specifies verification of the risk assessment performed under Requirement R1 by an entity other than the owner or operator of the Requirement R1 risk assessment.

A verification of the risk assessment by an unaffiliated third party, as specified in Requirement R2, could consist of:

1. Certifying that the Requirement R1 risk assessment considers the Transmission stations and Transmission substations identified in Applicability Section 4.1.1.
2. Review of the model used to conduct the risk assessment to ensure it contains sufficient system topology to identify Transmission stations and Transmission substations that if rendered inoperable or damaged could cause instability, uncontrolled separation, or Cascading within an Interconnection.
3. Review of the Requirement R1 risk assessment methodology.

This requirement provides the flexibility for a Transmission Owner to select from unaffiliated registered and non-registered entities with transmission planning or analysis experience to perform the verification of the Requirement R1 risk assessment. The term unaffiliated means that the selected verifying entity cannot be a corporate affiliate (*i.e.*, the verifying or third party reviewer cannot be an entity that corporately controls, is controlled by or is under common control with, the Transmission Owner). The verifying entity also cannot be a division of the Transmission Owner that operates as a functional unit.

The prohibition on registered entities using a corporate affiliate to conduct the verification, however, does not prohibit a governmental entity (e.g., a city, a municipality, a U.S. federal power marketing agency, or any other political subdivision of U.S. or Canadian federal, state, or provincial governments) from selecting as the verifying entity another governmental entity within the same political subdivision. For instance, a U.S. federal power marketing agency may select as its verifier another U.S. federal agency to conduct its verification so long as the selected entity has transmission planning or analysis experience. Similarly, a Transmission Owner owned by a Canadian province can use a separate agency of that province to perform the verification. The verifying entity, however, must still be a third party and cannot be a division of the registered entity that operates as a functional unit.

Requirement R2 also provides that the "verification may occur concurrent with or after the risk assessment performed under Requirement R1." This provision is designed to provide the Transmission Owner the flexibility to work with the verifying entity throughout (*i.e.*, concurrent with) the risk assessment, which for some Transmission Owners may be more efficient and effective. In other words, a Transmission Owner could collaborate with their unaffiliated verifying entity to perform the risk assessment under Requirement R1 such that both Requirement R1 and Requirement R2 are satisfied concurrently. The intent of Requirement R2 is to have an entity other than the owner or operator of the facility to be involved in the risk assessment process and have an opportunity to provide input. Accordingly, Requirement R2 is designed to allow entities the discretion to have a two-step process, where the Transmission Owner performs the risk assessment and subsequently has a third party review that assessment, or a one-step process, where the entity collaborates with a third party to perform the risk assessment.

Characteristics to consider in selecting a third party reviewer could include:

- Registered Entity with applicable planning and reliability functions.
- Experience in power system studies and planning.
- The entity's understanding of the MOD standards, TPL standards, and facility ratings as they pertain to planning studies.
- The entity's familiarity with the Interconnection within which the Transmission Owner is located.

With respect to the requirement that Transmission owners develop and implement procedures for protecting confidential and sensitive information, the Transmission Owner could have a method for identifying documents that require confidential treatment. One mechanism for protecting confidential or sensitive information is to prohibit removal of sensitive or confidential information from the Transmission Owner's site. Transmission Owners could include such a prohibition in a non-disclosure agreement with the verifying entity.

A Technical feasibility study is not required in the Requirement R2 documentation of the technical basis for not modifying the identification in accordance with the recommendation.

On the issue of the difference between a verifier in Requirement R2 and a reviewer in Requirement R6, the SDT indicates that the verifier will confirm that the risk assessment was completed in accordance with Requirement R1, including the number of Transmission stations and substations identified, while the reviewer in Requirement R6 is providing expertise on the manner in which the evaluation of threats was conducted in accordance with Requirement R4, and the physical security plan in accordance with Requirement R5. In the latter situation there is no verification of a technical analysis, rather an application of experience and expertise to provide guidance or recommendations, if needed.

Parts 2.4 and 6.4 require the entities to have procedures to protect the confidentiality of sensitive or confidential information. Those procedures may include the following elements:

1. Control and retention of information on site for third party verifiers/reviewers.
2. Only "need to know" employees, etc., get the information.
3. Marking documents as confidential
4. Securely storing and destroying information when no longer needed.
5. Not releasing information outside the entity without, for example, General Counsel sign-off.

Requirement R3

Some Transmission Operators will have obligations under this standard for certain primary control centers. Those obligations, however, are contingent upon a Transmission Owner first completing the risk assessment specified by Requirement R1 and the verification specified by Requirement R2. Requirement R3 is intended to ensure that a Transmission Operator that has operational control of a primary control center identified in Requirement R1 receive notice so

that the Transmission Operator may fulfill the rest of the obligations required in Requirements R4 through R6. Since the timing obligations in Requirements R4 through R6 are based upon completion of Requirement R2, the Transmission Owner must also include within the notice the date of completion of Requirement R2. Similarly, the Transmission Owner must notify the Transmission Operator of any removals from identification that result from a subsequent risk assessment under Requirement R1 or as a result of the verification process under Requirement R2.

Requirement R4

This requirement requires owners and operators of facilities identified by the Requirement R1 risk assessment and that are verified under Requirement R2 to conduct an assessment of potential threats and vulnerabilities to those Transmission stations, Transmission substations, and primary control centers using a tailored evaluation process. Threats and vulnerabilities may vary from facility to facility based on any number of factors that include, but are not limited to, location, size, function, existing physical security protections, and attractiveness as a target.

In order to effectively conduct a threat and vulnerability assessment, the asset owner may be the best source to determine specific site vulnerabilities, but current and evolving threats may best be determined by others in the intelligence or law enforcement communities. A number of resources have been identified in the standard, but many others exist and asset owners are not limited to where they may turn for assistance. Additional resources may include state or local fusion centers, U.S. Department of Homeland Security, Federal Bureau of Investigations (FBI), Public Safety Canada, Royal Canadian Mounted Police, and InfraGard chapters coordinated by the FBI.

The Responsible Entity is required to take a number of factors into account in Parts 4.1 to 4.3 in order to make a risk-based evaluation under Requirement R4.

To assist in determining the current threat for a facility, the prior history of attacks on similarly protected facilities should be considered when assessing probability and likelihood of occurrence at the facility in question.

Resources that may be useful in conducting threat and vulnerability assessments include:

- NERC Security Guideline for the Electricity Sector: Physical Security.
- NERC Security Guideline: Physical Security Response.
- ASIS International General Risk Assessment Guidelines.
- ASIS International Facilities Physical Security Measure Guideline.
- ASIS International Security Management Standard: Physical Asset Protection.
- Whole Building Design Guide - Threat/Vulnerability Assessments.

Requirement R5

This requirement specifies development and implementation of a security plan(s) designed to protect against attacks to the facilities identified in Requirement R1 based on the assessment performed under Requirement R4.

Requirement R5 specifies the following attributes for the physical security plan:

- *Resiliency or security measures designed collectively to deter, detect, delay, assess, communicate, and respond to potential physical threats and vulnerabilities identified during the evaluation conducted in Requirement R4.*

  Resiliency may include, among other things:

  a. System topology changes,

  b. Spare equipment,

  c. Construction of a new Transmission station or Transmission substation.

  While most security measures will work together to collectively harden the entire site, some may be allocated to protect specific critical components. For example, if protection from gunfire is considered necessary, the entity may only install ballistic protection for critical components, not the entire site.

- *Law enforcement contact and coordination information.*

  Examples of such information may be posting 9-1-1 for emergency calls and providing substation safety and familiarization training for local and federal law enforcement, fire department, and Emergency Medical Services.

- *A timeline for executing the physical security enhancements and modifications specified in the physical security plan.*

  Entities have the flexibility to prioritize the implementation of the various resiliency or security enhancements and modifications in their security plan according to risk, resources, or other factors. The requirement to include a timeline in the physical security plan for executing the actual physical security enhancements and modifications does not also require that the enhancements and modifications be completed within 120 days. The actual timeline may extend beyond the 120 days, depending on the amount of work to be completed.

- *Provisions to evaluate evolving physical threats, and their corresponding security measures, to the*Applicable Transmission station(s), or Transmission substation(s), *or primary control center(s).* are those that meet any of the following criteria:

1. Transmission Facilities operated at 500 kV or higher. For the purpose of this criterion, the collector bus for a generation plant is not considered a Transmission Facility, but is part of the generation interconnection Facility.

2. Transmission Facilities that are operating between 200 kV and 499 kV at a single station or substation, where the station or substation is connected at 200 kV or higher voltages to three or more other Transmission stations or substations and has an "aggregate weighted value" exceeding 3000 according to the table below. The "aggregate weighted value" for a

single station or substation is determined by summing the "weight value per line" shown in the table below for each incoming and each outgoing BES Transmission Line that is connected to another Transmission station or substation. For the purpose of this criterion, the collector bus for a generation plant is not considered a Transmission Facility, but is part of the generation interconnection Facility.

A registered entity's physical security plan should include processes and responsibilities for obtaining and handling alerts, intelligence, and threat warnings from various sources. Some of these sources could include the ERO, ES-ISAC, and US and/or Canadian federal agencies. This information should be used to reevaluate or consider changes in the security plan and corresponding security measures of the security plan found in R5.

Incremental changes made to the physical security plan prior to the next required third party review do not require additional third party reviews.

Voltage Value of a Line	Weight Value per Line
less than 200 kV (not applicable)	(not applicable)
200 kV to 299 kV	700
300 kV to 499 kV	1300
500 kV and above	N/A

Requirement R6

This requirement specifies review by an entity other than the Transmission Owner or Transmission Operator with appropriate expertise for the evaluation performed according to Requirement R4 and the security plan(s) developed according to Requirement R5. As with Requirement R2, the term unaffiliated means that the selected third party reviewer cannot be a corporate affiliate (*i.e.*, the third party reviewer cannot be an entity that corporately controls, is controlled by or is under common control with, the Transmission Operator). A third party reviewer also cannot be a division of the Transmission Operator that operates as a functional unit.

As noted in the guidance for Requirement R2, the prohibition on registered entities using a corporate affiliate to conduct the review, however, does not prohibit a governmental entity from selecting as the third party reviewer another governmental entity within the same political subdivision. For instance, a city or municipality may use its local enforcement agency, so long as the local law enforcement agency satisfies the criteria in Requirement R6. The third party reviewer, however, must still be a third party and cannot be a division of the registered entity that operates as a functional unit.

The Responsible Entity can select from several possible entities to perform the review:

- *An entity or organization with electric industry physical security experience and whose review staff has at least one member who holds either a Certified Protection Professional (CPP) or Physical Security Professional (PSP) certification.*

  In selecting CPP and PSP for use in this standard, the SDT believed it was important that if a private entity such as a consulting or security firm was engaged to conduct the third party review, they must tangibly demonstrate competence to conduct the review. This includes electric industry physical security experience and either of the premier security industry certifications sponsored by ASIS International. The ASIS certification program was initiated in 1977, and those that hold the CPP certification are board certified in security management. Those that hold the PSP certification are board certified in physical security.

- *An entity or organization approved by the ERO.*

- *A governmental agency with physical security expertise.*

- *An entity or organization with demonstrated law enforcement, government, or military physical security expertise.*

As with the verification under Requirement R2, Requirement R6 provides that the "review may occur concurrently with or after completion of the evaluation performed under Requirement R4 and the security plan development under Requirement R5." This provision is designed to provide applicable Transmission Owners and Transmission Operators the flexibility to work with the third party reviewer throughout (*i.e.*, concurrent with) the evaluation performed according to Requirement R4 and the security plan(s) developed according to Requirement R5, which for some Responsible Entities may be more efficient and effective. In other words, a Transmission Owner or Transmission Operator could collaborate with their unaffiliated third party reviewer to perform an evaluation of potential threats and vulnerabilities (Requirement R4) and develop a security plan (Requirement R5) to satisfy Requirements R4 through R6 simultaneously. The intent of Requirement R6 is to have an entity other than the owner or operator of the facility to be involved in the Requirement R4 evaluation and the development of the Requirement R5 security plans and have an opportunity to provide input on the evaluation and the security plan. Accordingly, Requirement R6 is designed to allow entities the discretion to have a two-step process, where the Transmission Owner performs the evaluation and develops the security plan itself and then has a third party review that assessment, or a one-step process, where the entity collaborates with a third party to perform the evaluation and develop the security plan.

~~Timeline~~

(Deleted graphics)-014-1 – Physical Security Process Flow

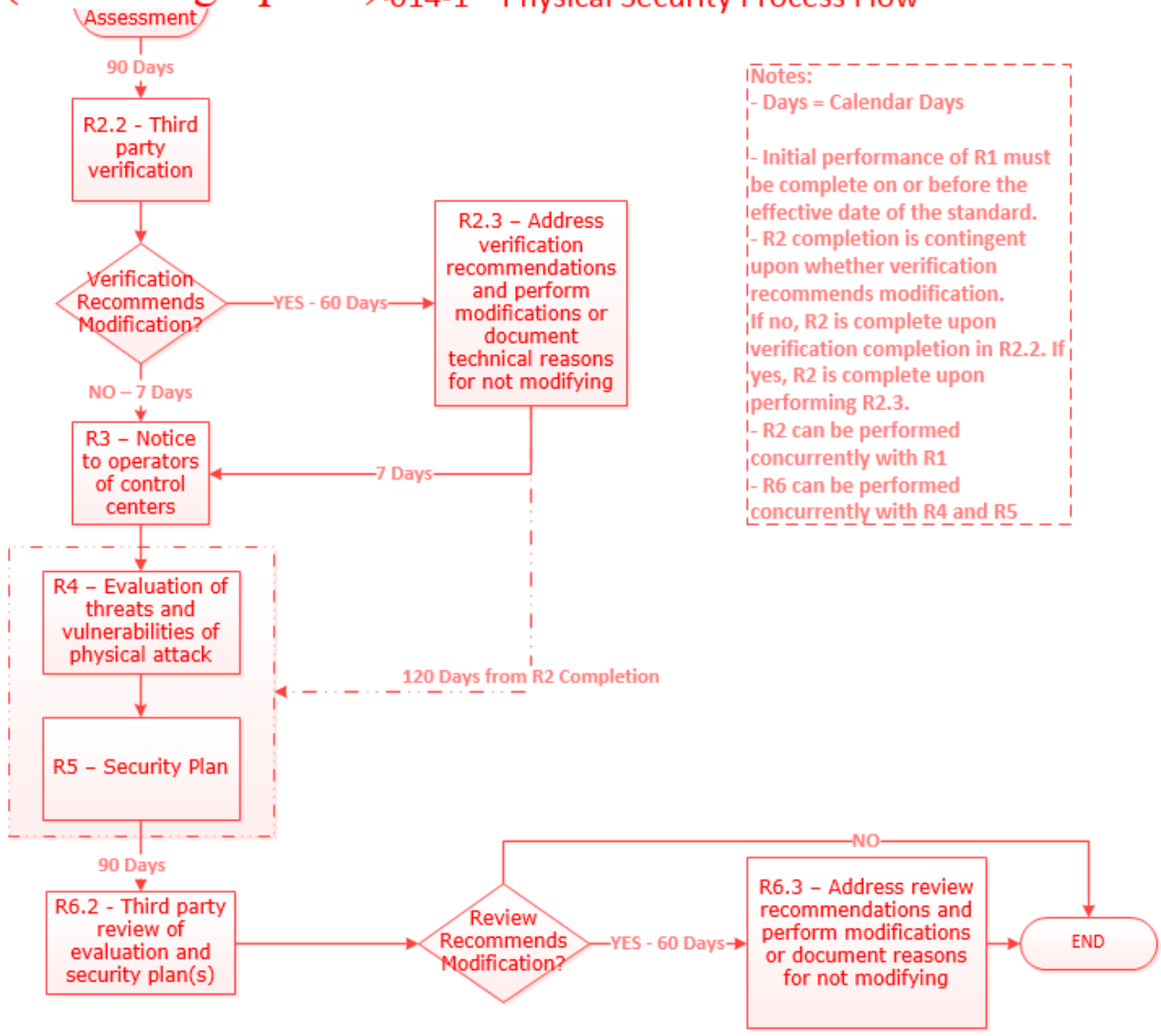

Rationale

During development of this standard, text boxes were embedded within the standard to explain the rationale for various parts of the standard. Upon BOT approval, the text from the rationale text boxes was moved to this section.

Rationale for Requirement R1:
This requirement meets the FERC directive from paragraph 6 of its March 7, 2014 order on physical security to perform a risk assessment to identify which facilities if rendered inoperable or damaged could impact an Interconnection through instability, uncontrolled separation, or cascading failures. The requirement is not intended to bring within the scope of the standard a Transmission station or Transmission substation unless the applicable Transmission Owner determines through technical studies and analyses based on objective analysis, technical expertise, operating experience and experienced judgment that the loss of such facility would have a critical impact on the operation of the Interconnection in the event the asset is rendered inoperable or damaged. In the November 20, 2014 Order, FERC reiterated that "only an instability that has a "critical impact on the operation of the interconnection" warrants finding that the facility causing the instability is critical under Requirement R1." The Transmission Owner may determine the criteria for critical impact by considering, among other criteria, any of the following:

- Criteria or methodology used by Transmission Planners or Planning Coordinators in TPL-001-4, Requirement R6
- NERC EOP-004-2 reporting criteria
- Area or magnitude of potential impact

Requirement R1 also meets the FERC directive for periodic reevaluation of the risk assessment by requiring the risk assessment to be performed every 30 months (or 60 months for an entity that has not identified in a previous risk assessment any Transmission stations or Transmission substations that if rendered inoperable or damaged could result in instability, uncontrolled separation, or Cascading within an Interconnection).

After identifying each Transmission station and Transmission substation that meets the criteria in Requirement R1, it is important to additionally identify the primary control center that operationally controls that Transmission station or Transmission substation (*i.e.*, the control center whose electronic actions can cause direct physical actions at the identified Transmission station and Transmission substation, such as opening a breaker, compared to a control center that only has the ability to monitor the Transmission station and Transmission substation and, therefore, must coordinate direct physical action through another entity).

Rationale for Requirement R2:
This requirement meets the FERC directive from paragraph 11 in the order on physical security requiring verification by an entity other than the owner or operator of the risk assessment performed under Requirement R1.

This requirement provides the flexibility for a Transmission Owner to select registered and non-registered entities with transmission planning or analysis experience to perform the verification of the Requirement R1 risk assessment. The term "unaffiliated" means that the selected verifying entity cannot be a corporate affiliate (*i.e.*, the verifying entity cannot be an entity that controls, is controlled by, or is under common control with, the Transmission owner). The verifying entity also cannot be a division of the Transmission Owner that operates as a functional unit. The term "unaffiliated" is not intended to prohibit a governmental entity from using another government entity to be a verifier under Requirement R2.

Requirement R2 also provides the Transmission Owner the flexibility to work with the verifying entity throughout the Requirement R1 risk assessment, which for some Transmission Owners may be more efficient and effective. In other words, a Transmission Owner could coordinate with their unaffiliated verifying entity to perform a Requirement R1 risk assessment to satisfy both Requirement R1 and Requirement R2 concurrently.

Planning Coordinator is a functional entity listed in Part 2.1. The Planning Coordinator and Planning Authority are the same entity as shown in the NERC Glossary of Terms Used in NERC Reliability Standards.

Rationale for Requirement R3:

Some Transmission Operators will have obligations under this standard for certain primary control centers. Those obligations, however, are contingent upon a Transmission Owner first identifying which Transmission stations and Transmission substations meet the criteria specified by Requirement R1, as verified according to Requirement R2. This requirement is intended to ensure that a Transmission Operator that has operational control of a primary control center identified in Requirement R1, Part 1.2 of a Transmission station or Transmission substation verified according to Requirement R2 receives notice of such identification so that the Transmission Operator may timely fulfill its resulting obligations under Requirements R4 through R6. Since the timing obligations in Requirements R4 through R6 are based upon completion of Requirement R2, the Transmission Owner must also include notice of the date of completion of Requirement R2. Similarly, the Transmission Owner must notify the Transmission Operator of any removals from identification that result from a subsequent risk assessment under Requirement R1 or the verification process under Requirement R2.

Rationale for Requirement R4:

This requirement meets the FERC directive from paragraph 8 in the order on physical security that the reliability standard must require tailored evaluation of potential threats and vulnerabilities to facilities identified in Requirement R1 and verified according to Requirement R2. Threats and vulnerabilities may vary from facility to facility based on factors such as the facility's location, size, function, existing protections, and attractiveness of the target. As such, the requirement does not mandate a one-size-fits-all approach but requires entities to account for the unique characteristics of their facilities.

Requirement R4 does not explicitly state when the evaluation of threats and vulnerabilities must occur or be completed. However, Requirement R5 requires that the entity's security plan(s), which is dependent on the Requirement R4 evaluation, must be completed within 120 calendar days following completion of Requirement R2. Thus, an entity has the flexibility when to complete the Requirement R4 evaluation, provided that it is completed in time to comply with the requirement in Requirement R5 to develop a physical security plan 120 calendar days following completion of Requirement R2.

Rationale for Requirement R5:

This requirement meets the FERC directive from paragraph 9 in the order on physical security requiring the development and implementation of a security plan(s) designed to protect against attacks to the facilities identified in Requirement R1 based on the assessment performed under Requirement R4.

Rationale for Requirement R6:

This requirement meets the FERC directive from paragraph 11 in the order on physical security requiring review by an entity other than the owner or operator with appropriate expertise of the evaluation performed according to Requirement R4 and the security plan(s) developed according to Requirement R5.

As with the verification required by Requirement R2, Requirement R6 provides Transmission Owners and Transmission Operators the flexibility to work with the third party reviewer throughout the Requirement R4 evaluation and the development of the Requirement R5 security plan(s). This would allow entities to satisfy their obligations under Requirement R6 concurrent with the satisfaction of their obligations under Requirements R4 and R5.

3. Transmission Facilities at a single station or substation location that are identified by its Reliability Coordinator, Planning Coordinator, or Transmission Planner as critical to the derivation of Interconnection Reliability Operating Limits (IROLs) and their associated contingencies.

4. Transmission Facilities identified as essential to meeting Nuclear Plant Interface Requirements (NPIRs).

Attachment 1 – Applicability Criteria

Applicable Transmission station(s) or Transmission substation(s) are those that meet any of the following criteria:

1. Transmission Facilities operated at 500 kV or higher. For the purpose of this criterion, the collector bus for a generation plant is not considered a Transmission Facility, but is part of the generation interconnection Facility.

2. Transmission Facilities that are operating between 200 kV and 499 kV at a single station or substation, where the station or substation is connected at 200 kV or higher voltages to three or more other Transmission stations or substations and has an "aggregate weighted value" exceeding 3,000 according to the table below. The "aggregate weighted value" for a single station or substation is determined by summing the "weight value per line" shown in the table below for each incoming and each outgoing Bulk Electric System Transmission Line that is connected to another Transmission station or substation. For the purpose of this criterion, the collector bus for a generation plant is not considered a Transmission Facility, but is part of the generation interconnection Facility.

Voltage Value of a Line	Weight Value per Line
less than 200 kV (not applicable)	(not applicable)
200 kV to 299 kV	700
300 kV to 499 kV	1,300
500 kV and above	N/A

3. Transmission Facilities at a single station or substation location that are identified by their Reliability Coordinator, Planning Coordinator, or Transmission Planner as critical to the derivation of Interconnection Reliability Operating Limits (IROLs) and their associated contingencies.

4. Transmission Facilities identified as essential to meeting Nuclear Plant Interface Requirements (NPIRs).

NERC
NORTH AMERICAN ELECTRIC RELIABILITY CORPORATION

Implementation Plan

Project 2023-06 CIP-014 Risk Assessment Refinement
Reliability Standard CIP-014-4

Applicable Standard(s)

- CIP-014-4 Physical Security

Requested Retirement(s)

- CIP-014-3 Physical Security

Applicable Entities

- Transmission Owner that owns or jointly owns one or more Transmission stations or Transmission substations that meet the applicability criteria of Attachment 1.
- Transmission Operator

  Exemption: Facilities in a "protected area," as defined in 10 C.F.R. § 73.2, within the scope of a security plan approved or accepted by the Nuclear Regulatory Commission are not subject to this Standard; or Facilities within the scope of a security plan approved or accepted by the Canadian Nuclear Safety Commission are not subject to this Reliability Standard.

General Considerations

In developing this Implementation Plan, the Drafting Team (DT) has determined that 24 calendar months for the CIP-014-4 implementation plan would allow adequate time for Transmission Owners and Transmission Operators to determine applicability, develop criteria, write or revise methodologies, perform assessments, and procure unaffiliated third parties for risk assessment verification (which some Transmission Owners have performed concurrently with their risk assessment analyses).

In determining an appropriate time frame, the DT considered the severity of the concerns highlighted in the FERC's December 2022 order, which directed NERC to evaluate the effectiveness of CIP-014-3 in mitigating the risks to the bulk power system associated with physical attacks. (1) (*N. Am. Elec. Reliability Corp*., 181 FERC ¶ 61,230 (2022) (December 2022 Order); (2) the recommendations of the NERC report entitled *Evaluation of the Physical Security Reliability Standard and Physical Security Attacks to the Bulk-Power System* (*See* NERC Report on CIP-014-3.pdf, filed with FERC on April 14, 2023); and (3) the Standard Authorization Request requirement that the DT correct any discrepancies between the study period, frequency of study, and the base case(s) a TO uses. The DT determined that an Implementation Plan schedule of 24 calendar months appropriately balances the reliability need and risks against the time and resources required of

entities to determine applicability, develop criteria, write or revise methodologies, perform assessments, and procure unaffiliated third parties for risk assessment verification.

Effective Date of CIP-014-4

Where approval by an applicable governmental authority (AGA) is required, Reliability Standard CIP-014-4 shall become effective on the first day of the first calendar quarter that is 24 calendar months after the effective date of the AGA's order approving the standard or as otherwise provided for by the AGA.

Where approval by an AGA is not required, Reliability Standard CIP-014-4 shall become effective on the first day of the first calendar quarter that is 24 calendar months after the date the standard is adopted by the NERC Board of Trustees or as otherwise provided for in that jurisdiction.

Initial Performance of Periodic Requirements

The initial risk assessment required by Reliability Standard CIP-014-4 Requirement R5, must be completed on or before the effective date of the standard. Subsequent risk assessments shall be performed no later than 36 calendar months following the effective date of Reliability Standard CIP-014-4.

Retirement Date

Reliability Standard CIP-014-3 shall be retired immediately prior to the effective date of Reliability Standard CIP-014-4 in the particular jurisdiction in which the revised standard is becoming effective.

NERC
NORTH AMERICAN ELECTRIC RELIABILITY CORPORATION

Implementation Plan

Project 2023-06 CIP-014 Risk Assessment Refinement
Reliability Standard CIP-014-4

Applicable Standard(s)

- CIP-014-4 Physical Security

Requested Retirement(s)

- CIP-014-3 Physical Security

Applicable Entities

- Transmission Owner ~~(TO)~~ that owns or jointly owns one or more Transmission stations or Transmission substations that meet the applicability criteria of Attachment 1.
- Transmission Operator ~~(TOP)~~

  Exemption: Facilities in a "protected area," as defined in 10 C.F.R. § 73.2, within the scope of a security plan approved or accepted by the Nuclear Regulatory Commission are not subject to this Standard; or Facilities within the scope of a security plan approved or accepted by the Canadian Nuclear Safety Commission are not subject to this Reliability Standard.

General Considerations

~~The~~In developing this Implementation Plan, the Drafting Team (DT) has determined that 24 calendar months for the CIP-014-4 implementation plan would allow adequate time for Transmission Owners and Transmission Operators to determine applicability, develop criteria, write or revise methodologies, perform assessments, and procure unaffiliated third parties for risk assessment verification (which some Transmission Owners have performed concurrently with their risk assessment analyses).

In determining an appropriate time frame, the DT considered the severity of the concerns highlighted in the FERC's December 2022 order, which directed NERC to evaluate the effectiveness of CIP-014-3 in mitigating the risks to the bulk power system associated with physical attacks. (1) (*N. Am. Elec. Reliability Corp*., 181 FERC ¶ 61,230 (2022) (December 2022 Order); (2) the recommendations of the NERC report entitled *Evaluation of the Physical Security Reliability Standard and Physical Security Attacks to the Bulk-Power System* (*See* NERC Report on CIP-014-3.pdf, filed with FERC on April 14, 2023); and (3) the Standard Authorization Request requirement that the DT correct any discrepancies between the study period, frequency of study, and the base case(s) a TO uses. The DT determined that an Implementation Plan schedule of 24 calendar months appropriately balances the reliability need and risks against the time and resources required of

entities to determine applicability, develop criteria, write or revise methodologies, perform assessments, and procure unaffiliated third parties for risk assessment verification.

Effective Date of CIP-014-4

Where approval by an aApplicable gGovernmental aAuthority (AGA) is required, Reliability Standard CIP-014-4 shall become effective on the first day of the first calendar quarter that is 24 calendar months after the effective date of the ~~Applicable Governmental Authority's~~AGA's order approving the standard or as otherwise provided for by the ~~Applicable Governmental Authority~~AGA.

Where approval by an ~~Applicable Governmental Authority~~AGA is not required, Reliability Standard CIP-014-4 shall become effective on the first day of the first calendar quarter that is 24 calendar months after the date the standard is adopted by the NERC Board of Trustees or as otherwise provided for in that jurisdiction.

Initial Performance of Periodic Requirements

The initial risk assessment required by Reliability Standard CIP-014-4 Requirement R5, must be completed on or before the effective date of the standard. Subsequent risk assessments shall be performed no later than 36 calendar months following the effective date of Reliability Standard CIP-014-4.

Retirement Date

Reliability Standard CIP-014-3 shall be retired immediately prior to the effective date of Reliability Standard CIP-~~014~~-014-4 in the particular jurisdiction in which the revised standard is becoming effective.

NERC
NORTH AMERICAN ELECTRIC RELIABILITY CORPORATION

Violation Risk Factor and Violation Severity Level Justifications

Project 2023-06 CIP-014 Risk Assessment Refinement (CIP-014-4)

This document provides the drafting team's justification for assignment of violation risk factors (VRFs) and violation severity levels (VSLs) for each requirement in CIP-014-4 Physical Security. Each requirement is assigned a VRF and a VSL. These elements support the determination of an initial value range for the Base Penalty Amount regarding violations of requirements in FERC-approved Reliability Standards, as defined in the Electric Reliability Organizations (ERO) Sanction Guidelines. The drafting team applied the following NERC criteria and FERC Guidelines when developing the VRFs and VSLs for the requirements.

NERC Criteria for Violation Risk Factors

High Risk Requirement
A requirement that, if violated, could directly cause or contribute to Bulk Electric System instability, separation, or a cascading sequence of failures, or could place the Bulk Electric System at an unacceptable risk of instability, separation, or cascading failures; or, a requirement in a planning time frame that, if violated, could, under emergency, abnormal, or restorative conditions anticipated by the preparations, directly cause or contribute to Bulk Electric System instability, separation, or a cascading sequence of failures, or could place the Bulk Electric System at an unacceptable risk of instability, separation, or cascading failures, or could hinder restoration to a normal condition.

Medium Risk Requirement
A requirement that, if violated, could directly affect the electrical state or the capability of the Bulk Electric System, or the ability to effectively monitor and control the Bulk Electric System. However, violation of a medium risk requirement is unlikely to lead to Bulk Electric System instability, separation, or cascading failures; or, a requirement in a planning time frame that, if violated, could, under emergency, abnormal, or restorative conditions anticipated by the preparations, directly and adversely affect the electrical state or capability of the Bulk Electric System, or the ability to effectively monitor, control, or restore the Bulk Electric System. However, violation of a medium risk requirement is unlikely, under emergency, abnormal, or restoration conditions anticipated by the preparations, to lead to Bulk Electric System instability, separation, or cascading failures, nor to hinder restoration to a normal condition.

Lower Risk Requirement
A requirement that is administrative in nature and a requirement that, if violated, would not be expected to adversely affect the electrical state or capability of the Bulk Electric System, or the ability to effectively monitor and control the Bulk Electric System; or, a requirement that is administrative in nature and a requirement in a planning time frame that, if violated, would not, under the emergency, abnormal, or restorative conditions anticipated by the preparations, be expected to adversely affect the electrical state or capability of the Bulk Electric System, or the ability to effectively monitor, control, or restore the Bulk Electric System.

FERC Guidelines for Violation Risk Factors

Guideline (1) – Consistency with the Conclusions of the Final Blackout Report

FERC seeks to ensure that VRFs assigned to Requirements of Reliability Standards in these identified areas appropriately reflect their historical critical impact on the reliability of the Bulk-Power System. In the VSL Order, FERC listed critical areas (from the Final Blackout Report) where violations could severely affect the reliability of the Bulk-Power System:

- Emergency operations
- Vegetation management
- Operator personnel training
- Protection systems and their coordination
- Operating tools and backup facilities
- Reactive power and voltage control
- System modeling and data exchange
- Communication protocol and facilities
- Requirements to determine equipment ratings
- Synchronized data recorders
- Clearer criteria for operationally critical facilities
- Appropriate use of transmission loading relief.

Guideline (2) – Consistency within a Reliability Standard
FERC expects a rational connection between the sub-Requirement VRF assignments and the main Requirement VRF assignment.

Guideline (3) – Consistency among Reliability Standards
FERC expects the assignment of VRFs corresponding to Requirements that address similar reliability goals in different Reliability Standards would be treated comparably.

Guideline (4) – Consistency with NERC's Definition of the Violation Risk Factor Level
Guideline (4) was developed to evaluate whether the assignment of a particular VRF level conforms to NERC's definition of that risk level.

Guideline (5) – Treatment of Requirements that Co-mingle More Than One Obligation
Where a single Requirement co-mingles a higher risk reliability objective and a lesser risk reliability objective, the VRF assignment for such Requirements must not be watered down to reflect the lower risk level associated with the less important objective of the Reliability Standard.

NERC Criteria for Violation Severity Levels

VSLs define the degree to which compliance with a requirement was not achieved. Each requirement must have at least one VSL. While it is preferable to have four VSLs for each requirement, some requirements do not have multiple "degrees" of non-compliant performance and may have only one, two, or three VSLs.

VSLs should be based on NERC's overarching criteria shown in the table below:

Lower VSL	Moderate VSL	High VSL	Severe VSL
The performance or product measured almost meets the full intent of the requirement.	The performance or product measured meets the majority of the intent of the requirement.	The performance or product measured does not meet the majority of the intent of the requirement, but does meet some of the intent.	The performance or product measured does not substantively meet the intent of the requirement.

FERC Order of Violation Severity Levels

The FERC VSL guidelines are presented below, followed by an analysis of whether the VSLs proposed for each requirement in the standard meet the FERC Guidelines for assessing VSLs:

Guideline (1) – Violation Severity Level Assignments Should Not Have the Unintended Consequence of Lowering the Current Level of Compliance

Compare the VSLs to any prior levels of non-compliance and avoid significant changes that may encourage a lower level of compliance than was required when levels of non-compliance were used.

Guideline (2) – Violation Severity Level Assignments Should Ensure Uniformity and Consistency in the Determination of Penalties

A violation of a "binary" type requirement must be a "Severe" VSL.
Do not use ambiguous terms such as "minor" and "significant" to describe non-compliant performance.

Guideline (3) – Violation Severity Level Assignment Should Be Consistent with the Corresponding Requirement

VSLs should not expand on what is required in the requirement.

Guideline (4) – Violation Severity Level Assignment Should Be Based on a Single Violation, Not on a Cumulative Number of Violations

Unless otherwise stated in the requirement, each instance of non-compliance with a requirement is a separate violation. Section 4 of the Sanction Guidelines states that assessing penalties on a per violation per day basis is the "default" for penalty calculations.

VRF Justifications for CIP-014-4, Requirement R1	
Proposed VRF	**High**
NERC VRF Discussion	A VRF of higher is appropriate because the requirement, if violated, could directly cause or contribute to Bulk Electric System (BES) instability, separation, or a cascading sequence of failures, or could place the BES at an unacceptable risk of instability, separation, or cascading failures. The VRF is revised and unchanged from the last FERC approved version.
FERC VRF G1 Discussion Guideline 1- Consistency with Blackout Report	This VRF is consistent with the identified areas from the FERC list of critical areas in the Final Blackout Report.
FERC VRF G2 Discussion Guideline 2- Consistency within a Reliability Standard	The VRF for Requirement R1 is consistent with those connections between the sub-Requirement VRF assignments and the main Requirement VRF assignment.
FERC VRF G3 Discussion Guideline 3- Consistency among Reliability Standards	This VRF is consistent with other VRFs that address similar reliability goals in different Reliability Standards.
FERC VRF G4 Discussion Guideline 4- Consistency with NERC Definitions of VRFs	This VRF is consistent with the definition of a High VRF requirement per the criteria filed with FERC as part of the ERO's Sanctions Guidelines.
FERC VRF G5 Discussion Guideline 5- Treatment of Requirements that Co-mingle More	This requirement does not mingle a higher risk reliability objective and a lesser risk reliability objective. Therefore, the VRF reflects the risk of the whole requirement.

VRF Justifications for CIP-014-4, Requirement R1	
Proposed VRF	**High**
than One Obligation	

VSLs for CIP-014-4, Requirement R1			
Lower	**Moderate**	**High**	**Severe**
The Transmission Owner identified each applicable Transmission station(s) and Transmission substation(s) per Attachment 1, but did so after 36 calendar months, but less than or equal to 38 calendar months. OR The Transmission Owner identified each applicable Transmission station(s) and Transmission substation(s), but failed to identify less than or equal to 10% of the applicable Transmission station(s) and Transmission substation(s) per Attachment 1.	The Transmission Owner identified each applicable Transmission station(s) and Transmission substation(s) per Attachment 1, but did so after 38 calendar months, but less than or equal to 40 calendar months. OR The Transmission Owner identified each applicable Transmission station(s) and Transmission substation(s), but failed to identify more than 10% and less than or equal to 20% of the applicable Transmission station(s) and Transmission substation(s) per Attachment 1.	The Transmission Owner identified each applicable Transmission station(s) and Transmission substation(s) per Attachment 1, but did so after 40 calendar months, but less than or equal to 42 calendar months. OR The Transmission Owner identified each applicable Transmission station(s) and Transmission substation(s), but failed to identify more than 20% and less than or equal to 30% of the applicable Transmission station(s) and Transmission substation(s) per Attachment 1.	The Transmission Owner failed to identify each applicable Transmission station(s) and Transmission substation(s) per Attachment 1. OR The Transmission Owner identified each applicable Transmission station(s) and Transmission substation(s) per Attachment 1, but did so after more than 42 calendar months. OR The Transmission Owner identified each applicable Transmission station(s) and Transmission substation(s), but failed to identify more than 30% of the applicable Transmission station(s) and Transmission substation(s) per Attachment 1.

VSL Justifications for CIP-014-4, Requirement R1	
FERC VSL G1 Violation Severity Level Assignments Should Not Have the Unintended Consequence of Lowering the Current Level of Compliance	The proposed VSLs do not have the unintended consequence of lowering the level of compliance.
FERC VSL G2 Violation Severity Level Assignments Should Ensure Uniformity and Consistency in the Determination of Penalties Guideline 2a: The Single Violation Severity Level Assignment Category for "Binary" Requirements Is Not Consistent Guideline 2b: Violation Severity Level Assignments that Contain Ambiguous Language	The proposed VSLs are not binary and do not use any ambiguous terminology, thereby supporting uniformity and consistency in the determination of similar penalties for similar violations.
FERC VSL G3 Violation Severity Level Assignment Should Be Consistent with the Corresponding Requirement	The proposed VSLs use the same terminology as used in the associated requirement and are, therefore, consistent with the requirement.
FERC VSL G4 Violation Severity Level Assignment Should Be Based on A Single Violation, Not on A Cumulative Number of Violations	Each VSL is based on a single violation and not cumulative violations.

VRF Justifications for CIP-014-4, Requirement R2	
Proposed VRF	**Medium**
NERC VRF Discussion	A VRF of Medium is appropriate because, if violated, it could directly affect the electrical state or the capability of the BES, or the ability to effectively monitor and control the BES; however, a violation is unlikely to lead to BES instability, separation, or cascading failures.
FERC VRF G1 Discussion Guideline 1- Consistency with Blackout Report	This VRF is consistent with the identified areas from the FERC list of critical areas in the Final Blackout Report.
FERC VRF G2 Discussion Guideline 2- Consistency within a Reliability Standard	The VRF for Requirement R2 is consistent with those connections between the sub-Requirement VRF assignments and the main Requirement VRF assignment.
FERC VRF G3 Discussion Guideline 3- Consistency among Reliability Standards	This VRF is consistent with other VRFs that address similar reliability goals in different Reliability Standards.
FERC VRF G4 Discussion Guideline 4- Consistency with NERC Definitions of VRFs	This VRF is consistent with the definition of a Medium VRF requirement per the criteria filed with FERC as part of the ERO's Sanctions Guidelines.
FERC VRF G5 Discussion Guideline 5- Treatment of Requirements that Co-mingle More than One Obligation	This requirement does not mingle a higher risk reliability objective and a lesser risk reliability objective. Therefore, the VRF reflects the risk of the whole requirement.

VSLs for CIP-014-4, Requirement R2			
Lower	**Moderate**	**High**	**Severe**
N/A	N/A	N/A	The Transmission Owner with applicable Transmission station(s) or Transmission substation(s) identified in Requirement R1 did not identify existing Bulk Electric System Transmission station(s) and Bulk Electric System Transmission substation(s), irrespective of ownership, within 1500 feet or 457 meters (the shortest distance, measured substation fence line to substation fence line) of an applicable Transmission station or Transmission substation identified in Requirement R1.

VSL Justifications for CIP-014-4, Requirement R2	
FERC VSL G1 Violation Severity Level Assignments Should Not Have the Unintended Consequence of Lowering the Current Level of Compliance	This is a new Requirement and does not have the unintended consequence of lowering the current level of compliance.
FERC VSL G2 Violation Severity Level Assignments Should Ensure Uniformity and Consistency in the Determination of Penalties	The proposed VSLs are binary and do not use any ambiguous terminology, thereby supporting uniformity and consistency in the determination of similar penalties for similar violations. The new Requirement R2 is a binary requirement and thus only assigned a Severe VSL because the Transmission Owners either have or have not identified proximate Transmission station(s) and Transmission substation(s), irrespective of ownership, within 1,500 feet or 457 meters (the shortest distance, measured substation fence line to substation fence line) of an applicable Transmission station or Transmission substation identified in Requirement R1.

VSL Justifications for CIP-014-4, Requirement R2	
Guideline 2a: The Single Violation Severity Level Assignment Category for "Binary" Requirements Is Not Consistent Guideline 2b: Violation Severity Level Assignments that Contain Ambiguous Language	
FERC VSL G3 Violation Severity Level Assignment Should Be Consistent with the Corresponding Requirement	The proposed VSLs use the same terminology as used in the associated requirement and are, therefore, consistent with the requirement.
FERC VSL G4 Violation Severity Level Assignment Should Be Based on A Single Violation, Not on A Cumulative Number of Violations	Each VSL is based on a single violation and not cumulative violations.

VRF Justifications for CIP-014-4, Requirement R3	
Proposed VRF	**High**
NERC VRF Discussion	A VRF of higher is appropriate because the requirement, if violated, could directly cause or contribute to BES instability, separation, or a cascading sequence of failures, or could place the BES at an unacceptable risk of instability, separation, or cascading failures.
FERC VRF G1 Discussion Guideline 1- Consistency with	This VRF is consistent with the identified areas from the FERC list of critical areas in the Final Blackout Report.

VRF Justifications for CIP-014-4, Requirement R3	
Proposed VRF	**High**
Blackout Report	
FERC VRF G2 Discussion Guideline 2- Consistency within a Reliability Standard	The VRF for Requirement R3 is consistent with those connections between the sub-Requirement VRF assignments and the main Requirement VRF assignment.
FERC VRF G3 Discussion Guideline 3- Consistency among Reliability Standards	This VRF is consistent with other VRFs that address similar reliability goals in different Reliability Standards.
FERC VRF G4 Discussion Guideline 4- Consistency with NERC Definitions of VRFs	This VRF is consistent with the definition of a High VRF requirement per the criteria filed with FERC as part of the ERO's Sanctions Guidelines.
FERC VRF G5 Discussion Guideline 5- Treatment of Requirements that Co-mingle More than One Obligation	This requirement does mingle a higher risk reliability objective and risk reliability objective. Therefore, the VRF reflects the risk of the whole requirement.

VSLs for CIP-014-4, Requirement R3			
Lower	**Moderate**	**High**	**Severe**
N/A	The Transmission Owner has a risk assessment methodology that failed to include one of the requirements listed in Parts 3.1 through 3.3.	The Transmission Owner has a risk assessment methodology that failed to include two of the requirements listed in Parts 3.1 through 3.3.	The Transmission Owner has a risk assessment methodology that failed to include all three of the requirements listed in Parts 3.1 through 3.3. OR The Transmission Owner does not

			have a risk assessment methodology.

VSL Justifications for CIP-014-4, Requirement R3	
FERC VSL G1 Violation Severity Level Assignments Should Not Have the Unintended Consequence of Lowering the Current Level of Compliance	The proposed VSLs do not have the unintended consequence of lowering the level of compliance.
FERC VSL G2 Violation Severity Level Assignments Should Ensure Uniformity and Consistency in the Determination of Penalties Guideline 2a: The Single Violation Severity Level Assignment Category for "Binary" Requirements Is Not Consistent Guideline 2b: Violation Severity Level Assignments that Contain Ambiguous Language	The proposed VSLs are not binary and do not use any ambiguous terminology, thereby supporting uniformity and consistency in the determination of similar penalties for similar violations.
FERC VSL G3 Violation Severity Level Assignment Should Be Consistent with the Corresponding Requirement	The proposed VSLs use the same terminology as used in the associated requirement and are, therefore, consistent with the requirement.
FERC VSL G4 Violation Severity Level Assignment Should Be Based on A Single	Each VSL is based on a single violation and not cumulative violations.

VSL Justifications for CIP-014-4, Requirement R3	
Violation, Not on A Cumulative Number of Violations	

VRF Justifications for CIP-014-4, Requirement R4	
Proposed VRF	**Medium**
NERC VRF Discussion	A VRF of Medium is appropriate because, if violated, it could directly affect the electrical state or the capability of the BES, or the ability to effectively monitor and control the BES; however, a violation is unlikely to lead to BES instability, separation, or cascading failures.
FERC VRF G1 Discussion Guideline 1- Consistency with Blackout Report	This VRF is consistent with the identified areas from the FERC list of critical areas in the Final Blackout Report.
FERC VRF G2 Discussion Guideline 2- Consistency within a Reliability Standard	The VRF for Requirement R4 is consistent with those connections between the sub-Requirement VRF assignments and the main Requirement VRF assignment.
FERC VRF G3 Discussion Guideline 3- Consistency among Reliability Standards	This VRF is consistent with other VRFs that address similar reliability goals in different Reliability Standards.
FERC VRF G4 Discussion Guideline 4- Consistency with NERC Definitions of VRFs	This VRF is consistent with the definition of a Medium VRF requirement per the criteria filed with FERC as part of the ERO's Sanctions Guidelines.
FERC VRF G5 Discussion Guideline 5- Treatment of Requirements that Co-mingle More	This requirement does not mingle a higher risk reliability objective and a lesser risk reliability objective. Therefore, the VRF reflects the risk of the whole requirement.

VRF Justifications for CIP-014-4, Requirement R4	
Proposed VRF	**Medium**
than One Obligation	

VSLs for CIP-014-4, Requirement R4			
Lower	**Moderate**	**High**	**Severe**
The Transmission Owner with applicable Transmission station(s) and Transmission substation(s) identified in Requirement R1 owned by multiple Transmission Owners failed to coordinate with each appropriate Transmission Owner(s) to determine and document their individual and joint responsibilities for documenting a risk assessment methodology under Requirement R3 and for performing any required risk assessments per Requirement R5 for less than or equal to 25% of jointly owned applicable Transmission station(s) and Transmission substation(s).	The Transmission Owner with applicable Transmission station(s) and Transmission substation(s) identified in Requirement R1 owned by multiple Transmission Owners failed to coordinate with each appropriate Transmission Owner(s) to determine and document their individual and joint responsibilities for documenting a risk assessment methodology under Requirement R3 and for performing any required risk assessments per Requirement R5 for more than 25% and less than or equal to 50% of jointly owned applicable Transmission station(s) and Transmission substation(s).	The Transmission Owner with applicable Transmission station(s) and Transmission substation(s) identified in Requirement owned by multiple Transmission Owners failed to coordinate with each appropriate Transmission Owner(s) to determine and document their individual and joint responsibilities for documenting a risk assessment methodology under Requirement R3 and for performing any required risk assessments per Requirement R5 for more than 50% and less than or equal to 75% of jointly owned applicable Transmission station(s) and Transmission substation(s).	The Transmission Owner with applicable Transmission station(s) and Transmission substation(s) identified in Requirement R1 owned by multiple Transmission Owners failed to coordinate with each appropriate Transmission Owner(s) to determine and document their individual and joint responsibilities for documenting a risk assessment methodology under Requirement R3 and for performing any required risk assessments per Requirement R5 for more than 75% and less than or equal to 100% of any evidence for jointly owned applicable Transmission station(s) and Transmission substation(s).

VSL Justifications for CIP-014-4, Requirement R4	
FERC VSL G1 Violation Severity Level Assignments Should Not Have the Unintended Consequence of Lowering the Current Level of Compliance	The proposed VSLs do not have the unintended consequence of lowering the level of compliance.
FERC VSL G2 Violation Severity Level Assignments Should Ensure Uniformity and Consistency in the Determination of Penalties Guideline 2a: The Single Violation Severity Level Assignment Category for "Binary" Requirements Is Not Consistent Guideline 2b: Violation Severity Level Assignments that Contain Ambiguous Language	The proposed VSLs are not binary and do not use any ambiguous terminology, thereby supporting uniformity and consistency in the determination of similar penalties for similar violations.
FERC VSL G3 Violation Severity Level Assignment Should Be Consistent with the Corresponding Requirement	The proposed VSLs use the same terminology as used in the associated requirement and are, therefore, consistent with the requirement.
FERC VSL G4 Violation Severity Level Assignment Should Be Based on A Single Violation, Not on A Cumulative Number of Violations	Each VSL is based on a single violation and not cumulative violations.

VRF Justifications for CIP-014-4, Requirement R5	
Proposed VRF	**High**
NERC VRF Discussion	The VRF for this new Requirement R5 remains High because it is one of the two sub-Requirements of Requirement R1 from the previously FERC approved CIP-014-3 Reliability Standard.
FERC VRF G1 Discussion Guideline 1- Consistency with Blackout Report	This VRF is consistent with the identified areas from the FERC list of critical areas in the Final Blackout Report.
FERC VRF G2 Discussion Guideline 2- Consistency within a Reliability Standard	The VRF for Requirement R5 is consistent with those connections between the sub-Requirement VRF assignments and the main Requirement VRF assignment.
FERC VRF G3 Discussion Guideline 3- Consistency among Reliability Standards	This VRF is consistent with other VRFs that address similar reliability goals in different Reliability Standards.
FERC VRF G4 Discussion Guideline 4- Consistency with NERC Definitions of VRFs	This VRF is consistent with the definition of a High VRF requirement per the criteria filed with FERC as part of the ERO's Sanctions Guidelines.
FERC VRF G5 Discussion Guideline 5- Treatment of Requirements that Co-mingle More than One Obligation	This requirement does mingle a higher risk reliability objective and risk reliability objective. Therefore, the VRF reflects the risk of the whole requirement.

VSLs for CIP-014-4, Requirement R5			
Lower	**Moderate**	**High**	**Severe**
The Transmission Owner performed a risk assessment, but did so after 36 calendar months, but less than or equal to 38 calendar months.	The Transmission Owner performed a risk assessment, but did so after 38 calendar months, but less than or equal to 40 calendar months. OR The Transmission Owner performed a risk assessment inconsistent with one of the methodology requirements listed in Requirement R3, Parts 3.1 through 3.3.	The Transmission Owner performed a risk assessment, but did so after 40 calendar months, but less than or equal to 42 calendar months. OR The Transmission Owner performed a risk assessment inconsistent with two of the methodology requirements listed in Requirement R3, Parts 3.1 through 3.3. OR The Transmission Owner performed a risk assessment, but failed to include the primary control center identified in Part 5.2.	The Transmission Owner performed a risk assessment, but did so after more than 42 calendar months. OR The Transmission Owner performed a risk assessment inconsistent with all three of the methodology requirements listed in Requirement R3, Parts 3.1 through 3.3.

VSL Justifications for CIP-014-4, Requirement R5	
FERC VSL G1 Violation Severity Level Assignments Should Not Have the Unintended Consequence of Lowering the Current Level of Compliance	The proposed VSLs do not have the unintended consequence of lowering the level of compliance.
FERC VSL G2 Violation Severity Level Assignments	The proposed VSLs are not binary and do not use any ambiguous terminology, thereby supporting uniformity and consistency in the determination of similar penalties for similar violations.

VSL Justifications for CIP-014-4, Requirement R5	
Should Ensure Uniformity and Consistency in the Determination of Penalties Guideline 2a: The Single Violation Severity Level Assignment Category for "Binary" Requirements Is Not Consistent Guideline 2b: Violation Severity Level Assignments that Contain Ambiguous Language	
FERC VSL G3 Violation Severity Level Assignment Should Be Consistent with the Corresponding Requirement	The proposed VSLs use the same terminology as used in the associated requirement and are, therefore, consistent with the requirement.
FERC VSL G4 Violation Severity Level Assignment Should Be Based on A Single Violation, Not on A Cumulative Number of Violations	Each VSL is based on a single violation and not cumulative violations.

VRF Justification for CIP-014-4, Requirement R6

This Requirement is the same as Requirement R2 in CIP-014-3. The VRF did not change from the previously FERC approved CIP-014-3 Reliability Standard.

VSL Justification for CIP-014-4, Requirement R6

The Requirement is the same as Requirement R2 in the previously FERC approved CIP-014-3 Reliability Standard. The VSL did not have material changes except for the reference Requirement numbers because 5 (five) new Requirements were added.

VRF Justification for CIP-014-4, Requirement R7

This Requirement is the same as Requirement R3 in CIP-014-3. The VRF did not change from the previously FERC approved CIP-014-3 Reliability Standard.

VSL Justification for CIP-014-4, Requirement R7

The Requirement is the same as Requirement R3 in the previously FERC approved CIP-014-3 Reliability Standard. The VSL did not have material changes except for the reference Requirement numbers because 5 (five) new Requirements were added.

VRF Justification for CIP-014-4, Requirement R8

This Requirement is the same as Requirement R4 in CIP-014-3. The VRF did not change from the previously FERC approved CIP-014-3 Reliability Standard.

VSL Justification for CIP-014-4, Requirement R8

The Requirement is the same as Requirement R4 in CIP-014-3. The VSL did not have material changes from the previously FERC approved CIP-014-3 Reliability Standard except changed “Responsible Entity” to “responsible entity” and the reference Requirement numbers because 5 (five) new Requirements were added.

VRF Justification for CIP-014-4, Requirement R9

This Requirement is the same as Requirement R5 in CIP-014-3. The VRF did not change from the previously FERC approved CIP-014-3 Reliability Standard.

VSL Justification for CIP-014-4, Requirement R9

The Requirement is the same as Requirement R5 in CIP-014-3. The VSL did not have material change from the previously FERC approved CIP-014-3 Reliability Standard except changed “Responsible Entity” to “responsible entity” and the reference Requirement numbers because 5 (five) new Requirements were added.

VRF Justification for CIP-014-4, Requirement R10

This Requirement is the same as Requirement R6 in CIP-014-3. The VRF did not change from the previously FERC approved CIP-014-3 Reliability Standard.

VSL Justification for CIP-014-4, Requirement R10

VSLs for CIP-014-4, Requirement R10			
Lower	**Moderate**	**High**	**Severe**
The responsible entity had an unaffiliated third party review the evaluation performed under Requirement R8 and the security plan(s) developed under Requirement R9, but did so in more than 90 calendar days, but less than or equal to 100 calendar days. OR The responsible entity had an unaffiliated third party review the evaluation performed under Requirement R8 and the security plan(s) developed under Requirement R9 and modified or documented the reason for not modifying the security plan(s) as specified in Part 10.3, but did so more than 70 calendar days and less than or equal to 80 calendar days following completion of the third party review.	The responsible entity had an unaffiliated third party review the evaluation performed under Requirement R8 and the security plan(s) developed under Requirement R9, but did so in more than 100 calendar days, but less than or equal to 110 calendar days. OR The responsible entity had an unaffiliated third party review the evaluation performed under Requirement R8 and the security plan(s) developed under Requirement R9 and modified or documented the reason for not modifying the security plan(s) as specified in Part 10.3, but did so more than 80 calendar days following completion of the third party review. OR The responsible entity had an unaffiliated third party review the evaluation performed under Requirement R8 and the security plan(s) developed under Requirement R9, but did not document the reason for not	The responsible entity had an unaffiliated third party review the evaluation performed under Requirement R8 and the security plan(s) developed under Requirement R9, but did so more than 110 calendar days, but less than or equal to 120 calendar days. OR The responsible entity failed to have an unaffiliated third party review the evaluation performed under Requirement R8 and the security plan(s) developed under Requirement R9. OR The responsible entity had an unaffiliated third party review the evaluation performed under Requirement R8 and the security plan(s) developed under Requirement R9, but failed to implement procedures for protecting information per Part 10.4.	The responsible entity failed to have an unaffiliated third party review the evaluation performed under Requirement R8 and the security plan(s) developed under Requirement R9 in more than 120 calendar days.

	modifying the security plan(s) as specified in Part 10.3.		

VSL Justifications for CIP-014-4, Requirement R10	
FERC VSL G1 Violation Severity Level Assignments Should Not Have the Unintended Consequence of Lowering the Current Level of Compliance	This is an existing Requirement. The drafting team revised the VSL language for consistency with the proposed revisions to the standard. All of the violation severity levels stayed the same from the previously FERC-approved version
FERC VSL G2 Violation Severity Level Assignments Should Ensure Uniformity and Consistency in the Determination of Penalties Guideline 2a: The Single Violation Severity Level Assignment Category for "Binary" Requirements Is Not Consistent Guideline 2b: Violation Severity Level Assignments that Contain Ambiguous Language	The proposed VSLs are not binary and do not use any ambiguous terminology, thereby supporting uniformity and consistency in the determination of similar penalties for similar violations.
FERC VSL G3 Violation Severity Level Assignment Should Be Consistent with the Corresponding Requirement	The proposed VSLs use the same terminology as used in the associated requirement and are, therefore, consistent with the requirement.
FERC VSL G4 Violation Severity Level Assignment Should Be Based on A Single Violation, Not on A Cumulative	Each VSL is based on a single violation and not cumulative violations.

Number of Violations	

NERC
NORTH AMERICAN ELECTRIC RELIABILITY CORPORATION

Violation Risk Factor and Violation Severity Level Justifications

Project 2023-06 CIP-014 Risk Assessment Refinement (CIP-014-4)

This document provides the drafting team's (DT's) justification for assignment of violation risk factors (VRFs) and violation severity levels (VSLs) for each requirement in CIP-014-4 Physical Security. Each requirement is assigned a VRF and a VSL. These elements support the determination of an initial value range for the Base Penalty Amount regarding violations of requirements in FERC-approved Reliability Standards, as defined in the Electric Reliability Organizations (ERO) Sanction Guidelines. The SDT applied the following NERC criteria and FERC Guidelines when developing the VRFs and VSLs for the requirements.

NERC Criteria for Violation Risk Factors

High Risk Requirement
A requirement that, if violated, could directly cause or contribute to Bulk Electric System instability, separation, or a cascading sequence of failures, or could place the Bulk Electric System at an unacceptable risk of instability, separation, or cascading failures; or, a requirement in a planning time frame that, if violated, could, under emergency, abnormal, or restorative conditions anticipated by the preparations, directly cause or contribute to Bulk Electric System instability, separation, or a cascading sequence of failures, or could place the Bulk Electric System at an unacceptable risk of instability, separation, or cascading failures, or could hinder restoration to a normal condition.

Medium Risk Requirement
A requirement that, if violated, could directly affect the electrical state or the capability of the Bulk Electric System, or the ability to effectively monitor and control the Bulk Electric System. However, violation of a medium risk requirement is unlikely to lead to Bulk Electric System instability, separation, or cascading failures; or, a requirement in a planning time frame that, if violated, could, under emergency, abnormal, or restorative conditions anticipated by the preparations, directly and adversely affect the electrical state or capability of the Bulk Electric System, or the ability to effectively monitor, control, or restore the Bulk Electric System. However, violation of a medium risk requirement is unlikely, under emergency, abnormal, or restoration conditions anticipated by the preparations, to lead to Bulk Electric System instability, separation, or cascading failures, nor to hinder restoration to a normal condition.

Lower Risk Requirement
A requirement that is administrative in nature and a requirement that, if violated, would not be expected to adversely affect the electrical state or capability of the Bulk Electric System, or the ability to effectively monitor and control the Bulk Electric System; or, a requirement that is administrative in nature and a requirement in a planning time frame that, if violated, would not, under the emergency, abnormal, or restorative conditions anticipated by the preparations, be expected to adversely affect the electrical state or capability of the Bulk Electric System, or the ability to effectively monitor, control, or restore the Bulk Electric System.

FERC Guidelines for Violation Risk Factors

Guideline (1) – Consistency with the Conclusions of the Final Blackout Report

FERC seeks to ensure that VRFs assigned to Requirements of Reliability Standards in these identified areas appropriately reflect their historical critical impact on the reliability of the Bulk-Power System. In the VSL Order, FERC listed critical areas (from the Final Blackout Report) where violations could severely affect the reliability of the Bulk-Power System:

- Emergency operations
- Vegetation management
- Operator personnel training
- Protection systems and their coordination
- Operating tools and backup facilities
- Reactive power and voltage control
- System modeling and data exchange
- Communication protocol and facilities
- Requirements to determine equipment ratings
- Synchronized data recorders
- Clearer criteria for operationally critical facilities
- Appropriate use of transmission loading relief.

Guideline (2) – Consistency within a Reliability Standard
FERC expects a rational connection between the sub-Requirement VRF assignments and the main Requirement VRF assignment.

Guideline (3) – Consistency among Reliability Standards
FERC expects the assignment of VRFs corresponding to Requirements that address similar reliability goals in different Reliability Standards would be treated comparably.

Guideline (4) – Consistency with NERC's Definition of the Violation Risk Factor Level
Guideline (4) was developed to evaluate whether the assignment of a particular VRF level conforms to NERC's definition of that risk level.

Guideline (5) – Treatment of Requirements that Co-mingle More Than One Obligation
Where a single Requirement co-mingles a higher risk reliability objective and a lesser risk reliability objective, the VRF assignment for such Requirements must not be watered down to reflect the lower risk level associated with the less important objective of the Reliability Standard.

NERC Criteria for Violation Severity Levels

VSLs define the degree to which compliance with a requirement was not achieved. Each requirement must have at least one VSL. While it is preferable to have four VSLs for each requirement, some requirements do not have multiple "degrees" of noncompliant performance and may have only one, two, or three VSLs.

VSLs should be based on NERC's overarching criteria shown in the table below:

Lower VSL	Moderate VSL	High VSL	Severe VSL
The performance or product measured almost meets the full intent of the requirement.	The performance or product measured meets the majority of the intent of the requirement.	The performance or product measured does not meet the majority of the intent of the requirement, but does meet some of the intent.	The performance or product measured does not substantively meet the intent of the requirement.

FERC Order of Violation Severity Levels

The FERC VSL guidelines are presented below, followed by an analysis of whether the VSLs proposed for each requirement in the standard meet the FERC Guidelines for assessing VSLs:

Guideline (1) – Violation Severity Level Assignments Should Not Have the Unintended Consequence of Lowering the Current Level of Compliance

Compare the VSLs to any prior levels of non-compliance and avoid significant changes that may encourage a lower level of compliance than was required when levels of non-compliance were used.

Guideline (2) – Violation Severity Level Assignments Should Ensure Uniformity and Consistency in the Determination of Penalties

A violation of a "binary" type requirement must be a "Severe" VSL.
Do not use ambiguous terms such as "minor" and "significant" to describe noncompliant performance.

Guideline (3) – Violation Severity Level Assignment Should Be Consistent with the Corresponding Requirement

VSLs should not expand on what is required in the requirement.

Guideline (4) – Violation Severity Level Assignment Should Be Based on a Single Violation, Not on a Cumulative Number of Violations

Unless otherwise stated in the requirement, each instance of non-compliance with a requirement is a separate violation. Section 4 of the Sanction Guidelines states that assessing penalties on a per violation per day basis is the "default" for penalty calculations.

VRF Justifications for CIP-014-4, Requirement R1	
Proposed VRF	**High**
NERC VRF Discussion	A VRF of higher is appropriate because the requirement, if violated, could directly cause or contribute to Bulk Electric System instability, separation, or a cascading sequence of failures, or could place the Bulk Electric System at an unacceptable risk of instability, separation, or cascading failures. The VRF is revised and unchanged from the last FERC approved version.
FERC VRF G1 Discussion Guideline 1- Consistency with Blackout Report	This VRF is consistent with the identified areas from the FERC list of critical areas in the Final Blackout Report.
FERC VRF G2 Discussion Guideline 2- Consistency within a Reliability Standard	The VRF for Requirement R1 is consistent with those connections between the sub-Requirement VRF assignments and the main Requirement VRF assignment.
FERC VRF G3 Discussion Guideline 3- Consistency among Reliability Standards	This VRF is consistent with other VRFs that address similar reliability goals in different Reliability Standards.
FERC VRF G4 Discussion Guideline 4- Consistency with NERC Definitions of VRFs	This VRF is consistent with the definition of a High VRF requirement per the criteria filed with FERC as part of the ERO's Sanctions Guidelines.
FERC VRF G5 Discussion Guideline 5- Treatment of Requirements that Co-mingle More	This requirement does not mingle a higher risk reliability objective and a lesser risk reliability objective. Therefore, the VRF reflects the risk of the whole requirement.

VRF Justifications for CIP-014-4, Requirement R1	
Proposed VRF	**High**
than One Obligation	

VSLs for CIP-014-4, Requirement R1			
Lower	**Moderate**	**High**	**Severe**
The Transmission Owner identified each applicable Transmission station(s) ~~or~~ and Transmission substation(s) per Attachment 1, but did so after 36 calendar months, but less than or equal to 38 calendar months. OR The Transmission Owner identified each applicable Transmission station(s) ~~or~~ and Transmission substation(s), but failed to identify less than or equal to 10% of the applicable Transmission station(s) ~~or~~ and Transmission substation(s) per Attachment 1.	The Transmission Owner identified each applicable Transmission station(s) ~~or~~ and Transmission substation(s) per Attachment 1, but did so after 38 calendar months, but less than or equal to 40 calendar months. OR The Transmission Owner identified each applicable Transmission station(s) ~~or~~ and Transmission substation(s), but failed to identify more than 10% and less than or equal to 20% of the applicable Transmission station(s) ~~or~~ and Transmission substation(s) per Attachment 1.	The Transmission Owner identified each applicable Transmission station(s) ~~or~~ and Transmission substation(s) per Attachment 1, but did so after 40 calendar months, but less than or equal to 42 calendar months. OR The Transmission Owner identified each applicable Transmission station(s) ~~or~~ and Transmission substation(s), but failed to identify more than 20% and less than or equal to 30% of the applicable Transmission station(s) ~~or~~ and Transmission substation(s) per Attachment 1.	The Transmission Owner failed to identify each applicable Transmission station(s) ~~or~~ and Transmission substation(s) per Attachment 1. OR The Transmission Owner identified each applicable Transmission station(s) ~~or~~ and Transmission substation(s) per Attachment 1, but did so after more than 42 calendar months. OR The Transmission Owner identified each applicable Transmission station(s) ~~or~~ and Transmission substation(s), but failed to identify more than 30% of the applicable Transmission station(s) ~~or~~ and Transmission substation(s) per Attachment 1.

VSL Justifications for CIP-014-4, Requirement R1	
FERC VSL G1 Violation Severity Level Assignments Should Not Have the Unintended Consequence of Lowering the Current Level of Compliance	The proposed VSLs do not have the unintended consequence of lowering the level of compliance.
FERC VSL G2 Violation Severity Level Assignments Should Ensure Uniformity and Consistency in the Determination of Penalties Guideline 2a: The Single Violation Severity Level Assignment Category for "Binary" Requirements Is Not Consistent Guideline 2b: Violation Severity Level Assignments that Contain Ambiguous Language	The proposed VSLs are not binary and do not use any ambiguous terminology, thereby supporting uniformity and consistency in the determination of similar penalties for similar violations.
FERC VSL G3 Violation Severity Level Assignment Should Be Consistent with the Corresponding Requirement	The proposed VSLs use the same terminology as used in the associated requirement and are, therefore, consistent with the requirement.
FERC VSL G4 Violation Severity Level Assignment Should Be Based on A Single Violation, Not on A Cumulative Number of Violations	Each VSL is based on a single violation and not cumulative violations.

VRF Justifications for CIP-014-4, Requirement R2	
Proposed VRF	**Medium**
NERC VRF Discussion	A VRF of Medium is appropriate because, if violated, it could directly affect the electrical state or the capability of the Bulk Electric System, or the ability to effectively monitor and control the Bulk Electric System; however, a violation is unlikely to lead to Bulk Electric System instability, separation, or cascading failures.
FERC VRF G1 Discussion Guideline 1- Consistency with Blackout Report	This VRF is consistent with the identified areas from the FERC list of critical areas in the Final Blackout Report.
FERC VRF G2 Discussion Guideline 2- Consistency within a Reliability Standard	The VRF for Requirement R2 is consistent with those connections between the sub-Requirement VRF assignments and the main Requirement VRF assignment.
FERC VRF G3 Discussion Guideline 3- Consistency among Reliability Standards	This VRF is consistent with other VRFs that address similar reliability goals in different Reliability Standards.
FERC VRF G4 Discussion Guideline 4- Consistency with NERC Definitions of VRFs	This VRF is consistent with the definition of a Medium VRF requirement per the criteria filed with FERC as part of the ERO's Sanctions Guidelines.
FERC VRF G5 Discussion Guideline 5- Treatment of Requirements that Co-mingle More than One Obligation	This requirement does not mingle a higher risk reliability objective and a lesser risk reliability objective. Therefore, the VRF reflects the risk of the whole requirement.

VSLs for CIP-014-4, Requirement R2			
Lower	**Moderate**	**High**	**Severe**
N/A	N/A	N/A	The Transmission Owner with applicable Transmission station(s) or Transmission substation(s) identified in Requirement R1 did not identify ~~proximate~~existing Bulk Electric System Transmission station(s) and Bulk Electric System Transmission substation(s), irrespective of ownership, within 1500 feet or 457 meters (the shortest distance, measured substation fence line to substation fence line) of an applicable Transmission station or Transmission substation identified in Requirement R1.

VSL Justifications for CIP-014-4, Requirement R2	
FERC VSL G1 Violation Severity Level Assignments Should Not Have the Unintended Consequence of Lowering the Current Level of Compliance	This is a new Requirement and does not have the unintended consequence of lowering the current level of compliance.
FERC VSL G2 Violation Severity Level Assignments Should Ensure Uniformity and Consistency in the Determination of Penalties	The proposed VSLs are binary and do not use any ambiguous terminology, thereby supporting uniformity and consistency in the determination of similar penalties for similar violations. The new Requirement R2 is a binary requirement and thus only assigned a Severe VSL because the Transmission Owners either have or have not identified proximate Transmission station(s) and Transmission substation(s), irrespective of ownership, within 1500 feet or 457 meters (the shortest distance, measured substation fence line to substation fence line) of an applicable Transmission station or Transmission substation identified in Requirement R1.

VSL Justifications for CIP-014-4, Requirement R2	
Guideline 2a: The Single Violation Severity Level Assignment Category for "Binary" Requirements Is Not Consistent Guideline 2b: Violation Severity Level Assignments that Contain Ambiguous Language	
FERC VSL G3 Violation Severity Level Assignment Should Be Consistent with the Corresponding Requirement	The proposed VSLs use the same terminology as used in the associated requirement and are, therefore, consistent with the requirement.
FERC VSL G4 Violation Severity Level Assignment Should Be Based on A Single Violation, Not on A Cumulative Number of Violations	Each VSL is based on a single violation and not cumulative violations.

VRF Justifications for CIP-014-4, Requirement R3	
Proposed VRF	**High**
NERC VRF Discussion	A VRF of higher is appropriate because the requirement, if violated, could directly cause or contribute to Bulk Electric System instability, separation, or a cascading sequence of failures, or could place the Bulk Electric System at an unacceptable risk of instability, separation, or cascading failures.
FERC VRF G1 Discussion Guideline 1- Consistency with	This VRF is consistent with the identified areas from the FERC list of critical areas in the Final Blackout Report.

VRF Justifications for CIP-014-4, Requirement R3	
Proposed VRF	**High**
Blackout Report	
FERC VRF G2 Discussion Guideline 2- Consistency within a Reliability Standard	The VRF for Requirement R3 is consistent with those connections between the sub-Requirement VRF assignments and the main Requirement VRF assignment.
FERC VRF G3 Discussion Guideline 3- Consistency among Reliability Standards	This VRF is consistent with other VRFs that address similar reliability goals in different Reliability Standards.
FERC VRF G4 Discussion Guideline 4- Consistency with NERC Definitions of VRFs	This VRF is consistent with the definition of a High VRF requirement per the criteria filed with FERC as part of the ERO's Sanctions Guidelines.
FERC VRF G5 Discussion Guideline 5- Treatment of Requirements that Co-mingle More than One Obligation	This requirement does mingle a higher risk reliability objective and risk reliability objective. Therefore, the VRF reflects the risk of the whole requirement.

VSLs for CIP-014-4, Requirement R3			
Lower	**Moderate**	**High**	**Severe**
~~The Transmission Owner has a risk assessment methodology that failed to include one of the requirements listed in Parts 3.1 through 3.4.~~N/A	The Transmission Owner has a risk assessment methodology that failed to include ~~two~~one of the requirements listed in Parts 3.1 through ~~3.4~~3.3.	The Transmission Owner has a risk assessment methodology that failed to include ~~three~~two of the requirements listed in Parts 3.1 through ~~3.4~~3.3.	The Transmission Owner has a risk assessment methodology that failed to include ~~four~~all three of the requirements listed in Parts 3.1 through ~~3.4~~3.3. OR The Transmission Owner does not

			have a risk assessment methodology.

VSL Justifications for CIP-014-4, Requirement R3	
FERC VSL G1 Violation Severity Level Assignments Should Not Have the Unintended Consequence of Lowering the Current Level of Compliance	The proposed VSLs do not have the unintended consequence of lowering the level of compliance.
FERC VSL G2 Violation Severity Level Assignments Should Ensure Uniformity and Consistency in the Determination of Penalties Guideline 2a: The Single Violation Severity Level Assignment Category for "Binary" Requirements Is Not Consistent Guideline 2b: Violation Severity Level Assignments that Contain Ambiguous Language	The proposed VSLs are not binary and do not use any ambiguous terminology, thereby supporting uniformity and consistency in the determination of similar penalties for similar violations.
FERC VSL G3 Violation Severity Level Assignment Should Be Consistent with the Corresponding Requirement	The proposed VSLs use the same terminology as used in the associated requirement and are, therefore, consistent with the requirement.
FERC VSL G4 Violation Severity Level Assignment Should Be Based on A Single	Each VSL is based on a single violation and not cumulative violations.

VSL Justifications for CIP-014-4, Requirement R3	
Violation, Not on A Cumulative Number of Violations	

VRF Justifications for CIP-014-4, Requirement R4	
Proposed VRF	**Medium**
NERC VRF Discussion	A VRF of Medium is appropriate because, if violated, it could directly affect the electrical state or the capability of the Bulk Electric System, or the ability to effectively monitor and control the Bulk Electric System; however, a violation is unlikely to lead to Bulk Electric System instability, separation, or cascading failures.
FERC VRF G1 Discussion Guideline 1- Consistency with Blackout Report	This VRF is consistent with the identified areas from the FERC list of critical areas in the Final Blackout Report.
FERC VRF G2 Discussion Guideline 2- Consistency within a Reliability Standard	The VRF for Requirement R4 is consistent with those connections between the sub-Requirement VRF assignments and the main Requirement VRF assignment.
FERC VRF G3 Discussion Guideline 3- Consistency among Reliability Standards	This VRF is consistent with other VRFs that address similar reliability goals in different Reliability Standards.
FERC VRF G4 Discussion Guideline 4- Consistency with NERC Definitions of VRFs	This VRF is consistent with the definition of a Medium VRF requirement per the criteria filed with FERC as part of the ERO's Sanctions Guidelines.
FERC VRF G5 Discussion Guideline 5- Treatment of Requirements that Co-mingle More	This requirement does not mingle a higher risk reliability objective and a lesser risk reliability objective. Therefore, the VRF reflects the risk of the whole requirement.

VRF Justifications for CIP-014-4, Requirement R4	
Proposed VRF	**Medium**
than One Obligation	

VSLs for CIP-014-4, Requirement R4			
Lower	**Moderate**	**High**	**Severe**
The Transmission Owner with applicable Transmission station(s) and Transmission substation(s) identified in Requirement R1 ~~containing Bulk Electric System (BES) Elements~~ owned by multiple Transmission Owners failed to coordinate with each appropriate Transmission Owner(s) to determine and document their individual and joint responsibilities for documenting a risk assessment methodology under Requirement R3 and for performing any required risk assessments per Requirement R5 for less than or equal to 25% of jointly owned applicable Transmission station(s) and Transmission substation(s).	The Transmission Owner with applicable Transmission station(s) and Transmission substation(s) identified in Requirement R1 ~~containing Bulk Electric System (BES) Elements~~ owned by multiple Transmission Owners failed to coordinate with each appropriate Transmission Owner(s) to determine and document their individual and joint responsibilities for documenting a risk assessment methodology under Requirement R3 and for performing any required risk assessments per Requirement R5 for more than 25% and less than or equal to 50% of jointly owned applicable Transmission station(s) and Transmission substation(s).	The Transmission Owner with applicable Transmission station(s) and Transmission substation(s) identified in Requirement ~~R1 containing Bulk Electric System (BES) Elements~~ owned by multiple Transmission Owners failed to coordinate with each appropriate Transmission Owner(s) to determine and document their individual and joint responsibilities for documenting a risk assessment methodology under Requirement R3 and for performing any required risk assessments per Requirement R5 for more than 50% and less than or equal to 75% of jointly owned applicable Transmission station(s) and Transmission substation(s).	The Transmission Owner with applicable Transmission station(s) and Transmission substation(s) identified in Requirement R1 ~~containing Bulk Electric System (BES) Elements~~ owned by multiple Transmission Owners failed to ~~i~~ coordinate with each appropriate Transmission Owner(s) to determine and document their individual and joint responsibilities for documenting a risk assessment methodology under Requirement R3 and for performing any required risk assessments per Requirement R5 for more than 75% and less than or equal to 100% of any evidence for ~~of~~ jointly owned applicable Transmission station(s) and Transmission substation(s).

VSL Justifications for CIP-014-4, Requirement R4	
FERC VSL G1 Violation Severity Level Assignments Should Not Have the Unintended Consequence of Lowering the Current Level of Compliance	The proposed VSLs do not have the unintended consequence of lowering the level of compliance.
FERC VSL G2 Violation Severity Level Assignments Should Ensure Uniformity and Consistency in the Determination of Penalties Guideline 2a: The Single Violation Severity Level Assignment Category for "Binary" Requirements Is Not Consistent Guideline 2b: Violation Severity Level Assignments that Contain Ambiguous Language	The proposed VSLs are not binary and do not use any ambiguous terminology, thereby supporting uniformity and consistency in the determination of similar penalties for similar violations.
FERC VSL G3 Violation Severity Level Assignment Should Be Consistent with the Corresponding Requirement	The proposed VSLs use the same terminology as used in the associated requirement and are, therefore, consistent with the requirement.
FERC VSL G4 Violation Severity Level Assignment Should Be Based on A Single Violation, Not on A Cumulative Number of Violations	Each VSL is based on a single violation and not cumulative violations.

VRF Justifications for CIP-014-4, Requirement R5	
Proposed VRF	**High**
NERC VRF Discussion	The VRF for this new Requirement R5 remains High because it is one of the two sub-Requirements of Requirement R1 from the previously FERC approved CIP-014-3 Reliability Standard.
FERC VRF G1 Discussion Guideline 1- Consistency with Blackout Report	This VRF is consistent with the identified areas from the FERC list of critical areas in the Final Blackout Report.
FERC VRF G2 Discussion Guideline 2- Consistency within a Reliability Standard	The VRF for Requirement R5 is consistent with those connections between the sub-Requirement VRF assignments and the main Requirement VRF assignment.
FERC VRF G3 Discussion Guideline 3- Consistency among Reliability Standards	This VRF is consistent with other VRFs that address similar reliability goals in different Reliability Standards.
FERC VRF G4 Discussion Guideline 4- Consistency with NERC Definitions of VRFs	This VRF is consistent with the definition of a High VRF requirement per the criteria filed with FERC as part of the ERO's Sanctions Guidelines.
FERC VRF G5 Discussion Guideline 5- Treatment of Requirements that Co-mingle More than One Obligation	This requirement does mingle a higher risk reliability objective and risk reliability objective. Therefore, the VRF reflects the risk of the whole requirement.

VSLs for CIP-014-4, Requirement R5			
Lower	**Moderate**	**High**	**Severe**

The Transmission Owner performed a risk assessment, but did so after 36 calendar months, but less than or equal to 38 calendar months. ~~OR~~ ~~The Transmission Owner performed a risk assessment inconsistent with one of the methodology requirements listed in Requirement R3, Parts 3.1 through 3.4.~~	The Transmission Owner performed a risk assessment, but did so after 38 calendar months, but less than or equal to 40 calendar months. OR The Transmission Owner performed a risk assessment inconsistent with ~~two~~one of the methodology requirements listed in Requirement R3, Parts 3.1 through ~~3.4~~3.3.	The Transmission Owner performed a risk assessment, but did so after 40 calendar months, but less than or equal to 42 calendar months. OR The Transmission Owner performed a risk assessment inconsistent with ~~three~~two of the methodology requirements listed in Requirement R3, Parts 3.1 through ~~3.4~~3.3. OR The Transmission Owner performed a risk assessment but failed to include the primary control center identified in Part 5.2.	The Transmission Owner performed a risk assessment, but did so after more than 42 calendar months. OR The Transmission Owner performed a risk assessment inconsistent with ~~four~~all three of the methodology requirements listed in Requirement R3, Parts 3.1 through ~~3.4~~3.3.

VSL Justifications for CIP-014-4, Requirement R5	
FERC VSL G1 Violation Severity Level Assignments Should Not Have the Unintended Consequence of Lowering the Current Level of Compliance	The proposed VSLs do not have the unintended consequence of lowering the level of compliance.
FERC VSL G2 Violation Severity Level Assignments Should Ensure Uniformity and Consistency in the Determination of Penalties	The proposed VSLs are not binary and do not use any ambiguous terminology, thereby supporting uniformity and consistency in the determination of similar penalties for similar violations.

VSL Justifications for CIP-014-4, Requirement R5	
Guideline 2a: The Single Violation Severity Level Assignment Category for "Binary" Requirements Is Not Consistent Guideline 2b: Violation Severity Level Assignments that Contain Ambiguous Language	
FERC VSL G3 Violation Severity Level Assignment Should Be Consistent with the Corresponding Requirement	The proposed VSLs use the same terminology as used in the associated requirement and are, therefore, consistent with the requirement.
FERC VSL G4 Violation Severity Level Assignment Should Be Based on A Single Violation, Not on A Cumulative Number of Violations	Each VSL is based on a single violation and not cumulative violations.

VRF Justification for CIP-014-4, Requirement R6

This Requirement is the same as Requirement R2 in CIP-014-3. The VRF did not change from the previously FERC approved CIP-014-3 Reliability Standard.

VSL Justification for CIP-014-4, Requirement R6

The Requirement is the same as Requirement R2 in the previously FERC approved CIP-014-3 Reliability Standard. The VSL did not have material changes except for the reference Requirement numbers because 5 (five) new Requirements were added.

VRF Justification for CIP-014-4, Requirement R7

This Requirement is the same as Requirement R3 in CIP-014-3. The VRF did not change from the previously FERC approved CIP-014-3 Reliability Standard.

VSL Justification for CIP-014-4, Requirement R7

The Requirement is the same as Requirement R3 in the previously FERC approved CIP-014-3 Reliability Standard. The VSL did not have material changes except for the reference Requirement numbers because 5 (five) new Requirements were added.

VRF Justification for CIP-014-4, Requirement R8

This Requirement is the same as Requirement R4 in CIP-014-3. The VRF did not change from the previously FERC approved CIP-014-3 Reliability Standard.

VSL Justification for CIP-014-4, Requirement R8

The Requirement is the same as Requirement R4 in CIP-014-3. The VSL did not have material changes from the previously FERC approved CIP-014-3 Reliability Standard except changed "Responsible Entity" to "responsible entity" and the reference Requirement numbers because 5 (five) new Requirements were added.

VRF Justification for CIP-014-4, Requirement R9

This Requirement is the same as Requirement R5 in CIP-014-3. The VRF did not change from the previously FERC approved CIP-014-3 Reliability Standard.

VSL Justification for CIP-014-4, Requirement R9

The Requirement is the same as Requirement R5 in CIP-014-3. The VSL did not have material change from the previously FERC approved CIP-014-3 Reliability Standard except changed "Responsible Entity" to "responsible entity" and the reference Requirement numbers because 5 (five) new Requirements were added.

VRF Justification for CIP-014-4, Requirement R10

This Requirement is the same as Requirement R6 in CIP-014-3. The VRF did not change from the previously FERC approved CIP-014-3 Reliability Standard.

VSL Justification for CIP-014-4, Requirement R10

VSLs for CIP-014-4, Requirement R10			
Lower	**Moderate**	**High**	**Severe**
The responsible entity had an unaffiliated third party review the evaluation performed under Requirement R8 and the security plan(s) developed under Requirement R9, but did so in more	The responsible entity had an unaffiliated third party review the evaluation performed under Requirement R8 and the security plan(s) developed under Requirement R9, but did so in more	The responsible entity had an unaffiliated third party review the evaluation performed under Requirement R8 and the security plan(s) developed under Requirement R9, but did so more	The responsible entity failed to have an unaffiliated third party review the evaluation performed under Requirement R8 and the security plan(s) developed under

than 90 calendar days, but less than or equal to 100 calendar days. OR The responsible entity had an unaffiliated third party review the evaluation performed under Requirement R8 and the security plan(s) developed under Requirement R9 and modified or documented the reason for not modifying the security plan(s) as specified in Part 10.3, but did so more than 70 calendar days and less than or equal to 80 calendar days following completion of the third party review.	than 100 calendar days, but less than or equal to 110 calendar days. OR The responsible entity had an unaffiliated third party review the evaluation performed under Requirement R8 and the security plan(s) developed under Requirement R9 and modified or documented the reason for not modifying the security plan(s) as specified in Part 10.3, but did so more than 80 calendar days following completion of the third party review. OR The responsible entity had an unaffiliated third party review the evaluation performed under Requirement R8 and the security plan(s) developed under Requirement R9, but did not document the reason for not modifying the security plan(s) as specified in Part 10.3.	than 110 calendar days, but less than or equal to 120 calendar days. OR The responsible entity failed to have an unaffiliated third party review the evaluation performed under Requirement R8 and the security plan(s) developed under Requirement R9. OR The responsible entity had an unaffiliated third party review the evaluation performed under Requirement R8 and the security plan(s) developed under Requirement R9, but failed to implement procedures for protecting information per Part 10.4.	Requirement R9 in more than 120 calendar days.

VSL Justifications for CIP-014-4, Requirement R10	
FERC VSL G1 Violation Severity Level Assignments Should Not Have the Unintended Consequence of Lowering the	This is an existing Requirement. The drafting team revised the VSL language for consistency with the proposed revisions to the standard. All of the violation severity levels stayed the same from the previously FERC-approved version

Current Level of Compliance	
FERC VSL G2 Violation Severity Level Assignments Should Ensure Uniformity and Consistency in the Determination of Penalties Guideline 2a: The Single Violation Severity Level Assignment Category for "Binary" Requirements Is Not Consistent Guideline 2b: Violation Severity Level Assignments that Contain Ambiguous Language	The proposed VSLs are not binary and do not use any ambiguous terminology, thereby supporting uniformity and consistency in the determination of similar penalties for similar violations.
FERC VSL G3 Violation Severity Level Assignment Should Be Consistent with the Corresponding Requirement	The proposed VSLs use the same terminology as used in the associated requirement and are, therefore, consistent with the requirement.
FERC VSL G4 Violation Severity Level Assignment Should Be Based on A Single Violation, Not on A Cumulative Number of Violations	Each VSL is based on a single violation and not cumulative violations.

NERC
NORTH AMERICAN ELECTRIC RELIABILITY CORPORATION

Technical Rationale

Project 2023-06 CIP-014 Risk Assessment Refinement
Reliability Standard CIP-014-4 | March 2026

CIP-014-4 – Physical Security

In performing the risk assessment, the Transmission Owner (TO) should first identify their population of Transmission stations and Transmission substations that meet the criteria contained in Attachment 1. The Standard requires the TO to perform a risk assessment, consisting of transmission analyses to determine which of those Transmission stations and Transmission substations, if rendered inoperable or damaged, could result in instability, uncontrolled separation, or Cascading within an Interconnection.

The purpose of Reliability Standard CIP-014 is to protect Transmission stations and Transmission substations, and their associated primary control centers, that if rendered inoperable or damaged, due to a physical attack, could cause instability, uncontrolled separation, or Cascading within an Interconnection. To properly identify candidates for such Transmission station(s) and Transmission substation(s), the TO shall evaluate the criteria listed in Attachment 1.

Rationale for Requirement R1

The Standard Authorization Request (SAR) directed the drafting team (DT) to clarify the in-service window. It also directed the DT to correct any discrepancies between the study period, frequency of study, and the base case(s) a TO uses. In the previous version of CIP-014, the 30-month time frame and the 24-month planned-to-be-in-service date could, if not carefully applied, lead to gaps between models and study horizons. Per the SAR, CIP-014-4 has consolidated these multiple timelines into one.

Requirement R1 is revised to ensure that each TO establishes a list of applicable Transmission station(s) or Transmission substation(s) in accordance with Attachment 1. Aligning the 36 calendar months look ahead in Requirement R1 with the 36 calendar months risk assessment cycle ensures that system topology of the cases used to assess applicability is consistent with the system topology in the risk assessment models.

TOs shall review and, if necessary, update the list of applicable Transmission station(s) or Transmission substation(s) per Attachment 1 at least once every 36 calendar months. The list of applicable Transmission station(s) or Transmission substation(s) shall include existing Facilities and Transmission station(s) and Transmission substation(s) planned to be in service within 36 calendar months. The 36 calendar months risk assessment study cycle aligns with the 36 calendar months planned-to-be-in-service date. "Planned to be in-service" should be taken to mean all Transmission station(s) and Transmission substation(s) as modeled in the base cases for the Near-Term Transmission Planning Horizon.

Rationale for Requirement R2

The distance chosen in requirement R2 is based on guidelines that considered a variety of plausible attack scenarios capable of rendering a substation inoperable.

The DT chose 1,500 feet or 457 meters (the shortest distance, measured substation fence line to substation fence line) in Requirement R2 after review of the Department of Homeland Security (DHS)-Department of Justice (DOJ) Bomb Threat Stand-Off Card. The Bomb Threat Stand-Off Card is a quick reference guide providing recommended evacuation and shelter-in-place distances for various types and sizes of Improvised Explosive Devices (IED), based on version of August, 2025.[1]

The guidance above allowed the DT to draft language that clarified what study scenario(s) and other study assumptions are appropriate and reasonable considering the intent of CIP-014 and the potential range of issues during a physical attack. Simulations should incorporate the loss of station elements without the reliance on local system protection. Clarifying how to account for adjacent Transmission stations or Transmission substations of differing ownership as well as for those Transmission stations or Transmission substations within line-of-sight to each other. These provide limits to what the TO must study and avoid including an explicit representation of the physical event in the standard.

Accurate simulation of the event was deemed a priority of the DT. The DT felt that ownership of proximate substations, as identified in Requirement R2, was irrelevant to Bulk Electric System impact.

The Transmission station(s) or Transmission substation(s) identified in Requirement R2 are only intended for use in the Requirement R5 risk assessment and the Requirement R6 third-party verification to properly account for additional equipment that, if also damaged during an event, could lead to loss of additional Facilities. They are not intended to be subject to Requirements R7 through R10. Requirements R7 through R10 are only relevant for the Transmission substation(s) or Transmission substation(s) identified in Requirement R1.

Rationale for Requirement R3

The new Requirement R3 fulfills the first item in the SAR to "clarify the risk assessment methods" and that the "methods should account for dynamic studies." Requirement R3 also fulfills other items in the SAR around case selection, technically supported rationales, the loss of communications, and local protection within the affected station. The previous Requirement R3 is now Requirement R7 of CIP-014-4.

Per Requirement R3, each TO is required to have a risk assessment methodology, including the criteria by which analytical results will be examined to identify Transmission station(s) or Transmission substation(s) that if rendered inoperable or damaged as a result of a physical attack could result in instability, uncontrolled separation, or Cascading within an Interconnection. The TO is not required to develop its own methodology and is free to use a methodology developed elsewhere, such as in coordination with neighboring TOs or Independent System Operators (ISOs).

Rationale for Requirement R3, Part 3.1

TOs should determine the amount of unacceptable load loss and generation loss within an Interconnection when determining the impact of an event to the Transmission system. The thresholds

[1] https://www.cisa.gov/resources-tools/resources/dhs-doj-bomb-threat-stand-card

identifying unacceptable generation and load losses should be the total of the losses within the TO's footprint and losses external to the TO's footprint. Criteria for measures such as load loss or generation loss should consider the impact to the Interconnection.

While the use of Recommended Interconnection Resource Loss Protection Criteria (RLPC) provides one approach to generation loss—setting these thresholds based on the two largest potential resource losses in an Interconnection as detailed in Attachment A of NERC Reliability Standard BAL-003-2—other methods may also be appropriate, as determined by the TO. The RLPC values should be taken from the latest approved version of NERC's annual 'Frequency Response Annual Analysis' report.

Use of the RLPC recommendations in accordance with the latest version of NERC's 'Frequency Response Annual Analysis' report is an example of technically justified thresholds for unacceptable generation and load loss within an Interconnection. Use of lower values than the RLPC recommendations is also technically justifiable. Use of higher values than the RLPC recommendations would require additional technical justification.

Large loss of generation or load due to the evaluated disturbance could result in severe System impacts. The documented risk assessment methodology shall include the amount of unacceptable load loss and generation loss, that could result in instability, uncontrolled separation, or Cascading within an Interconnection. Conditions and thresholds used for determining critical Transmission station(s) or Transmission substation(s), i.e., those that if rendered inoperable or damaged as a result of a physical attack could result in instability, uncontrolled separation, or Cascading within an Interconnection, should be part of the documented risk assessment methodology.

It is up to the TO to identify post-event measures that can be used to assess the criticality of a Transmission station or Transmission substation. Suggested measures are listed below. A TO can decide that one or more of the items are not applicable to their location within the interconnection and if any additional items should be included.

The following parameters can be used to evaluate the steady-state and/or dynamic analysis:

- Steady state voltages
- Transient voltage response
- Thermal loading of Facilities
- Relay loadability
- Rotor angle stability
- Frequency exceeding generator limits
- Frequency stability
- Acceptable damping of oscillations
- Cascading line tripping

- Steady-state voltage stability

Rationale for Requirement R3, Part 3.2
The performance of both steady state and dynamics simulations is required for all applicable Transmission station(s) and substation(s). Dynamic simulations are required by the standard because exclusively performing steady-state simulations is insufficient for determining whether the loss of a Transmission station or Transmission substation could result in instability, uncontrolled separation, or Cascading within an Interconnection.

Rationale for Requirement R3, Part 3.3
Historically, simulation of a three-phase Fault at applicable Transmission station(s) and Transmission substation(s) appears to be the prevalent assumption used by the majority of TOs in the performance of stability analyses for CIP-014 risk assessments. The DT has determined, however, that there may be specific locations or scenarios that merit the use of a different Fault type (or a sequence or progression of multiple Faults) more consistent with the occurrence of a physical attack for those locations or scenarios.

Rationale for Requirement R3, Part 3.3.1
The applicable Transmission substation or Transmission station is the station that is assumed to be under attack for the purposes of this standard. Any damage to Transmission Stations or Transmission Substations in proximity is assumed to be collateral damage. The intent of CIP-014 is to cover the case when the applicable Transmission Station or Transmission Substation becomes inoperable. The SAR refers to the "total loss of communication and protection equipment at the substation." Requirement R3, Part 3.3.1 uses the "prior loss" wording to eliminate difficulties when performing simulations. When exploring possible attack scenarios, it is possible to develop scenarios that allow a fault prior to the loss of communication and protection systems. Protection systems typically operate within a few cycles, so a short delay between the fault and the loss of the protection system could allow breakers to operate. "Prior loss of communication and Protection Systems" eliminates this possibility, so the fault should be studied without the availability of local communications or Protection Systems. The use of delayed clearing times, typically Zone 2, is necessary because the applicable substation has lost local protection and all communications with other substations.

Rationale for Requirement R3, Part 3.3.2
The relative locations of the applicable Transmission Station or Transmission Substation and the neighboring substation will determine the best way to evaluate and study the combinations of substations. Every substation identified in Requirement R2 must be studied in at least one combination with its applicable Transmission Station or Transmission Substation. For example, if there is a single neighboring substation near the applicable substation, then the applicable and neighboring substation should be studied together. If there are two or more neighboring substations that are close together and both within 1,500 feet of the applicable substation, then the responsible entity may study the applicable substation with the combination of the two neighbors. If there are two or more neighboring substations on different sides of the applicable substation, then it can make more sense to study the applicable substation with each proximity substation individually. For purposes of the simulations, the faults should be applied at the same time or after the faults applied to the applicable Transmission Station or

Transmission Substation depending on the simulated event and any restrictions of the simulation software. Not all software packages allow for multiple simultaneous faults. The protection and communication systems at the proximate substations are expected to operate normally, so delayed clearing is not necessary.

Rationale for Requirement R3, Part 3.3.3
The DT believes that requiring documented justification for Faults being selected, without specifying Fault type, allows TOs to determine on a location-by-location basis what is a credible high-severity scenario for a physical attack and furthermore how to appropriately model the associated stability simulations. The DT also believes that a single justification may be used for multiple locations. Requirement 3 Part 3.3.3 allows the TOs to determine the type of fault with documented justification. If a fault type and justification is relevant to multiple Transmission Stations or Transmission Substations, there is no need to repeatedly document the same justification.

Rationale for Requirement R3, Part 3.3.4
Each simulation should include the removal of all Elements that Protection Systems and other controls are expected to automatically disconnect for the event. After the prior loss of communication and Protection Systems at the applicable Transmission station or Transmission substation, other Protection Systems should operate as expected for the event considered. The accurate simulation of Protection System actions is essential for correctly identifying the risk of instability, uncontrolled separation, or Cascading within an Interconnection.

Rationale for Requirement R3, Part 3.3.5
While there are commonly used generic clearing times for remote clearing that are consistent across the industry, actual clearing times can be shorter or longer depending on conditions and design considerations at an individual TO. The difference of a few cycles can have a significant impact on the transient behavior of generating units, therefore, it is required that the risk analysis use actual or more conservative clearing times.

Rationale for Requirement R4
Joint ownership of Transmission substations and Transmission stations was discussed in the Guidelines and Technical Basis of previous versions of the CIP-014-3 standard, but because ownership was not addressed in the standard language, the CIP-014-4 Risk Assessment Refinement SAR required clarification which resulted in the new requirement R4. TOs that have applicable jointly owned Transmission substations and Transmission stations should coordinate and document their individual and joint responsibilities for CIP-014-4 Requirements R3 and R5. TOs should be able to demonstrate sole or joint ownership through one-line diagrams with ownership demarcations and/or a letter of attestation stating which stations are solely or jointly owned.

Rationale for Requirement R5
An objective of the CIP-014-3 Risk Assessment Refinement SAR was to align study periods, frequency of studies, and the powerflow models used for the studies. A 36-month periodicity was chosen for the Requirement R5 risk assessment to reduce the periodicity options from previous versions of the standard.

Additionally, a single study periodicity is more easily aligned with project in-service date considerations and model choices. As called for in Project Scope item 3 of the CIP-014-3 Risk Assessment Refinement SAR, the risk assessment must comply with the methodology developed in Requirement R3, so this language was explicitly added to Requirement R5.

TOs shall review and, if necessary, update the list of applicable Transmission station(s) or Transmission substation(s) per Attachment 1 at least once every 36 months. The list of applicable Transmission station(s) and Transmission substation(s) shall include existing or planned to be in service within 36 months Transmission station(s) and Transmission substation(s). The 36-month cycle for updating the list of applicable Transmission station(s) or Transmission substation(s) per Attachment 1 aligns with the annual cycle for performing Planning Assessments per NERC Standard TPL-001. The 36-month risk assessment study cycle aligns with the 36-month planned-to-be-in-service date.

In addition to the performance of the risk assessment using Transmission station(s) and Transmission substation(s) identified in Requirement R1, any proximate Transmission station(s) and Transmission substation(s) identified in Requirement R2 should also be included in the risk assessment. Furthermore, any Transmission station(s) and Transmission substation(s) assessed due to having been identified per Requirement R1 should also be run as part of a proximate Transmission station(s) and Transmission substation(s) group per Requirement R2 if such an identification is made.

Rationale for Requirement R5, Part 5.1
If a TO performs a steady state analysis and identifies a Transmission station or substation that, if rendered inoperable or damaged, could result in instability, uncontrolled separation, or Cascading within an Interconnection, then dynamic analysis is not required for that Transmission station or substation. If a TO performs a dynamic analysis and identifies a Transmission station or substation that, if rendered inoperable or damaged, could result in instability, uncontrolled separation, or Cascading within an Interconnection, then steady state analysis is not required for that Transmission station or substation.

Rationale for Requirement R5, Part 5.2
The intent of this Requirement is that TOs do not have to reassess already identified and protected Transmission stations or substations (Requirement R5.3 and Requirements R7 through R10 still apply to those Transmission stations or substations). A new risk assessment will need to be performed if the TO wishes to determine whether or not a Transmission station or substation can be removed from identification and protection as outlined in Requirement R7.1.

Rationale for Requirement R5, Part 5.3
Identification of Primary Control Centers: After completing the risk assessment under Requirement R5 and verified under Requirement R6, it is important to additionally identify the primary control center that operationally controls each Transmission station or Transmission substation, that if rendered inoperable or damaged could result in instability, uncontrolled separation, or Cascading within an Interconnection. A primary control center “operationally controls” a Transmission station or Transmission substation when the control center’s electronic actions can cause direct physical actions at the identified Transmission station and Transmission substation, such as opening a breaker.

Rationale for Implementation Plan

In developing the Implementation Plan, the DT has determined that 24 calendar months for the CIP-014-4 implementation plan would allow adequate time for TOs and Transmission Operators (TOPs) to determine applicability, develop criteria, write or revise methodologies, perform assessments, and procure unaffiliated third parties for risk assessment verification (which some TOs have performed concurrently with their risk assessment analyses.

Furthermore, given a) FERC's sense of urgency stated in their original Order to revise CIP-014 (Docket No. RD23-2-000, issued December 15, 2022), b) the findings of NERC's report to FERC on April 14, 2023 (Evaluation of the Physical Security Reliability Standard and Physical Security Attacks to the Bulk-Power System), and c) the designation of Project 2023-06 as High Priority, the DT has determined that an Implementation Plan schedule of greater than 24 calendar months would not be responsive to FERC's concerns with sufficient urgency, and thus 24 calendar months is an appropriate timeframe. While the DT understands the time and resources required of entities to respond to this Implementation Plan, the DT believes that 24 calendar months properly balances the need to address the reliability risk and the time needed by entities to determine applicability, develop criteria, write or revise methodologies, perform assessments, and procure unaffiliated third parties for risk assessment verification.

CIP-014-4 Flowchart

The flowchart is a concise outline that guides through the steps for completing the risk assessment at least once every 36 calendar months, based on the Applicability in Attachment 1 and Requirements R1-R5.

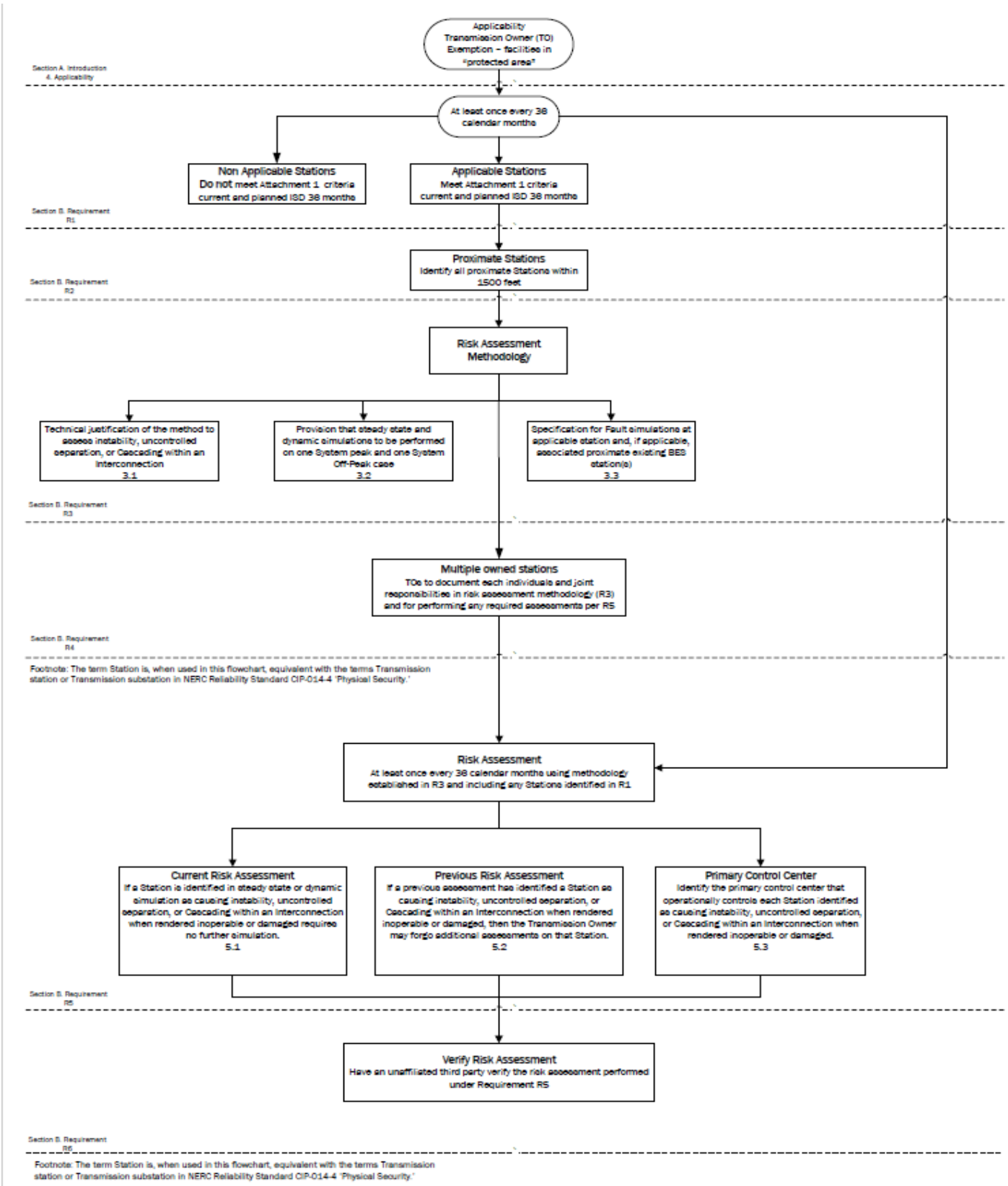
Applicability
Transmission Owner (TO) Exemption – facilities in "protected area"
Section A. Introduction 4. Applicability
At least once every 36 calendar months
Non Applicable Stations
Do not meet Attachment 1 criteria current and planned ISD 36 months
Applicable Stations
Meet Attachment 1 criteria current and planned ISD 36 months
Section B. Requirement R1
Proximate Stations
Identify all proximate Stations within 1500 feet
Section B. Requirement R2
Risk Assessment Methodology
Technical justification of the method to assess instability, uncontrolled separation, or Cascading within an Interconnection 3.1
Provision that steady state and dynamic simulations to be performed on one System peak and one System Off-Peak case 3.2
Specification for Fault simulations at applicable station and, if applicable, associated proximate existing BES station(s) 3.3
Section B. Requirement R3
Multiple owned stations
TOs to document each individuals and joint responsibilities in risk assessment methodology (R3) and for performing any required assessments per R5
Section B. Requirement R4
Footnote: The term Station is, when used in this flowchart, equivalent with the terms Transmission station or Transmission substation in NERC Reliability Standard CIP-014-4 'Physical Security.'
Risk Assessment
At least once every 36 calendar months using methodology established in R3 and including any Stations identified in R1
Current Risk Assessment
If a Station is identified in steady state or dynamic simulation as causing instability, uncontrolled separation, or Cascading within an Interconnection when rendered inoperable or damaged requires no further simulation. 5.1
Previous Risk Assessment
If a previous assessment has identified a Station as causing instability, uncontrolled separation, or Cascading within an Interconnection when rendered inoperable or damaged, then the Transmission Owner may forgo additional assessments on that Station. 5.2
Primary Control Center
Identify the primary control center that operationally controls each Station identified as causing instability, uncontrolled separation, or Cascading within an Interconnection when rendered inoperable or damaged. 5.3
Section B. Requirement R5
Verify Risk Assessment
Have an unaffiliated third party verify the risk assessment performed under Requirement R5
Section B. Requirement R6
Footnote: The term Station is, when used in this flowchart, equivalent with the terms Transmission station or Transmission substation in NERC Reliability Standard CIP-014-4 'Physical Security.'

Technical Rationale for Reliability Standard CIP-014-3

This section contains a "cut and paste" of the former Guidelines and Technical Basis (GTB) as-is of from CIP-014-3 standard to preserve any historical references. No modifications have been made.

Requirement R2 (This is Requirement R6 in CIP-014-4)
This requirement specifies verification of the risk assessment performed under Requirement R1 by an entity other than the owner or operator of the Requirement R1 risk assessment.

A verification of the risk assessment by an unaffiliated third party, as specified in Requirement R2, could consist of:

1. Certifying that the Requirement R1 risk assessment considers the Transmission stations and Transmission substations identified in Applicability Section 4.1.1.
2. Review of the model used to conduct the risk assessment to ensure it contains sufficient system topology to identify Transmission stations and Transmission substations that if rendered inoperable or damaged could cause instability, uncontrolled separation, or Cascading within an Interconnection.
3. Review of the Requirement R1 risk assessment methodology.

This requirement provides the flexibility for a TO to select from unaffiliated registered and non-registered entities with transmission planning or analysis experience to perform the verification of the Requirement R1 risk assessment. The term unaffiliated means that the selected verifying entity cannot be a corporate affiliate (i.e., the verifying or third party reviewer cannot be an entity that corporately controls, is controlled by, or is under common control with the TO). The verifying entity also cannot be a division of the TO that operates as a functional unit.

The prohibition on registered entities using a corporate affiliate to conduct the verification, however, does not prohibit a governmental entity (e.g., a city, a municipality, a U.S. federal power marketing agency, or any other political subdivision of U.S. or Canadian federal, state, or provincial governments) from selecting as the verifying entity another governmental entity within the same political subdivision. For instance, a U.S. federal power marketing agency may select as its verifier another U.S. federal agency to conduct its verification so long as the selected entity has transmission planning or analysis experience. Similarly, a TO owned by a Canadian province can use a separate agency of that province to perform the verification. The verifying entity, however, must still be a third party and cannot be a division of the registered entity that operates as a functional unit.

Requirement R2 also provides that the "verification may occur concurrent with or after the risk assessment performed under Requirement R1." This provision is designed to provide the TO the flexibility to work with the verifying entity throughout (i.e., concurrent with) the risk assessment, which for some TOs may be more efficient and effective. In other words, a TO could collaborate with their unaffiliated verifying entity to perform the risk assessment under Requirement R1 such that both Requirement R1 and

Requirement R2 are satisfied concurrently. The intent of Requirement R2 is to have an entity other than the owner or operator of the facility to be involved in the risk assessment process and have an opportunity to provide input. Accordingly, Requirement R2 is designed to allow entities the discretion to have a two-step process, where the TO performs the risk assessment and subsequently has a third party review that assessment, or a one-step process, where the entity collaborates with a third party to perform the risk assessment.

Characteristics to consider in selecting a third party reviewer could include:

- Registered Entity with applicable planning and reliability functions.
- Experience in power system studies and planning.
- The entity's understanding of the MOD standards, TPL standards, and facility ratings as they pertain to planning studies.
- The entity's familiarity with the Interconnection within which the TO is located.

With respect to the requirement that TO develop and implement procedures for protecting confidential and sensitive information, the TO could have a method for identifying documents that require confidential treatment. One mechanism for protecting confidential or sensitive information is to prohibit removal of sensitive or confidential information from the TO's site. TOs could include such a prohibition in a non-disclosure agreement with the verifying entity.

A Technical feasibility study is not required in the Requirement R2 documentation of the technical basis for not modifying the identification in accordance with the recommendation.

On the issue of the difference between a verifier in Requirement R2 and a reviewer in Requirement R6, the DT indicates that the verifier will confirm that the risk assessment was completed in accordance with Requirement R1, including the number of Transmission stations and substations identified, while the reviewer in Requirement R6 is providing expertise on the manner in which the evaluation of threats was conducted in accordance with Requirement R4, and the physical security plan in accordance with Requirement R5. In the latter situation there is no verification of a technical analysis, rather an application of experience and expertise to provide guidance or recommendations, if needed.

Parts 2.4 and 6.4 require the entities to have procedures to protect the confidentiality of sensitive or confidential information. Those procedures may include the following elements:

1. Control and retention of information on site for third party verifiers/reviewers.
2. Only "need to know" employees, etc., get the information.
3. Marking documents as confidential
4. Securely storing and destroying information when no longer needed.
5. Not releasing information outside the entity without, for example, General Counsel sign-off.

Requirement R3 (This is now Requirement R7 in CIP-014-4)
Some TOPs will have obligations under this standard for certain primary control centers. Those obligations, however, are contingent upon a Transmission Owner(TO) first completing the risk assessment specified by Requirement R1 and the verification specified by Requirement R2. Requirement R3 is intended to ensure that a TOP that has operational control of a primary control center identified in Requirement R1 receive notice so that the TOP may fulfill the rest of the obligations required in Requirements R4 through R6. Since the timing obligations in Requirements R4 through R6 are based upon completion of Requirement R2, the TO must also include within the notice the date of completion of Requirement R2. Similarly, the TO must notify the TOP of any removals from identification that result from a subsequent risk assessment under Requirement R1 or as a result of the verification process under Requirement R2.

Requirement R4 (This is now Requirement R8 in CIP-014-4)
This requirement requires owners and operators of facilities identified by the Requirement R1 risk assessment and that are verified under Requirement R2 to conduct an assessment of potential threats and vulnerabilities to those Transmission stations, Transmission substations, and primary control centers using a tailored evaluation process. Threats and vulnerabilities may vary from facility to facility based on any number of factors that include, but are not limited to, location, size, function, existing physical security protections, and attractiveness as a target.

In order to effectively conduct a threat and vulnerability assessment, the asset owner may be the best source to determine specific site vulnerabilities, but current and evolving threats may best be determined by others in the intelligence or law enforcement communities. A number of resources have been identified in the standard, but many others exist and asset owners are not limited to where they may turn for assistance. Additional resources may include state or local fusion centers, U.S. Department of Homeland Security, Federal Bureau of Investigations (FBI), Public Safety Canada, Royal Canadian Mounted Police, and InfraGard chapters coordinated by the FBI.

The Responsible Entity is required to take a number of factors into account in Parts 4.1 to 4.3 in order to make a risk-based evaluation under Requirement R4.

To assist in determining the current threat for a facility, the prior history of attacks on similarly protected facilities should be considered when assessing probability and likelihood of occurrence at the facility in question.

Resources that may be useful in conducting threat and vulnerability assessments include:

- NERC Security Guideline for the Electricity Sector: Physical Security.
- NERC Security Guideline: Physical Security Response.
- ASIS International General Risk Assessment Guidelines.
- ASIS International Facilities Physical Security Measure Guideline.
- ASIS International Security Management Standard: Physical Asset Protection.

- Whole Building Design Guide - Threat/Vulnerability Assessments.

Requirement R5 (This is now Requirement R9 in CIP-014-4)
This requirement specifies development and implementation of a security plan(s) designed to protect against attacks to the facilities identified in Requirement R1 based on the assessment performed under Requirement R4.

Requirement R5 specifies the following attributes for the physical security plan:

- *Resiliency or security measures designed collectively to deter, detect, delay, assess, communicate, and respond to potential physical threats and vulnerabilities identified during the evaluation conducted in Requirement R4.*

  Resiliency may include, among other things:

  a. System topology changes,

  b. Spare equipment,

  c. Construction of a new Transmission station or Transmission substation.

  While most security measures will work together to collectively harden the entire site, some may be allocated to protect specific critical components. For example, if protection from gunfire is considered necessary, the entity may only install ballistic protection for critical components, not the entire site.

- *Law enforcement contact and coordination information.*

  Examples of such information may be posting 9-1-1 for emergency calls and providing substation safety and familiarization training for local and federal law enforcement, fire department, and Emergency Medical Services.

- *A timeline for executing the physical security enhancements and modifications specified in the physical security plan.*

  Entities have the flexibility to prioritize the implementation of the various resiliency or security enhancements and modifications in their security plan according to risk, resources, or other factors. The requirement to include a timeline in the physical security plan for executing the actual physical security enhancements and modifications does not also require that the enhancements and modifications be completed within 120 days. The actual timeline may extend beyond the 120 days, depending on the amount of work to be completed.

- *Provisions to evaluate evolving physical threats, and their corresponding security measures, to the Transmission station(s), Transmission substation(s), or primary control center(s).*

  A registered entity's physical security plan should include processes and responsibilities for obtaining and handling alerts, intelligence, and threat warnings from various sources. Some of these sources could include the ERO, E-ISAC, and US and/or Canadian federal agencies. This information should be used to reevaluate or consider changes in the security plan and corresponding security measures of the security plan found in R5.

Incremental changes made to the physical security plan prior to the next required third party review do not require additional third party reviews.

Requirement R6 (This is now Requirement R10 in CIP-014-4)
This requirement specifies review by an entity other than the TO or TOP with appropriate expertise for the evaluation performed according to Requirement R4 and the security plan(s) developed according to Requirement R5. As with Requirement R2, the term unaffiliated means that the selected third party reviewer cannot be a corporate affiliate (*i.e.,* the third party reviewer cannot be an entity that corporately controls, is controlled by or is under common control with, the TOP). A third party reviewer also cannot be a division of the TOP that operates as a functional unit.

As noted in the guidance for Requirement R2, the prohibition on registered entities using a corporate affiliate to conduct the review, however, does not prohibit a governmental entity from selecting as the third party reviewer another governmental entity within the same political subdivision. For instance, a city or municipality may use its local enforcement agency, so long as the local law enforcement agency satisfies the criteria in Requirement R6. The third party reviewer, however, must still be a third party and cannot be a division of the registered entity that operates as a functional unit.

The Responsible Entity can select from several possible entities to perform the review:

- *An entity or organization with electric industry physical security experience and whose review staff has at least one member who holds either a Certified Protection Professional or Physical Security Professional certification.*

  In selecting Certified Protection Professional and Physical Security Professional for use in this standard, the DT believed it was important that if a private entity such as a consulting or security firm was engaged to conduct the third party review, they must tangibly demonstrate competence to conduct the review. This includes electric industry physical security experience and either of the premier security industry certifications sponsored by ASIS International. The ASIS certification program was initiated in 1977, and those that hold the Certified Protection Professional certification are board certified in security management. Those that hold the Physical Security Professional certification are board certified in physical security.
- *An entity or organization approved by the ERO.*
- *A governmental agency with physical security expertise.*
- *An entity or organization with demonstrated law enforcement, government, or military physical security expertise.*

As with the verification under Requirement R2, Requirement R6 provides that the "review may occur concurrently with or after completion of the evaluation performed under Requirement R4 and the security plan development under Requirement R5." This provision is designed to provide applicable TOs and TOPs the flexibility to work with the third party reviewer throughout (*i.e.,* concurrent with) the evaluation performed according to Requirement R4 and the security plan(s) developed according to Requirement R5, which for some Responsible Entities may be more efficient and effective. In other

words, a TO or TOP could collaborate with their unaffiliated third party reviewer to perform an evaluation of potential threats and vulnerabilities (Requirement R4) and develop a security plan (Requirement R5) to satisfy Requirements R4 through R6 simultaneously. The intent of Requirement R6 is to have an entity other than the owner or operator of the facility to be involved in the Requirement R4 evaluation and the development of the Requirement R5 security plans and have an opportunity to provide input on the evaluation and the security plan. Accordingly, Requirement R6 is designed to allow entities the discretion to have a two-step process, where the TO performs the evaluation and develops the security plan itself and then has a third party review that assessment, or a one-step process, where the entity collaborates with a third party to perform the evaluation and develop the security plan.

Rationale for Attachment 1

The drafting team moved the applicability language from CIP-014-3 to Attachment 1 to make the standard easier to read.

The purpose of Reliability Standard CIP-014 is to protect Transmission stations and Transmission substations, and their associated primary control centers that if rendered inoperable or damaged as a result of a physical attack could result in instability, uncontrolled separation, or Cascading within an Interconnection. To properly include those entities that own or operate such Facilities, the Reliability Standard CIP-014 first applies to TOs that own Transmission Facilities that meet the specific criteria in Applicability Section 4.1.1.1 through 4.1.1.4. The Facilities described in Applicability Section 4.1.1.1 through 4.1.1.4 mirror those Transmission Facilities that meet the bright line criteria for "Medium Impact" Transmission Facilities under Attachment 1 of Reliability Standard CIP-002-5.1. Each TO that owns Transmission Facilities that meet the criteria in Section 4.1.1.1 through 4.1.1.4 is required to perform a risk assessment as specified in Requirement R1 to identify its Transmission stations and Transmission substations, and their associated primary control centers, that if rendered inoperable or damaged as a result of a physical attack could result in instability, uncontrolled separation, or Cascading within an Interconnection. The DT expects this population will be small and that many TOs that meet the applicability of this standard will not actually identify any such Facilities. Only those TOs with Transmission stations or Transmission substations identified in the risk assessment (and verified under Requirement R2) have performance obligations under Requirements R3 through R6.

This standard also applies to TOPs. A TOP's obligations under the standard, however, are only triggered if the TOP is notified by an applicable TO under Requirement R3 that the TOP operates a primary control center that operationally controls a Transmission station(s) or Transmission substation(s) identified in the Requirement R1 risk assessment. A primary control center operationally controls a Transmission station or Transmission substation when the control center's electronic actions can cause direct physical action at the identified Transmission station or Transmission substation, such as opening a breaker, as opposed to a control center that only has information from the Transmission station or Transmission substation and must coordinate direct action through another entity. Only TOPs who are notified that they have primary control centers under this standard have performance obligations under Requirements R4 through R6. In other words, primary control center for purposes of this Standard is the control center that the TO or TOP, respectively, uses as its primary, permanently-manned site to physically operate a Transmission station or Transmission substation that is identified in Requirement R1 and verified in Requirement R2. Control

centers that provide back-up capability are not applicable, as they are a form of resiliency and intentionally redundant.

The DT considered several options for bright line criteria that could be used to determine applicability and provide an initial threshold that defines the set of Transmission stations and Transmission substations that would meet the directives of the FERC order on physical security (*i.e.*, those that could cause instability, uncontrolled separation, or Cascading within an Interconnection). The DT determined that using the criteria for Medium Impact Transmission Facilities in Attachment 1 of CIP-002-5.1 would provide a conservative threshold for defining which Transmission stations and Transmission substations must be included in the risk assessment in Requirement R1 of CIP-014. Additionally, the DT concluded that using the CIP-002-5.1 Medium Impact criteria was appropriate because it has been approved by stakeholders, NERC, and FERC, and its use provides a technically sound basis to determine which TOs should conduct the risk assessment. As described in CIP-002-5.1, the failure of a Transmission station or Transmission substation that meets the Medium Impact criteria could have the capability to result in exceeding one or more Interconnection Reliability Operating Limits (IROLs). The DT understands that using this bright line criteria to determine applicability may require some TOs to perform risk assessments under Requirement R1 that will result in a finding that none of their Transmission stations or Transmission substations would pose a risk of instability, uncontrolled separation, or Cascading within an Interconnection. However, the DT determined that higher bright lines could not be technically justified to ensure inclusion of all Transmission stations and Transmission substations, and their associated primary control centers that, if rendered inoperable or damaged as a result of a physical attack could result in instability, uncontrolled separation, or Cascading within an Interconnection. Further guidance and technical basis for the bright line criteria for Medium Impact Facilities can be found in the Guidelines and Technical Basis section of CIP-002-5.1.

Additionally, the DT determined that it was not necessary to include Generator Operators and Generator Owners in the Reliability Standard. First, Transmission stations or Transmission substations interconnecting generation facilities are considered when determining applicability. TOs will consider those Transmission stations and Transmission substations that include a Transmission station on the high side of the Generator Step-up transformer using Applicability Section 4.1.1.1 and 4.1.1.2. As an example, a Transmission station or Transmission substation identified as a TO facility that interconnects generation will be subject to the Requirement R1 risk assessment if it operates at 500kV or greater or if it is connected at 200 kV – 499kV to three or more other Transmission stations or Transmission substations and has an "aggregate weighted value" exceeding 3,000 according to the table in Applicability Section 4.1.1.2. Second, the Transmission analysis or analyses conducted under Requirement R1 should take into account the impact of the loss of generation connected to applicable Transmission stations or Transmission substations. Additionally, the FERC order does not explicitly mention generation assets and is reasonably understood to focus on the most critical Transmission Facilities. The diagram below shows an example of a station.

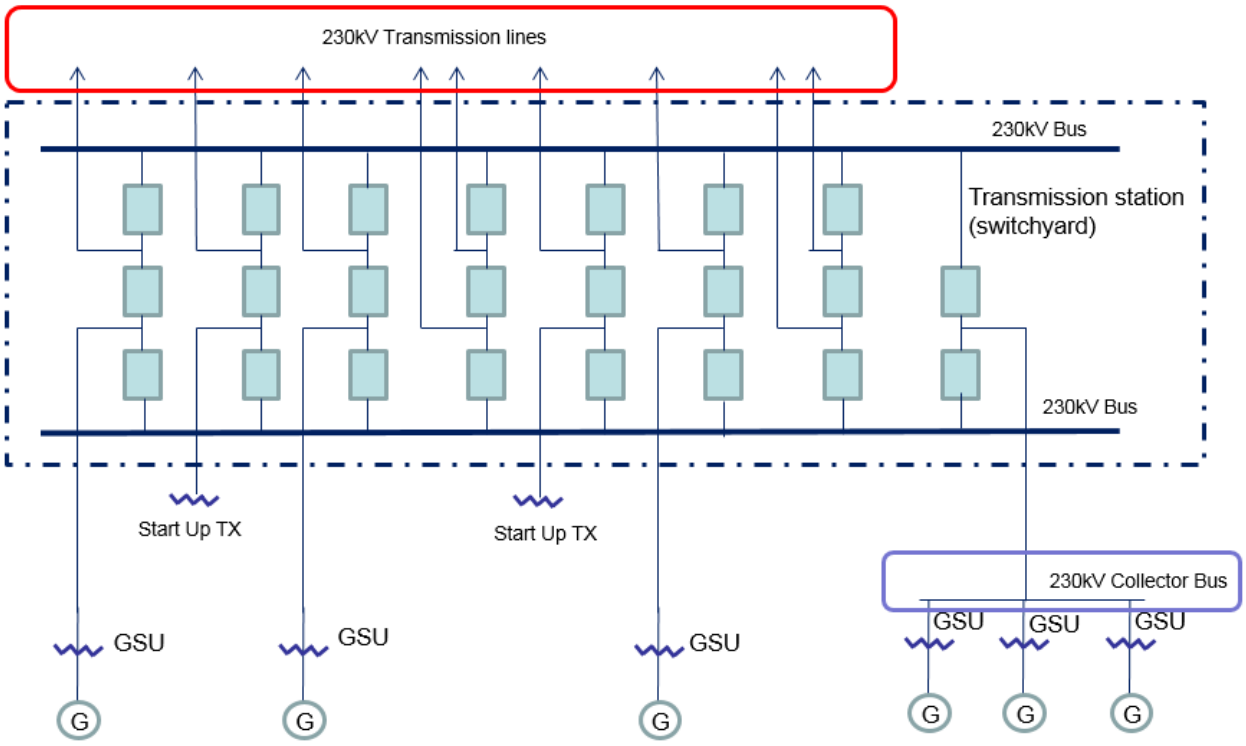

Also, the DT uses the phrase "Transmission stations or Transmission substations" to recognize the existence of both stations and substations. Many entities in industry consider a substation to be a location with physical borders (i.e., fence, wall, etc.) that contains at least an autotransformer. Locations also exist that do not contain autotransformers, and many entities in industry refer to those locations as stations (switching stations or switchyards). Therefore, the DT chose to use both "station" and "substation" to refer to the locations where groups of Transmission Facilities exist.

On the issue of joint ownership, the DT recognizes that this issue is not unique to CIP-014, and expects that the applicable TOs and TOPs will develop memorandums of understanding, agreements, Coordinated Functional Registrations, or procedures, etc., to designate responsibilities under CIP-014 when joint ownership is at issue, which is similar to what many entities have completed for other Reliability Standards.

The language contained in the applicability section regarding the collector bus is directly copied from CIP-002-5.1, Attachment 1, and has no additional meaning within the CIP-014 standard.

Timeline

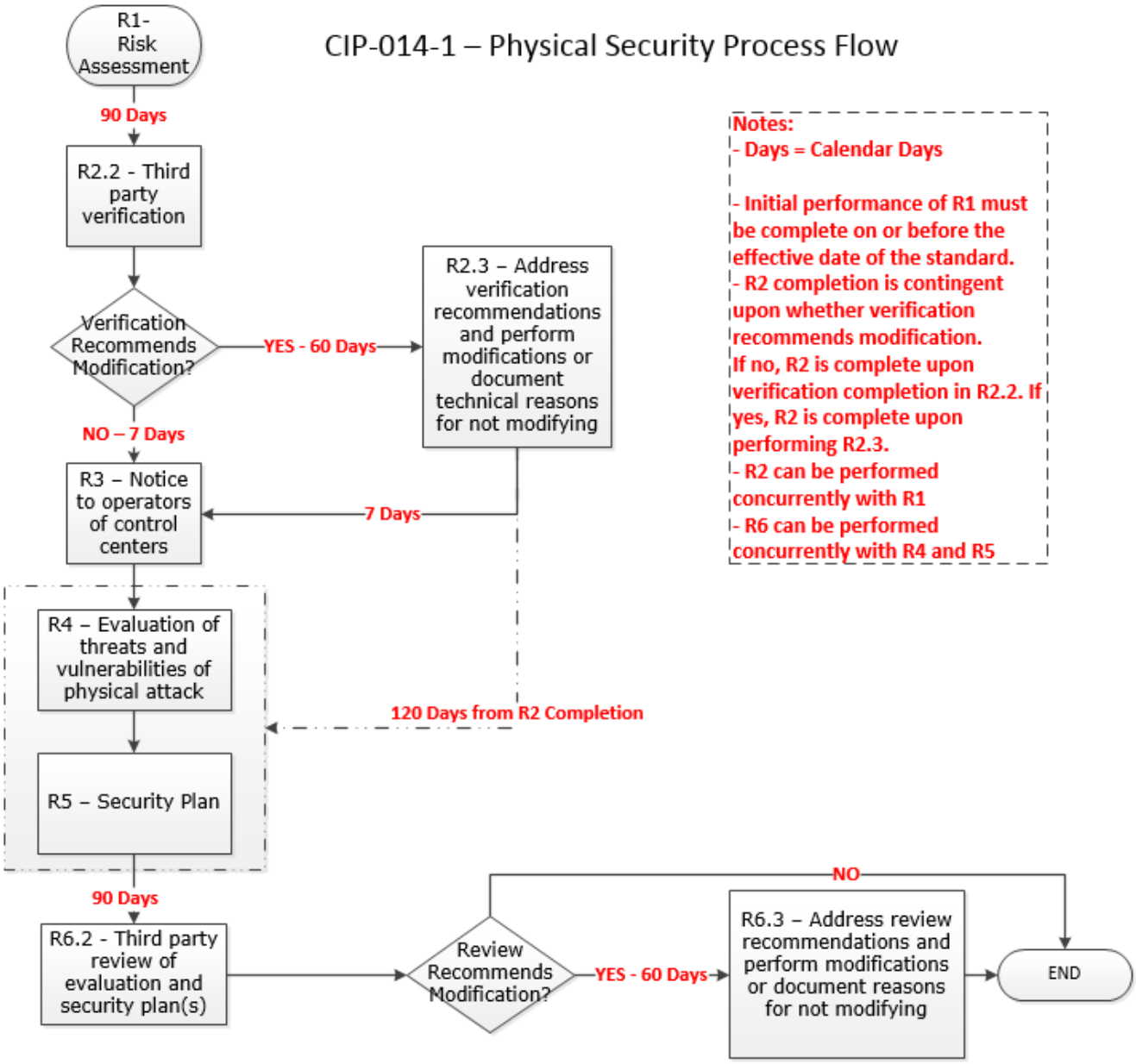
CIP-014-1 – Physical Security Process Flow
R1- Risk Assessment
90 Days
R2.2 - Third party verification
Verification Recommends Modification?
YES - 60 Days
R2.3 – Address verification recommendations and perform modifications or document technical reasons for not modifying
NO – 7 Days
R3 – Notice to operators of control centers
7 Days
R4 – Evaluation of threats and vulnerabilities of physical attack
120 Days from R2 Completion
R5 – Security Plan
90 Days
R6.2 - Third party review of evaluation and security plan(s)
Review Recommends Modification?
YES - 60 Days
NO
R6.3 – Address review recommendations and perform modifications or document reasons for not modifying
END
Notes:
- Days = Calendar Days
- Initial performance of R1 must be complete on or before the effective date of the standard.
- R2 completion is contingent upon whether verification recommends modification. If no, R2 is complete upon verification completion in R2.2. If yes, R2 is complete upon performing R2.3.
- R2 can be performed concurrently with R1
- R6 can be performed concurrently with R4 and R5

Rationale

During development of this standard, text boxes were embedded within the standard to explain the rationale for various parts of the standard. Upon Board of Trustees approval, the text from the rationale text boxes was moved to this section.

Rationale for Requirement R1 (This is for the old Requirement R1 in CIP-014-3):
This requirement meets the FERC directive from paragraph 6 of its March 7, 2014 order on physical security to perform a risk assessment to identify which facilities if rendered inoperable or damaged could impact an Interconnection through instability, uncontrolled separation, or cascading failures. The requirement is not intended to bring within the scope of the standard a Transmission station or Transmission substation unless the applicable TO determines through technical studies and analyses based on objective analysis, technical expertise, operating experience and experienced judgment that the loss of such facility would have a critical impact on the operation of the Interconnection in the event the asset is rendered inoperable or damaged. In the November 20, 2014 Order, FERC reiterated that "only an instability that has a "critical impact on the operation of the interconnection" warrants finding that the facility causing the instability is critical under Requirement R1." The TO may determine the criteria for critical impact by considering, among other criteria, any of the following:

- Criteria or methodology used by Transmission Planners or Planning Coordinators in TPL-001-4, Requirement R6
- NERC EOP-004-2 reporting criteria
- Area or magnitude of potential impact

Requirement R1 also meets the FERC directive for periodic reevaluation of the risk assessment by requiring the risk assessment to be performed every 30 months (or 60 months for an entity that has not identified in a previous risk assessment any Transmission stations or Transmission substations that if rendered inoperable or damaged could result in instability, uncontrolled separation, or Cascading within an Interconnection).

After identifying each Transmission station and Transmission substation that meets the criteria in Requirement R1, it is important to additionally identify the primary control center that operationally controls that Transmission station or Transmission substation (i.e., the control center whose electronic actions can cause direct physical actions at the identified Transmission station and Transmission substation, such as opening a breaker, compared to a control center that only has the ability to monitor the Transmission station and Transmission substation and, therefore, must coordinate direct physical action through another entity).

Rationale for Requirement R2 (This is now Requirement R6 in CIP-014-4):
This requirement meets the FERC directive from paragraph 11 in the order on physical security requiring verification by an entity other than the owner or operator of the risk assessment performed under Requirement R1.

This requirement provides the flexibility for a TO to select registered and non-registered entities with transmission planning or analysis experience to perform the verification of the Requirement R1 risk assessment. The term "unaffiliated" means that the selected verifying entity cannot be a corporate affiliate (i.e., the verifying entity cannot be an entity that controls, is controlled by, or is under common control with, the TO). The verifying entity also cannot be a division of the TO that operates as a functional unit. The term "unaffiliated" is not intended to prohibit a governmental entity from using another government entity to be a verifier under Requirement R2.

Requirement R2 also provides the TO the flexibility to work with the verifying entity throughout the Requirement R1 risk assessment, which for some TO may be more efficient and effective. In other words, a TO could coordinate with their unaffiliated verifying entity to perform a Requirement R1 risk assessment to satisfy both Requirement R1 and Requirement R2 concurrently.

Planning Coordinator is a functional entity listed in Part 2.1. The Planning Coordinator and Planning Authority are the same entity as shown in the NERC Glossary of Terms Used in NERC Reliability Standards.

Rationale for Requirement R3 (This is now Requirement R7 in CIP-014-4):
Some TOPs will have obligations under this standard for certain primary control centers. Those obligations, however, are contingent upon a TO first identifying which Transmission stations and Transmission substations meet the criteria specified by Requirement R1, as verified according to Requirement R2. This requirement is intended to ensure that a TOP that has operational control of a primary control center identified in Requirement R1, Part 1.2 of a Transmission station or Transmission substation verified according to Requirement R2 receives notice of such identification so that the TOP may timely fulfill its resulting obligations under Requirements R4 through R6. Since the timing obligations in Requirements R4 through R6 are based upon completion of Requirement R2, the TO must also include notice of the date of completion of Requirement R2. Similarly, the TO must notify the TOP of any removals from identification that result from a subsequent risk assessment under Requirement R1 or the verification process under Requirement R2.

Rationale for Requirement R4 (This is now Requirement R8 in CIP-014-4):
This requirement meets the FERC directive from paragraph 8 in the order on physical security that the reliability standard must require tailored evaluation of potential threats and vulnerabilities to facilities identified in Requirement R1 and verified according to Requirement R2. Threats and vulnerabilities may vary from facility to facility based on factors such as the facility's location, size, function, existing protections, and attractiveness of the target. As such, the requirement does not mandate a one-size-fits-all approach but requires entities to account for the unique characteristics of their facilities.

Requirement R4 does not explicitly state when the evaluation of threats and vulnerabilities must occur or be completed. However, Requirement R5 requires that the entity's security plan(s), which is dependent on the Requirement R4 evaluation, must be completed within 120 calendar days following completion of Requirement R2. Thus, an entity has the flexibility when to complete the Requirement R4 evaluation, provided that it is completed in time to comply with the requirement in Requirement R5 to develop a physical security plan 120 calendar days following completion of Requirement R2.

Rationale for Requirement R5 (This is now Requirement R9 in CIP-014-4):
This requirement meets the FERC directive from paragraph 9 in the order on physical security requiring the development and implementation of a security plan(s) designed to protect against attacks to the facilities identified in Requirement R1 based on the assessment performed under Requirement R4.

Rationale for Requirement R6 (This is now Requirement R10 in CIP-014-4):
This requirement meets the FERC directive from paragraph 11 in the order on physical security requiring review by an entity other than the owner or operator with appropriate expertise of the evaluation performed according to Requirement R4 and the security plan(s) developed according to Requirement R5.

As with the verification required by Requirement R2, Requirement R6 provides TOs and TOPs the flexibility to work with the third party reviewer throughout the Requirement R4 evaluation and the development of the Requirement R5 security plan(s). This would allow entities to satisfy their obligations under Requirement R6 concurrent with the satisfaction of their obligations under Requirements R4 and R5.

NERC
NORTH AMERICAN ELECTRIC RELIABILITY CORPORATION

Technical Rationale

Project 2023-06 CIP-014 Risk Assessment Refinement
Reliability Standard CIP-014-4 | ~~June 2025~~March 2026

CIP-014-4 – Physical Security

In performing the risk assessment, the Transmission Owner (TO) should first identify their population of Transmission stations and Transmission substations that meet the criteria contained in Attachment 1. The Standard requires the ~~Transmission Owner~~TO to perform a risk assessment, consisting of transmission analyses to determine which of those Transmission stations and Transmission s~~S~~ubstations, if rendered inoperable or damaged, could result in instability, uncontrolled separation, or Cascading within an Interconnection.

The purpose of Reliability Standard CIP-014 is to protect Transmission stations and Transmission substations, and their associated primary control centers, that if rendered inoperable or damaged, ~~as a result of~~due to a physical attack, could ~~result in~~cause instability, uncontrolled separation, or Cascading within an Interconnection. To properly identify candidates for such Transmission station(s) and Transmission substation(s), the ~~Transmission Owner~~TO shall evaluate the criteria listed in Attachment 1.

Rationale for Requirement R1

The Standard Authorization Request (SAR) directed the drafting team (DT) to clarify the in-service window. It also directed the DT to correct any discrepancies between the study period, frequency of study, and the base case(s) a TO uses. In the previous version of CIP-014, the 30-month time frame and the 24-month planned-to-be-in-service date could, if not carefully applied, lead to gaps between models and study horizons. Per the ~~Standard Authorization Request~~ (SAR), CIP-014-4 has consolidated these multiple timelines into one.

Requirement R1 is revised to ensure that each ~~Transmission Owner~~TO establishes a list of applicable Transmission station(s) or Transmission substation(s) in accordance with Attachment 1. Aligning the 36 calendar months look ahead in Requirement R1 with the 36 calendar months risk assessment cycle ensures that system topology of the cases used to assess applicability is consistent with the system topology in the risk assessment models.

~~Transmission Owners~~TOs shall review and, if necessary, update the list of applicable Transmission station(s) or Transmission substation(s) per Attachment 1 at least once every 36 calendar months. The list of applicable Transmission station(s) or Transmission substation(s) shall include existing ~~or planned to be in service within 36 calendar months~~Facilities and Transmission station(s) and Transmission substation(s)~~.~~ ~~The~~ planned to be in service within 36 calendar months~~ cycle for updating the list of applicable Transmission station(s) or Transmission substation(s) per Attachment 1 aligns with the annual cycle for performing Planning Assessments per NERC Standard TPL-001~~. The 36 calendar months risk assessment study cycle aligns with the 36 calendar months planned-to-be-in-service date. "Planned to be in-service"

should be taken to mean all Transmission station(s) and Transmission substation(s) as modeled in the base cases for the Near-Term Transmission Planning Horizon.

Rationale for Requirement R2

The distance chosen in requirement R2 is based on guidelines that considered a variety of plausible attack scenarios capable of rendering a substation inoperable.

The ~~drafting team~~DT ~~choose~~chose 1,500 feet or 457 meters (the shortest distance, measured substation fence line to substation fence line) in Requirement R2 ~~is based on the study from America's Cyber Defense Agency developed in partnership with the Federal Bureau of Investigation (FBI). The~~after review of the Department of Homeland Security (DHS)-Department of Justice (DOJ) Bomb Threat Stand-Off Card. The Bomb Threat Stand-Off Card is a quick reference guide providing recommended evacuation and shelter-in-place distances for various types and sizes of Improvised Explosive Devices (IED), based on version of August, 2025.[1]

The guidance above allowed the DT to draft language that clarified what study scenario(s) and other study assumptions are appropriate and reasonable considering the intent of CIP-014 and the potential range of issues during a physical attack. Simulations should incorporate the loss of station elements without the reliance on local system protection. Clarifying how to account for adjacent Transmission stations or Transmission substations of differing ownership as well as for those Transmission stations or Transmission substations within line-of-sight to each other. These provide limits to what the TO must study and avoid including an explicit representation of the physical event in the standard.

Accurate simulation of the event was deemed a priority of the ~~Drafting Team (~~DT~~)~~. The DT felt that ownership of proximate substations, as identified in Requirement R2, was irrelevant to Bulk Electric System ~~(BES)~~ impact.

The Transmission station(s) or Transmission substation(s) identified in Requirement R2 are only intended for use in the Requirement R5 risk assessment and the Requirement R6 third-party verification to properly account for additional equipment that, if also damaged during an event, could lead to loss of additional Facilities. They are not intended to be subject to Requirements R7 through R10. Requirements R7 through R10 are only relevant for the Transmission substation(s) or Transmission substation(s) identified in Requirement R1.

Rationale for Requirement R3

The new Requirement R3 fulfills the first item in the SAR to "clarify the risk assessment methods" and that the "methods should account for dynamic studies." Requirement R3 also fulfills other items in the SAR around case selection, technically supported rationales, the loss of communications, and local protection within the affected station. The previous Requirement R3 is now Requirement R7 of CIP-014-4.

[1] https://www.cisa.gov/resources-tools/resources/dhs-doj-bomb-threat-stand-card

Per Requirement R3, each ~~Transmission Owner~~TO is required to have a risk assessment methodology, including the criteria by which analytical results will be examined to identify Transmission station(s) or Transmission substation(s) that if rendered inoperable or damaged as a result of a physical attack could result in instability, uncontrolled separation, or Cascading within an Interconnection. The ~~Transmission Owner~~TO is not required to develop its own methodology and is free to use a methodology developed elsewhere, such as in coordination with neighboring ~~Transmission Owners~~TOs or Independent System Operators (ISOs).

Rationale for Requirement R3, Part 3.1

~~Transmission Owners~~TOs should determine the amount of unacceptable load loss and generation loss within an Interconnection when determining the impact of an event to the Transmission system. The thresholds identifying unacceptable generation and load losses should be the total of the losses within the TO's footprint and losses external to the Transmission Owner's footprint. Criteria for measures such as load loss or generation loss should consider the impact to the Interconnection.

While the use of Recommended Interconnection Resource Loss Protection Criteria (RLPC) provides one approach to generation loss—setting these thresholds based on the two largest potential resource losses in an Interconnection as detailed in Attachment A of NERC Reliability Standard BAL-003-2—other methods may also be appropriate, as determined by the TO. The RLPC values should be taken from the latest approved version of NERC's annual 'Frequency Response Annual Analysis' report.

Use of the RLPC recommendations in accordance with the latest version of NERC's 'Frequency Response Annual Analysis' report is an example of technically justified thresholds for unacceptable generation and load loss within an Interconnection. Use of lower values than the RLPC recommendations is also technically justifiable. Use of higher values than the RLPC recommendations would require additional technical justification.

Large loss of generation or load due to the evaluated disturbance could result in severe System impacts. The documented risk assessment methodology shall include the amount of unacceptable load loss and generation loss, that could result in instability, uncontrolled separation, or Cascading within an Interconnection. Conditions and thresholds used for determining critical Transmission station(s) or Transmission substation(s), i.e., those that if rendered inoperable or damaged as a result of a physical attack could result in instability, uncontrolled separation, or Cascading within an Interconnection, should be part of the documented risk assessment methodology.

It is up to the ~~Transmission Owner~~TO to identify post-event measures that can be used to assess the criticality of a Transmission ~~substation~~station or Transmission substation. Suggested measures are listed below. A ~~Transmission Owner~~TO can decide that one or more of the items are not applicable to their location within the interconnection and if any additional items should be included.

The following parameters can be used to evaluate the steady-state and/or dynamic analysis:

- Steady state voltages

- Transient voltage response
- Thermal loading of Facilities
- Relay loadability
- Rotor angle stability
- Frequency exceeding generator limits
- Frequency stability
- Acceptable damping of oscillations
- Cascading line tripping
- Steady-state voltage stability

Rationale for Requirement R3, Part 3.2
The performance of both steady state and dynamics simulations is required for all applicable Transmission station(s) and substation(s). Dynamic simulations are required by the ~~Standard~~standard because exclusively performing steady-state simulations ~~are~~is insufficient for determining whether the loss of a Transmission station or Transmission substation could result in instability, uncontrolled separation, or Cascading within an Interconnection.

Rationale for Requirement R3, Part 3.3
~~A~~Historically, simulation of a ~~Fault provides a reasonable assumption for possible events that could impact a single~~three-phase Fault at applicable Transmission station~~ or~~(s) and Transmission substation~~, and for events that could simultaneously impact multiple Transmission stations or Transmission substations.~~(s) appears to be the prevalent assumption used by the majority of TOs in the performance of stability analyses for CIP-014 risk assessments. The DT has determined, however, that there may be specific locations or scenarios that merit the use of a different Fault type (or a sequence or progression of multiple Faults) more consistent with the occurrence of a physical attack for those locations or scenarios.

Rationale for Requirement R3, Part ~~3.4~~3.3.1
The ~~requirement that simulations shall assume the loss of communications and system protection is consistent with the SAR. In accordance with the SAR, the term "~~applicable Transmission substation or Transmission station is the station that is assumed to be under attack for the purposes of this standard. Any damage to Transmission Stations or Transmission Substations in proximity is assumed to be collateral damage. The intent of CIP-014 is to cover the case when the applicable Transmission Station or Transmission Substation becomes inoperable~~" includes~~. The SAR refers to the "total loss of communication and protection equipment at the substation~~, necessitating delayed clearance from far-end relaying to isolate the event's impacts.~~." Requirement R3, Part 3.3.1 uses the "prior loss" wording to eliminate difficulties when performing simulations. When exploring possible attack scenarios, it is possible to develop scenarios that allow a fault prior to the loss of communication and protection systems. Protection systems typically operate within a few cycles, so a short delay between the fault and the loss of the protection system could allow breakers to operate. "Prior loss of communication and Protection

Systems" eliminates this possibility, so the fault should be studied without the availability of local communications or Protection Systems. The use of delayed clearing times, typically Zone 2, is necessary because the applicable substation has lost local protection and all communications with other substations.

Rationale for Requirement R3, Part 3.3.2

The relative locations of the applicable Transmission Station or Transmission Substation and the neighboring substation will determine the best way to evaluate and study the combinations of substations. Every substation identified in Requirement R2 must be studied in at least one combination with its applicable Transmission Station or Transmission Substation. For example, if there is a single neighboring substation near the applicable substation, then the applicable and neighboring substation should be studied together. If there are two or more neighboring substations that are close together and both within 1,500 feet of the applicable substation, then the responsible entity may study the applicable substation with the combination of the two neighbors. If there are two or more neighboring substations on different sides of the applicable substation, then it can make more sense to study the applicable substation with each proximity substation individually. For purposes of the simulations, the faults should be applied at the same time or after the faults applied to the applicable Transmission Station or Transmission Substation depending on the simulated event and any restrictions of the simulation software. Not all software packages allow for multiple simultaneous faults. The protection and communication systems at the proximate substations are expected to operate normally, so delayed clearing is not necessary.

Rationale for Requirement R3, Part 3.3.3

The DT believes that requiring documented justification for Faults being selected, without specifying Fault type, allows TOs to determine on a location-by-location basis what is a credible high-severity scenario for a physical attack and furthermore how to appropriately model the associated stability simulations. The DT also believes that a single justification may be used for multiple locations. Requirement 3 Part 3.3.3 allows the TOs to determine the type of fault with documented justification. If a fault type and justification is relevant to multiple Transmission Stations or Transmission Substations, there is no need to repeatedly document the same justification.

Rationale for Requirement R3, Part 3.3.4

Each simulation should ~~also~~ include the removal of all Elements that Protection Systems and other controls are expected to automatically disconnect for the event. After the prior loss of communication and Protection Systems at the applicable Transmission station or Transmission substation, other Protection Systems should operate as expected for the event considered. The accurate simulation of Protection System actions is essential for correctly identifying the risk of instability, uncontrolled separation, or Cascading within an Interconnection.

Rationale for Requirement R3, Part 3.3.5

While there are commonly used generic clearing times for remote clearing that are consistent across the industry, actual clearing times can be shorter or longer depending on conditions and design considerations at an individual ~~Transmission Owner~~TO. The difference of a few cycles can have a

significant impact on the transient behavior of generating units, therefore, it is required that the risk analysis use actual or more conservative clearing ~~time~~times.

Rationale for Requirement R4

Joint ownership of Transmission substations and Transmission stations was discussed in the Guidelines and Technical Basis of previous versions of the CIP-014-3 standard, but ~~the needed prescription on this issue was missing from~~because ownership was not addressed in the standard language~~. Because~~, the CIP-014-4 Risk Assessment Refinement SAR ~~calls for~~required clarification ~~regarding~~which resulted in the new requirement R4. TOs that have applicable jointly owned Transmission substations and Transmission stations ~~of differing ownership, this section was clarified in Requirement R4.~~ should coordinate and document their individual and joint responsibilities for CIP-014-4 Rquirements R3 and R5. TOs should be able to demonstrate sole or joint ownership through one-line diagrams with ownership demarcations and/or a letter of attestation stating which stations are solely or jointly owned.

Rationale for Requirement R5

An objective of the CIP-014-3 Risk Assessment Refinement SAR was to align study periods, frequency of studies, and the powerflow models used for the studies. A 36-month periodicity was chosen for the Requirement R5 risk assessment to reduce the periodicity options from previous versions of the standard. Additionally, a single study periodicity is more easily aligned with project in-service date considerations and model choices. As called for in Project Scope item 3 of the CIP-014-3 Risk Assessment Refinement SAR, the risk assessment must comply with the methodology developed in Requirement R3, so this language was explicitly added to Requirement R5.

~~Transmission Owners~~TOs shall review and, if necessary, update the list of applicable Transmission station(s) ~~or~~ and Transmission substation(s) per Attachment 1 at least once every 36 months. The list of applicable Transmission station(s) or Transmission substation(s) shall include existing or planned to be in service within 36 months Transmission station(s) and Transmission substation(s). The 36-month cycle for updating the list of applicable Transmission station(s) or Transmission substation(s) per Attachment 1 aligns with the annual cycle for performing Planning Assessments per NERC Standard TPL-001. The 36-month risk assessment study cycle aligns with the 36-month planned-to-be-in-service date.

In addition to the performance of the risk assessment using Transmission station(s) and Transmission substation(s) identified in Requirement R1, any proximate Transmission station(s) and Transmission substation(s) identified in Requirement R2 should also be included in the risk assessment. Furthermore, any Transmission station(s) and Transmission substation(s) assessed due to having been identified per Requirement R1 should also be run as part of a proximate Transmission station(s) and Transmission substation(s) group per Requirement R2 if such an identification is made.

Rationale for Requirement R5, Part 5.1

If a ~~Transmission Owner~~TO performs a steady state analysis and identifies a Transmission station or substation that, if rendered inoperable or damaged, could result in instability, uncontrolled separation, or Cascading within an Interconnection, then dynamic analysis is not required for that Transmission station or substation. If a ~~Transmission Owner~~TO performs a dynamic analysis and identifies a Transmission

station or substation that, if rendered inoperable or damaged, could result in instability, uncontrolled separation, or Cascading within an Interconnection, then steady state analysis is not required for that Transmission station or substation.

Rationale for Requirement R5, Part 5.2

The intent of this Requirement is that ~~Transmission Owners~~TOs do not have to reassess already identified and protected Transmission stations or substations (Requirement R5.3 and Requirements R7 through R10 still apply to those Transmission stations or substations). A new risk assessment will need to be performed if the ~~Transmission owner~~TO wishes to determine whether or not a Transmission station or substation can be removed from identification and protection as outlined in Requirement R7.1.

Rationale for Requirement R5, Part 5.3

Identification of Primary Control Centers: After completing the risk assessment under Requirement R5 and verified under Requirement R6, it is important to additionally identify the primary control center that operationally controls each Transmission station or Transmission substation, that if rendered inoperable or damaged could result in instability, uncontrolled separation, or Cascading within an Interconnection. A primary control center "operationally controls" a Transmission station or Transmission substation when the control center's electronic actions can cause direct physical actions at the identified Transmission station and Transmission substation, such as opening a breaker.

Rationale for Implementation Plan

~~The Drafting Team~~In developing the Implementation Plan, the DT has determined that 24 calendar months for the CIP-014-4 implementation plan would allow adequate time for ~~Transmission Owners~~TOs and ~~Transmission Operators~~TOPs to determine applicability, develop criteria, write or revise methodologies, perform assessments, and procure unaffiliated third parties for risk assessment verification (which some ~~Transmission Owners~~TOs have performed concurrently with their risk assessment analyses.

Furthermore, given a) FERC's sense of urgency stated in their original Order to revise CIP-014 (Docket No. RD23-2-000, issued December 15, 2022), b) the findings of NERC's report to FERC on April 14, 2023 (Evaluation of the Physical Security Reliability Standard and Physical Security Attacks to the Bulk-Power System), and c) the designation of Project 2023-06 as High Priority, the DT has determined that an Implementation Plan schedule of greater than 24 calendar months would not be responsive to FERC's concerns with sufficient urgency, and thus 24 calendar months is an appropriate timeframe. While the DT understands the time and resources required of entities to respond to this Implementation Plan, the DT believes that 24 calendar months properly balances the need to address the reliability risk and the time needed by entities to determine applicability, develop criteria, write or revise methodologies, perform assessments, and procure unaffiliated third parties for risk assessment verification.

CIP-014-4 Flowchart

The flowchart is a concise outline that guides through the steps for completing the risk assessment at least once every 36 calendar months, based on the Applicability in Attachment 1 and Requirements R1-R5.

(Modified graphics)

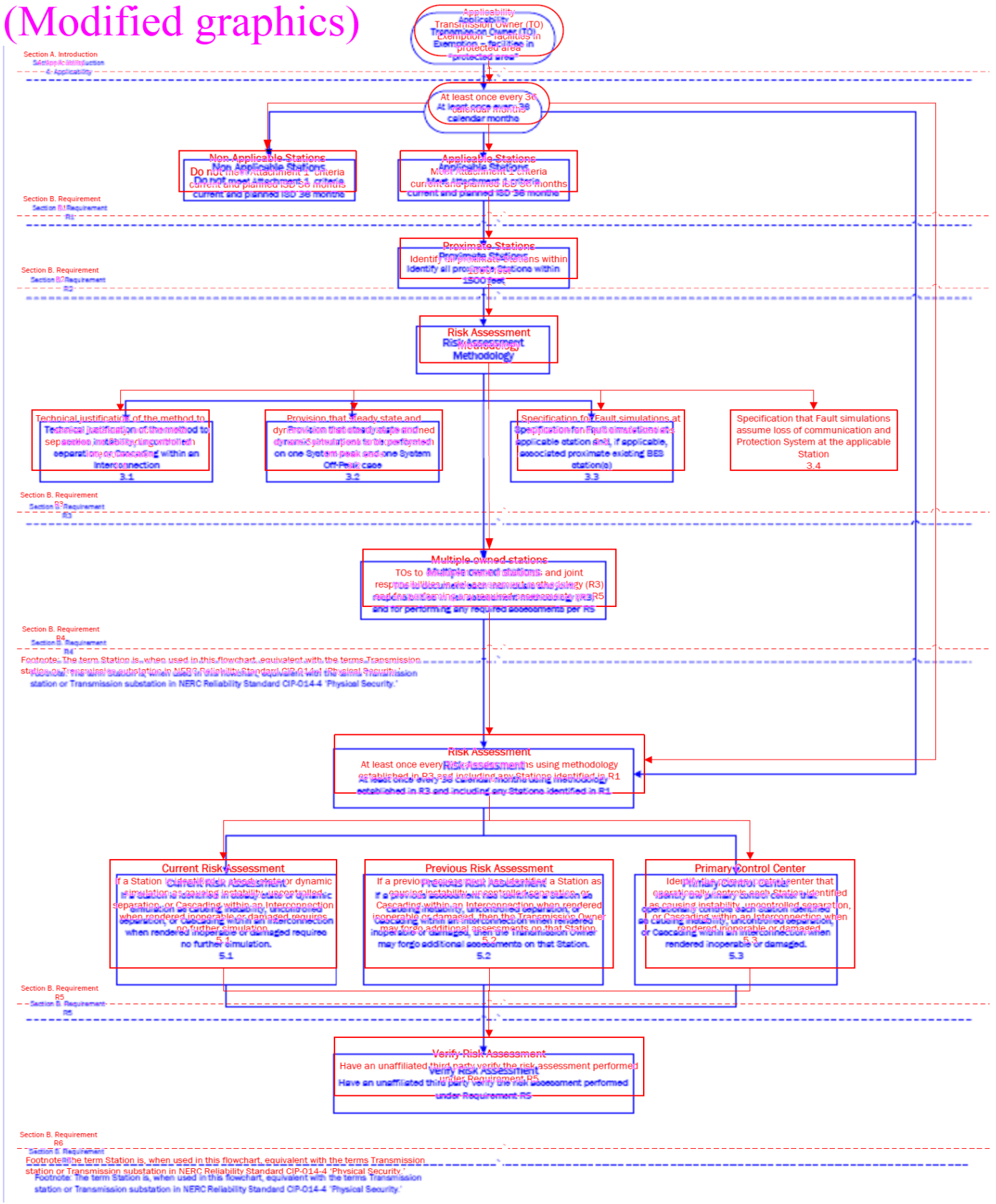

Technical Rationale for Reliability Standard CIP-014-3

This section contains a "cut and paste" of the former Guidelines and Technical Basis (GTB) as-is of from CIP-014-3 standard to preserve any historical references. No modifications have been made.

Requirement R2 (This is Requirement R6 in CIP-014-4)
This requirement specifies verification of the risk assessment performed under Requirement R1 by an entity other than the owner or operator of the Requirement R1 risk assessment.

A verification of the risk assessment by an unaffiliated third party, as specified in Requirement R2, could consist of:

1. Certifying that the Requirement R1 risk assessment considers the Transmission stations and Transmission substations identified in Applicability Section 4.1.1.
2. Review of the model used to conduct the risk assessment to ensure it contains sufficient system topology to identify Transmission stations and Transmission substations that if rendered inoperable or damaged could cause instability, uncontrolled separation, or Cascading within an Interconnection.
3. Review of the Requirement R1 risk assessment methodology.

This requirement provides the flexibility for a Transmission Owner to select from unaffiliated registered and non-registered entities with transmission planning or analysis experience to perform the verification of the Requirement R1 risk assessment. The term unaffiliated means that the selected verifying entity cannot be a corporate affiliate (*i.e.,* the verifying or third party reviewer cannot be an entity that corporately controls, is controlled by or is under common control with, the Transmission Owner). The verifying entity also cannot be a division of the Transmission Owner that operates as a functional unit.

The prohibition on registered entities using a corporate affiliate to conduct the verification, however, does not prohibit a governmental entity (e.g., a city, a municipality, a U.S. federal power marketing agency, or any other political subdivision of U.S. or Canadian federal, state, or provincial governments) from selecting as the verifying entity another governmental entity within the same political subdivision. For instance, a U.S. federal power marketing agency may select as its verifier another U.S. federal agency to conduct its verification so long as the selected entity has transmission planning or analysis experience. Similarly, a Transmission Owner owned by a Canadian province can use a separate agency of that province to perform the verification. The verifying entity, however, must still be a third party and cannot be a division of the registered entity that operates as a functional unit.

Requirement R2 also provides that the "verification may occur concurrent with or after the risk assessment performed under Requirement R1." This provision is designed to provide the Transmission Owner the flexibility to work with the verifying entity throughout (*i.e.,* concurrent with) the risk assessment, which for some Transmission Owners may be more efficient and effective. In other words, a Transmission Owner could collaborate with their unaffiliated verifying entity to perform the risk assessment under Requirement R1 such that both Requirement R1 and Requirement R2 are satisfied

concurrently. The intent of Requirement R2 is to have an entity other than the owner or operator of the facility to be involved in the risk assessment process and have an opportunity to provide input. Accordingly, Requirement R2 is designed to allow entities the discretion to have a two-step process, where the Transmission Owner performs the risk assessment and subsequently has a third party review that assessment, or a one-step process, where the entity collaborates with a third party to perform the risk assessment.

Characteristics to consider in selecting a third party reviewer could include:

- Registered Entity with applicable planning and reliability functions.
- Experience in power system studies and planning.
- The entity's understanding of the MOD standards, TPL standards, and facility ratings as they pertain to planning studies.
- The entity's familiarity with the Interconnection within which the Transmission Owner is located.

With respect to the requirement that Transmission owners develop and implement procedures for protecting confidential and sensitive information, the Transmission Owner could have a method for identifying documents that require confidential treatment. One mechanism for protecting confidential or sensitive information is to prohibit removal of sensitive or confidential information from the Transmission Owner's site. Transmission Owners could include such a prohibition in a non-disclosure agreement with the verifying entity.

A Technical feasibility study is not required in the Requirement R2 documentation of the technical basis for not modifying the identification in accordance with the recommendation.

On the issue of the difference between a verifier in Requirement R2 and a reviewer in Requirement R6, the SDT indicates that the verifier will confirm that the risk assessment was completed in accordance with Requirement R1, including the number of Transmission stations and substations identified, while the reviewer in Requirement R6 is providing expertise on the manner in which the evaluation of threats was conducted in accordance with Requirement R4, and the physical security plan in accordance with Requirement R5. In the latter situation there is no verification of a technical analysis, rather an application of experience and expertise to provide guidance or recommendations, if needed.

Parts 2.4 and 6.4 require the entities to have procedures to protect the confidentiality of sensitive or confidential information. Those procedures may include the following elements:

1. Control and retention of information on site for third party verifiers/reviewers.
2. Only "need to know" employees, etc., get the information.
3. Marking documents as confidential
4. Securely storing and destroying information when no longer needed.

5. Not releasing information outside the entity without, for example, General Counsel sign-off.

Requirement R3 (This is now Requirement R7 in CIP-014-4)
Some Transmission Operators will have obligations under this standard for certain primary control centers. Those obligations, however, are contingent upon a Transmission Owner first completing the risk assessment specified by Requirement R1 and the verification specified by Requirement R2. Requirement R3 is intended to ensure that a Transmission Operator that has operational control of a primary control center identified in Requirement R1 receive notice so that the Transmission Operator may fulfill the rest of the obligations required in Requirements R4 through R6. Since the timing obligations in Requirements R4 through R6 are based upon completion of Requirement R2, the Transmission Owner must also include within the notice the date of completion of Requirement R2. Similarly, the Transmission Owner must notify the Transmission Operator of any removals from identification that result from a subsequent risk assessment under Requirement R1 or as a result of the verification process under Requirement R2.

Requirement R4 (This is now Requirement R8 in CIP-014-4)
This requirement requires owners and operators of facilities identified by the Requirement R1 risk assessment and that are verified under Requirement R2 to conduct an assessment of potential threats and vulnerabilities to those Transmission stations, Transmission substations, and primary control centers using a tailored evaluation process. Threats and vulnerabilities may vary from facility to facility based on any number of factors that include, but are not limited to, location, size, function, existing physical security protections, and attractiveness as a target.

In order to effectively conduct a threat and vulnerability assessment, the asset owner may be the best source to determine specific site vulnerabilities, but current and evolving threats may best be determined by others in the intelligence or law enforcement communities. A number of resources have been identified in the standard, but many others exist and asset owners are not limited to where they may turn for assistance. Additional resources may include state or local fusion centers, U.S. Department of Homeland Security, Federal Bureau of Investigations (FBI), Public Safety Canada, Royal Canadian Mounted Police, and InfraGard chapters coordinated by the FBI.

The Responsible Entity is required to take a number of factors into account in Parts 4.1 to 4.3 in order to make a risk-based evaluation under Requirement R4.

To assist in determining the current threat for a facility, the prior history of attacks on similarly protected facilities should be considered when assessing probability and likelihood of occurrence at the facility in question.

Resources that may be useful in conducting threat and vulnerability assessments include:

- NERC Security Guideline for the Electricity Sector: Physical Security.
- NERC Security Guideline: Physical Security Response.

- ASIS International General Risk Assessment Guidelines.
- ASIS International Facilities Physical Security Measure Guideline.
- ASIS International Security Management Standard: Physical Asset Protection.
- Whole Building Design Guide - Threat/Vulnerability Assessments.

Requirement R5 (This is now Requirement R9 in CIP-014-4)
This requirement specifies development and implementation of a security plan(s) designed to protect against attacks to the facilities identified in Requirement R1 based on the assessment performed under Requirement R4.

Requirement R5 specifies the following attributes for the physical security plan:

- *Resiliency or security measures designed collectively to deter, detect, delay, assess, communicate, and respond to potential physical threats and vulnerabilities identified during the evaluation conducted in Requirement R4.*

  Resiliency may include, among other things:

  a. System topology changes,

  b. Spare equipment,

  c. Construction of a new Transmission station or Transmission substation.

  While most security measures will work together to collectively harden the entire site, some may be allocated to protect specific critical components. For example, if protection from gunfire is considered necessary, the entity may only install ballistic protection for critical components, not the entire site.

- *Law enforcement contact and coordination information.*

  Examples of such information may be posting 9-1-1 for emergency calls and providing substation safety and familiarization training for local and federal law enforcement, fire department, and Emergency Medical Services.

- *A timeline for executing the physical security enhancements and modifications specified in the physical security plan.*

  Entities have the flexibility to prioritize the implementation of the various resiliency or security enhancements and modifications in their security plan according to risk, resources, or other factors. The requirement to include a timeline in the physical security plan for executing the actual physical security enhancements and modifications does not also require that the enhancements and modifications be completed within 120 days. The actual timeline may extend beyond the 120 days, depending on the amount of work to be completed.

- *Provisions to evaluate evolving physical threats, and their corresponding security measures, to the Transmission station(s), Transmission substation(s), or primary control center(s).*

A registered entity's physical security plan should include processes and responsibilities for obtaining and handling alerts, intelligence, and threat warnings from various sources. Some of these sources could include the ERO, ES-ISAC, and US and/or Canadian federal agencies. This information should be used to reevaluate or consider changes in the security plan and corresponding security measures of the security plan found in R5.

Incremental changes made to the physical security plan prior to the next required third party review do not require additional third party reviews.

Requirement R6 (This is now Requirement R10 in CIP-014-4)

This requirement specifies review by an entity other than the Transmission Owner or Transmission Operator with appropriate expertise for the evaluation performed according to Requirement R4 and the security plan(s) developed according to Requirement R5. As with Requirement R2, the term unaffiliated means that the selected third party reviewer cannot be a corporate affiliate (*i.e.,* the third party reviewer cannot be an entity that corporately controls, is controlled by or is under common control with, the Transmission Operator). A third party reviewer also cannot be a division of the Transmission Operator that operates as a functional unit.

As noted in the guidance for Requirement R2, the prohibition on registered entities using a corporate affiliate to conduct the review, however, does not prohibit a governmental entity from selecting as the third party reviewer another governmental entity within the same political subdivision. For instance, a city or municipality may use its local enforcement agency, so long as the local law enforcement agency satisfies the criteria in Requirement R6. The third party reviewer, however, must still be a third party and cannot be a division of the registered entity that operates as a functional unit.

The Responsible Entity can select from several possible entities to perform the review:

- *An entity or organization with electric industry physical security experience and whose review staff has at least one member who holds either a Certified Protection Professional (CPP) or Physical Security Professional (PSP) certification.*

  In selecting CPP and PSP for use in this standard, the SDT believed it was important that if a private entity such as a consulting or security firm was engaged to conduct the third party review, they must tangibly demonstrate competence to conduct the review. This includes electric industry physical security experience and either of the premier security industry certifications sponsored by ASIS International. The ASIS certification program was initiated in 1977, and those that hold the CPP certification are board certified in security management. Those that hold the PSP certification are board certified in physical security.

- *An entity or organization approved by the ERO.*
- *A governmental agency with physical security expertise.*
- *An entity or organization with demonstrated law enforcement, government, or military physical security expertise.*

As with the verification under Requirement R2, Requirement R6 provides that the "review may occur concurrently with or after completion of the evaluation performed under Requirement R4 and the security plan development under Requirement R5." This provision is designed to provide applicable Transmission Owners and Transmission Operators the flexibility to work with the third party reviewer throughout (*i.e.,* concurrent with) the evaluation performed according to Requirement R4 and the security plan(s) developed according to Requirement R5, which for some Responsible Entities may be more efficient and effective. In other words, a Transmission Owner or Transmission Operator could collaborate with their unaffiliated third party reviewer to perform an evaluation of potential threats and vulnerabilities (Requirement R4) and develop a security plan (Requirement R5) to satisfy Requirements R4 through R6 simultaneously. The intent of Requirement R6 is to have an entity other than the owner or operator of the facility to be involved in the Requirement R4 evaluation and the development of the Requirement R5 security plans and have an opportunity to provide input on the evaluation and the security plan. Accordingly, Requirement R6 is designed to allow entities the discretion to have a two-step process, where the Transmission Owner performs the evaluation and develops the security plan itself and then has a third party review that assessment, or a one-step process, where the entity collaborates with a third party to perform the evaluation and develop the security plan.

Rationale for Attachment 1

The DT moved the applicability language from CIP-014-3 to Attachment 1 to make the standard easier to read.

The purpose of Reliability Standard CIP-014 is to protect Transmission stations and Transmission substations, and their associated primary control centers that if rendered inoperable or damaged as a result of a physical attack could result in instability, uncontrolled separation, or Cascading within an Interconnection. To properly include those entities that own or operate such Facilities, the Reliability Standard CIP-014 first applies to Transmission Owners that own Transmission Facilities that meet the specific criteria in Applicability Section 4.1.1.1 through 4.1.1.4. The Facilities described in Applicability Section 4.1.1.1 through 4.1.1.4 mirror those Transmission Facilities that meet the bright line criteria for "Medium Impact" Transmission Facilities under Attachment 1 of Reliability Standard CIP-002-5.1. Each Transmission Owner that owns Transmission Facilities that meet the criteria in Section 4.1.1.1 through 4.1.1.4 is required to perform a risk assessment as specified in Requirement R1 to identify its Transmission stations and Transmission substations, and their associated primary control centers, that if rendered inoperable or damaged as a result of a physical attack could result in instability, uncontrolled separation, or Cascading within an Interconnection. The Standard Drafting Team (SDT) expects this population will be small and that many Transmission Owners that meet the applicability of this standard will not actually identify any such Facilities. Only those Transmission Owners with Transmission stations or Transmission substations identified in the risk assessment (and verified under Requirement R2) have performance obligations under Requirements R3 through R6.

This standard also applies to Transmission Operators. A Transmission Operator's obligations under the standard, however, are only triggered if the Transmission Operator is notified by an applicable Transmission Owner under Requirement R3 that the Transmission Operator operates a primary control center that operationally controls a Transmission station(s) or Transmission substation(s) identified in the Requirement R1 risk assessment. A primary control center operationally controls a Transmission station

or Transmission substation when the control center's electronic actions can cause direct physical action at the identified Transmission station or Transmission substation, such as opening a breaker, as opposed to a control center that only has information from the Transmission station or Transmission substation and must coordinate direct action through another entity. Only Transmission Operators who are notified that they have primary control centers under this standard have performance obligations under Requirements R4 through R6. In other words, primary control center for purposes of this Standard is the control center that the Transmission Owner or Transmission Operator, respectively, uses as its primary, permanently-manned site to physically operate a Transmission station or Transmission substation that is identified in Requirement R1 and verified in Requirement R2. Control centers that provide back-up capability are not applicable, as they are a form of resiliency and intentionally redundant.

The SDT considered several options for bright line criteria that could be used to determine applicability and provide an initial threshold that defines the set of Transmission stations and Transmission substations that would meet the directives of the FERC order on physical security (*i.e.*, those that could cause instability, uncontrolled separation, or Cascading within an Interconnection). The SDT determined that using the criteria for Medium Impact Transmission Facilities in Attachment 1 of CIP-002-5.1 would provide a conservative threshold for defining which Transmission stations and Transmission substations must be included in the risk assessment in Requirement R1 of CIP-014. Additionally, the SDT concluded that using the CIP-002-5.1 Medium Impact criteria was appropriate because it has been approved by stakeholders, NERC, and FERC, and its use provides a technically sound basis to determine which Transmission Owners should conduct the risk assessment. As described in CIP-002-5.1, the failure of a Transmission station or Transmission substation that meets the Medium Impact criteria could have the capability to result in exceeding one or more Interconnection Reliability Operating Limits (IROLs). The SDT understands that using this bright line criteria to determine applicability may require some Transmission Owners to perform risk assessments under Requirement R1 that will result in a finding that none of their Transmission stations or Transmission substations would pose a risk of instability, uncontrolled separation, or Cascading within an Interconnection. However, the SDT determined that higher bright lines could not be technically justified to ensure inclusion of all Transmission stations and Transmission substations, and their associated primary control centers that, if rendered inoperable or damaged as a result of a physical attack could result in instability, uncontrolled separation, or Cascading within an Interconnection. Further guidance and technical basis for the bright line criteria for Medium Impact Facilities can be found in the Guidelines and Technical Basis section of CIP-002-5.1.

Additionally, the SDT determined that it was not necessary to include Generator Operators and Generator Owners in the Reliability Standard. First, Transmission stations or Transmission substations interconnecting generation facilities are considered when determining applicability. Transmission Owners will consider those Transmission stations and Transmission substations that include a Transmission station on the high side of the Generator Step-up transformer (GSU) using Applicability Section 4.1.1.1 and 4.1.1.2. As an example, a Transmission station or Transmission substation identified as a Transmission Owner facility that interconnects generation will be subject to the Requirement R1 risk assessment if it operates at 500kV or greater or if it is connected at 200 kV – 499kV to three or more other Transmission stations or Transmission substations and has an "aggregate weighted value" exceeding 3000 according to the table in Applicability Section 4.1.1.2. Second, the Transmission analysis or analyses conducted under

Requirement R1 should take into account the impact of the loss of generation connected to applicable Transmission stations or Transmission substations. Additionally, the FERC order does not explicitly mention generation assets and is reasonably understood to focus on the most critical Transmission Facilities. The diagram below shows an example of a station.

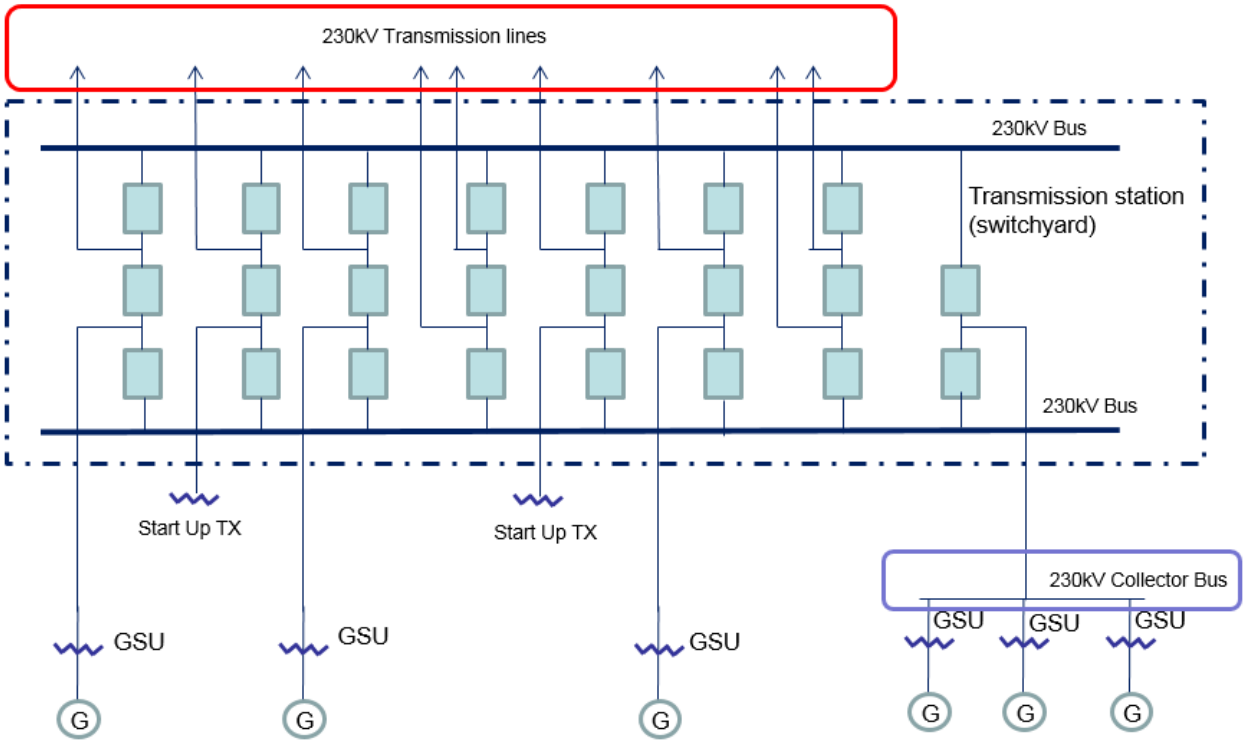

Also, the SDT uses the phrase "Transmission stations or Transmission substations" to recognize the existence of both stations and substations. Many entities in industry consider a substation to be a location with physical borders (i.e. fence, wall, etc.) that contains at least an autotransformer. Locations also exist that do not contain autotransformers, and many entities in industry refer to those locations as stations (switching stations or switchyards). Therefore, the SDT chose to use both "station" and "substation" to refer to the locations where groups of Transmission Facilities exist.

On the issue of joint ownership, the SDT recognizes that this issue is not unique to CIP-014, and expects that the applicable Transmission Owners and Transmission Operators will develop memorandums of understanding, agreements, Coordinated Functional Registrations, or procedures, etc., to designate responsibilities under CIP-014 when joint ownership is at issue, which is similar to what many entities have completed for other Reliability Standards.

The language contained in the applicability section regarding the collector bus is directly copied from CIP-002-5.1, Attachment 1, and has no additional meaning within the CIP-014 standard.

Timeline

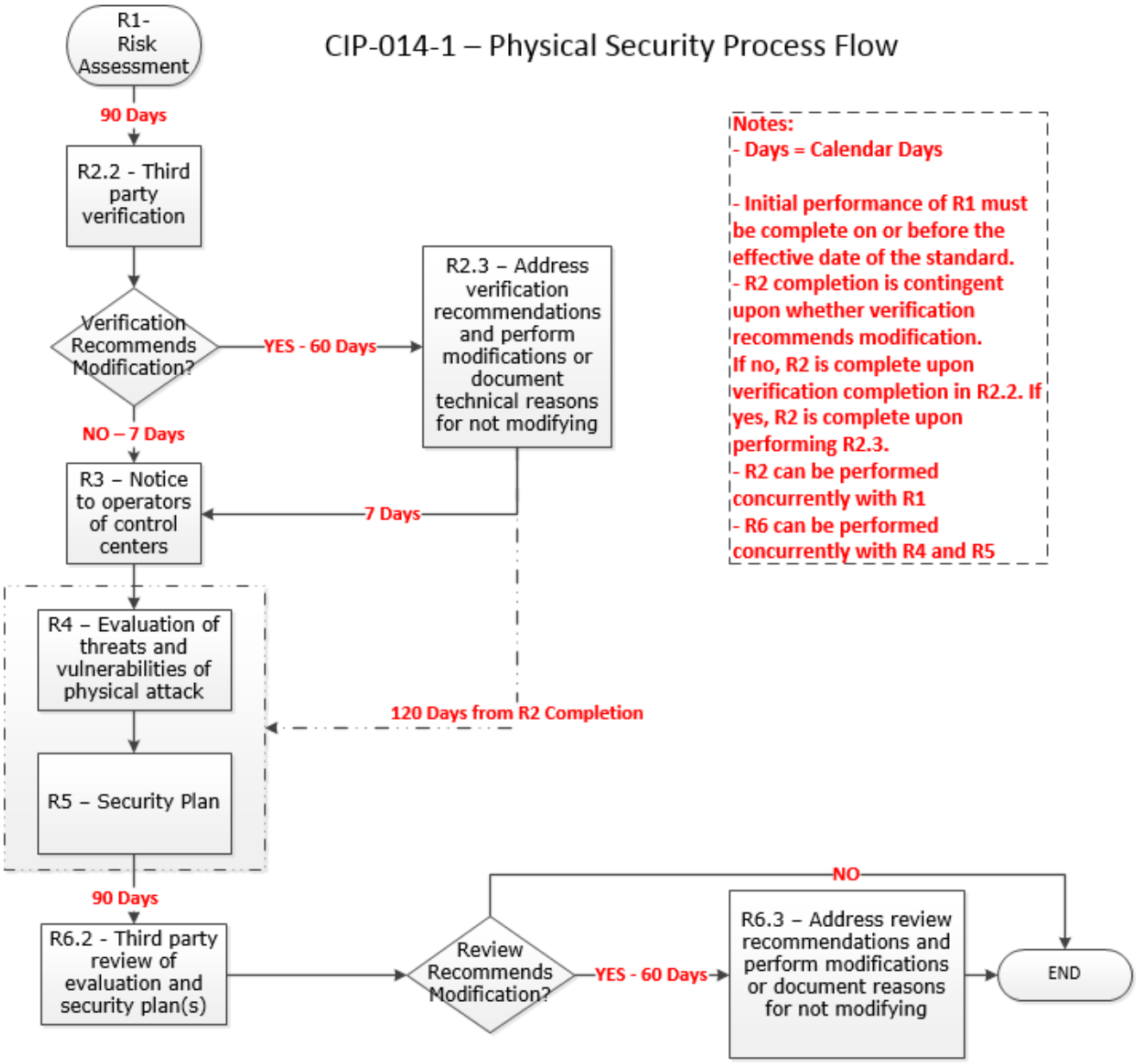
CIP-014-1 – Physical Security Process Flow
R1- Risk Assessment
90 Days
R2.2 - Third party verification
Verification Recommends Modification?
YES - 60 Days
R2.3 – Address verification recommendations and perform modifications or document technical reasons for not modifying
NO – 7 Days
R3 – Notice to operators of control centers
7 Days
R4 – Evaluation of threats and vulnerabilities of physical attack
120 Days from R2 Completion
R5 – Security Plan
90 Days
R6.2 - Third party review of evaluation and security plan(s)
Review Recommends Modification?
YES - 60 Days
NO
R6.3 – Address review recommendations and perform modifications or document reasons for not modifying
END
Notes:
- Days = Calendar Days
- Initial performance of R1 must be complete on or before the effective date of the standard.
- R2 completion is contingent upon whether verification recommends modification. If no, R2 is complete upon verification completion in R2.2. If yes, R2 is complete upon performing R2.3.
- R2 can be performed concurrently with R1
- R6 can be performed concurrently with R4 and R5

Rationale

During development of this standard, text boxes were embedded within the standard to explain the rationale for various parts of the standard. Upon BOT approval, the text from the rationale text boxes was moved to this section.

Rationale for Requirement R1 (This is for the old Requirement R1 in CIP-014-3):
This requirement meets the FERC directive from paragraph 6 of its March 7, 2014 order on physical security to perform a risk assessment to identify which facilities if rendered inoperable or damaged could impact an Interconnection through instability, uncontrolled separation, or cascading failures. The requirement is not intended to bring within the scope of the standard a Transmission station or Transmission substation unless the applicable Transmission Owner determines through technical studies and analyses based on objective analysis, technical expertise, operating experience and experienced judgment that the loss of such facility would have a critical impact on the operation of the Interconnection in the event the asset is rendered inoperable or damaged. In the November 20, 2014 Order, FERC reiterated that "only an instability that has a "critical impact on the operation of the interconnection" warrants finding that the facility causing the instability is critical under Requirement R1." The Transmission Owner may determine the criteria for critical impact by considering, among other criteria, any of the following:

- Criteria or methodology used by Transmission Planners or Planning Coordinators in TPL-001-4, Requirement R6
- NERC EOP-004-2 reporting criteria
- Area or magnitude of potential impact

Requirement R1 also meets the FERC directive for periodic reevaluation of the risk assessment by requiring the risk assessment to be performed every 30 months (or 60 months for an entity that has not identified in a previous risk assessment any Transmission stations or Transmission substations that if rendered inoperable or damaged could result in instability, uncontrolled separation, or Cascading within an Interconnection).

After identifying each Transmission station and Transmission substation that meets the criteria in Requirement R1, it is important to additionally identify the primary control center that operationally controls that Transmission station or Transmission substation (*i.e.,* the control center whose electronic actions can cause direct physical actions at the identified Transmission station and Transmission substation, such as opening a breaker, compared to a control center that only has the ability to monitor the Transmission station and Transmission substation and, therefore, must coordinate direct physical action through another entity).

Rationale for Requirement R2 (This is now Requirement R6 in CIP-014-4):
This requirement meets the FERC directive from paragraph 11 in the order on physical security requiring verification by an entity other than the owner or operator of the risk assessment performed under Requirement R1.

This requirement provides the flexibility for a Transmission Owner to select registered and non-registered entities with transmission planning or analysis experience to perform the verification of the Requirement R1 risk assessment. The term "unaffiliated" means that the selected verifying entity cannot be a corporate affiliate (*i.e.*, the verifying entity cannot be an entity that controls, is controlled by, or is under common control with, the Transmission owner). The verifying entity also cannot be a division of the Transmission Owner that operates as a functional unit. The term "unaffiliated" is not intended to prohibit a governmental entity from using another government entity to be a verifier under Requirement R2.

Requirement R2 also provides the Transmission Owner the flexibility to work with the verifying entity throughout the Requirement R1 risk assessment, which for some Transmission Owners may be more efficient and effective. In other words, a Transmission Owner could coordinate with their unaffiliated verifying entity to perform a Requirement R1 risk assessment to satisfy both Requirement R1 and Requirement R2 concurrently.

Planning Coordinator is a functional entity listed in Part 2.1. The Planning Coordinator and Planning Authority are the same entity as shown in the NERC Glossary of Terms Used in NERC Reliability Standards.

Rationale for Requirement R3 (This is now Requirement R7 in CIP-014-4):
Some Transmission Operators will have obligations under this standard for certain primary control centers. Those obligations, however, are contingent upon a Transmission Owner first identifying which Transmission stations and Transmission substations meet the criteria specified by Requirement R1, as verified according to Requirement R2. This requirement is intended to ensure that a Transmission Operator that has operational control of a primary control center identified in Requirement R1, Part 1.2 of a Transmission station or Transmission substation verified according to Requirement R2 receives notice of such identification so that the Transmission Operator may timely fulfill its resulting obligations under Requirements R4 through R6. Since the timing obligations in Requirements R4 through R6 are based upon completion of Requirement R2, the Transmission Owner must also include notice of the date of completion of Requirement R2. Similarly, the Transmission Owner must notify the Transmission Operator of any removals from identification that result from a subsequent risk assessment under Requirement R1 or the verification process under Requirement R2.

Rationale for Requirement R4 (This is now Requirement R8 in CIP-014-4):
This requirement meets the FERC directive from paragraph 8 in the order on physical security that the reliability standard must require tailored evaluation of potential threats and vulnerabilities to facilities identified in Requirement R1 and verified according to Requirement R2. Threats and vulnerabilities may vary from facility to facility based on factors such as the facility's location, size, function, existing protections, and attractiveness of the target. As such, the requirement does not mandate a one-size-fits-all approach but requires entities to account for the unique characteristics of their facilities.

Requirement R4 does not explicitly state when the evaluation of threats and vulnerabilities must occur or be completed. However, Requirement R5 requires that the entity's security plan(s), which is dependent on the Requirement R4 evaluation, must be completed within 120 calendar days following completion of Requirement R2. Thus, an entity has the flexibility when to complete the Requirement R4 evaluation,

provided that it is completed in time to comply with the requirement in Requirement R5 to develop a physical security plan 120 calendar days following completion of Requirement R2.

Rationale for Requirement R5 (This is now Requirement R9 in CIP-014-4):
This requirement meets the FERC directive from paragraph 9 in the order on physical security requiring the development and implementation of a security plan(s) designed to protect against attacks to the facilities identified in Requirement R1 based on the assessment performed under Requirement R4.

Rationale for Requirement R6 (This is now Requirement R10 in CIP-014-4):
This requirement meets the FERC directive from paragraph 11 in the order on physical security requiring review by an entity other than the owner or operator with appropriate expertise of the evaluation performed according to Requirement R4 and the security plan(s) developed according to Requirement R5.

As with the verification required by Requirement R2, Requirement R6 provides Transmission Owners and Transmission Operators the flexibility to work with the third party reviewer throughout the Requirement R4 evaluation and the development of the Requirement R5 security plan(s). This would allow entities to satisfy their obligations under Requirement R6 concurrent with the satisfaction of their obligations under Requirements R4 and R5.

Standards Announcement

Project 2023-06 CIP-014 Risk Assessment Refinement
CIP-014-4

Be aware that this is a public proceeding, and comments are publicly available upon submission. DO NOT include any CEII or otherwise sensitive information in your comments.

Formal Comment Period Open through May 14, 2026

Now Available

A 45-day formal comment period for draft three of **CIP-014-4 Physical Security**, is open through **8 p.m. Eastern, Thursday, May 14, 2026**.

The drafting team's considerations of the responses received from the previous comment period are reflected in this draft of the standard.

Reminder Regarding Corporate RBB Memberships

Under the NERC Rules of Procedure, each entity and its affiliates is collectively permitted one voting membership per Registered Ballot Body Segment. Each entity that undergoes a change in corporate structure (such as a merger or acquisition) that results in the entity or affiliated entities having more than the one permitted representative in a particular Segment must withdraw the duplicate membership(s) prior to joining new ballot pools or voting on anything as part of an existing ballot pool. Contact ballotadmin@nerc.net to assist with the removal of any duplicate registrations.

Commenting

Use the Standards Balloting and Commenting System (SBS) to submit comments. An unofficial Word version of the comment form is posted on the project page.

- *Contact NERC IT support directly at https://support.nerc.net/ (Monday – Friday, 8 a.m. - 5 p.m. Eastern) for problems regarding accessing the SBS due to a forgotten password, incorrect credential error messages, or system lock-out.*
- *Passwords expire every **6 months** and must be reset.*
- *The SBS **is not** supported for use on mobile devices.*
- *Please be mindful of ballot and comment period closing dates. We ask to **allow at least 48 hours** for NERC support staff to assist with inquiries. Therefore, it is recommended that users try logging into their SBS accounts **prior to the last day** of a comment/ballot period.*

Next Steps

Additional ballots for the standard and Implementation Plan, as well as a non-binding poll of the associated Violation Risk Factors and Violation Severity Levels, will be conducted **May 5 - May 14, 2026**.

For more information on the Standards Development Process, refer to the Standard Processes Manual.

For more information or assistance, please contact **Ben Wu** via email or at **470-542-6882**. Subscribe to this project's observer mailing list by logging into EasyVista using your ERO portal account. Select "Mailing List Requests" at the bottom of the screen, then click "Create Request" under the "Standards Team Lists" section. Specify "Project 2023-06 CIP-014 - Risk Assessment Refinement observer list" in the Description Box.

NOTE: To create an ERO account, go to the ERO Portal and register for a new account.

Reminder
Standards Announcement
Project 2023-06 CIP-014 Risk Assessment Refinement

Additional Ballot and Non-Binding Poll Open through May 14, 2026

Now Available

Additional ballots for the standard and Implementation Plan, as well as a non-binding poll of the associated Violation Risk Factors and Violation Severity Levels are open through **8 p.m. Eastern, Thursday, May 14, 2026.**

The drafting team's considerations of the responses received from the last comment period are reflected in this draft of the standard.

Reminder Regarding Corporate RBB Memberships

Under the NERC Rules of Procedure, each entity and its affiliates is collectively permitted one voting membership per Registered Ballot Body Segment. Each entity that undergoes a change in corporate structure (such as a merger or acquisition) that results in the entity or affiliated entities having more than the one permitted representative in a particular Segment must withdraw the duplicate membership(s) prior to joining new ballot pools or voting on anything as part of an existing ballot pool. Contact ballotadmin@nerc.net to assist with the removal of any duplicate registrations.

Balloting

Members of the ballot pools associated with this project can log in and submit their votes by accessing the Standards Balloting and Commenting System (SBS) here.

Note: Votes cast in previous ballots, will not carry over to additional ballots. It is the responsibility of the registered voter in the ballot pools to place votes again. To ensure a quorum is reached, if you do not want to vote affirmative or negative, cast an abstention.

- *Contact NERC IT support directly at https://support.nerc.net/ (Monday – Friday, 8 a.m. - 5 p.m. Eastern) for problems regarding accessing the SBS due to a forgotten password, incorrect credential error messages, or system lock-out.*
- *Passwords expire every **6 months** and must be reset.*
- *The SBS **is not** supported for use on mobile devices.*
- *Please be mindful of ballot and comment period closing dates. We ask to **allow at least 48 hours** for NERC support staff to assist with inquiries. Therefore, it is recommended that users try logging into their SBS accounts **prior to the last day** of a comment/ballot period.*

Next Steps

The ballot results will be announced and posted on the project page. The drafting team will review all responses received during the comment period and determine the next steps of the project.

For more information on the Standards Development Process, refer to the Standard Processes Manual

For more information or assistance, please contact **Ben Wu** via email or at **470-542-6882**. Subscribe to this project's observer mailing list by logging into EasyVista using your ERO portal account. Select "Mailing List Requests" at the bottom of the screen, then click "Create Request" under the "Standards Team Lists" section. Specify "Project 2023-06 CIP-014 - Risk Assessment Refinement observer list" in the Description Box.

NOTE: To create an ERO account, go to the ERO Portal and register for a new account.

BALLOT RESULTS

Comment: View Comment Results (/CommentResults/Index/387)
Ballot Name: Project 2023-06 CIP-014 Risk Assessment Refinement CIP-014-4 AB 4 ST
Voting Start Date: 5/5/2026 12:01:00 AM
Voting End Date: 5/14/2026 8:00:00 PM
Ballot Type: ST
Ballot Activity: AB
Ballot Series: 4
Total # Votes: 233
Total Ballot Pool: 293
Quorum: 79.52
Quorum Established Date: 5/14/2026 4:23:25 PM
Weighted Segment Value: 79.21

Segment	Ballot Pool	Segment Weight	Affirmative Votes	Affirmative Fraction	Negative Votes w/ Comment	Negative Fraction w/ Comment	Negative Votes w/o Comment	Abstain	No Vote
Segment: 1	85	1	46	0.73	17	0.27	0	8	14
Segment: 2	7	0	0	0	0	0	0	6	1
Segment: 3	67	1	40	0.816	9	0.184	0	4	14
Segment: 4	15	0.5	5	0.5	0	0	0	2	8
Segment: 5	66	1	35	0.778	10	0.222	0	6	15
Segment: 6	46	1	28	0.778	8	0.222	0	5	5
Segment: 7	0	0	0	0	0	0	0	0	0
Segment: 8	0	0	0	0	0	0	0	0	0

© 2026 - NERC Ver 4.2.1.0 Machine Name: ATLVPEROWEB01

Segment	Ballot Pool	Segment Weight	Affirmative Votes	Affirmative Fraction	Negative Votes w/ Comment	Negative Fraction w/ Comment	Negative Votes w/o Comment	Abstain	No Vote
Segment: 9	0	0	0	0	0	0	0	0	0
Segment: 10	7	0.3	2	0.2	1	0.1	0	1	3
Totals:	293	4.8	156	3.802	45	0.998	0	32	60

BALLOT POOL MEMBERS

Show All entries Search: Search

Segment	Organization	Voter	Designated Proxy	Ballot	NERC Memo
1	AEP - AEP Service Corporation	Dennis Sauriol		Affirmative	N/A
1	Allete - Minnesota Power, Inc.	Hillary Creurer	Lori Frisk	Affirmative	N/A
1	Ameren - Ameren Services	Tamara Evey		Affirmative	N/A
1	American Transmission Company, LLC	Amy Wilke		Affirmative	N/A
1	APS - Arizona Public Service Co.	Daniela Atanasovski		Affirmative	N/A
1	Arkansas Electric Cooperative Corporation	Lily Green		None	N/A
1	Associated Electric Cooperative, Inc.	Mark Riley		Affirmative	N/A
1	Austin Energy	Thomas Standifur		Affirmative	N/A

© 2026 - NERC Ver 4.2.1.0 Machine Name: ATLVPEROWEB01

Segment	Organization	Voter	Designated Proxy	Ballot	NERC Memo
1	Balancing Authority of Northern California	Kevin Smith	Tim Kelley	None	N/A
1	BC Hydro and Power Authority	Adrian Andreoiu		Abstain	N/A
1	Berkshire Hathaway Energy - MidAmerican Energy Co.	Thomas Breen		Affirmative	N/A
1	Black Hills Corporation	Trevor Rombough		Affirmative	N/A
1	Bonneville Power Administration	Mai Truong		Negative	Comments Submitted
1	CenterPoint Energy Houston Electric, LLC	Daniela Hammons		Affirmative	N/A
1	Central Iowa Power Cooperative	Kelly Heims		Affirmative	N/A
1	City Utilities of Springfield, Missouri	Michael Buyce		Affirmative	N/A
1	Colorado Springs Utilities	Corey Walker		None	N/A
1	Con Ed - Consolidated Edison Co. of New York	Dermot Smyth		Affirmative	N/A
1	Dairyland Power Cooperative	Karrie Schuldt		Affirmative	N/A
1	Dominion - Dominion Virginia Power	Steven Belle		Affirmative	N/A
1	Duke Energy	Katherine Street		Affirmative	N/A
1	Edison International - Southern California Edison Company	Hayk Zargaryan		Affirmative	N/A
1	Entergy	Brian Lindsey		Affirmative	N/A
1	Evergy	Kevin Frick	Alan Kloster	Affirmative	N/A
1	Eversource Energy	Joshua London		Affirmative	N/A
1	Exelon	Daniel Gacek		Affirmative	N/A

© 2026 - NERC Ver 4.2.1.0 Machine Name: ATLVPEROWEB01

Segment	Organization	Voter	Designated Proxy	Ballot	NERC Memo
1	FirstEnergy - FirstEnergy Corporation	Theresa Ciancio		Affirmative	N/A
1	Georgia Transmission Corporation	Greg Davis	Stephen Stafford	Affirmative	N/A
1	Glencoe Light and Power Commission	Terry Volkmann		Affirmative	N/A
1	Great River Energy	Mark Peterson		None	N/A
1	Hydro One Networks, Inc.	Aditya Menon	Oshara Narangoda	Negative	Comments Submitted
1	Hydro-Quebec (HQ)	Nicolas Turcotte	Chantal Mazza	Affirmative	N/A
1	IDACORP - Idaho Power Company	Sean Steffensen		Abstain	N/A
1	Imperial Irrigation District	Jesus Sammy Alcaraz	Denise Sanchez	Affirmative	N/A
1	International Transmission Company Holdings Corporation	Michael Moltane	Gail Elliott	Negative	Comments Submitted
1	Lakeland Electric	Larry Watt		None	N/A
1	Lincoln Electric System	Josh Johnson		Affirmative	N/A
1	Long Island Power Authority	Isidoro Behar		Negative	Comments Submitted
1	Los Angeles Department of Water and Power	Jonathon Flores		None	N/A
1	Lower Colorado River Authority	Matt Lewis		Affirmative	N/A
1	M and A Electric Power Cooperative	William Price		Affirmative	N/A
1	Manitoba Hydro	Nazra Gladu		Abstain	N/A
1	Minnkota Power Cooperative Inc.	Theresa Allard	Nikki Carson-Marquis	Negative	Comments Submitted
1	Muscatine Power and Water	Andrew Kurriger		Affirmative	N/A

© 2026 - NERC Ver 4.2.1.0 Machine Name: ATLVPEROWEB01

Segment	Organization	Voter	Designated Proxy	Ballot	NERC Memo
1	N.W. Electric Power Cooperative, Inc.	Mark Ramsey		Affirmative	N/A
1	National Grid USA	Jacqueline Ryan		Affirmative	N/A
1	NB Power Corporation	Jeffrey Streifling		Negative	Comments Submitted
1	Nebraska Public Power District	Jamison Cawley		Affirmative	N/A
1	Network and Security Technologies	Nick Lauriat		None	N/A
1	New York Power Authority	Daniel Valle		Negative	Comments Submitted
1	NextEra Energy - Florida Power and Light Co.	Silvia Mitchell		Affirmative	N/A
1	NiSource - Northern Indiana Public Service Co.	Alison Nickells		Negative	Comments Submitted
1	Northeast Missouri Electric Power Cooperative	Brett Douglas		Affirmative	N/A
1	OGE Energy - Oklahoma Gas and Electric Co.	Terri Pyle		Affirmative	N/A
1	Oncor Electric Delivery	Byron Booker	Lucinda Bradshaw	None	N/A
1	OTP - Otter Tail Power Company	Charles Wicklund		Affirmative	N/A
1	Pacific Gas and Electric Company	Marco Rios	Bob Cardle	Negative	Comments Submitted
1	Pedernales Electric Cooperative, Inc.	Bradley Collard		Abstain	N/A
1	Platte River Power Authority	Marissa Archie		Affirmative	N/A
1	Portland General Electric Co.	Brooke Jockin		Abstain	N/A

© 2026 - NERC Ver 4.2.1.0 Machine Name: ATLVPEROWEB01

Segment	Organization	Voter	Designated Proxy	Ballot	NERC Memo
1	PPL Electric Utilities Corporation	Michelle McCartney Longo		Affirmative	N/A
1	PSEG - Public Service Electric and Gas Co.	Karen Arnold		None	N/A
1	Public Utility District No. 1 of Chelan County	Maggie Bravo		Negative	Comments Submitted
1	Public Utility District No. 1 of Snohomish County	Alyssia Rhoads		Negative	Comments Submitted
1	Public Utility District No. 2 of Grant County, Washington	Joanne Anderson		Abstain	N/A
1	Sacramento Municipal Utility District	Wei Shao	Tim Kelley	None	N/A
1	Salt River Project	Laura Somak	Timothy Singh	Negative	Comments Submitted
1	Santee Cooper	Franklin Settle		Abstain	N/A
1	SaskPower	Wayne Guttormson		Abstain	N/A
1	Seattle City Light	Michael Jang		Affirmative	N/A
1	Seminole Electric Cooperative, Inc.	Khang Le		Negative	Comments Submitted
1	Sempra - San Diego Gas and Electric	Mo Derbas		Negative	Comments Submitted
1	Sho-Me Power Electric Cooperative	Oskar Olson		None	N/A
1	Southern Company - Southern Company Services, Inc.	Matt Carden		Affirmative	N/A
1	Southwestern Power Administration	Angela Wheat		Affirmative	N/A
1	Sunflower Electric Power Corporation	Paul Mehlhaff		None	N/A

© 2026 - NERC Ver 4.2.1.0 Machine Name: ATLVPEROWEB01

Segment	Organization	Voter	Designated Proxy	Ballot	NERC Memo
1	Tacoma Public Utilities (Tacoma, WA)	John Merrell	Jennie Wike	Negative	Third-Party Comments
1	Tallahassee Electric (City of Tallahassee, FL)	Scott Langston		Affirmative	N/A
1	Tennessee Valley Authority	David Plumb		Affirmative	N/A
1	Tri-State G and T Association, Inc.	Donna Wood		None	N/A
1	U.S. Bureau of Reclamation	Richard Jackson		Affirmative	N/A
1	Unisource - Tucson Electric Power Co.	Jessica Cordero		Affirmative	N/A
1	VELCO -Vermont Electric Power Company, Inc.	Randall Buswell		None	N/A
1	Western Area Power Administration	Keihen Allen-Kitchen		Negative	Comments Submitted
1	Xcel Energy, Inc.	Eric Barry		Negative	Comments Submitted
2	California ISO	Filipe Coelho		Abstain	N/A
2	Electric Reliability Council of Texas, Inc.	Kennedy Meier		Abstain	N/A
2	ISO New England, Inc.	John Pearson		Abstain	N/A
2	Midcontinent ISO, Inc.	Kirsten Rowley		Abstain	N/A
2	New York Independent System Operator	Gregory Campoli		None	N/A
2	PJM Interconnection, L.L.C.	Thomas Foster	Elizabeth Davis	Abstain	N/A
2	Southwest Power Pool, Inc. (RTO)	Joshua Phillips	Mia Wilson	Abstain	N/A
3	AEP	Jodi Yeary		Affirmative	N/A
3	Ameren - Ameren Services	David Jendras Sr	Nick Leathers	Affirmative	N/A
3	APS - Arizona Public Service Co.	Jessica Lopez		Affirmative	N/A

© 2026 - NERC Ver 4.2.1.0 Machine Name: ATLVPEROWEB01

Segment	Organization	Voter	Designated Proxy	Ballot	NERC Memo
3	Arkansas Electric Cooperative Corporation	Ayslynn Mcavoy		Abstain	N/A
3	Associated Electric Cooperative, Inc.	Todd Bennett		Affirmative	N/A
3	Austin Energy	Lovita Griffin		None	N/A
3	Avista - Avista Corporation	Robert Follini		None	N/A
3	BC Hydro and Power Authority	Cameron Chung		Abstain	N/A
3	Berkshire Hathaway Energy - MidAmerican Energy Co.	Matthew Kloos		None	N/A
3	Black Hills Corporation	Josh Combs		Affirmative	N/A
3	Bonneville Power Administration	Ron Sporseen		Negative	Comments Submitted
3	Buckeye Power, Inc.	Tom Schmidt	Ryan Strom	None	N/A
3	Central Electric Power Cooperative (Missouri)	Adam Weber		Affirmative	N/A
3	City Utilities of Springfield, Missouri	Jessica Morrissey		None	N/A
3	Colorado Springs Utilities	Hillary Dobson		Affirmative	N/A
3	Con Ed - Consolidated Edison Co. of New York	Arman Shiplu		Affirmative	N/A
3	Dominion - Dominion Virginia Power	Matt Bullard		Affirmative	N/A
3	Duke Energy - Florida Power Corporation	Marcelo Pesantez		Affirmative	N/A
3	Edison International - Southern California Edison Company	Todd Garwick		Affirmative	N/A
3	Entergy	James Keele		Affirmative	N/A
3	Evergy	Marcus Moor	Alan Kloster	Affirmative	N/A
3	Eversource Energy	Vicki O'Leary		Affirmative	N/A

© 2026 - NERC Ver 4.2.1.0 Machine Name: ATLVPEROWEB01

Segment	Organization	Voter	Designated Proxy	Ballot	NERC Memo
3	Exelon	Kinte Whitehead		Affirmative	N/A
3	FirstEnergy - FirstEnergy Corporation	Aaron Ghodooshim		Affirmative	N/A
3	Georgia System Operations Corporation	Naresh Latchman		Affirmative	N/A
3	Great River Energy	Joseph Gatten		Affirmative	N/A
3	Imperial Irrigation District	Jorge Gutierrez		None	N/A
3	KAMO Electric Cooperative	Tony Gott		Affirmative	N/A
3	Lincoln Electric System	Sam Christensen		Affirmative	N/A
3	Los Angeles Department of Water and Power	Fausto Serratos		Affirmative	N/A
3	M and A Electric Power Cooperative	Gary Dollins		Affirmative	N/A
3	MEAG Power	Roger Brand	Rebika Yitna	Affirmative	N/A
3	MGE Energy - Madison Gas and Electric Co.	Ken Bartz		Abstain	N/A
3	Muscatine Power and Water	Seth Shoemaker		Affirmative	N/A
3	National Grid USA	Brian Shanahan		Affirmative	N/A
3	Nebraska Public Power District	Kevin Schawang		Affirmative	N/A
3	New York Power Authority	Richard Machado		Negative	Comments Submitted
3	NextEra Energy - Florida Power and Light Co.	Karen Demos		None	N/A
3	NiSource - Northern Indiana Public Service Co.	Steven Taddeucci		Negative	Comments Submitted
3	Northeast Missouri Electric Power Cooperative	Skyler Wiegmann		Affirmative	N/A
3	Northern California Power Agency	Michael Whitney	Chris Carnesi	None	N/A

© 2026 - NERC Ver 4.2.1.0 Machine Name: ATLVPEROWEB01

Segment	Organization	Voter	Designated Proxy	Ballot	NERC Memo
3	NW Electric Power Cooperative, Inc.	Heath Henry		Affirmative	N/A
3	OGE Energy - Oklahoma Gas and Electric Co.	Donald Hargrove		Affirmative	N/A
3	Omaha Public Power District	David Heins		Affirmative	N/A
3	Orlando Utilities Commission	Ballard Mutters		None	N/A
3	OTP - Otter Tail Power Company	Tony Huseby		Affirmative	N/A
3	Pacific Gas and Electric Company	Sandra Ellis	Bob Cardle	Negative	Comments Submitted
3	Platte River Power Authority	Richard Kiess		None	N/A
3	Portland General Electric Co.	Mayra Franco		None	N/A
3	PPL - Louisville Gas and Electric Co.	James Frank		Affirmative	N/A
3	PSEG - Public Service Electric and Gas Co.	Christopher Murphy		None	N/A
3	Public Utility District No. 1 of Chelan County	Joyce Gundry		Negative	Comments Submitted
3	Puget Sound Energy, Inc.	Kelley Sargent		Affirmative	N/A
3	Sacramento Municipal Utility District	Nicole Looney	Tim Kelley	None	N/A
3	Salt River Project	Jennifer Bennett	Timothy Singh	Negative	Comments Submitted
3	Santee Cooper	Marty Watson		Abstain	N/A
3	Seattle City Light	Zenon O'young-Chu		Affirmative	N/A
3	Seminole Electric Cooperative, Inc.	Lewis Snyder		Negative	Comments Submitted
3	Sempra - San Diego Gas and Electric	Bryan Bennett		Negative	Comments Submitted

© 2026 - NERC Ver 4.2.1.0 Machine Name: ATLVPEROWEB01

Segment	Organization	Voter	Designated Proxy	Ballot	NERC Memo
3	Sho-Me Power Electric Cooperative	Jarrod Murdaugh		Affirmative	N/A
3	Snohomish County PUD No. 1	Holly Chaney		Negative	Comments Submitted
3	Southern Company - Alabama Power Company	Joel Dembowski		Affirmative	N/A
3	Southern Indiana Gas and Electric Co.	Ryan Snyder		Affirmative	N/A
3	Tennessee Valley Authority	Justin Kuhlers		Affirmative	N/A
3	Tri-State G and T Association, Inc.	Amanda Skubal		Affirmative	N/A
3	TXNM Energy	Scott Thompson		Affirmative	N/A
3	Xcel Energy, Inc.	Nicholas Friebel		None	N/A
4	Alliant Energy Corporation Services, Inc.	Angela Dockter	Lexi Dobrzysnki	None	N/A
4	Arkansas Electric Cooperative Corporation	Jenni Sudduth		None	N/A
4	Buckeye Power, Inc.	Jason Procuniar	Ryan Strom	None	N/A
4	City Utilities of Springfield, Missouri	Jerry Bradshaw		Affirmative	N/A
4	FirstEnergy - FirstEnergy Corporation	Sarah Miller		Affirmative	N/A
4	Georgia System Operations Corporation	Katrina Lyons		Affirmative	N/A
4	Northern California Power Agency	Marty Hostler		None	N/A
4	Oklahoma Municipal Power Authority	Michael Watt		None	N/A
4	Public Utility District No. 1 of Snohomish County	Kristen Eyman		None	N/A
4	Public Utility District No. 2 of Grant County, Washington	Karla Weaver		Abstain	N/A

© 2026 - NERC Ver 4.2.1.0 Machine Name: ATLVPEROWEB01

Segment	Organization	Voter	Designated Proxy	Ballot	NERC Memo
4	Sacramento Municipal Utility District	Foung Mua	Tim Kelley	None	N/A
4	Seattle City Light	Robert Jones		Affirmative	N/A
4	Utility Services, Inc.	Carver Powers		Affirmative	N/A
4	WEC Energy Group, Inc.	Candace Morakinyo		None	N/A
4	Western Power Pool	Kevin Conway		Abstain	N/A
5	AEP	Thomas Foltz		Affirmative	N/A
5	Ameren - Ameren Missouri	Sam Dwyer		Affirmative	N/A
5	APS - Arizona Public Service Co.	Andrew Smith		Affirmative	N/A
5	Associated Electric Cooperative, Inc.	Chuck Booth		Affirmative	N/A
5	Austin Energy	Michael Dillard		Affirmative	N/A
5	Avista - Avista Corporation	Glen Farmer		Affirmative	N/A
5	BC Hydro and Power Authority	Vijay Raghunathan		Abstain	N/A
5	Berkshire Hathaway - NV Energy	Dwanique Spiller		Affirmative	N/A
5	Black Hills Corporation	Sheila Suurmeier		Affirmative	N/A
5	Buckeye Power, Inc.	Kevin Zemanek	Ryan Strom	None	N/A
5	California Department of Water Resources	ASM Mostafa		None	N/A
5	CMS Energy - Consumers Energy Company	David Greyerbiehl		Affirmative	N/A
5	Colorado Springs Utilities	Jeffrey Icke		Affirmative	N/A
5	Con Ed - Consolidated Edison Co. of New York	Michelle Pagano		Affirmative	N/A
5	Constellation	Marie Potter	Jamie Monette	Abstain	N/A
5	Cowlitz County PUD	Garrett Colkitt		None	N/A

© 2026 - NERC Ver 4.2.1.0 Machine Name: ATLVPEROWEB01

Segment	Organization	Voter	Designated Proxy	Ballot	NERC Memo
5	Dairyland Power Cooperative	Tommy Drea		None	N/A
5	Dominion - Dominion Resources, Inc.	Barbara Marion		Affirmative	N/A
5	DTE Energy	George Goddard		None	N/A
5	Duke Energy	Dale Goodwine		Affirmative	N/A
5	Edison International - Southern California Edison Company	Robert Blackney		Affirmative	N/A
5	Electric Power Supply Association	Bill Zuretti		None	N/A
5	Entergy - Entergy Services, Inc.	Gail Golden		Affirmative	N/A
5	Evergy	Jeremy Harris	Alan Kloster	Affirmative	N/A
5	FirstEnergy - FirstEnergy Corporation	Matthew Augustin		Affirmative	N/A
5	Great River Energy	Jacalynn Bentz		Affirmative	N/A
5	Greybeard Compliance Services, LLC	Mike Gabriel		Abstain	N/A
5	Hydro-Quebec (HQ)	Junji Yamaguchi	Chantal Mazza	Affirmative	N/A
5	Imperial Irrigation District	Tino Zaragoza	Denise Sanchez	Affirmative	N/A
5	JEA	John Babik		Negative	Third-Party Comments
5	Lincoln Electric System	Brittany Millard		Affirmative	N/A
5	Los Angeles Department of Water and Power	Robert Kerrigan		None	N/A
5	Lower Colorado River Authority	Joseph Scott		Affirmative	N/A
5	National Grid USA	Trishona Manganiello		Affirmative	N/A

© 2026 - NERC Ver 4.2.1.0 Machine Name: ATLVPEROWEB01

Segment	Organization	Voter	Designated Proxy	Ballot	NERC Memo
5	NB Power Corporation - New Brunswick Power Transmission Corporation	David Melanson		Negative	Comments Submitted
5	Nebraska Public Power District	Ronald Bender		Affirmative	N/A
5	New York Power Authority	Zahid Qayyum		Negative	Comments Submitted
5	NextEra Energy	Richard Vendetti		Affirmative	N/A
5	NiSource - Northern Indiana Public Service Co.	Kathryn Tackett		Negative	Comments Submitted
5	Northern California Power Agency	Jeremy Lawson	Chris Carnesi	None	N/A
5	NRG - NRG Energy, Inc.	Michael Scalise		Abstain	N/A
5	OGE Energy - Oklahoma Gas and Electric Co.	Patrick Wells		Affirmative	N/A
5	Oglethorpe Power Corporation	Donna Johnson		None	N/A
5	Oklahoma Municipal Power Authority	Patrick Tuttle		None	N/A
5	Omaha Public Power District	Kayleigh Wilkerson		Affirmative	N/A
5	OTP - Otter Tail Power Company	Laura Dewey		Affirmative	N/A
5	Pacific Gas and Electric Company	Tyler Brun	Bob Cardle	Negative	Comments Submitted
5	Platte River Power Authority	Jim Grothmann		Affirmative	N/A
5	Portland General Electric Co.	Ryan Olson		Abstain	N/A
5	PPL - Louisville Gas and Electric Co.	Julie Hostrander		None	N/A
5	PSEG Nuclear LLC	Sharon Brown		None	N/A
5	Public Utility District No. 1 of Chelan County	Rebecca Wickel		Negative	Comments Submitted

© 2026 - NERC Ver 4.2.1.0 Machine Name: ATLVPEROWEB01

Segment	Organization	Voter	Designated Proxy	Ballot	NERC Memo
5	Public Utility District No. 1 of Snohomish County	Becky Burden		Negative	Comments Submitted
5	Sacramento Municipal Utility District	Ryder Couch	Tim Kelley	None	N/A
5	Salt River Project	Matthew Jaramilla	Timothy Singh	Negative	Comments Submitted
5	Santee Cooper	Carey Salisbury		Abstain	N/A
5	Seattle City Light	Chris Shultz		None	N/A
5	Seminole Electric Cooperative, Inc.	Melanie Wong		None	N/A
5	Sempra - San Diego Gas and Electric	Jennifer Wright		Negative	Comments Submitted
5	Southern Company - Southern Company Generation	Leslie Burke		Affirmative	N/A
5	Southern Indiana Gas and Electric Co.	Rob Collins		Affirmative	N/A
5	Talen Generation, LLC	Donald Lock		Affirmative	N/A
5	Tennessee Valley Authority	Darren Boehm		Affirmative	N/A
5	Tri-State G and T Association, Inc.	Sergio Banuelos		Affirmative	N/A
5	U.S. Bureau of Reclamation	Wendy Kalidass		Affirmative	N/A
5	Xcel Energy, Inc.	Gerry Huitt		Negative	Comments Submitted
6	AEP	Randy Calhoun		Affirmative	N/A
6	Ameren - Ameren Services	Robert Quinlivan		Affirmative	N/A
6	APS - Arizona Public Service Co.	Marcus Bortman		Affirmative	N/A
6	Arkansas Electric Cooperative Corporation	Bruce Walkup		Abstain	N/A

© 2026 - NERC Ver 4.2.1.0 Machine Name: ATLVPEROWEB01

Segment	Organization	Voter	Designated Proxy	Ballot	NERC Memo
6	Associated Electric Cooperative, Inc.	Brian Ackermann		Affirmative	N/A
6	Austin Energy	Imane Mrini		Affirmative	N/A
6	Berkshire Hathaway - PacifiCorp	Lindsay Wickizer		Affirmative	N/A
6	Black Hills Corporation	Rachel Schuldt		Affirmative	N/A
6	Bonneville Power Administration	Tanner Brier		Negative	Comments Submitted
6	Cleco Corporation	Robert Hirchak	Clay Walker	Affirmative	N/A
6	Con Ed - Consolidated Edison Co. of New York	Jason Chandler		Affirmative	N/A
6	Constellation	Laura Brignola		Abstain	N/A
6	Dominion - Dominion Resources, Inc.	Alex Bekashoff		Affirmative	N/A
6	Duke Energy	John Sturgeon		Affirmative	N/A
6	Edison International - Southern California Edison Company	Stephanie Kenny		Affirmative	N/A
6	Entergy	Julie Hall		Affirmative	N/A
6	Evergy	Tiffany Lake	Alan Kloster	Affirmative	N/A
6	FirstEnergy - FirstEnergy Corporation	Stacey Sheehan		Affirmative	N/A
6	Great River Energy	Brian Meloy		Affirmative	N/A
6	Imperial Irrigation District	Diana Torres	Denise Sanchez	Affirmative	N/A
6	Lincoln Electric System	Eric Ruskamp		Affirmative	N/A
6	Los Angeles Department of Water and Power	Anton Vu		Affirmative	N/A
6	Muscatine Power and Water	Nicholas Burns		Affirmative	N/A
6	New York Power Authority	Shelly Dineen		Negative	Comments Submitted

© 2026 - NERC Ver 4.2.1.0 Machine Name: ATLVPEROWEB01

Segment	Organization	Voter	Designated Proxy	Ballot	NERC Memo
6	NextEra Energy - Florida Power and Light Co.	Justin Welty		Affirmative	N/A
6	NiSource - Northern Indiana Public Service Co.	Eugene Johnson		Negative	Comments Submitted
6	Northern California Power Agency	Dennis Sismaet	Chris Carnesi	None	N/A
6	OGE Energy - Oklahoma Gas and Electric Co.	Ashley F Stringer		Affirmative	N/A
6	Omaha Public Power District	Shonda Markus	David Ortiz	Affirmative	N/A
6	Platte River Power Authority	Sabrina Martz		None	N/A
6	Portland General Electric Co.	Stefanie Burke	Venessa Sneed	Abstain	N/A
6	Powerex Corporation	Raj Hundal		Abstain	N/A
6	PPL - Louisville Gas and Electric Co.	Jeremy Gesser		Affirmative	N/A
6	PSEG - PSEG Energy Resources and Trade LLC	Laura Wu		None	N/A
6	Public Utility District No. 1 of Chelan County	Tamarra Hardie		Negative	Comments Submitted
6	Sacramento Municipal Utility District	Charles Norton	Tim Kelley	None	N/A
6	Salt River Project	Israel Perez	Timothy Singh	Negative	Comments Submitted
6	Santee Cooper	Richard Kirkpatrick		Abstain	N/A
6	Seattle City Light	Daren Brubaker		Affirmative	N/A
6	Seminole Electric Cooperative, Inc.	Bret Galbraith		None	N/A
6	Snohomish County PUD No. 1	Nima Miri		Negative	Comments Submitted

© 2026 - NERC Ver 4.2.1.0 Machine Name: ATLVPEROWEB01

Segment	Organization	Voter	Designated Proxy	Ballot	NERC Memo
6	Southern Company - Southern Company Generation and Energy Marketing	Matthew O'neal		Affirmative	N/A
6	Southern Indiana Gas and Electric Co.	Kati Barr		Affirmative	N/A
6	Tennessee Valley Authority	Jeffrey Powell		Affirmative	N/A
6	Western Area Power Administration	Jennifer Neville		Negative	Comments Submitted
6	Xcel Energy, Inc.	Nicholas Detmer		Negative	Third-Party Comments
10	Midwest Reliability Organization	Tasha Ward		Negative	Comments Submitted
10	New York State Reliability Council	Leka Gjonaj		None	N/A
10	Northeast Power Coordinating Council	Ruida Shu		Abstain	N/A
10	ReliabilityFirst	Tremayne Brown		Affirmative	N/A
10	SERC Reliability Corporation	Dave Krueger		None	N/A
10	Texas Reliability Entity, Inc.	Rachel Coyne		Affirmative	N/A
10	Western Electricity Coordinating Council	Steven Rueckert		None	N/A

Previous 1 Next

Showing 1 to 293 of 293 entries

© 2026 - NERC Ver 4.2.1.0 Machine Name: ATLVPEROWEB01

BALLOT RESULTS

Comment: View Comment Results (/CommentResults/Index/387)
Ballot Name: Project 2023-06 CIP-014 Risk Assessment Refinement Implementation Plan AB 4 OT
Voting Start Date: 5/5/2026 12:01:00 AM
Voting End Date: 5/14/2026 8:00:00 PM
Ballot Type: OT
Ballot Activity: AB
Ballot Series: 4
Total # Votes: 227
Total Ballot Pool: 287
Quorum: 79.09
Quorum Established Date: 5/14/2026 4:27:26 PM
Weighted Segment Value: 82.81

Segment	Ballot Pool	Segment Weight	Affirmative Votes	Affirmative Fraction	Negative Votes w/ Comment	Negative Fraction w/ Comment	Negative Votes w/o Comment	Abstain	No Vote
Segment: 1	84	1	48	0.8	12	0.2	0	10	14
Segment: 2	7	0	0	0	0	0	0	6	1
Segment: 3	66	1	41	0.872	6	0.128	0	4	15
Segment: 4	14	0.4	4	0.4	0	0	0	2	8
Segment: 5	64	1	36	0.837	7	0.163	0	7	14
Segment: 6	45	1	30	0.882	4	0.118	0	6	5
Segment: 7	0	0	0	0	0	0	0	0	0
Segment: 8	0	0	0	0	0	0	0	0	0

© 2026 - NERC Ver 4.2.1.0 Machine Name: ATLVPEROWEB01

Segment	Ballot Pool	Segment Weight	Affirmative Votes	Affirmative Fraction	Negative Votes w/ Comment	Negative Fraction w/ Comment	Negative Votes w/o Comment	Abstain	No Vote
Segment: 9	0	0	0	0	0	0	0	0	0
Segment: 10	7	0.3	1	0.1	2	0.2	0	1	3
Totals:	287	4.7	160	3.892	31	0.808	0	36	60

BALLOT POOL MEMBERS

Show All entries Search: Search

Segment	Organization	Voter	Designated Proxy	Ballot	NERC Memo
1	AEP - AEP Service Corporation	Dennis Sauriol		Affirmative	N/A
1	Allete - Minnesota Power, Inc.	Hillary Creurer	Lori Frisk	Affirmative	N/A
1	Ameren - Ameren Services	Tamara Evey		Affirmative	N/A
1	American Transmission Company, LLC	Amy Wilke		Affirmative	N/A
1	APS - Arizona Public Service Co.	Daniela Atanasovski		Affirmative	N/A
1	Arkansas Electric Cooperative Corporation	Lily Green		None	N/A
1	Associated Electric Cooperative, Inc.	Mark Riley		Affirmative	N/A
1	Austin Energy	Thomas Standifur		Affirmative	N/A

© 2026 - NERC Ver 4.2.1.0 Machine Name: ATLVPEROWEB01

Segment	Organization	Voter	Designated Proxy	Ballot	NERC Memo
1	Balancing Authority of Northern California	Kevin Smith	Tim Kelley	None	N/A
1	BC Hydro and Power Authority	Adrian Andreoiu		Abstain	N/A
1	Berkshire Hathaway Energy - MidAmerican Energy Co.	Thomas Breen		Affirmative	N/A
1	Black Hills Corporation	Trevor Rombough		Affirmative	N/A
1	Bonneville Power Administration	Mai Truong		Negative	Comments Submitted
1	CenterPoint Energy Houston Electric, LLC	Daniela Hammons		Affirmative	N/A
1	Central Iowa Power Cooperative	Kelly Heims		Affirmative	N/A
1	City Utilities of Springfield, Missouri	Michael Buyce		Affirmative	N/A
1	Colorado Springs Utilities	Corey Walker		None	N/A
1	Con Ed - Consolidated Edison Co. of New York	Dermot Smyth		Affirmative	N/A
1	Dairyland Power Cooperative	Karrie Schuldt		Affirmative	N/A
1	Dominion - Dominion Virginia Power	Steven Belle		Affirmative	N/A
1	Duke Energy	Katherine Street		Affirmative	N/A
1	Edison International - Southern California Edison Company	Hayk Zargaryan		Affirmative	N/A
1	Entergy	Brian Lindsey		Affirmative	N/A
1	Evergy	Kevin Frick	Alan Kloster	Affirmative	N/A
1	Eversource Energy	Joshua London		Affirmative	N/A
1	Exelon	Daniel Gacek		Affirmative	N/A

© 2026 - NERC Ver 4.2.1.0 Machine Name: ATLVPEROWEB01

Segment	Organization	Voter	Designated Proxy	Ballot	NERC Memo
1	FirstEnergy - FirstEnergy Corporation	Theresa Ciancio		Affirmative	N/A
1	Georgia Transmission Corporation	Greg Davis	Stephen Stafford	Affirmative	N/A
1	Glencoe Light and Power Commission	Terry Volkmann		Affirmative	N/A
1	Great River Energy	Mark Peterson		None	N/A
1	Hydro One Networks, Inc.	Aditya Menon	Oshara Narangoda	Abstain	N/A
1	Hydro-Quebec (HQ)	Nicolas Turcotte	Chantal Mazza	Affirmative	N/A
1	IDACORP - Idaho Power Company	Sean Steffensen		Abstain	N/A
1	Imperial Irrigation District	Jesus Sammy Alcaraz	Denise Sanchez	Affirmative	N/A
1	International Transmission Company Holdings Corporation	Michael Moltane	Gail Elliott	Negative	Comments Submitted
1	Lakeland Electric	Larry Watt		None	N/A
1	Lincoln Electric System	Josh Johnson		Affirmative	N/A
1	Long Island Power Authority	Isidoro Behar		Negative	Comments Submitted
1	Los Angeles Department of Water and Power	Jonathon Flores		None	N/A
1	Lower Colorado River Authority	Matt Lewis		Affirmative	N/A
1	M and A Electric Power Cooperative	William Price		Affirmative	N/A
1	Manitoba Hydro	Nazra Gladu		Abstain	N/A
1	Minnkota Power Cooperative Inc.	Theresa Allard	Nikki Carson-Marquis	Negative	Comments Submitted
1	Muscatine Power and Water	Andrew Kurriger		Affirmative	N/A

© 2026 - NERC Ver 4.2.1.0 Machine Name: ATLVPEROWEB01

Segment	Organization	Voter	Designated Proxy	Ballot	NERC Memo
1	N.W. Electric Power Cooperative, Inc.	Mark Ramsey		Affirmative	N/A
1	National Grid USA	Jacqueline Ryan		Affirmative	N/A
1	NB Power Corporation	Jeffrey Streifling		Negative	Comments Submitted
1	Nebraska Public Power District	Jamison Cawley		Affirmative	N/A
1	Network and Security Technologies	Nick Lauriat		None	N/A
1	New York Power Authority	Daniel Valle		Negative	Comments Submitted
1	NextEra Energy - Florida Power and Light Co.	Silvia Mitchell		Affirmative	N/A
1	NiSource - Northern Indiana Public Service Co.	Alison Nickells		Negative	Comments Submitted
1	Northeast Missouri Electric Power Cooperative	Brett Douglas		Affirmative	N/A
1	OGE Energy - Oklahoma Gas and Electric Co.	Terri Pyle		Affirmative	N/A
1	Oncor Electric Delivery	Byron Booker	Lucinda Bradshaw	None	N/A
1	OTP - Otter Tail Power Company	Charles Wicklund		Affirmative	N/A
1	Pacific Gas and Electric Company	Marco Rios	Bob Cardle	Negative	Comments Submitted
1	Pedernales Electric Cooperative, Inc.	Bradley Collard		Abstain	N/A
1	Platte River Power Authority	Marissa Archie		Affirmative	N/A
1	Portland General Electric Co.	Brooke Jockin		Abstain	N/A

© 2026 - NERC Ver 4.2.1.0 Machine Name: ATLVPEROWEB01

Segment	Organization	Voter	Designated Proxy	Ballot	NERC Memo
1	PPL Electric Utilities Corporation	Michelle McCartney Longo		Affirmative	N/A
1	PSEG - Public Service Electric and Gas Co.	Karen Arnold		None	N/A
1	Public Utility District No. 1 of Chelan County	Maggie Bravo		Affirmative	N/A
1	Public Utility District No. 1 of Snohomish County	Alyssia Rhoads		Affirmative	N/A
1	Public Utility District No. 2 of Grant County, Washington	Joanne Anderson		Abstain	N/A
1	Sacramento Municipal Utility District	Wei Shao	Tim Kelley	None	N/A
1	Salt River Project	Laura Somak	Timothy Singh	Affirmative	N/A
1	Santee Cooper	Franklin Settle		Abstain	N/A
1	SaskPower	Wayne Guttormson		Abstain	N/A
1	Seminole Electric Cooperative, Inc.	Khang Le		Negative	Comments Submitted
1	Sempra - San Diego Gas and Electric	Mo Derbas		Negative	Comments Submitted
1	Sho-Me Power Electric Cooperative	Oskar Olson		None	N/A
1	Southern Company - Southern Company Services, Inc.	Matt Carden		Affirmative	N/A
1	Southwestern Power Administration	Angela Wheat		Affirmative	N/A
1	Sunflower Electric Power Corporation	Paul Mehlhaff		None	N/A
1	Tacoma Public Utilities (Tacoma, WA)	John Merrell	Jennie Wike	Affirmative	N/A

© 2026 - NERC Ver 4.2.1.0 Machine Name: ATLVPEROWEB01

Segment	Organization	Voter	Designated Proxy	Ballot	NERC Memo
1	Tallahassee Electric (City of Tallahassee, FL)	Scott Langston		Affirmative	N/A
1	Tennessee Valley Authority	David Plumb		Affirmative	N/A
1	Tri-State G and T Association, Inc.	Donna Wood		None	N/A
1	U.S. Bureau of Reclamation	Richard Jackson		Negative	Comments Submitted
1	Unisource - Tucson Electric Power Co.	Jessica Cordero		Affirmative	N/A
1	VELCO -Vermont Electric Power Company, Inc.	Randall Buswell		None	N/A
1	Western Area Power Administration	Keihen Allen-Kitchen		Abstain	N/A
1	Xcel Energy, Inc.	Eric Barry		Negative	Comments Submitted
2	California ISO	Filipe Coelho		Abstain	N/A
2	Electric Reliability Council of Texas, Inc.	Kennedy Meier		Abstain	N/A
2	ISO New England, Inc.	John Pearson		Abstain	N/A
2	Midcontinent ISO, Inc.	Kirsten Rowley		Abstain	N/A
2	New York Independent System Operator	Gregory Campoli		None	N/A
2	PJM Interconnection, L.L.C.	Thomas Foster	Elizabeth Davis	Abstain	N/A
2	Southwest Power Pool, Inc. (RTO)	Joshua Phillips	Mia Wilson	Abstain	N/A
3	AEP	Jodi Yeary		Affirmative	N/A
3	Ameren - Ameren Services	David Jendras Sr	Nick Leathers	Affirmative	N/A
3	APS - Arizona Public Service Co.	Jessica Lopez		Affirmative	N/A
3	Arkansas Electric Cooperative Corporation	Ayslynn Mcavoy		Abstain	N/A

© 2026 - NERC Ver 4.2.1.0 Machine Name: ATLVPEROWEB01

Segment	Organization	Voter	Designated Proxy	Ballot	NERC Memo
3	Associated Electric Cooperative, Inc.	Todd Bennett		Affirmative	N/A
3	Austin Energy	Lovita Griffin		None	N/A
3	Avista - Avista Corporation	Robert Follini		None	N/A
3	BC Hydro and Power Authority	Cameron Chung		Abstain	N/A
3	Berkshire Hathaway Energy - MidAmerican Energy Co.	Matthew Kloos		None	N/A
3	Black Hills Corporation	Josh Combs		Affirmative	N/A
3	Bonneville Power Administration	Ron Sporseen		Negative	Comments Submitted
3	Buckeye Power, Inc.	Tom Schmidt	Ryan Strom	None	N/A
3	Central Electric Power Cooperative (Missouri)	Adam Weber		Affirmative	N/A
3	City Utilities of Springfield, Missouri	Jessica Morrissey		None	N/A
3	Colorado Springs Utilities	Hillary Dobson		Affirmative	N/A
3	Con Ed - Consolidated Edison Co. of New York	Arman Shiplu		Affirmative	N/A
3	Dominion - Dominion Virginia Power	Matt Bullard		Affirmative	N/A
3	Duke Energy - Florida Power Corporation	Marcelo Pesantez		Affirmative	N/A
3	Edison International - Southern California Edison Company	Todd Garwick		Affirmative	N/A
3	Entergy	James Keele		Affirmative	N/A
3	Evergy	Marcus Moor	Alan Kloster	Affirmative	N/A
3	Eversource Energy	Vicki O'Leary		Affirmative	N/A
3	Exelon	Kinte Whitehead		Affirmative	N/A

© 2026 - NERC Ver 4.2.1.0 Machine Name: ATLVPEROWEB01

Segment	Organization	Voter	Designated Proxy	Ballot	NERC Memo
3	FirstEnergy - FirstEnergy Corporation	Aaron Ghodooshim		Affirmative	N/A
3	Georgia System Operations Corporation	Naresh Latchman		Affirmative	N/A
3	Great River Energy	Joseph Gatten		Affirmative	N/A
3	Imperial Irrigation District	Jorge Gutierrez		None	N/A
3	KAMO Electric Cooperative	Tony Gott		Affirmative	N/A
3	Lincoln Electric System	Sam Christensen		Affirmative	N/A
3	Los Angeles Department of Water and Power	Fausto Serratos		Affirmative	N/A
3	M and A Electric Power Cooperative	Gary Dollins		Affirmative	N/A
3	MEAG Power	Roger Brand	Rebika Yitna	None	N/A
3	MGE Energy - Madison Gas and Electric Co.	Ken Bartz		Abstain	N/A
3	Muscatine Power and Water	Seth Shoemaker		Affirmative	N/A
3	National Grid USA	Brian Shanahan		Affirmative	N/A
3	Nebraska Public Power District	Kevin Schawang		Affirmative	N/A
3	New York Power Authority	Richard Machado		Negative	Comments Submitted
3	NextEra Energy - Florida Power and Light Co.	Karen Demos		None	N/A
3	NiSource - Northern Indiana Public Service Co.	Steven Taddeucci		Negative	Comments Submitted
3	Northeast Missouri Electric Power Cooperative	Skyler Wiegmann		Affirmative	N/A
3	Northern California Power Agency	Michael Whitney	Chris Carnesi	None	N/A

© 2026 - NERC Ver 4.2.1.0 Machine Name: ATLVPEROWEB01

Segment	Organization	Voter	Designated Proxy	Ballot	NERC Memo
3	NW Electric Power Cooperative, Inc.	Heath Henry		Affirmative	N/A
3	OGE Energy - Oklahoma Gas and Electric Co.	Donald Hargrove		Affirmative	N/A
3	Omaha Public Power District	David Heins		Affirmative	N/A
3	Orlando Utilities Commission	Ballard Mutters		None	N/A
3	OTP - Otter Tail Power Company	Tony Huseby		Affirmative	N/A
3	Pacific Gas and Electric Company	Sandra Ellis	Bob Cardle	Negative	Comments Submitted
3	Platte River Power Authority	Richard Kiess		None	N/A
3	Portland General Electric Co.	Mayra Franco		None	N/A
3	PPL - Louisville Gas and Electric Co.	James Frank		Affirmative	N/A
3	PSEG - Public Service Electric and Gas Co.	Christopher Murphy		None	N/A
3	Public Utility District No. 1 of Chelan County	Joyce Gundry		Affirmative	N/A
3	Puget Sound Energy, Inc.	Kelley Sargent		Affirmative	N/A
3	Sacramento Municipal Utility District	Nicole Looney	Tim Kelley	None	N/A
3	Salt River Project	Jennifer Bennett	Timothy Singh	Affirmative	N/A
3	Santee Cooper	Marty Watson		Abstain	N/A
3	Seminole Electric Cooperative, Inc.	Lewis Snyder		Negative	Comments Submitted
3	Sempra - San Diego Gas and Electric	Bryan Bennett		Negative	Comments Submitted
3	Sho-Me Power Electric Cooperative	Jarrod Murdaugh		Affirmative	N/A

© 2026 - NERC Ver 4.2.1.0 Machine Name: ATLVPEROWEB01

Segment	Organization	Voter	Designated Proxy	Ballot	NERC Memo
3	Snohomish County PUD No. 1	Holly Chaney		Affirmative	N/A
3	Southern Company - Alabama Power Company	Joel Dembowski		Affirmative	N/A
3	Southern Indiana Gas and Electric Co.	Ryan Snyder		Affirmative	N/A
3	Tennessee Valley Authority	Justin Kuhlers		Affirmative	N/A
3	Tri-State G and T Association, Inc.	Amanda Skubal		Affirmative	N/A
3	TXNM Energy	Scott Thompson		Affirmative	N/A
3	Xcel Energy, Inc.	Nicholas Friebel		None	N/A
4	Alliant Energy Corporation Services, Inc.	Angela Dockter	Lexi Dobrzysnki	None	N/A
4	Arkansas Electric Cooperative Corporation	Jenni Sudduth		None	N/A
4	Buckeye Power, Inc.	Jason Procuniar	Ryan Strom	None	N/A
4	City Utilities of Springfield, Missouri	Jerry Bradshaw		Affirmative	N/A
4	FirstEnergy - FirstEnergy Corporation	Sarah Miller		Affirmative	N/A
4	Georgia System Operations Corporation	Katrina Lyons		Affirmative	N/A
4	Northern California Power Agency	Marty Hostler		None	N/A
4	Oklahoma Municipal Power Authority	Michael Watt		None	N/A
4	Public Utility District No. 1 of Snohomish County	Kristen Eyman		None	N/A
4	Public Utility District No. 2 of Grant County, Washington	Karla Weaver		Abstain	N/A
4	Sacramento Municipal Utility District	Foung Mua	Tim Kelley	None	N/A

© 2026 - NERC Ver 4.2.1.0 Machine Name: ATLVPEROWEB01

Segment	Organization	Voter	Designated Proxy	Ballot	NERC Memo
4	Utility Services, Inc.	Carver Powers		Affirmative	N/A
4	WEC Energy Group, Inc.	Candace Morakinyo		None	N/A
4	Western Power Pool	Kevin Conway		Abstain	N/A
5	AEP	Thomas Foltz		Affirmative	N/A
5	Ameren - Ameren Missouri	Sam Dwyer		Affirmative	N/A
5	APS - Arizona Public Service Co.	Andrew Smith		Affirmative	N/A
5	Associated Electric Cooperative, Inc.	Chuck Booth		Affirmative	N/A
5	Austin Energy	Michael Dillard		Affirmative	N/A
5	Avista - Avista Corporation	Glen Farmer		Affirmative	N/A
5	BC Hydro and Power Authority	Vijay Raghunathan		Abstain	N/A
5	Berkshire Hathaway - NV Energy	Dwanique Spiller		Affirmative	N/A
5	Black Hills Corporation	Sheila Suurmeier		Affirmative	N/A
5	Buckeye Power, Inc.	Kevin Zemanek	Ryan Strom	None	N/A
5	California Department of Water Resources	ASM Mostafa		None	N/A
5	CMS Energy - Consumers Energy Company	David Greyerbiehl		Affirmative	N/A
5	Colorado Springs Utilities	Jeffrey Icke		Affirmative	N/A
5	Con Ed - Consolidated Edison Co. of New York	Michelle Pagano		Affirmative	N/A
5	Constellation	Marie Potter	Jamie Monette	Abstain	N/A
5	Cowlitz County PUD	Garrett Colkitt		None	N/A
5	Dairyland Power Cooperative	Tommy Drea		None	N/A

© 2026 - NERC Ver 4.2.1.0 Machine Name: ATLVPEROWEB01

Segment	Organization	Voter	Designated Proxy	Ballot	NERC Memo
5	Dominion - Dominion Resources, Inc.	Barbara Marion		Affirmative	N/A
5	DTE Energy	George Goddard		None	N/A
5	Duke Energy	Dale Goodwine		Affirmative	N/A
5	Edison International - Southern California Edison Company	Robert Blackney		Affirmative	N/A
5	Electric Power Supply Association	Bill Zuretti		None	N/A
5	Entergy - Entergy Services, Inc.	Gail Golden		Affirmative	N/A
5	Evergy	Jeremy Harris	Alan Kloster	Affirmative	N/A
5	FirstEnergy - FirstEnergy Corporation	Matthew Augustin		Affirmative	N/A
5	Great River Energy	Jacalynn Bentz		Affirmative	N/A
5	Greybeard Compliance Services, LLC	Mike Gabriel		Abstain	N/A
5	Hydro-Quebec (HQ)	Junji Yamaguchi	Chantal Mazza	Affirmative	N/A
5	Imperial Irrigation District	Tino Zaragoza	Denise Sanchez	Affirmative	N/A
5	JEA	John Babik		Negative	Third-Party Comments
5	Lincoln Electric System	Brittany Millard		Affirmative	N/A
5	Los Angeles Department of Water and Power	Robert Kerrigan		None	N/A
5	Lower Colorado River Authority	Joseph Scott		Affirmative	N/A
5	National Grid USA	Trishona Manganiello		Affirmative	N/A
5	NB Power Corporation - New Brunswick Power Transmission Corporation	David Melanson		Abstain	N/A

© 2026 - NERC Ver 4.2.1.0 Machine Name: ATLVPEROWEB01

Segment	Organization	Voter	Designated Proxy	Ballot	NERC Memo
5	Nebraska Public Power District	Ronald Bender		Affirmative	N/A
5	New York Power Authority	Zahid Qayyum		Negative	Comments Submitted
5	NextEra Energy	Richard Vendetti		Affirmative	N/A
5	NiSource - Northern Indiana Public Service Co.	Kathryn Tackett		Negative	Comments Submitted
5	Northern California Power Agency	Jeremy Lawson	Chris Carnesi	None	N/A
5	NRG - NRG Energy, Inc.	Michael Scalise		Abstain	N/A
5	OGE Energy - Oklahoma Gas and Electric Co.	Patrick Wells		Affirmative	N/A
5	Oglethorpe Power Corporation	Donna Johnson		None	N/A
5	Oklahoma Municipal Power Authority	Patrick Tuttle		None	N/A
5	Omaha Public Power District	Kayleigh Wilkerson		Affirmative	N/A
5	OTP - Otter Tail Power Company	Laura Dewey		Affirmative	N/A
5	Pacific Gas and Electric Company	Tyler Brun	Bob Cardle	Negative	Comments Submitted
5	Platte River Power Authority	Jim Grothmann		Affirmative	N/A
5	Portland General Electric Co.	Ryan Olson		Abstain	N/A
5	PPL - Louisville Gas and Electric Co.	Julie Hostrander		None	N/A
5	PSEG Nuclear LLC	Sharon Brown		None	N/A
5	Public Utility District No. 1 of Chelan County	Rebecca Wickel		Affirmative	N/A
5	Public Utility District No. 1 of Snohomish County	Becky Burden		Affirmative	N/A

© 2026 - NERC Ver 4.2.1.0 Machine Name: ATLVPEROWEB01

Segment	Organization	Voter	Designated Proxy	Ballot	NERC Memo
5	Sacramento Municipal Utility District	Ryder Couch	Tim Kelley	None	N/A
5	Salt River Project	Matthew Jaramilla	Timothy Singh	Affirmative	N/A
5	Santee Cooper	Carey Salisbury		Abstain	N/A
5	Seminole Electric Cooperative, Inc.	Melanie Wong		None	N/A
5	Sempra - San Diego Gas and Electric	Jennifer Wright		Negative	Comments Submitted
5	Southern Company - Southern Company Generation	Leslie Burke		Affirmative	N/A
5	Southern Indiana Gas and Electric Co.	Rob Collins		Affirmative	N/A
5	Tennessee Valley Authority	Darren Boehm		Affirmative	N/A
5	Tri-State G and T Association, Inc.	Sergio Banuelos		Affirmative	N/A
5	U.S. Bureau of Reclamation	Wendy Kalidass		Negative	Comments Submitted
5	Xcel Energy, Inc.	Gerry Huitt		Negative	Comments Submitted
6	AEP	Randy Calhoun		Affirmative	N/A
6	Ameren - Ameren Services	Robert Quinlivan		Affirmative	N/A
6	APS - Arizona Public Service Co.	Marcus Bortman		Affirmative	N/A
6	Arkansas Electric Cooperative Corporation	Bruce Walkup		Abstain	N/A
6	Associated Electric Cooperative, Inc.	Brian Ackermann		Affirmative	N/A
6	Austin Energy	Imane Mrini		Affirmative	N/A
6	Berkshire Hathaway - PacifiCorp	Lindsay Wickizer		Affirmative	N/A

© 2026 - NERC Ver 4.2.1.0 Machine Name: ATLVPEROWEB01

Segment	Organization	Voter	Designated Proxy	Ballot	NERC Memo
6	Black Hills Corporation	Rachel Schuldt		Affirmative	N/A
6	Bonneville Power Administration	Tanner Brier		Negative	Comments Submitted
6	Cleco Corporation	Robert Hirchak	Clay Walker	Affirmative	N/A
6	Con Ed - Consolidated Edison Co. of New York	Jason Chandler		Affirmative	N/A
6	Constellation	Laura Brignola		Abstain	N/A
6	Dominion - Dominion Resources, Inc.	Alex Bekashoff		Affirmative	N/A
6	Duke Energy	John Sturgeon		Affirmative	N/A
6	Edison International - Southern California Edison Company	Stephanie Kenny		Affirmative	N/A
6	Entergy	Julie Hall		Affirmative	N/A
6	Evergy	Tiffany Lake	Alan Kloster	Affirmative	N/A
6	FirstEnergy - FirstEnergy Corporation	Stacey Sheehan		Affirmative	N/A
6	Great River Energy	Brian Meloy		Affirmative	N/A
6	Imperial Irrigation District	Diana Torres	Denise Sanchez	Affirmative	N/A
6	Lincoln Electric System	Eric Ruskamp		Affirmative	N/A
6	Los Angeles Department of Water and Power	Anton Vu		Affirmative	N/A
6	Muscatine Power and Water	Nicholas Burns		Affirmative	N/A
6	New York Power Authority	Shelly Dineen		Negative	Comments Submitted
6	NextEra Energy - Florida Power and Light Co.	Justin Welty		Affirmative	N/A
6	NiSource - Northern Indiana Public Service Co.	Eugene Johnson		Negative	Comments Submitted
6	Northern California Power Agency	Dennis Sismaet	Chris Carnesi	None	N/A

© 2026 - NERC Ver 4.2.1.0 Machine Name: ATLVPEROWEB01

Segment	Organization	Voter	Designated Proxy	Ballot	NERC Memo
6	OGE Energy - Oklahoma Gas and Electric Co.	Ashley F Stringer		Affirmative	N/A
6	Omaha Public Power District	Shonda Markus	David Ortiz	Affirmative	N/A
6	Platte River Power Authority	Sabrina Martz		None	N/A
6	Portland General Electric Co.	Stefanie Burke	Venessa Sneed	Abstain	N/A
6	Powerex Corporation	Raj Hundal		Abstain	N/A
6	PPL - Louisville Gas and Electric Co.	Jeremy Gesser		Affirmative	N/A
6	PSEG - PSEG Energy Resources and Trade LLC	Laura Wu		None	N/A
6	Public Utility District No. 1 of Chelan County	Tamarra Hardie		Affirmative	N/A
6	Sacramento Municipal Utility District	Charles Norton	Tim Kelley	None	N/A
6	Salt River Project	Israel Perez	Timothy Singh	Affirmative	N/A
6	Santee Cooper	Richard Kirkpatrick		Abstain	N/A
6	Seminole Electric Cooperative, Inc.	Bret Galbraith		None	N/A
6	Snohomish County PUD No. 1	Nima Miri		Affirmative	N/A
6	Southern Company - Southern Company Generation and Energy Marketing	Matthew O'neal		Affirmative	N/A
6	Southern Indiana Gas and Electric Co.	Kati Barr		Affirmative	N/A
6	Tennessee Valley Authority	Jeffrey Powell		Affirmative	N/A
6	Western Area Power Administration	Jennifer Neville		Abstain	N/A

© 2026 - NERC Ver 4.2.1.0 Machine Name: ATLVPEROWEB01

Segment	Organization	Voter	Designated Proxy	Ballot	NERC Memo
6	Xcel Energy, Inc.	Nicholas Detmer		Negative	Third-Party Comments
10	Midwest Reliability Organization	Tasha Ward		Negative	Comments Submitted
10	New York State Reliability Council	Leka Gjonaj		None	N/A
10	Northeast Power Coordinating Council	Ruida Shu		Abstain	N/A
10	ReliabilityFirst	Tremayne Brown		Affirmative	N/A
10	SERC Reliability Corporation	Dave Krueger		None	N/A
10	Texas Reliability Entity, Inc.	Rachel Coyne		Negative	Comments Submitted
10	Western Electricity Coordinating Council	Steven Rueckert		None	N/A

Previous 1 Next

Showing 1 to 287 of 287 entries

© 2026 - NERC Ver 4.2.1.0 Machine Name: ATLVPEROWEB01

BALLOT RESULTS

Comment: View Comment Results (/CommentResults/Index/387)
Ballot Name: Project 2023-06 CIP-014 Risk Assessment Refinement CIP-014-4 | Non-Binding Poll AB 4 NB
Voting Start Date: 5/5/2026 12:01:00 AM
Voting End Date: 5/14/2026 8:00:00 PM
Ballot Type: NB
Ballot Activity: AB
Ballot Series: 4
Total # Votes: 217
Total Ballot Pool: 281
Quorum: 77.22
Quorum Established Date: 5/14/2026 5:36:44 PM
Weighted Segment Value: 76.97

Segment	Ballot Pool	Segment Weight	Affirmative Votes	Affirmative Fraction	Negative Votes	Negative Fraction	Abstain	No Vote
Segment: 1	81	1	38	0.731	14	0.269	14	15
Segment: 2	7	0	0	0	0	0	6	1
Segment: 3	64	1	32	0.78	9	0.22	8	15
Segment: 4	14	0.4	4	0.4	0	0	2	8
Segment: 5	64	1	30	0.789	8	0.211	11	15
Segment: 6	44	1	21	0.778	6	0.222	10	7
Segment: 7	0	0	0	0	0	0	0	0
Segment: 8	0	0	0	0	0	0	0	0
Segment: 9	0	0	0	0	0	0	0	0

© 2026 - NERC Ver 4.2.1.0 Machine Name: ATLVPEROWEB01

Segment	Ballot Pool	Segment Weight	Affirmative Votes	Affirmative Fraction	Negative Votes	Negative Fraction	Abstain	No Vote
Segment: 10	7	0.3	2	0.2	1	0.1	1	3
Totals:	281	4.7	127	3.679	38	1.021	52	64

BALLOT POOL MEMBERS

Show All entries Search: Search

Segment	Organization	Voter	Designated Proxy	Ballot	NERC Memo
1	AEP - AEP Service Corporation	Dennis Sauriol		Affirmative	N/A
1	Allete - Minnesota Power, Inc.	Hillary Creurer	Lori Frisk	Affirmative	N/A
1	Ameren - Ameren Services	Tamara Evey		Abstain	N/A
1	American Transmission Company, LLC	Amy Wilke		Affirmative	N/A
1	APS - Arizona Public Service Co.	Daniela Atanasovski		Affirmative	N/A
1	Arkansas Electric Cooperative Corporation	Lily Green		None	N/A
1	Associated Electric Cooperative, Inc.	Mark Riley		Affirmative	N/A
1	Austin Energy	Thomas Standifur		Affirmative	N/A
1	Balancing Authority of Northern California	Kevin Smith	Tim Kelley	None	N/A
1	BC Hydro and Power Authority	Adrian Andreoiu		Abstain	N/A

© 2026 - NERC Ver 4.0.1.0 Machine Name: ATLVPEROWEB01

Segment	Organization	Voter	Designated Proxy	Ballot	NERC Memo
1	Berkshire Hathaway Energy - MidAmerican Energy Co.	Thomas Breen		Affirmative	N/A
1	Black Hills Corporation	Trevor Rombough		Affirmative	N/A
1	Bonneville Power Administration	Mai Truong		Negative	No Comment Submitted
1	CenterPoint Energy Houston Electric, LLC	Daniela Hammons		Affirmative	N/A
1	Central Iowa Power Cooperative	Kelly Heims		Affirmative	N/A
1	City Utilities of Springfield, Missouri	Michael Buyce		Affirmative	N/A
1	Colorado Springs Utilities	Corey Walker		None	N/A
1	Con Ed - Consolidated Edison Co. of New York	Dermot Smyth		Affirmative	N/A
1	Dairyland Power Cooperative	Karrie Schuldt		Affirmative	N/A
1	Dominion - Dominion Virginia Power	Steven Belle		Affirmative	N/A
1	Duke Energy	Katherine Street		Affirmative	N/A
1	Edison International - Southern California Edison Company	Hayk Zargaryan		Affirmative	N/A
1	Entergy	Brian Lindsey		Affirmative	N/A
1	Evergy	Kevin Frick	Alan Kloster	Affirmative	N/A
1	Eversource Energy	Joshua London		Affirmative	N/A
1	Exelon	Daniel Gacek		Affirmative	N/A
1	FirstEnergy - FirstEnergy Corporation	Theresa Ciancio		Affirmative	N/A
1	Georgia Transmission Corporation	Greg Davis	Stephen Stafford	Affirmative	N/A

© 2026 - NERC Ver 4.2.1.0 Machine Name: ATLVPEROWEB01

Segment	Organization	Voter	Designated Proxy	Ballot	NERC Memo
1	Glencoe Light and Power Commission	Terry Volkmann		Affirmative	N/A
1	Great River Energy	Mark Peterson		None	N/A
1	Hydro One Networks, Inc.	Aditya Menon	Oshara Narangoda	Negative	No Comment Submitted
1	Hydro-Quebec (HQ)	Nicolas Turcotte	Chantal Mazza	Affirmative	N/A
1	IDACORP - Idaho Power Company	Sean Steffensen		Abstain	N/A
1	Imperial Irrigation District	Jesus Sammy Alcaraz	Denise Sanchez	Affirmative	N/A
1	International Transmission Company Holdings Corporation	Michael Moltane	Gail Elliott	Negative	No Comment Submitted
1	Lakeland Electric	Larry Watt		None	N/A
1	Lincoln Electric System	Josh Johnson		Abstain	N/A
1	Long Island Power Authority	Isidoro Behar		Abstain	N/A
1	Los Angeles Department of Water and Power	Jonathon Flores		None	N/A
1	Lower Colorado River Authority	Matt Lewis		Affirmative	N/A
1	M and A Electric Power Cooperative	William Price		Affirmative	N/A
1	Minnkota Power Cooperative Inc.	Theresa Allard	Nikki Carson-Marquis	Negative	No Comment Submitted
1	Muscatine Power and Water	Andrew Kurriger		Affirmative	N/A
1	N.W. Electric Power Cooperative, Inc.	Mark Ramsey		Affirmative	N/A
1	National Grid USA	Jacqueline Ryan		Affirmative	N/A

© 2026 - NERC Ver 4.2.1.0 Machine Name: ATLVPEROWEB01

Segment	Organization	Voter	Designated Proxy	Ballot	NERC Memo
1	NB Power Corporation	Jeffrey Streifling		Negative	No Comment Submitted
1	Nebraska Public Power District	Jamison Cawley		Abstain	N/A
1	Network and Security Technologies	Nick Lauriat		None	N/A
1	New York Power Authority	Daniel Valle		Negative	No Comment Submitted
1	NextEra Energy - Florida Power and Light Co.	Silvia Mitchell		Abstain	N/A
1	NiSource - Northern Indiana Public Service Co.	Alison Nickells		Negative	No Comment Submitted
1	Northeast Missouri Electric Power Cooperative	Brett Douglas		Affirmative	N/A
1	OGE Energy - Oklahoma Gas and Electric Co.	Terri Pyle		Affirmative	N/A
1	Oncor Electric Delivery	Byron Booker	Lucinda Bradshaw	None	N/A
1	Pacific Gas and Electric Company	Marco Rios	Bob Cardle	Negative	No Comment Submitted
1	Pedernales Electric Cooperative, Inc.	Bradley Collard		Abstain	N/A
1	Platte River Power Authority	Marissa Archie		Affirmative	N/A
1	Portland General Electric Co.	Brooke Jockin		Abstain	N/A
1	PPL Electric Utilities Corporation	Michelle McCartney Longo		None	N/A
1	PSEG - Public Service Electric and Gas Co.	Karen Arnold		None	N/A

© 2026 - NERC Ver 4.2.1.0 Machine Name: ATLVPEROWEB01

Segment	Organization	Voter	Designated Proxy	Ballot	NERC Memo
1	Public Utility District No. 1 of Chelan County	Maggie Bravo		Negative	No Comment Submitted
1	Public Utility District No. 1 of Snohomish County	Alyssia Rhoads		Negative	No Comment Submitted
1	Public Utility District No. 2 of Grant County, Washington	Joanne Anderson		Abstain	N/A
1	Sacramento Municipal Utility District	Wei Shao	Tim Kelley	None	N/A
1	Salt River Project	Laura Somak	Timothy Singh	Negative	No Comment Submitted
1	Santee Cooper	Franklin Settle		Abstain	N/A
1	SaskPower	Wayne Guttormson		Abstain	N/A
1	Seminole Electric Cooperative, Inc.	Khang Le		Negative	No Comment Submitted
1	Sempra - San Diego Gas and Electric	Mo Derbas		Negative	No Comment Submitted
1	Sho-Me Power Electric Cooperative	Oskar Olson		None	N/A
1	Southern Company - Southern Company Services, Inc.	Matt Carden		Affirmative	N/A
1	Southwestern Power Administration	Angela Wheat		Affirmative	N/A
1	Sunflower Electric Power Corporation	Paul Mehlhaff		None	N/A
1	Tacoma Public Utilities (Tacoma, WA)	John Merrell	Jennie Wike	Negative	No Comment Submitted

© 2026 - NERC Ver 4.2.1.0 Machine Name: ATLVPEROWEB01

Segment	Organization	Voter	Designated Proxy	Ballot	NERC Memo
1	Tallahassee Electric (City of Tallahassee, FL)	Scott Langston		Affirmative	N/A
1	Tennessee Valley Authority	David Plumb		Abstain	N/A
1	Tri-State G and T Association, Inc.	Donna Wood		None	N/A
1	U.S. Bureau of Reclamation	Richard Jackson		Affirmative	N/A
1	Unisource - Tucson Electric Power Co.	Jessica Cordero		Affirmative	N/A
1	VELCO -Vermont Electric Power Company, Inc.	Randall Buswell		None	N/A
1	Western Area Power Administration	Keihen Allen-Kitchen		Abstain	N/A
2	California ISO	Filipe Coelho		Abstain	N/A
2	Electric Reliability Council of Texas, Inc.	Kennedy Meier		Abstain	N/A
2	ISO New England, Inc.	John Pearson		Abstain	N/A
2	Midcontinent ISO, Inc.	Kirsten Rowley		Abstain	N/A
2	New York Independent System Operator	Gregory Campoli		None	N/A
2	PJM Interconnection, L.L.C.	Thomas Foster	Elizabeth Davis	Abstain	N/A
2	Southwest Power Pool, Inc. (RTO)	Joshua Phillips	Mia Wilson	Abstain	N/A
3	AEP	Jodi Yeary		Affirmative	N/A
3	Ameren - Ameren Services	David Jendras Sr	Nick Leathers	Abstain	N/A
3	APS - Arizona Public Service Co.	Jessica Lopez		Affirmative	N/A
3	Arkansas Electric Cooperative Corporation	Ayslynn Mcavoy		Abstain	N/A
3	Associated Electric Cooperative, Inc.	Todd Bennett		Affirmative	N/A

© 2026 - NERC Ver 4.2.1.0 Machine Name: ATLVPEROWEB01

Segment	Organization	Voter	Designated Proxy	Ballot	NERC Memo
3	Austin Energy	Lovita Griffin		None	N/A
3	Avista - Avista Corporation	Robert Follini		None	N/A
3	BC Hydro and Power Authority	Cameron Chung		Abstain	N/A
3	Berkshire Hathaway Energy - MidAmerican Energy Co.	Matthew Kloos		None	N/A
3	Black Hills Corporation	Josh Combs		Affirmative	N/A
3	Bonneville Power Administration	Ron Sporseen		Negative	No Comment Submitted
3	Buckeye Power, Inc.	Tom Schmidt	Ryan Strom	None	N/A
3	Central Electric Power Cooperative (Missouri)	Adam Weber		Affirmative	N/A
3	City Utilities of Springfield, Missouri	Jessica Morrissey		None	N/A
3	Colorado Springs Utilities	Hillary Dobson		Affirmative	N/A
3	Con Ed - Consolidated Edison Co. of New York	Arman Shiplu		Affirmative	N/A
3	Dominion - Dominion Virginia Power	Matt Bullard		Affirmative	N/A
3	Duke Energy - Florida Power Corporation	Marcelo Pesantez		Affirmative	N/A
3	Edison International - Southern California Edison Company	Todd Garwick		Affirmative	N/A
3	Entergy	James Keele		Affirmative	N/A
3	Evergy	Marcus Moor	Alan Kloster	Affirmative	N/A
3	Eversource Energy	Vicki O'Leary		Affirmative	N/A
3	Exelon	Kinte Whitehead		Affirmative	N/A
3	FirstEnergy - FirstEnergy Corporation	Aaron Ghodooshim		Affirmative	N/A

© 2026 - NERC Ver 4.2.1.0 Machine Name: ATLVPEROWEB01

Segment	Organization	Voter	Designated Proxy	Ballot	NERC Memo
3	Georgia System Operations Corporation	Naresh Latchman		Affirmative	N/A
3	Great River Energy	Joseph Gatten		Abstain	N/A
3	Imperial Irrigation District	Jorge Gutierrez		None	N/A
3	KAMO Electric Cooperative	Tony Gott		Affirmative	N/A
3	Lincoln Electric System	Sam Christensen		Abstain	N/A
3	Los Angeles Department of Water and Power	Fausto Serratos		Affirmative	N/A
3	M and A Electric Power Cooperative	Gary Dollins		Affirmative	N/A
3	MEAG Power	Roger Brand	Rebika Yitna	Affirmative	N/A
3	MGE Energy - Madison Gas and Electric Co.	Ken Bartz		Abstain	N/A
3	Muscatine Power and Water	Seth Shoemaker		Affirmative	N/A
3	National Grid USA	Brian Shanahan		Affirmative	N/A
3	Nebraska Public Power District	Kevin Schawang		Abstain	N/A
3	New York Power Authority	Richard Machado		Negative	No Comment Submitted
3	NextEra Energy - Florida Power and Light Co.	Karen Demos		None	N/A
3	NiSource - Northern Indiana Public Service Co.	Steven Taddeucci		Negative	No Comment Submitted
3	Northeast Missouri Electric Power Cooperative	Skyler Wiegmann		Affirmative	N/A
3	Northern California Power Agency	Michael Whitney	Chris Carnesi	None	N/A
3	NW Electric Power Cooperative, Inc.	Heath Henry		Affirmative	N/A

© 2026 - NERC Ver 4.2.1.0 Machine Name: ATLVPEROWEB01

Segment	Organization	Voter	Designated Proxy	Ballot	NERC Memo
3	OGE Energy - Oklahoma Gas and Electric Co.	Donald Hargrove		Affirmative	N/A
3	Omaha Public Power District	David Heins		Affirmative	N/A
3	Orlando Utilities Commission	Ballard Mutters		None	N/A
3	Pacific Gas and Electric Company	Sandra Ellis	Bob Cardle	Negative	No Comment Submitted
3	Platte River Power Authority	Richard Kiess		None	N/A
3	Portland General Electric Co.	Mayra Franco		None	N/A
3	PPL - Louisville Gas and Electric Co.	James Frank		None	N/A
3	PSEG - Public Service Electric and Gas Co.	Christopher Murphy		None	N/A
3	Public Utility District No. 1 of Chelan County	Joyce Gundry		Negative	No Comment Submitted
3	Puget Sound Energy, Inc.	Kelley Sargent		Affirmative	N/A
3	Sacramento Municipal Utility District	Nicole Looney	Tim Kelley	None	N/A
3	Salt River Project	Jennifer Bennett	Timothy Singh	Negative	No Comment Submitted
3	Santee Cooper	Marty Watson		Abstain	N/A
3	Seminole Electric Cooperative, Inc.	Lewis Snyder		Negative	No Comment Submitted
3	Sempra - San Diego Gas and Electric	Bryan Bennett		Negative	No Comment Submitted
3	Sho-Me Power Electric Cooperative	Jarrod Maninger		Affirmative	N/A

Segment	Organization	Voter	Designated Proxy	Ballot	NERC Memo
3	Snohomish County PUD No. 1	Holly Chaney		Negative	No Comment Submitted
3	Southern Company - Alabama Power Company	Joel Dembowski		Affirmative	N/A
3	Southern Indiana Gas and Electric Co.	Ryan Snyder		Affirmative	N/A
3	Tennessee Valley Authority	Justin Kuhlers		None	N/A
3	Tri-State G and T Association, Inc.	Amanda Skubal		Affirmative	N/A
3	TXNM Energy	Scott Thompson		Affirmative	N/A
4	Alliant Energy Corporation Services, Inc.	Angela Dockter	Lexi Dobrzysnki	None	N/A
4	Arkansas Electric Cooperative Corporation	Jenni Sudduth		None	N/A
4	Buckeye Power, Inc.	Jason Procuniar	Ryan Strom	None	N/A
4	City Utilities of Springfield, Missouri	Jerry Bradshaw		Affirmative	N/A
4	FirstEnergy - FirstEnergy Corporation	Sarah Miller		Affirmative	N/A
4	Georgia System Operations Corporation	Katrina Lyons		Affirmative	N/A
4	Northern California Power Agency	Marty Hostler		None	N/A
4	Oklahoma Municipal Power Authority	Michael Watt		None	N/A
4	Public Utility District No. 1 of Snohomish County	Kristen Eyman		None	N/A
4	Public Utility District No. 2 of Grant County, Washington	Karla Weaver		Abstain	N/A
4	Sacramento Municipal Utility District	Foung Mua	Tim Kelley	None	N/A
4	Utility Services, Inc.	Carver Powers		Affirmative	N/A

© 2026 - NERC Ver 4.2.1.0 Machine Name: ATLVPEROWEB01

Segment	Organization	Voter	Designated Proxy	Ballot	NERC Memo
4	WEC Energy Group, Inc.	Candace Morakinyo		None	N/A
4	Western Power Pool	Kevin Conway		Abstain	N/A
5	AEP	Thomas Foltz		Affirmative	N/A
5	Ameren - Ameren Missouri	Sam Dwyer		Abstain	N/A
5	APS - Arizona Public Service Co.	Andrew Smith		Affirmative	N/A
5	Associated Electric Cooperative, Inc.	Chuck Booth		Affirmative	N/A
5	Austin Energy	Michael Dillard		Affirmative	N/A
5	Avista - Avista Corporation	Glen Farmer		Affirmative	N/A
5	BC Hydro and Power Authority	Vijay Raghunathan		Abstain	N/A
5	Berkshire Hathaway - NV Energy	Dwanique Spiller		Affirmative	N/A
5	Black Hills Corporation	Sheila Suurmeier		Affirmative	N/A
5	Buckeye Power, Inc.	Kevin Zemanek	Ryan Strom	None	N/A
5	California Department of Water Resources	ASM Mostafa		None	N/A
5	CMS Energy - Consumers Energy Company	David Greyerbiehl		Affirmative	N/A
5	Colorado Springs Utilities	Jeffrey Icke		Affirmative	N/A
5	Con Ed - Consolidated Edison Co. of New York	Michelle Pagano		Affirmative	N/A
5	Constellation	Marie Potter	Jamie Monette	Abstain	N/A
5	Cowlitz County PUD	Garrett Colkitt		None	N/A
5	Dairyland Power Cooperative	Tommy Drea		None	N/A
5	Dominion - Dominion Resources, Inc.	Barbara Marion		Affirmative	N/A

© 2026 - NERC Ver 4.2.1.0 Machine Name: ATLVPEROWEB01

Segment	Organization	Voter	Designated Proxy	Ballot	NERC Memo
5	DTE Energy	George Goddard		None	N/A
5	Duke Energy	Dale Goodwine		Affirmative	N/A
5	Edison International - Southern California Edison Company	Robert Blackney		Affirmative	N/A
5	Electric Power Supply Association	Bill Zuretti		None	N/A
5	Entergy - Entergy Services, Inc.	Gail Golden		Affirmative	N/A
5	Evergy	Jeremy Harris	Alan Kloster	Affirmative	N/A
5	FirstEnergy - FirstEnergy Corporation	Matthew Augustin		Affirmative	N/A
5	Great River Energy	Jacalynn Bentz		Affirmative	N/A
5	Greybeard Compliance Services, LLC	Mike Gabriel		Abstain	N/A
5	Hydro-Quebec (HQ)	Junji Yamaguchi	Chantal Mazza	Affirmative	N/A
5	Imperial Irrigation District	Tino Zaragoza	Denise Sanchez	Affirmative	N/A
5	JEA	John Babik		Negative	No Comment Submitted
5	Lincoln Electric System	Brittany Millard		Abstain	N/A
5	Los Angeles Department of Water and Power	Robert Kerrigan		None	N/A
5	Lower Colorado River Authority	Joseph Scott		Affirmative	N/A
5	National Grid USA	Trishona Manganiello		Affirmative	N/A
5	NB Power Corporation - New Brunswick Power Transmission Corporation	David Melanson		Abstain	N/A
5	Nebraska Public Power District	Ronald Bender		Abstain	N/A

© 2026 - NERC Ver 4.2.1.0 Machine Name: ATLVPEROWEB01

Segment	Organization	Voter	Designated Proxy	Ballot	NERC Memo
5	New York Power Authority	Zahid Qayyum		Negative	No Comment Submitted
5	NextEra Energy	Richard Vendetti		Affirmative	N/A
5	NiSource - Northern Indiana Public Service Co.	Kathryn Tackett		Negative	No Comment Submitted
5	Northern California Power Agency	Jeremy Lawson	Chris Carnesi	None	N/A
5	NRG - NRG Energy, Inc.	Michael Scalise		Abstain	N/A
5	OGE Energy - Oklahoma Gas and Electric Co.	Patrick Wells		Affirmative	N/A
5	Oglethorpe Power Corporation	Donna Johnson		None	N/A
5	Oklahoma Municipal Power Authority	Patrick Tuttle		None	N/A
5	Omaha Public Power District	Kayleigh Wilkerson		Affirmative	N/A
5	OTP - Otter Tail Power Company	Laura Dewey		Affirmative	N/A
5	Pacific Gas and Electric Company	Tyler Brun	Bob Cardle	Negative	No Comment Submitted
5	Platte River Power Authority	Jim Grothmann		Affirmative	N/A
5	Portland General Electric Co.	Ryan Olson		Abstain	N/A
5	PPL - Louisville Gas and Electric Co.	Julie Hostrander		None	N/A
5	PSEG Nuclear LLC	Sharon Brown		None	N/A
5	Public Utility District No. 1 of Chelan County	Rebecca Wickel		Negative	No Comment Submitted

© 2026 - NERC Ver 4.2.1.0 Machine Name: ATLVPEROWEB01

Segment	Organization	Voter	Designated Proxy	Ballot	NERC Memo
5	Public Utility District No. 1 of Snohomish County	Becky Burden		Negative	No Comment Submitted
5	Sacramento Municipal Utility District	Ryder Couch	Tim Kelley	None	N/A
5	Salt River Project	Matthew Jaramilla	Timothy Singh	Negative	No Comment Submitted
5	Santee Cooper	Carey Salisbury		Abstain	N/A
5	Seminole Electric Cooperative, Inc.	Melanie Wong		None	N/A
5	Sempra - San Diego Gas and Electric	Jennifer Wright		Negative	No Comment Submitted
5	Southern Company - Southern Company Generation	Leslie Burke		Affirmative	N/A
5	Southern Indiana Gas and Electric Co.	Rob Collins		Affirmative	N/A
5	Tennessee Valley Authority	Darren Boehm		None	N/A
5	Tri-State G and T Association, Inc.	Sergio Banuelos		Affirmative	N/A
5	U.S. Bureau of Reclamation	Wendy Kalidass		Affirmative	N/A
5	Xcel Energy, Inc.	Gerry Huitt		Abstain	N/A
6	AEP	Randy Calhoun		Affirmative	N/A
6	Ameren - Ameren Services	Robert Quinlivan		Abstain	N/A
6	APS - Arizona Public Service Co.	Marcus Bortman		Affirmative	N/A
6	Arkansas Electric Cooperative Corporation	Bruce Walkup		Abstain	N/A
6	Associated Electric Cooperative, Inc.	Brian Ackermann		Affirmative	N/A

© 2026 - NERC Ver 4.2.1.0 Machine Name: ATLVPEROWEB01

Segment	Organization	Voter	Designated Proxy	Ballot	NERC Memo
6	Austin Energy	Imane Mrini		Affirmative	N/A
6	Berkshire Hathaway - PacifiCorp	Lindsay Wickizer		Affirmative	N/A
6	Black Hills Corporation	Rachel Schuldt		Affirmative	N/A
6	Bonneville Power Administration	Tanner Brier		Negative	No Comment Submitted
6	Con Ed - Consolidated Edison Co. of New York	Jason Chandler		Affirmative	N/A
6	Constellation	Laura Brignola		Abstain	N/A
6	Dominion - Dominion Resources, Inc.	Alex Bekashoff		Affirmative	N/A
6	Duke Energy	John Sturgeon		Affirmative	N/A
6	Edison International - Southern California Edison Company	Stephanie Kenny		Affirmative	N/A
6	Entergy	Julie Hall		Affirmative	N/A
6	Evergy	Tiffany Lake	Alan Kloster	Affirmative	N/A
6	FirstEnergy - FirstEnergy Corporation	Stacey Sheehan		Affirmative	N/A
6	Great River Energy	Brian Meloy		None	N/A
6	Imperial Irrigation District	Diana Torres	Denise Sanchez	Affirmative	N/A
6	Lincoln Electric System	Eric Ruskamp		Abstain	N/A
6	Los Angeles Department of Water and Power	Anton Vu		Affirmative	N/A
6	Muscatine Power and Water	Nicholas Burns		Affirmative	N/A
6	New York Power Authority	Shelly Dineen		Negative	No Comment Submitted
6	NextEra Energy - Florida Power and Light Co.	Justin Welty		Affirmative	N/A

© 2026 - NERC Ver 4.2.1.0 Machine Name: ATLVPEROWEB01

Segment	Organization	Voter	Designated Proxy	Ballot	NERC Memo
6	NiSource - Northern Indiana Public Service Co.	Eugene Johnson		Negative	No Comment Submitted
6	Northern California Power Agency	Dennis Sismaet	Chris Carnesi	None	N/A
6	OGE Energy - Oklahoma Gas and Electric Co.	Ashley F Stringer		Affirmative	N/A
6	Omaha Public Power District	Shonda Markus	David Ortiz	Affirmative	N/A
6	Platte River Power Authority	Sabrina Martz		None	N/A
6	Portland General Electric Co.	Stefanie Burke	Venessa Sneed	Abstain	N/A
6	Powerex Corporation	Raj Hundal		Abstain	N/A
6	PPL - Louisville Gas and Electric Co.	Jeremy Gesser		Abstain	N/A
6	PSEG - PSEG Energy Resources and Trade LLC	Laura Wu		None	N/A
6	Public Utility District No. 1 of Chelan County	Tamarra Hardie		Negative	No Comment Submitted
6	Sacramento Municipal Utility District	Charles Norton	Tim Kelley	None	N/A
6	Salt River Project	Israel Perez	Timothy Singh	Negative	No Comment Submitted
6	Santee Cooper	Richard Kirkpatrick		Abstain	N/A
6	Seattle City Light	Daren Brubaker		None	N/A
6	Seminole Electric Cooperative, Inc.	Bret Galbraith		None	N/A
6	Snohomish County PUD No. 1	Nima Miri		Negative	No Comment Submitted

© 2026 - NERC Ver 4.2.1.0 Machine Name: ATLVPEROWEB01

Segment	Organization	Voter	Designated Proxy	Ballot	NERC Memo
6	Southern Company - Southern Company Generation and Energy Marketing	Matthew O'neal		Affirmative	N/A
6	Southern Indiana Gas and Electric Co.	Kati Barr		Affirmative	N/A
6	Tennessee Valley Authority	Jeffrey Powell		Abstain	N/A
6	Western Area Power Administration	Jennifer Neville		Abstain	N/A
10	Midwest Reliability Organization	Tasha Ward		Negative	No Comment Submitted
10	New York State Reliability Council	Leka Gjonaj		None	N/A
10	Northeast Power Coordinating Council	Ruida Shu		Abstain	N/A
10	ReliabilityFirst	Tremayne Brown		Affirmative	N/A
10	SERC Reliability Corporation	Dave Krueger		None	N/A
10	Texas Reliability Entity, Inc.	Rachel Coyne		Affirmative	N/A
10	Western Electricity Coordinating Council	Steven Rueckert		None	N/A

Previous 1 Next

Showing 1 to 281 of 281 entries

© 2026 - NERC Ver 4.2.1.0 Machine Name: ATLVPEROWEB01

NERC
NORTH AMERICAN ELECTRIC RELIABILITY CORPORATION

Unofficial Comment Form

Project 2023-06 CIP-014 Risk Assessment Refinement

Be aware that this is a public proceeding, and comments are publicly available upon submission. DO NOT include any CEII or otherwise sensitive information in your comments.

Do not use this form for submitting comments. Use the Standards Balloting and Commenting System (SBS) to submit comments on draft three of **CIP-014-4 Physical Security** by **8 p.m. Eastern, Thursday, May 14, 2026.**

Additional information is available on the project page. If you have questions, contact Senior Standards Developer, Ben Wu (via email), or at 470-542-6882.

Background Information

Due to an increase in reports of physical attacks on electric substations, the Federal Energy Regulatory Commission (FERC) issued the December 2022 Order in Docket No. RD23-2-000 directing NERC to evaluate the effectiveness of the Physical Security Reliability Standard CIP-014-3 in mitigating the risks to the Bulk-Power System associated with physical attacks. In the report filed in response to a FERC directive, NERC staff identified continuing inconsistency in registered entity CIP-014-3 risk assessments to most appropriately identify critical infrastructure. FERC directed NERC to evaluate whether the physical security protection requirements in NERC's Reliability Standards are adequate to address the risks associated with physical attacks on Bulk-Power System Facilities, including the adequacy of the required risk assessment in CIP-014-3 Requirement R1. In the report, NERC found that CIP-014-3 required revision to assure adequate and consistent approach in evaluating instability as well as the identification of infrastructure critical to the operation of the Bulk-Power System.

Questions

1. Do you agree with the modifications made in CIP-014-4 with modified Requirement R1 to address the issues identified in the standard authorization request (SAR)? If you do not agree, please provide your recommendation and, if appropriate, technical or procedural justification.

   ☐ Yes
   ☐ No

   Comments:

2. Do you agree with the modifications made in CIP-014-4 with new Requirement R2 to address the issues identified in the SAR? If you do not agree, please provide your recommendation and, if appropriate, technical or procedural justification.

   ☐ Yes
   ☐ No

   Comments:

3. Do you agree with the modifications made in CIP-014-4 with new Requirement R3 to address the issues identified in the SAR? If you do not agree, please provide your recommendation and, if appropriate, technical or procedural justification.

   ☐ Yes
   ☐ No

   Comments:

4. Do you agree with the modifications made in CIP-014-4 with new Requirement R4 to address the issues identified in the SAR? If you do not agree, please provide your recommendation and, if appropriate, technical or procedural justification.

   ☐ Yes
   ☐ No

   Comments:

5. Do you agree with the modifications made in CIP-014-4 with adding Requirement R5 to address the issues identified in the SAR? If you do not agree, please provide your recommendation and, if appropriate, technical or procedural justification.

   ☐ Yes
   ☐ No

   Comments:

6. Do you agree with the Implementation Plan for CIP-014-4? If you think an alternate timeframe is needed, please propose an alternate implementation plan with a detailed explanation.

   ☐ Yes
   ☐ No

   Comments:

7. Do you believe there are alternatives or more cost-effective options to address the recommendations in CIP-014-4 to address the reliability issue of physical security? If so, please provide your recommendation and, if appropriate, technical, or procedural justification.

   ☐ Yes
   ☐ No

   Comments:

8. Provide any additional comments for the drafting team to consider, if desired.

   Comments:

Standards Announcement

Project 2023-06 CIP-014 Risk Assessment Refinement
CIP-014-4

Be aware that this is a public proceeding, and comments are publicly available upon submission. DO NOT include any CEII or otherwise sensitive information in your comments.

Formal Comment Period Open through May 14, 2026

Now Available

A 45-day formal comment period for draft three of **CIP-014-4 Physical Security**, is open through **8 p.m. Eastern, Thursday, May 14, 2026**.

The drafting team's considerations of the responses received from the previous comment period are reflected in this draft of the standard.

Reminder Regarding Corporate RBB Memberships

Under the NERC Rules of Procedure, each entity and its affiliates is collectively permitted one voting membership per Registered Ballot Body Segment. Each entity that undergoes a change in corporate structure (such as a merger or acquisition) that results in the entity or affiliated entities having more than the one permitted representative in a particular Segment must withdraw the duplicate membership(s) prior to joining new ballot pools or voting on anything as part of an existing ballot pool. Contact ballotadmin@nerc.net to assist with the removal of any duplicate registrations.

Commenting

Use the Standards Balloting and Commenting System (SBS) to submit comments. An unofficial Word version of the comment form is posted on the project page.

- *Contact NERC IT support directly at https://support.nerc.net/ (Monday – Friday, 8 a.m. - 5 p.m. Eastern) for problems regarding accessing the SBS due to a forgotten password, incorrect credential error messages, or system lock-out.*
- *Passwords expire every **6 months** and must be reset.*
- *The SBS **is not** supported for use on mobile devices.*
- *Please be mindful of ballot and comment period closing dates. We ask to **allow at least 48 hours** for NERC support staff to assist with inquiries. Therefore, it is recommended that users try logging into their SBS accounts **prior to the last day** of a comment/ballot period.*

Next Steps

Additional ballots for the standard and Implementation Plan, as well as a non-binding poll of the associated Violation Risk Factors and Violation Severity Levels, will be conducted **May 5 - May 14, 2026**.

For more information on the Standards Development Process, refer to the Standard Processes Manual.

For more information or assistance, please contact **Ben Wu** via email or at **470-542-6882**. Subscribe to this project's observer mailing list by logging into EasyVista using your ERO portal account. Select "Mailing List Requests" at the bottom of the screen, then click "Create Request" under the "Standards Team Lists" section. Specify "Project 2023-06 CIP-014 - Risk Assessment Refinement observer list" in the Description Box.

NOTE: To create an ERO account, go to the ERO Portal and register for a new account.

Comment Report

Project Name:	2023-06 CIP-014 Risk Assessment Refinement | Draft 4
Comment Period Start Date:	3/31/2026
Comment Period End Date:	5/14/2026
Associated Ballots:	Project 2023-06 CIP-014 Risk Assessment Refinement CIP-014-4 | Non-Binding Poll AB 4 NB Project 2023-06 CIP-014 Risk Assessment Refinement CIP-014-4 AB 4 ST Project 2023-06 CIP-014 Risk Assessment Refinement Implementation Plan AB 4 OT

There were 69 sets of responses, including comments from approximately 150 different people from approximately 95 companies representing 8 of the Industry Segments as shown in the table on the following pages.

Questions

1. Do you agree with the modifications made in CIP-014-4 with modified Requirement R1 to address the issues identified in the standard authorization request (SAR)? If you do not agree, please provide your recommendation and, if appropriate, technical or procedural justification.

2. Do you agree with the modifications made in CIP-014-4 with new Requirement R2 to address the issues identified in the SAR? If you do not agree, please provide your recommendation and, if appropriate, technical or procedural justification.

3. Do you agree with the modifications made in CIP-014-4 with new Requirement R3 to address the issues identified in the SAR? If you do not agree, please provide your recommendation and, if appropriate, technical or procedural justification.

4. Do you agree with the modifications made in CIP-014-4 with new Requirement R4 to address the issues identified in the SAR? If you do not agree, please provide your recommendation and, if appropriate, technical or procedural justification.

5. Do you agree with the modifications made in CIP-014-4 with adding Requirement R5 to address the issues identified in the SAR? If you do not agree, please provide your recommendation and, if appropriate, technical or procedural justification.

6. Do you agree with the Implementation Plan for CIP-014-4? If you think an alternate timeframe is needed, please propose an alternate implementation plan with a detailed explanation.

7. Do you believe there are alternatives or more cost-effective options to address the recommendations in CIP-014-4 to address the reliability issue of physical security? If so, please provide your recommendation and, if appropriate, technical, or procedural justification.

8. Provide any additional comments for the drafting team to consider, if desired.

Organization Name	Name	Segment(s)	Region	Group Name	Group Member Name	Group Member Organization	Group Member Segment(s)	Group Member Region
MRO	Anna Martinson	1,2,3,4,5,6	MRO	MRO Group	Shonda Markus	Omaha Public Power District (OPPD)	1,3,5,6	MRO
					Jamison Cawley	Nebraska Public Power District	1,3,5	MRO
					Jay Sethi	Manitoba Hydro (MH)	1,3,5,6	MRO
					George Brown	Pattern Operators LP	5	MRO
					Seth Shoemaker	Muscatine Power & Water	1,3,5,6	MRO
					Angela Wheat	Southwestern Power Administration	1	MRO
					Joshua Phillips	Southwest Power Pool	2	MRO
					Patrick Tuttle	Oklahoma Municipal Power Authority	4,5	MRO
					Hayden Maples	Evergy	1,3,5,6	MRO
					Kirsten Rowley	MISO	2	MRO
					Andrew Coffelt	Kansas City Board of Public Utilities	1,3,5,6	MRO
					Rockeish Mckenzie	Invenergy	5,6	MRO
					Shawna Satterwhite	Oklahoma Gas and Electric	1,3,5,6	MRO
					Husam Al-Hadidi	Manitoba Hydro	1,3,5,6	MRO
Exelon	Daniel Gacek	1		Exelon	Daniel Gacek	Exelon	1	RF
					Kinte Whitehead	Exelon	3	RF
ACES Power Marketing	Jodirah Green	1,3,4,5,6	MRO,NPCC,RF,SERC,Texas RE,WECC	ACES Collaborators	James Shultz	Hoosier Energy Electric Cooperative	1	RF
					Jason Procuniar	Buckeye Power, Inc.	4	RF
					Kylee Kropp	Sunflower Electric Power Corporation	1	MRO
					Kelly Heims	Central Iowa Power Cooperative	1	MRO
Great River Energy	Joseph Gatten	3		Great River Energy	Joseph Gatten	Great River Energy	1	MRO
					Joseph Gatten	Great River Energy	3	MRO
					Joseph Gatten	Great River Energy	5	MRO

					Joseph Gatten	Great River Energy	6	MRO
Eversource Energy	Joshua London	1		Eversource	Joshua London	Eversource Energy	1	NPCC
					Vicki O'Leary	Eversource Energy	3	NPCC
Midcontinent ISO, Inc.	Kirsten Rowley	2		ISO/RTO Council (IRC) Standards Review Committee (SRC)	Elizabeth Davis	PJM	2	RF
					Kirsten Rowley	Midcontinent ISO, Inc.	2	RF
					John Pearson	ISO-NE	2	NPCC
					Gregory Campoli	New York Independent System Operator	2	NPCC
					Joshua Phillips	Southwest Power Pool, Inc. (RTO)	2	MRO
					Kennedy Meier	ERCOT	2	Texas RE
					Jamie Johnson	California ISO	2	WECC
					Kathryn Kuber	Alberta Electric System Operator	2	NPCC
Dominion - Dominion Virginia Power	Matt Bullard	3		Dominion Energy	Matt Bullard	Dominion Energy	3	SERC
					Barbara Marion	Dominion Energy	5	SERC
					Alex Bekashoff	Dominion Energy	6	SERC
					Steven Belle	Dominion Energy	1	SERC
Black Hills Corporation	Rachel Schuldt	6		Black Hills Corporation - All Segments	Trevor Rombough	Black Hills Corporation	1	WECC
					Josh Combs	Black Hills Corporation	3	WECC
					Rachel Schuldt	Black Hills Corporation	6	WECC
					Carly Miller	Black Hills Corporation	5	WECC
					Sheila Suurmeier	Black Hills Corporation	5	WECC
Northeast Power Coordinating Council	Ruida Shu	10	NPCC	NPCC RSC	Gerry Dunbar	Northeast Power Coordinating Council	10	NPCC
					Deidre Altobell	Con Edison	1	NPCC
					Michele Tondalo	United Illuminating Co.	1	NPCC
					Stephanie Ullah-Mazzuca	Orange and Rockland	1	NPCC
					Michael Ridolfino	Central Hudson Gas & Electric Corp.	1	NPCC

Randy Buswell	Vermont Electric Power Company	1	NPCC
James Grant	NYISO	2	NPCC
Dermot Smyth	Con Ed - Consolidated Edison Co. of New York	1	NPCC
David Burke	Orange and Rockland	3	NPCC
Salvatore Spagnolo	New York Power Authority	1	NPCC
Sean Bodkin	Dominion - Dominion Resources, Inc.	6	NPCC
Silvia Mitchell	NextEra Energy - Florida Power and Light Co.	1	NPCC
Sean Cavote	PSEG	4	NPCC
Jason Chandler	Con Edison	5	NPCC
Shivaz Chopra	New York Power Authority	6	NPCC
Vijay Puran	New York State Department of Public Service	6	NPCC
David Kiguel	Independent	7	NPCC
Joel Charlebois	AESI	7	NPCC
Joshua London	Eversource Energy	1	NPCC
Joel Charlebois	AESI	7	NPCC
John Hastings	National Grid	1	NPCC
Erin Wilson	NB Power	1	NPCC
James Grant	NYISO	2	NPCC
Michael Couchesne	ISO-NE	2	NPCC
Kurtis Chong	IESO	2	NPCC
Michele Pagano	Con Edison	4	NPCC
Bendong Sun	Bruce Power	4	NPCC
Carvers Powers	Utility Services	5	NPCC
Wes Yeomans	NYSRC	7	NPCC
Emma Halilovic	Hydro One	1,3	NPCC
Philip Nichols	National Grid	1	NPCC

					Emma Halilovic	Hydro One	1,3	NPCC
					Caver Powers	Utility Services	5	NPCC
FirstEnergy - FirstEnergy Corporation	Sarah Miller	4		FE Voters	Theresa Ciancio	FirstEnergy - FirstEnergy Corporation	1	RF
					Aaron Ghodooshim	FirstEnergy - FirstEnergy Corporation	3	RF
					Matthew Augustin	FirstEnergy - FirstEnergy Corporation	5	RF
					Stacey Sheehan	FirstEnergy - FirstEnergy Corporation	6	RF
Public Utility District No. 1 of Chelan County	Tamarra Hardie	6		CHPD	Joyce Gundry	Public Utility District No. 1 of Chelan County	3	WECC
					Rebecca Zahler	Public Utility District No. 1 of Chelan County	5	WECC
					Maggie Bravo	Public Utility District No. 1 of Chelan County	1	WECC

1. Do you agree with the modifications made in CIP-014-4 with modified Requirement R1 to address the issues identified in the standard authorization request (SAR)? If you do not agree, please provide your recommendation and, if appropriate, technical or procedural justification.

Alyssia Rhoads - Public Utility District No. 1 of Snohomish County - 1	
Answer	No
Document Name	
Comment	

SNPD strongly disagrees with the adoption of a 36-month assessment interval for utilities that have not previously identified any applicable Transmission stations or substations. Reducing the assessment frequency from 60 months to 36 months would increase the study burden and associated costs for these entities, without providing any demonstrated benefit to the reliability of the Bulk Electric System (BES).

SNPD instead proposes retaining the existing 60-month assessment requirement for entities that have not identified applicable assets. This requirement should continue to include Transmission stations and substations that are planned to be placed in service within the next 60 calendar months.

Likes 0	
Dislikes 0	
Response	

Jeffrey Streifling - NB Power Corporation - 1	
Answer	No
Document Name	
Comment	

NPCC RSC suggest adding the 3rd paragraph of the technical rationale to R1. “TOs shall review and, if necessary, update the list of applicable Transmission station(s) or Transmission substation(s) per Attachment 1 at least once every 36 calendar months. The list of applicable Transmission station(s) or Transmission substation(s) shall include existing Facilities and Transmission station(s) and Transmission substation(s) planned to be in service within 36 calendar months. The 36 calendar months risk assessment study cycle aligns with the 36 calendar months planned-to-be-in-service date. "Planned to be in-service" should be taken to mean all Transmission station(s) and Transmission substation(s) as modeled in the base cases for the Near-Term Transmission Planning Horizon”.

The draft references facilities “planned to be in service within 36 months,” but does not describe the basis for making that determination. The Technical Rationale ties this concept to facilities included in Near-Term Transmission Planning base cases; however, this connection is not reflected in the standard language. Incorporating this clarification directly into the standard could enhance clarity and promote consistent application of the requirement.

Likes 0	
Dislikes 0	
Response	

Zahid Qayyum - New York Power Authority - 5	
Answer	No
Document Name	
Comment	
NYPA Supports NPCC RSC TFIST Comments.	
Likes 0	
Dislikes 0	
Response	

Daniel Valle - New York Power Authority - 1	
Answer	No
Document Name	
Comment	
NYPA supports the comments submitted by NPCC RSC.	
Likes 0	
Dislikes 0	
Response	

Isidoro Behar - Long Island Power Authority - 1	
Answer	No
Document Name	
Comment	

Question for the SDT: Considering the Measure 1 verbiage (“evidence may include, but are not limited to, dated written or electronic documentation of the Transmission station(s) and Transmission substation(s) (existing and those planned to be in service within 36 calendar months) that meet any of the criteria in Attachment 1.”), what action is needed to demonstrate compliance with respect to “identifying” applicable stations, and what notification(s) is needed? Our observation is that the Req #1 verbiage and the Measure 1 verbiage do not align.

Additionally, we observe that the term “applicable” station is introduced in Req# 1 and is used throughout the standard. The term “proximate” station is introduced in Req #2 and is referred to in Reqs 3.3 and 5. Based on this revision to the standard, these are two distinct sets of stations (applicable and proximate). We observe that for a few requirements / sub-requirements, there may be a possible gap or point of confusion as to whether a proximate station needs to meet the requirement / sub-requirement.

As a general comment, we recommend that the specific use of both of these terms be reviewed in fine detail to ensure that there will be no confusion as to whether a requirement pertains to an applicable station, a proximate station, or to both.

The draft references facilities “planned to be in service within 36 months,” but does not describe the basis for making that determination. The Technical Rationale ties this concept to facilities included in Near-Term Transmission Planning base cases; however, this connection is not reflected in the standard language. Incorporating this clarification directly into the standard could enhance clarity and promote consistent application of the requirement.

Likes 0	
Dislikes 0	

Response

Chantal Mazza - Chantal Mazza On Behalf of: Junji Yamaguchi, Hydro-Quebec (HQ), 1, 5; Nicolas Turcotte, Hydro-Quebec (HQ), 1, 5; - Chantal Mazza

Answer	No
Document Name	

Comment

Hydro-Québec supports the following NPCC RSC comments:

1. NPCC RSC suggest adding the 3rd paragraph of the technical rationale to R1. “TOs shall review and, if necessary, update the list of applicable Transmission station(s) or Transmission substation(s) per Attachment 1 at least once every 36 calendar months. The list of applicable Transmission station(s) or Transmission substation(s) shall include existing Facilities and Transmission station(s) and Transmission substation(s) planned to be in service within 36 calendar months. The 36 calendar months risk assessment study cycle aligns with the 36 calendar months planned-to-be-in-service date. "Planned to be in-service" should be taken to mean all Transmission station(s) and Transmission substation(s) as modeled in the base cases for the Near-Term Transmission Planning Horizon”.

The draft references facilities “planned to be in service within 36 months,” but does not describe the basis for making that determination. The Technical Rationale ties this concept to facilities included in Near-Term Transmission Planning base cases; however, this connection is not reflected in the standard language. Incorporating this clarification directly into the standard could enhance clarity and promote consistent application of the requirement.

2.

Requirement R1: “Each Transmission Owner, at least once every 36 calendar months, shall …”

Requirement R5: “At least once every 36 calendar months, each Transmission Owner shall …”

Suggest re-wording the beginning of Requirement R1 to align with the structure in R5.

Likes 0	
Dislikes 0	

Response

Matt Bullard - Dominion - Dominion Virginia Power - 3, Group Name Dominion Energy

Answer	No
Document Name	

Comment	
Determining what will be coming online in 36 months in the future may not be reasonably considered to be accurate. DE recommends 24 months.	
Likes 0	
Dislikes 0	
Response	
Ruida Shu - Northeast Power Coordinating Council - 10, Group Name NPCC RSC	
Answer	No
Document Name	
Comment	
NPCC RSC suggest adding the 3rd paragraph of the technical rationale to R1. “TOs shall review and, if necessary, update the list of applicable Transmission station(s) or Transmission substation(s) per Attachment 1 at least once every 36 calendar months. The list of applicable Transmission station(s) or Transmission substation(s) shall include existing Facilities and Transmission station(s) and Transmission substation(s) planned to be in service within 36 calendar months. The 36 calendar months risk assessment study cycle aligns with the 36 calendar months planned-to-be-in-service date. "Planned to be in-service" should be taken to mean all Transmission station(s) and Transmission substation(s) as modeled in the base cases for the Near-Term Transmission Planning Horizon”. The draft references facilities “planned to be in service within 36 months,” but does not describe the basis for making that determination. The Technical Rationale ties this concept to facilities included in Near-Term Transmission Planning base cases; however, this connection is not reflected in the standard language. Incorporating this clarification directly into the standard could enhance clarity and promote consistent application of the requirement. Requirement R1: “Each Transmission Owner, at least once every 36 calendar months, shall …” Requirement R5: “At least once every 36 calendar months, each Transmission Owner shall …” Suggest re-wording the beginning of Requirement R1 to align with the structure in R5.	
Likes 0	
Dislikes 0	
Response	
Constantin Chitescu - Ontario Power Generation Inc. - 5	
Answer	No
Document Name	
Comment	

OPG supports the following NPCC Regional Standards Committee's comments:

"NPCC RSC suggest adding the 3rd paragraph of the technical rationale to R1. "TOs shall review and, if necessary, update the list of applicable Transmission station(s) or Transmission substation(s) per Attachment 1 at least once every 36 calendar months. The list of applicable Transmission station(s) or Transmission substation(s) shall include existing Facilities and Transmission station(s) and Transmission substation(s) planned to be in service within 36 calendar months. The 36 calendar months risk assessment study cycle aligns with the 36 calendar months planned-to-be-in-service date. "Planned to be in-service" should be taken to mean all Transmission station(s) and Transmission substation(s) as modeled in the base cases for the Near-Term Transmission Planning Horizon".
The draft references facilities "planned to be in service within 36 months," but does not describe the basis for making that determination. The Technical Rationale ties this concept to facilities included in Near-Term Transmission Planning base cases; however, this connection is not reflected in the standard language. Incorporating this clarification directly into the standard could enhance clarity and promote consistent application of the requirement.
Requirement R1: "Each Transmission Owner, at least once every 36 calendar months, shall …"
Requirement R5: "At least once every 36 calendar months, each Transmission Owner shall …"
Suggest re-wording the beginning of Requirement R1 to align with the structure in R5."

Likes 0	
Dislikes 0	

Response

Misty Carneal - Duke Energy - 1,3,5,6 - SERC,RF

Answer	Yes
Document Name	

Comment

Duke Energy supports the modifications.

Likes 0	
Dislikes 0	

Response

Ronald Hoover - Bonneville Power Administration - 1,3,5,6 - WECC

Answer	Yes
Document Name	

Comment

BPA agrees with the modifications made for R1. A three-year calendar cycle is easier to follow. However, the new requirement could pose challenges for entities that have not previously identified critical substations, as it reduces the assessment period from 60 to 36 months.

Likes 0	
Dislikes 0	

Response	
Kelly Heims - Central Iowa Power Cooperative - 1	
Answer	Yes
Document Name	
Comment	
Central Iowa Power Cooperative supports the MRO's NERC Standards Review Forum (NSRF) and ACES comments for Question 1.	
Likes 0	
Dislikes 0	
Response	
Amy Casuscelli - Xcel Energy, Inc. - 1,3,5,6 - MRO,WECC	
Answer	Yes
Document Name	
Comment	
Xcel Energy supports EEI comments.	
Likes 1	Xcel Energy, Inc. , 6, Detmer Nicholas
Dislikes 0	
Response	
Rachel Schuldt - Black Hills Corporation - 6, Group Name Black Hills Corporation - All Segments	
Answer	Yes
Document Name	
Comment	
Black Hills Corporation agrees with the modifications for Requirement R1.	
Likes 0	
Dislikes 0	
Response	

Joseph Gatten - Great River Energy - 3, Group Name Great River Energy	
Answer	Yes
Document Name	
Comment	
No additional comment.	
Likes 0	
Dislikes 0	
Response	
Alan Kloster - Alan Kloster On Behalf of: Jeremy Harris, Evergy, 3, 5, 1, 6; Kevin Frick, Evergy, 3, 5, 1, 6; Marcus Moor, Evergy, 3, 5, 1, 6; Tiffany Lake, Evergy, 3, 5, 1, 6; - Alan Kloster	
Answer	Yes
Document Name	
Comment	
Evergy supports and incorporates by reference the comments of the Edison Electric Institute (EEI) for question #1.	
Likes 0	
Dislikes 0	
Response	
Dan Perry - TXNM Energy - 1,3,5 - WECC,Texas RE	
Answer	Yes
Document Name	
Comment	
TXNM Energy agrees with EEI submitted comments repeated below. EEI agrees with the modifications for Requirement R1. In the Technical Rationale for Requirement R1, EEI proposes omitting the strikethrough portion below since the Near-Term Transmission Planning Horizon (Year One through five) is greater than the 36 months prescribed in the standard. "Planned to be in-service" should be taken to mean all Transmission station(s) and Transmission substation(s) as modeled in the base cases **for the Near-Term Transmission Planning Horizon.**	
Likes 0	

Dislikes 0	

Response

Andrea Koch - Edison Electric Institute - NA - Not Applicable - NA - Not Applicable	
Answer	Yes
Document Name	

Comment
EEI agrees with the modifications for Requirement R1. In the Technical Rationale for Requirement R1, EEI proposes omitting the strikethrough portion below since the Near-Term Transmission Planning Horizon (Year One through five) is greater than the 36 months prescribed in the standard. "Planned to be in-service" should be taken to mean all Transmission station(s) and Transmission substation(s) as modeled in the base cases.

Likes 0	
Dislikes 0	

Response

Timothy Singh - Timothy Singh On Behalf of: Israel Perez, Salt River Project, 6, 3, 5, 1; Jennifer Bennett, Salt River Project, 6, 3, 5, 1; Laura Somak, Salt River Project, 6, 3, 5, 1; Matthew Jaramilla, Salt River Project, 6, 3, 5, 1; - Timothy Singh	
Answer	Yes
Document Name	

Comment
SRP agrees with R1 and the 36-month timeline but would need clarification on any planned station or substation not included in our latest analysis. A trigger-based element that has utilities create a reduced or trimmed-down analysis for compliance purposes for that specific site could be incorporated into the standard.

Likes 0	
Dislikes 0	

Response

Clay Walker - Clay Walker On Behalf of: Robert Hirchak, Cleco Corporation, 6, 5, 1, 3; - Clay Walker	
Answer	Yes
Document Name	

Comment

Cleco agrees with EEI comments.

Likes 0	
Dislikes 0	

Response

Nick Leathers - Nick Leathers On Behalf of: David Jendras Sr, Ameren - Ameren Services, 3, 6, 1; - Nick Leathers

Answer	Yes
Document Name	

Comment

Ameren believes that the requirements for the R1 study should be very prescriptive. The requirements are still up for interpretation, and different auditors may have different interpretations.

Likes 0	
Dislikes 0	

Response

Hayk Zargaryan - Edison International - Southern California Edison Company - 1

Answer	Yes
Document Name	

Comment

See comments submitted by Edison Electric Institute.

Likes 0	
Dislikes 0	

Response

Todd Garwick - Edison International - Southern California Edison Company - 3

Answer	Yes
Document Name	

Comment

See comments submitted by Edison Electric Institute

Likes 0	
Dislikes 0	

Response

Lori Frisk - Lori Frisk On Behalf of: Hillary Creurer, Allete - Minnesota Power, Inc., 1; - Lori Frisk

Answer	Yes
Document Name	

Comment

Minesota Power supports EEI’s comments

Likes 0	
Dislikes 0	

Response

Daniel Gacek - Exelon - 1, Group Name Exelon

Answer	Yes
Document Name	

Comment

Exelon agrees with the modifications to Requirement R1.

Exelon also supports the EEI suggested edit to the Technical Rationale as stated below:

EEI agrees with the modifications for Requirement R1.

In the Technical Rationale for Requirement R1, EEI proposes omitting **"for the Near-Term Transmission Planning Horizon"** from the sentence below since the Near-Term Transmission Planning Horizon (Year One through five) is greater than the 36 months prescribed in the standard.

"Planned to be in-service" should be taken to mean all Transmission station(s) and Transmission substation(s) as modeled in the base cases."

Likes 0	
Dislikes 0	

Response

Stephanie Kenny - Edison International - Southern California Edison Company - 6

Answer	Yes
Document Name	
Comment	
See EEI Comments	
Likes 0	
Dislikes 0	
Response	
Dwanique Spiller - Berkshire Hathaway - NV Energy - 5	
Answer	Yes
Document Name	
Comment	
Likes 0	
Dislikes 0	
Response	
Donna Wood - Tri-State G and T Association, Inc. - 1	
Answer	Yes
Document Name	
Comment	
Likes 0	
Dislikes 0	
Response	
Jessica Cordero - Unisource - Tucson Electric Power Co. - 1	
Answer	Yes
Document Name	
Comment	

Likes 0	
Dislikes 0	
Response	
Amy Wilke - American Transmission Company, LLC - 1	
Answer	Yes
Document Name	
Comment	
Likes 0	
Dislikes 0	
Response	
Kevin Conway - Western Power Pool - 4	
Answer	Yes
Document Name	
Comment	
Likes 0	
Dislikes 0	
Response	
Tremayne Brown - ReliabilityFirst - 10	
Answer	Yes
Document Name	
Comment	
Likes 0	
Dislikes 0	
Response	
Rebika Yitna - Rebika Yitna On Behalf of: Roger Brand, MEAG Power, 3, 1; - Rebika Yitna	

Answer	Yes
Document Name	
Comment	
Likes 0	
Dislikes 0	
Response	
Matthew Nicklin - Southern Illinois Power Cooperative - 1,5 - SERC	
Answer	Yes
Document Name	
Comment	
Likes 0	
Dislikes 0	
Response	
Wendy Kalidass - U.S. Bureau of Reclamation - 5	
Answer	Yes
Document Name	
Comment	
Likes 0	
Dislikes 0	
Response	
Alison Nickells - NiSource - Northern Indiana Public Service Co. - 1	
Answer	Yes
Document Name	
Comment	
Likes 0	

Dislikes 0	
Response	
Karen Artola - CPS Energy - 1,3,5 - Texas RE	
Answer	Yes
Document Name	
Comment	
Likes 0	
Dislikes 0	
Response	
Anna Martinson - MRO - 1,2,3,4,5,6 - MRO, Group Name MRO Group	
Answer	Yes
Document Name	
Comment	
Likes 0	
Dislikes 0	
Response	
Stephen Stafford - Stephen Stafford On Behalf of: Greg Davis, Georgia Transmission Corporation, 1; - Stephen Stafford	
Answer	Yes
Document Name	
Comment	
Likes 0	
Dislikes 0	
Response	
Tasha Ward - Midwest Reliability Organization - 10	
Answer	Yes

Document Name	
Comment	
Likes 0	
Dislikes 0	
Response	
Bob Cardle - Bob Cardle On Behalf of: Marco Rios, Pacific Gas and Electric Company, 3, 1, 5; Sandra Ellis, Pacific Gas and Electric Company, 3, 1, 5; Tyler Brun, Pacific Gas and Electric Company, 3, 1, 5; - Bob Cardle	
Answer	Yes
Document Name	
Comment	
Likes 0	
Dislikes 0	
Response	
Sarah Miller - FirstEnergy - FirstEnergy Corporation - 4, Group Name FE Voters	
Answer	Yes
Document Name	
Comment	
Likes 0	
Dislikes 0	
Response	
Tamarra Hardie - Public Utility District No. 1 of Chelan County - 6, Group Name CHPD	
Answer	Yes
Document Name	
Comment	
Likes 0	

Dislikes 0	
Response	
Jennifer Wright - Sempra - San Diego Gas and Electric - 5	
Answer	Yes
Document Name	
Comment	
Likes 0	
Dislikes 0	
Response	
Katrina Lyons - Georgia System Operations Corporation - 4	
Answer	Yes
Document Name	
Comment	
Likes 0	
Dislikes 0	
Response	
TRACEY JOHNSON - Southern Indiana Gas and Electric Co. - 3,5,6 - RF	
Answer	Yes
Document Name	
Comment	
Likes 0	
Dislikes 0	
Response	
Joshua London - Eversource Energy - 1, Group Name Eversource	
Answer	Yes

Document Name	
Comment	
Likes 0	
Dislikes 0	
Response	
Randy Peters - Manitoba Hydro - 1,3,5,6 - MRO	
Answer	Yes
Document Name	
Comment	
Likes 0	
Dislikes 0	
Response	
Thomas Brinckman - CenterPoint Energy Houston Electric, LLC - 1 - Texas RE	
Answer	Yes
Document Name	
Comment	
Likes 0	
Dislikes 0	
Response	
Oshara Narangoda - Oshara Narangoda On Behalf of: Aditya Menon, Hydro One Networks, Inc., 1; - Oshara Narangoda	
Answer	Yes
Document Name	
Comment	
Likes 0	
Dislikes 0	

Response	
Said Sidiqi - Tennessee Valley Authority - 1,3,5,6 - SERC	
Answer	Yes
Document Name	
Comment	
Likes 0	
Dislikes 0	
Response	
Nathan Browder - Nathan Browder On Behalf of: Matt Lewis, Lower Colorado River Authority, 1, 5; - Nathan Browder	
Answer	Yes
Document Name	
Comment	
Likes 0	
Dislikes 0	
Response	
Carver Powers - Utility Services, Inc. - 4	
Answer	Yes
Document Name	
Comment	
Likes 0	
Dislikes 0	
Response	
Jodirah Green - ACES Power Marketing - 1,3,4,5,6 - MRO,WECC,Texas RE,SERC,RF, Group Name ACES Collaborators	
Answer	Yes
Document Name	

Comment	
Likes 0	
Dislikes 0	
Response	
Rachel Coyne - Texas Reliability Entity, Inc. - 10	
Answer	Yes
Document Name	
Comment	
Likes 0	
Dislikes 0	
Response	
Gail Elliott - Gail Elliott On Behalf of: Michael Moltane, International Transmission Company Holdings Corporation, 1; - Gail Elliott	
Answer	Yes
Document Name	
Comment	
Likes 0	
Dislikes 0	
Response	
Jennifer Neville - Western Area Power Administration - 6	
Answer	Yes
Document Name	
Comment	
Likes 0	
Dislikes 0	
Response	

Joseph Scott - Lower Colorado River Authority - 5	
Answer	Yes
Document Name	
Comment	
Likes 0	
Dislikes 0	
Response	
Jodi Yeary - AEP - 3	
Answer	Yes
Document Name	
Comment	
Likes 0	
Dislikes 0	
Response	
Naresh Latchman - Georgia System Operations Corporation - 3	
Answer	Yes
Document Name	
Comment	
Likes 0	
Dislikes 0	
Response	
John Pearson - ISO New England, Inc. - 2	
Answer	Yes
Document Name	
Comment	

Likes 0	
Dislikes 0	
Response	
Laura Brignola - Constellation - 6	
Answer	
Document Name	
Comment	
Not Applicable to Constellation.	
Likes 0	
Dislikes 0	
Response	
Kirsten Rowley - Midcontinent ISO, Inc. - 2, Group Name ISO/RTO Council (IRC) Standards Review Committee (SRC)	
Answer	
Document Name	
Comment	
No comment.	
Likes 0	
Dislikes 0	
Response	
Khang Le - Seminole Electric Cooperative, Inc. - 1	
Answer	
Document Name	
Comment	
See comment in Question 8	
Likes 0	

Dislikes 0	
Response	
Lucinda Bradshaw - Lucinda Bradshaw On Behalf of: Byron Booker, Oncor Electric Delivery, 1; - Lucinda Bradshaw	
Answer	
Document Name	
Comment	
Oncor Electric Delivery Company LLC has no new comments on the most recent revisions shown in 2023-06-cip-014-4-redline-to-last-posted-03312026.docx. Instead, Oncor incorporates by reference here its previous comments submitted herein on November 5, 2024 and July 21, 2025.	
Likes 0	
Dislikes 0	
Response	

2. Do you agree with the modifications made in CIP-014-4 with new Requirement R2 to address the issues identified in the SAR? If you do not agree, please provide your recommendation and, if appropriate, technical or procedural justification.

Constantin Chitescu - Ontario Power Generation Inc. - 5

Answer	No
Document Name	

Comment

OPG supports the following NPCC Regional Standards Committee's comments:

"The Technical Rationale is very clear that proximate facilities identified under R2 are only intended to be used for the R5 risk assessment and the R6 third-party verification, and that they are not meant to carry forward into R7–R10.
R2 should clarify that existing or built "applicable Transmission station(s) or Transmission substation(s) identified in Requirement R1" shall be included in the proximity test. Planned substations may not have a fence line to measure against if they are not built yet.
The drafting team should clarify which fence line (property or substation) is the deciding fence line for the proximity rule and do entities have to coordinate with other entities.

Technical Rational for R2: "The Transmission station(s) or Transmission substation(s) identified in Requirement R2 are only intended for use in the Requirement R5 risk assessment and the Requirement R6 third-party verification to properly account for additional equipment that, if also damaged during an event, could lead to loss of additional Facilities. They are not intended to be subject to Requirements R7 through R10. Requirements R7 through R10 are only relevant for the Transmission substation(s) or Transmission substation(s) identified in Requirement R1."
The use of the word "Proximate" seem to intend an estimation and is at the discretion of the entity of what is a close Transmission Substation or Station. Then the requirement states a specific distance and a way to measure that distance. TFIST suggest removing the word "Proximate".
NPCC RSC suggest modifying R2 to read "Transmission station(s) and Transmission substation(s) identified in CIP-002". If the objective is to perform a separate process or analysis to identify applicable assets, then the assessment should occur in CIP-002."

Likes 0	
Dislikes 0	

Response

Ruida Shu - Northeast Power Coordinating Council - 10, Group Name NPCC RSC

Answer	No
Document Name	

Comment

The Technical Rationale is very clear that proximate facilities identified under R2 are only intended to be used for the R5 risk assessment and the R6 third-party verification, and that they are not meant to carry forward into R7–R10.

R2 should clarify that existing or built "applicable Transmission station(s) or Transmission substation(s) identified in Requirement R1" shall be included in the proximity test. Planned substations may not have a fence line to measure against if they are not built yet.

The drafting team should clarify which fence line (property or substation) is the deciding fence line for the proximity rule and do entities have to coordinate with other entities.

Technical Rational for R2: “The Transmission station(s) or Transmission substation(s) identified in Requirement R2 are only intended for use in the Requirement R5 risk assessment and the Requirement R6 third-party verification to properly account for additional equipment that, if also damaged during an event, could lead to loss of additional Facilities. They are not intended to be subject to Requirements R7 through R10. Requirements R7 through R10 are only relevant for the Transmission substation(s) or Transmission substation(s) identified in Requirement R1.”

The use of the word “Proximate” seem to intend an estimation and is at the discretion of the entity of what is a close Transmission Substation or Station. Then the requirement states a specific distance and a way to measure that distance. TFIST suggest removing the word “Proximate”.

NPCC RSC suggest modifying R2 to read “Transmission station(s) and Transmission substation(s) identified in CIP-002”. If the objective is to perform a separate process or analysis to identify applicable assets, then the assessment should occur in CIP-002.

Likes 0	
Dislikes 0	

Response

Gail Elliott - Gail Elliott On Behalf of: Michael Moltane, International Transmission Company Holdings Corporation, 1; - Gail Elliott

Answer	No
Document Name	

Comment

ITC supports the distance of 1500 feet or 457 meters (the shortest distance, measured substation fence line to substation fence line) selected by the drafting team for proximate Transmission station(s) and Transmission substation(s). However, we are concerned Transmission stations and Transmission substations owned by other entities who CIP-014 may or may not be applicable cannot be compelled to provide the information necessary for entities to comply with CIP-014. Further, while GIS tools can identify stations and substations within the specified proximity, it can be difficult to determine whose station they might be and if they are Transmission station(s) or Transmission substation(s)

ITC suggests narrowing the scope to existing BES Transmission station(s) and BES Transmission substation(s) which are owned by the applicable entity.

As an alternative, ITC suggests a requirement that neighboring TO’s must share the station name and GIS location on the necessary periodic basis to their neighboring TOs.

Likes 0	
Dislikes 0	

Response

Timothy Singh - Timothy Singh On Behalf of: Israel Perez, Salt River Project, 6, 3, 5, 1; Jennifer Bennett, Salt River Project, 6, 3, 5, 1; Laura Somak, Salt River Project, 6, 3, 5, 1; Matthew Jaramilla, Salt River Project, 6, 3, 5, 1; - Timothy Singh

Answer	No
Document Name	

Comment

SRP disagrees with R2. No voltage thresholds are mentioned for the proximate sites. Proximate sites can be smaller substations that TOs are responsible for, but that currently (or in the future) have no reason to be protected as larger BES sites. Clarification and direction are needed to determine which substations must comply with R2.

Likes 0	
Dislikes 0	

Response

Oshara Narangoda - Oshara Narangoda On Behalf of: Aditya Menon, Hydro One Networks, Inc., 1; - Oshara Narangoda

Answer	No
Document Name	

Comment

From Hydro One's perspective, the DHS–DOJ Bomb Threat Stand-Off Card (and the 457 m distance) isn't something that's formally adopted or standardized across Canadian jurisdictions. While it's a well-known U.S. reference, we'd see some challenges applying a specific, prescribed blast radius here without tying it back to Canadian authorities or local context.

Additionally, Our SMEs' main concern is that locking utilities into a fixed distance feels counter to a risk-based physical security program. Bomb threat scenarios are highly site-specific and defining a single radius could oversimplify things or even conflict with how a utility's threat and risk assessment is structured. In practice, we'd expect credible bomb threats to be evaluated through our existing Physical Security Threat Risk Assessment (PSTRA) process, with controls documented in the Physical Security Plan (PSP) where the risk justifies it.

Because of that, we generally favor language that allows utilities to define and justify their approach using a documented, risk-based process, informed by DHS/DOJ guidance or other relevant competent authorities, depending on jurisdiction.

Likes 0	
Dislikes 0	

Response

Chantal Mazza - Chantal Mazza On Behalf of: Junji Yamaguchi, Hydro-Quebec (HQ), 1, 5; Nicolas Turcotte, Hydro-Quebec (HQ), 1, 5; - Chantal Mazza

Answer	No
Document Name	

Comment

Hydro-Québec supports the following NPCC RSC comments:

The Technical Rationale is very clear that proximate facilities identified under R2 are only intended to be used for the R5 risk assessment and the R6 third-party verification, and that they are not meant to carry forward into R7–R10.

R2 should clarify that existing or built “applicable Transmission station(s) or Transmission substation(s) identified in Requirement R1” shall be included in the proximity test. Planned substations may not have a fence line to measure against if they are not built yet.

The drafting team should clarify which fence line (property or substation) is the deciding fence line for the proximity rule and do entities have to coordinate with other entities.

Technical Rational for R2: “The Transmission station(s) or Transmission substation(s) identified in Requirement R2 are only intended for use in the Requirement R5 risk assessment and the Requirement R6 third-party verification to properly account for additional equipment that, if also damaged during an event, could lead to loss of additional Facilities. They are not intended to be subject to Requirements R7 through R10. Requirements R7 through R10 are only relevant for the Transmission substation(s) or Transmission substation(s) identified in Requirement R1.”

The use of the word “Proximate” seem to intend an estimation and is at the discretion of the entity of what is a close Transmission Substation or Station. Then the requirement states a specific distance and a way to measure that distance. TFIST suggest removing the word “Proximate”.

NPCC RSC suggest modifying R2 to read “Transmission station(s) and Transmission substation(s) identified in CIP-002”. If the objective is to perform a separate process or analysis to identify applicable assets, then the assessment should occur in CIP-002.

Likes 0	
Dislikes 0	

Response

Isidoro Behar - Long Island Power Authority - 1

Answer	No
Document Name	

Comment

This Draft improves technical linkage between applicable and proximate stations, however it does not fully resolve the ambiguity regarding identification, scope, and compliance applicability. The standard still lacks clarity on:

- What constitutes "identification" under R1
- And whether proximate stations are subject to downstream requirements. The lack of clarity creates potential confusion regarding scope and compliance expectations, particularly when proximate stations are owned by different entities. (Technical Rationale for R2 clarifies that proximate Transmission stations are intended to be used only for R5 risk assessment and R6 third party verification, and are not intended to be subject to R7 through R10). To ensure consistency, recommendation is to incorporate this clarification directly into the requirement language to avoid any differing interpretations.
- We recommend that the drafting team review and standardize the use of "applicable" and "proximate" throughout the standard, and consider including a clear mapping or explanatory guidance indicating how each requirement applies to each category of station.

Likes 0	
Dislikes 0	

Response

Daniel Valle - New York Power Authority - 1

Answer	No

Document Name	
Comment	
NYPA supports the comments submitted by NPCC RSC.	
Likes 0	
Dislikes 0	
Response	
Zahid Qayyum - New York Power Authority - 5	
Answer	No
Document Name	
Comment	
NYPA Supports NPCC RSC TFIST Comments.	
Likes 0	
Dislikes 0	
Response	
Tamarra Hardie - Public Utility District No. 1 of Chelan County - 6, Group Name CHPD	
Answer	No
Document Name	
Comment	
While the Technical Rationale notes that facilities identified in R2 are only intended for use in R5 & R6 and not in R7-R10. This should be made clear within the standard language itself and not reliant on the use of the supplementary document. The technical rationale for R2 states that the 1500 feet requirement refers to the DHS-DOJ Bomb Threat Stand-off Card as justification for this distance. The Bomb Threat Card reflects personnel evacuation distances rather than infrastructure damage distances. CHPD recommends using damage-based distances supported by historical or technical research. Additionally, the measurement from substation fence line to substation fence line can present some unrealistic distance scenarios for CIP-014 assessments. For instance, a substation may have a large, fenced area with power equipment positioned within the fence perimeter in such a way that distances may exceed 1500 feet from the proposed event blast location to an adjacent or “proximate” facility. It is recommended to modify this language to be less prescriptive with this distance requirement and instead allow utilities to either: -use the provided R2 distance, whether that is the current revision’s 1500 ft requirement or a distance based upon damage distances (preferably one grounded in damage distances)	

OR

-allow utilities to select damage distance thresholds for identifying “proximate” stations based upon provided NERC guidance or DHS/DOJ/CISA resources for a variety of threat types but also require utilities to provide rationale within their CIP-014 methodologies and/or assessments for why they selected the specific distance threshold or excluded “proximate” stations from identification.

CHPD suggests removing the word 'proximate'. It is uncommon standard language, alternatives could be 'near' or 'nearby'.

Likes 0	
Dislikes 0	

Response

Jeffrey Streifling - NB Power Corporation - 1

Answer	No
Document Name	

Comment

The Technical Rationale is very clear that proximate facilities identified under R2 are only intended to be used for the R5 risk assessment and the R6 third-party verification, and that they are not meant to carry forward into R7–R10.

R2 should clarify that existing or built “applicable Transmission station(s) or Transmission substation(s) identified in Requirement R1” shall be included in the proximity test. Planned substations may not have a fence line to measure against if they are not built yet.

The drafting team should clarify which fence line (property or substation) is the deciding fence line for the proximity rule and do entities have to coordinate with other entities.

Technical Rational for R2: “The Transmission station(s) or Transmission substation(s) identified in Requirement R2 are only intended for use in the Requirement R5 risk assessment and the Requirement R6 third-party verification to properly account for additional equipment that, if also damaged during an event, could lead to loss of additional Facilities. They are not intended to be subject to Requirements R7 through R10. Requirements R7 through R10 are only relevant for the Transmission substation(s) or Transmission substation(s) identified in Requirement R1.”

The use of the word “Proximate” seem to intend an estimation and is at the discretion of the entity of what is a close Transmission Substation or Station. Then the requirement states a specific distance and a way to measure that distance. TFIST suggest removing the word “Proximate”.

NPCC RSC suggest modifying R2 to read “Transmission station(s) and Transmission substation(s) identified in CIP-002”. If the objective is to perform a separate process or analysis to identify applicable assets, then the assessment should occur in CIP-002.

Likes 0	
Dislikes 0	

Response

Bob Cardle - Bob Cardle On Behalf of: Marco Rios, Pacific Gas and Electric Company, 3, 1, 5; Sandra Ellis, Pacific Gas and Electric Company, 3, 1, 5; Tyler Brun, Pacific Gas and Electric Company, 3, 1, 5; - Bob Cardle

Answer	No

Document Name	

Comment

The new requirement to list any transmission station located within 1,500 ft of a candidate facility acknowledges the risk of multi-station, single-attack scenarios, yet the fixed distance appears arbitrary. To prevent over- or under-inclusion, particularly in dense urban corridors, PG&E recommends that NERC cite the threat analysis that produced the 1,500 ft figure and allow entities to justify an alternative distance where a quantified risk assessment demonstrates equivalent or better coverage. This added clarity will reduce regional interpretation disputes and avoid unnecessary modelling effort.

The requirement also presents substantial implementation challenges related to inter-utility coordination. Assessing the physical security implications of an attack on a neighboring utility's substation, particularly where no joint-ownership or operational agreement is already in place, will necessitate new formal data-sharing protocols and coordination mechanisms. This is likely to produce administrative complexity, delays in risk assessments, and disputes over sensitive information sharing. PG&E urges the NERC DT to provide specific guidance, or a recommended template for inter-utility agreements, to facilitate this critical coordination.

Likes 0	
Dislikes 0	

Response

Ronald Hoover - Bonneville Power Administration - 1,3,5,6 - WECC

Answer	No
Document Name	

Comment

BPA Transmission Planning generally agrees with the new Requirement R2 as it clearly defines the shortest distance of applicability for substations in proximity. However, there is concern that this limit might be too short, and a higher range of distance should be considered. Proximity substations owned by other utilities could be within 0.5-2 miles of each other, a distance that could be covered by physical attackers in a short span of time. Transmission Planning recommends using technically-supported damage distances or allowing utilities the flexibility to select and justify their own distances. Additionally, the use of the term "identify" is unclear; it is not obvious whether this requires documentation or ongoing tracking.

Likes 0	
Dislikes 0	

Response

Alyssia Rhoads - Public Utility District No. 1 of Snohomish County - 1

Answer	No
Document Name	

Comment

SNPD does not fully support the modifications made in new Requirement R2. SNPD requests clarification regarding which voltage classes are applicable for proximate Transmission stations and Transmission substations. The absence of a defined voltage threshold introduces ambiguity and

may result in the inclusion of facilities that are not relevant from a security perspective. To address this, SNPD recommends that Requirement R2 exclude Transmission stations and substations operating below 200 kV from being considered proximate facilities.

Likes 0	
Dislikes 0	

Response

Stephanie Kenny - Edison International - Southern California Edison Company - 6

Answer	Yes
Document Name	

Comment

See EEI Comments

Likes 0	
Dislikes 0	

Response

Daniel Gacek - Exelon - 1, Group Name Exelon

Answer	Yes
Document Name	

Comment

Exelon agrees with the modifications made to Requirement R2.

Exelon also support the edit to the Technical Rationale suggested in the EEI comments.

Likes 0	
Dislikes 0	

Response

Lori Frisk - Lori Frisk On Behalf of: Hillary Creurer, Allete - Minnesota Power, Inc., 1; - Lori Frisk

Answer	Yes
Document Name	

Comment

Minesota Power supports EEI’s comments	
Likes 0	
Dislikes 0	
Response	
Todd Garwick - Edison International - Southern California Edison Company - 3	
Answer	Yes
Document Name	
Comment	
See comments submitted by Edison Electric Institute	
Likes 0	
Dislikes 0	
Response	
Hayk Zargaryan - Edison International - Southern California Edison Company - 1	
Answer	Yes
Document Name	
Comment	
See comments submitted by Edison Electric Institute.	
Likes 0	
Dislikes 0	
Response	
Clay Walker - Clay Walker On Behalf of: Robert Hirchak, Cleco Corporation, 6, 5, 1, 3; - Clay Walker	
Answer	Yes
Document Name	
Comment	
Cleco agrees with EEI comments.	

Likes 0	
Dislikes 0	
Response	
Andrea Koch - Edison Electric Institute - NA - Not Applicable - NA - Not Applicable	
Answer	Yes
Document Name	
Comment	

EEI agrees with the modification made to Requirement R2.

EEI recommends a minor revision to the Technical Rationale for Requirement R2:

“Requirements R7 through R10 are only relevant for the Transmission **station(s)** or Transmission substation(s) identified in Requirement R1.”

Likes 0	
Dislikes 0	
Response	
Dan Perry - TXNM Energy - 1,3,5 - WECC,Texas RE	
Answer	Yes
Document Name	
Comment	

TXNM Energy agrees with EEI submitted comments repeated below.

EEI agrees with the modification made to Requirement R2.

EEI recommends a minor revision to the Technical Rationale for Requirement R2:

“Requirements R7 through R10 are only relevant for the Transmission **sub**station(s) or Transmission substation(s) identified in Requirement R1.”

Likes 0	
Dislikes 0	
Response	
Alan Kloster - Alan Kloster On Behalf of: Jeremy Harris, Evergy, 3, 5, 1, 6; Kevin Frick, Evergy, 3, 5, 1, 6; Marcus Moor, Evergy, 3, 5, 1, 6; Tiffany Lake, Evergy, 3, 5, 1, 6; - Alan Kloster	

Answer	Yes
Document Name	
Comment	
Evergy supports and incorporates by reference the comments of the Edison Electric Institute (EEI) for question #2.	
Likes 0	
Dislikes 0	
Response	
Matt Bullard - Dominion - Dominion Virginia Power - 3, Group Name Dominion Energy	
Answer	Yes
Document Name	
Comment	
DE agrees with the modifications, but DE has concern that the rationale for 1500ft distance for proximity sites to be considered and applicable threats. The document “CIP-014-4_Technical Rationale Clean_03-031-2026” references the Department of Homeland Security (DHS) – Department of Justice (DOJ) Bomb Threat Stand-Off Card in regard to establishing the 1500ft distance. This reference was developed for establishing evacuation distances for human life safety in the event an explosive is found in a vehicle or other delivery method to allow for first responders to investigate. The impact of an explosive to human life versus substation components or an operations center are not the same. If the intent is to establish proximity site distances based on the “Mandatory Evacuation Distance, this is most closely aligned with the Semi-Trailer threat size which is multiple orders of magnitude higher than the maximum explosive size indicated in the 2026 Electricity Sector Design Basis Threat document from the E-ISAC. This explosive size is also orders of magnitude higher than design basis threat sizes typically utilized with the blast design community, especially within the United States. If the intent is to reference a smaller explosive size in the “Shelter-In-Place or Preferred Evacuation Distance” these are broad ranges and again based on human life safety, not substation component response to a threat size. In summary, the reference document is not appropriate for establishing stand-off distances (proximity distance relative to an explosive) or design basis threat explosive sizes for substations or operations centers. These should be established based on a specific design basis threat applicable to the industry and the response of the substation equipment or the operations center building to that threat size, as is standard practice with the blast design community.	
Likes 0	
Dislikes 0	
Response	
Joseph Gatten - Great River Energy - 3, Group Name Great River Energy	
Answer	Yes
Document Name	
Comment	

No additional comment.

Likes 0	
Dislikes 0	

Response

Randy Peters - Manitoba Hydro - 1,3,5,6 - MRO

Answer	Yes
Document Name	

Comment

Manitoba Hydro believes that having a clear distance threshold in Requirement R2 will be helpful from a compliance and audit perspective. However, we also believe TOs should have some flexibility to consider additional criteria beyond the 1500 feet hard limit separation distance. The goal is to protect against cascading outages; the strict 1,500-foot threshold may not reflect the actual diverse physical security risks at each site and may ignore surrounding terrain and shielding, including natural barriers.

In the Technical Rationale under R2, the last paragraph, it is recommended that SDT revise the paragraph as follows.

“The Transmission station(s) or Transmission substation(s) identified in Requirement R2 are only intended for use in the Requirement R5 risk assessment and the Requirement R6 third-party verification to properly account for additional BES Facilities that could be lost due to equipment damage that, if also damaged during an event

Likes 0	
Dislikes 0	

Response

Rachel Schuldt - Black Hills Corporation - 6, Group Name Black Hills Corporation - All Segments

Answer	Yes
Document Name	

Comment

Black Hills Corporation agrees with the modifications for Requirement R2.

Likes 0	
Dislikes 0	

Response

Amy Casuscelli - Xcel Energy, Inc. - 1,3,5,6 - MRO,WECC

Answer	Yes
Document Name	
Comment	
Xcel Energy supports EEI comments	
Likes 0	
Dislikes 0	
Response	
Kelly Heims - Central Iowa Power Cooperative - 1	
Answer	Yes
Document Name	
Comment	
Central Iowa Power Cooperative supports the MRO's NERC Standards Review Forum (NSRF) and ACES comments for Question 2.	
Likes 0	
Dislikes 0	
Response	
Misty Carneal - Duke Energy - 1,3,5,6 - SERC,RF	
Answer	Yes
Document Name	
Comment	
Duke Energy supports the modifications.	
Likes 0	
Dislikes 0	
Response	
John Pearson - ISO New England, Inc. - 2	
Answer	Yes
Document Name	

Comment	
Likes 0	
Dislikes 0	
Response	
Naresh Latchman - Georgia System Operations Corporation - 3	
Answer	Yes
Document Name	
Comment	
Likes 0	
Dislikes 0	
Response	
Jodi Yeary - AEP - 3	
Answer	Yes
Document Name	
Comment	
Likes 0	
Dislikes 0	
Response	
Joseph Scott - Lower Colorado River Authority - 5	
Answer	Yes
Document Name	
Comment	
Likes 0	
Dislikes 0	
Response	

Jennifer Neville - Western Area Power Administration - 6	
Answer	Yes
Document Name	
Comment	
Likes 0	
Dislikes 0	
Response	
Rachel Coyne - Texas Reliability Entity, Inc. - 10	
Answer	Yes
Document Name	
Comment	
Likes 0	
Dislikes 0	
Response	
Nick Leathers - Nick Leathers On Behalf of: David Jendras Sr, Ameren - Ameren Services, 3, 6, 1; - Nick Leathers	
Answer	Yes
Document Name	
Comment	
Likes 0	
Dislikes 0	
Response	
Jodirah Green - ACES Power Marketing - 1,3,4,5,6 - MRO,WECC,Texas RE,SERC,RF, Group Name ACES Collaborators	
Answer	Yes
Document Name	
Comment	

Likes 0	
Dislikes 0	
Response	
Carver Powers - Utility Services, Inc. - 4	
Answer	Yes
Document Name	
Comment	
Likes 0	
Dislikes 0	
Response	
Nathan Browder - Nathan Browder On Behalf of: Matt Lewis, Lower Colorado River Authority, 1, 5; - Nathan Browder	
Answer	Yes
Document Name	
Comment	
Likes 0	
Dislikes 0	
Response	
Said Sidiqi - Tennessee Valley Authority - 1,3,5,6 - SERC	
Answer	Yes
Document Name	
Comment	
Likes 0	
Dislikes 0	
Response	

Thomas Brinckman - CenterPoint Energy Houston Electric, LLC - 1 - Texas RE	
Answer	Yes
Document Name	
Comment	
Likes 0	
Dislikes 0	
Response	
Joshua London - Eversource Energy - 1, Group Name Eversource	
Answer	Yes
Document Name	
Comment	
Likes 0	
Dislikes 0	
Response	
TRACEY JOHNSON - Southern Indiana Gas and Electric Co. - 3,5,6 - RF	
Answer	Yes
Document Name	
Comment	
Likes 0	
Dislikes 0	
Response	
Katrina Lyons - Georgia System Operations Corporation - 4	
Answer	Yes
Document Name	
Comment	

Likes 0	
Dislikes 0	
Response	
Jennifer Wright - Sempra - San Diego Gas and Electric - 5	
Answer	Yes
Document Name	
Comment	
Likes 0	
Dislikes 0	
Response	
Sarah Miller - FirstEnergy - FirstEnergy Corporation - 4, Group Name FE Voters	
Answer	Yes
Document Name	
Comment	
Likes 0	
Dislikes 0	
Response	
Tasha Ward - Midwest Reliability Organization - 10	
Answer	Yes
Document Name	
Comment	
Likes 0	
Dislikes 0	
Response	
Stephen Stafford - Stephen Stafford On Behalf of: Greg Davis, Georgia Transmission Corporation, 1; - Stephen Stafford	

Answer	Yes
Document Name	
Comment	
Likes 0	
Dislikes 0	
Response	
Anna Martinson - MRO - 1,2,3,4,5,6 - MRO, Group Name MRO Group	
Answer	Yes
Document Name	
Comment	
Likes 0	
Dislikes 0	
Response	
Karen Artola - CPS Energy - 1,3,5 - Texas RE	
Answer	Yes
Document Name	
Comment	
Likes 0	
Dislikes 0	
Response	
Alison Nickells - NiSource - Northern Indiana Public Service Co. - 1	
Answer	Yes
Document Name	
Comment	
Likes 0	

Dislikes 0	
Response	
Wendy Kalidass - U.S. Bureau of Reclamation - 5	
Answer	Yes
Document Name	
Comment	
Likes 0	
Dislikes 0	
Response	
Matthew Nicklin - Southern Illinois Power Cooperative - 1,5 - SERC	
Answer	Yes
Document Name	
Comment	
Likes 0	
Dislikes 0	
Response	
Rebika Yitna - Rebika Yitna On Behalf of: Roger Brand, MEAG Power, 3, 1; - Rebika Yitna	
Answer	Yes
Document Name	
Comment	
Likes 0	
Dislikes 0	
Response	
Tremayne Brown - ReliabilityFirst - 10	
Answer	Yes

Document Name	
Comment	
Likes 0	
Dislikes 0	
Response	
Kevin Conway - Western Power Pool - 4	
Answer	Yes
Document Name	
Comment	
Likes 0	
Dislikes 0	
Response	
Amy Wilke - American Transmission Company, LLC - 1	
Answer	Yes
Document Name	
Comment	
Likes 0	
Dislikes 0	
Response	
Jessica Cordero - Unisource - Tucson Electric Power Co. - 1	
Answer	Yes
Document Name	
Comment	
Likes 0	
Dislikes 0	

Response	
Donna Wood - Tri-State G and T Association, Inc. - 1	
Answer	Yes
Document Name	
Comment	
Likes 0	
Dislikes 0	
Response	
Dwanique Spiller - Berkshire Hathaway - NV Energy - 5	
Answer	Yes
Document Name	
Comment	
Likes 0	
Dislikes 0	
Response	
Kennedy Meier - Electric Reliability Council of Texas, Inc. - 2	
Answer	
Document Name	
Comment	
ERCOT joins the comments submitted by the ISO/RTO Council (IRC) Standards Review Committee (SRC) and adopts them as its own.	
Likes 0	
Dislikes 0	
Response	
Lucinda Bradshaw - Lucinda Bradshaw On Behalf of: Byron Booker, Oncor Electric Delivery, 1; - Lucinda Bradshaw	
Answer	

Document Name	
Comment	
Oncor Electric Delivery Company LLC has no new comments on the most recent revisions shown in 2023-06-cip-014-4-redline-to-last-posted-03312026.docx. Instead, Oncor incorporates by reference here its previous comments submitted herein on November 5, 2024 and July 21, 2025.	
Likes 0	
Dislikes 0	
Response	
Khang Le - Seminole Electric Cooperative, Inc. - 1	
Answer	
Document Name	
Comment	
See comment in Question 8	
Likes 0	
Dislikes 0	
Response	
Kirsten Rowley - Midcontinent ISO, Inc. - 2, Group Name ISO/RTO Council (IRC) Standards Review Committee (SRC)	
Answer	
Document Name	
Comment	
The ISO/RTO Council (IRC) Standards Review Committee (SRC) recommends that the drafting team acknowledge within the Technical Rationale that the Transmission Owner might be the only entity that has the information needed to determine which Transmission stations or substations are within 1,500 feet or 457 meters of an applicable Transmission station or substation under Requirement R2. Consequently, entities performing unaffiliated third-party verifications under Requirement R6 may not be able to verify that a Transmission Owner has properly identified all Transmission stations or Transmission substations within 1,500 feet or 457 meters of applicable stations or substations identified under Requirement R1. As a result, these unaffiliated third parties may need to rely on data provided by the TO when no other data is available, which could undermine the usefulness of unaffiliated third-party verifications. Note: AESO, ISO-NE, and SPP abstain from these comments.	
Likes 0	
Dislikes 0	

Response
Laura Brignola - Constellation - 6
Answer
Document Name
Comment
Not Applicable to Constellation.
Likes 0
Dislikes 0
Response

3. Do you agree with the modifications made in CIP-014-4 with new Requirement R3 to address the issues identified in the SAR? If you do not agree, please provide your recommendation and, if appropriate, technical or procedural justification.

Alison Nickells - NiSource - Northern Indiana Public Service Co. - 1

Answer	No
Document Name	

Comment

Remove technically justified. 3.1. Sometimes values such as acceptable load loss are not based on technically justified values.

Likes 0	
Dislikes 0	

Response

Tasha Ward - Midwest Reliability Organization - 10

Answer	No
Document Name	

Comment

The language "A single justification may be used for multiple locations." does not prevent selection of least impactful attack or corresponding less severe Fault at multiple locations which could result in inappropriate Fault applications and may cause compliance as well as physical security gaps.

The physical attack criteria does not require selection of highest severity or most electrically impactful Fault, only a "high-severity physical attack" which leaves room for less severe physical attack selections and thus less impactful and incongruent Fault selections.

Three-phase to ground fault in part was used as a proxy in the past to identify the worst case scenario regardless of the physical attacks. The change in this draft allows Entities to select what may be more likely, but less severe, thus weakening the overall security as locations will be removed from requiring critical protections. The approach of selecting a Fault based on a credible high-severity physical attack increases the likelihood that the Fault could align with physical attacks identified in a Design Basis Threat (DBT) approach (one method to assess threats and risks) that have been observed at similar sites and circumstances, however it reduces the scope of severity of physical attacks that would be considered thus it reduces the scope of Faults that will be considered. This could result in discarding Faults that may occur due to more impactful physical attacks that could occur in the future and thus reduces resiliency to future threat escalations.

The approach of selecting Faults that align with credible high-severity physical attacks will require physical security expertise involvement in the risk assessment process, much earlier than in the current process, and will require closer coordination between physical security expertiese and power system studies expertise. This increases the risk that there is a lack of alignment and consistency of both physical attack selections at like stations and also types of Faults selected by differing Entities which will result in inconsistent applications of physical security measures.

The R3.3.3.1 language could be interpreted to prevent Entities from selecting more impactful or serious Faults since now the Faults need to align with a credible high-severity physical attack instead one that, while not currently likely, could occur in the future. This constraint may cause compliance liability while also potentially reducing physical security posture.

The above assessment by MRO related to R3.3.3 is perceived as a significant enough reduction of effectiveness to motivate voting negative for this draft.	
Likes 1	Jennie Wike, N/A, Wike Jennie
Dislikes 0	

Response

Bob Cardle - Bob Cardle On Behalf of: Marco Rios, Pacific Gas and Electric Company, 3, 1, 5; Sandra Ellis, Pacific Gas and Electric Company, 3, 1, 5; Tyler Brun, Pacific Gas and Electric Company, 3, 1, 5; - Bob Cardle

Answer	No
Document Name	

Comment

1. The phrases “unacceptable generation and load loss” in R3 Part 3.1 and “actual or more conservative clearing times” in R3 Part 3.3.5 are inherently subjective and open to regional interpretation. To promote uniform implementation, PG&E recommends that the NERC DT establish quantitative default benchmarks for generation and load loss thresholds, together with a clearing-time margin. Including such reference values—while still allowing entities to justify alternative criteria based on system characteristics—will align CIP-014-4 with the measurable approach used in the TPL standards and reduce the potential for inconsistent compliance findings across regions.

2. R3 Part 3.3.1.1 directs that simulations at the applicable station assume prior loss of communication and Protection Systems but does not specify the scope of that loss—whether all communication channels and all Protection System functions at the station are presumed lost, or whether the entity may model a subset based on the attack scenario justified under R3 Part 3.3.3. Defining the expected modelling approach, preferably with an example one-line diagram and timing table in the Technical Rationale, will allow entities to apply the requirement consistently and give verifiers and auditors a clear baseline for compliance testing.

3. Two clearing-time provisions in R3 Part 3.3 appear to direct different outcomes. R3 Part 3.3.1.3 requires delayed (remote) clearing at the applicable station unless otherwise technically substantiated, while R3 Part 3.3.5 requires actual or more conservative clearing times to be used. The relationship between the two is unclear and will likely produce inconsistent practice across entities. PG&E recommends that the NERC DT consolidate these provisions into a single clearing-time requirement that establishes a clear hierarchy among delayed/remote clearing, actual clearing times, and any shorter alternative supported by technical substantiation. A unified provision will support consistent simulation practice and reduce the potential for differing interpretations across regions.

4. The term “credible high-severity physical attack” in R3 Part 3.3.3 is central to the Fault-justification record but is not defined in CIP-014-4 or in the NERC Glossary. Without a shared reference, entities are likely to identify different attack scenarios and verifiers to apply different standards during their review. PG&E recommends that the NERC DT reference an established threat framework or at a minimum identify in the Technical Rationale the broad categories of attack the drafting team has in mind. Providing this anchor will support consistent Fault selection across entities and reduce interpretive disputes.

Likes 0	
Dislikes 0	

Response

Jeffrey Streifling - NB Power Corporation - 1

Answer	No

Document Name	
Comment	
Please see previous comment that was submitted by NPCC RSC. NPCC RSC believes that only the Transmission Planner (TP) is able to answer R3 and not the TO.	
Likes 0	
Dislikes 0	
Response	
Tamarra Hardie - Public Utility District No. 1 of Chelan County - 6, Group Name CHPD	
Answer	No
Document Name	
Comment	
There on concerns with the modification of R3.3 in this draft revision. The description is problematic as it first assumes a high-severity physical attack is credible, then is unclear what ‘high severity' refers to, whether the severity of the attack refers to the damage to station equipment, or to the scale of grid-impact. CHPD recommends clarification or re-writing to clarify what is meant by ‘high severity’. Additionally, the requirement language is unclear if the same type of fault must be applied to the other stations within 1500’ even if that would result in a scenario that is not credible or likely. Technical rationale for R3.1 states that the damage to nearby stations is “assumed to be collateral damage” but this is an assumption that does not have a technical justified basis as it relies upon The Bomb Threat Stand-off Card (from CIP-014 Technical Rationale for R2) which describes evacuation distances for threat types, not technically justified studies or research of expected damage thresholds for various threats. The standard also does not mention common definitions of threat types or guidance of which threats to assess. If all threat types are available to be studied but there are no common event definitions, then the standard will rely upon events definitions in entities documented methodologies, which may vary widely in scope and interpretation. R3.3.2 technical rationale refers to allowing other fault types but still relies upon entities’ methodologies to describe the specific applicable threat(s), which could lead to inconsistencies in threat descriptions and/or significant increases to workload burden for the utility, 3rd party reviewers, and auditors. R3.3.4 requires “Removal of all Elements that Protection Systems and other controls are expected to automatically disconnect” but as written there is not a CIP-014 requirement to coordinate with neighbors, so how would a given entity know which protection systems and controls are expected to automatically disconnect at neighboring facilities without coordination? Also, the current language does not account for the possibility that the nearby station may not be electrically connected to the station under study in any meaningful capacity. R3.3.5 mentions ‘actual’ clearing times. Actual times would denote from an actual attack - in simulation, the best most utilities can study are expected times, unless of course that entity had an actual attack (a rare situation). CHPD recommends changing the term 'actual' to 'expected'. Lastly, as noted in the comments for R2 above, the use of the term 'proximate' is unusual and infrequently used in common language. CHPD would recommend changing this term to 'near' or 'nearby'.	
Likes 0	
Dislikes 0	
Response	

Jennifer Wright - Sempra - San Diego Gas and Electric - 5	
Answer	No
Document Name	
Comment	
SDG&E objects to the inclusion of thresholds in R3.1 “the criteria shall include, at a minimum, technically justified thresholds identifying unacceptable generation and load loss within an interconnection. We suggest striking it out altogether & allow TOs to document how they assess instability as they see fit for their own systems.	
Likes 0	
Dislikes 0	
Response	
Randy Peters - Manitoba Hydro - 1,3,5,6 - MRO	
Answer	No
Document Name	
Comment	
MH believes the requirement to develop a documented justification for the physical attack to be simulated in accordance with new sub-requirement R3.3.3 is not technically justifiable and is not cost-effective. MH recommends removing sub-requirement R3.3.3 from the revised standard.	
Likes 0	
Dislikes 0	
Response	
Oshara Narangoda - Oshara Narangoda On Behalf of: Aditya Menon, Hydro One Networks, Inc., 1; - Oshara Narangoda	
Answer	No
Document Name	
Comment	
Hydro One is concerned that Requirement R2 and R3 assigns implicit accountability to Transmission Owners (TOs) for conducting or substantiating simulations involving proximate BES facilities owned and operated by other entities, over which the TO has no authority, operational control, or guaranteed data access. **Example:**	

Where a Generator Owner (GO) BES station is adjacent to a CIP-014 identified Transmission station, the Transmission Owner cannot compel participation in modeling or analysis from the GO. As written, Requirement R3 does not clearly define:

- Who is responsible for performing such simulations
- Which entity is accountable for audit evidence
- How compliance is achieved when the adjacent facility is outside the TO's control

These challenges are further exacerbated in cross-jurisdictional scenarios (e.g., Manitoba, New York, Michigan), where regulatory authority, planning roles, and data-sharing constraints differ.

Hydro One believes interconnection-level modeling of cascading, instability, and uncontrolled separation is more appropriately the responsibility of the **Reliability Coordinator (RC) and/or the Planning Coordinator (PC) / Transmission Planner (TP)** or should require an explicit transfer of responsibility from the Transmission Owner to these entities.

Absent clarification, Requirement R3 exposes TOs to compliance risk for activities they cannot directly perform or control.

General

Like other NERC standards, the use of **"past qualified studies"** should be allowed. Recommend writing this into the standard.

R3.2

The dynamic simulation test is performed first. Only stations or substations that meet the criteria in the dynamic simulation are then evaluated using the steady state simulation to determine CIP-014 applicability.

Propose the rewrite as follows:

"The dynamic simulation test is done first. For those stations or substations which pass criteria in the dynamic simulation test, the steady-state simulation test is to be used to determine CIP-14 applicability status."

R3.3.3

Requirement R3.3.3 calls for a documented justification of the credible high-severity physical attack and associated fault(s) to be simulated. Can you clarify the expected level of detail for this documentation, particularly with respect to what would be considered sufficient to meet auditor expectations for the R3 VSLs? Additionally, is the intent of R3.3.3 limited strictly to the selection of fault conditions, or are recovery considerations (e.g., restoration assumptions, reconfiguration capability, or time to recovery) expected to be included as part of the justification?"

Likes 0	
Dislikes 0	

Response

Timothy Singh - Timothy Singh On Behalf of: Israel Perez, Salt River Project, 6, 3, 5, 1; Jennifer Bennett, Salt River Project, 6, 3, 5, 1; Laura Somak, Salt River Project, 6, 3, 5, 1; Matthew Jaramilla, Salt River Project, 6, 3, 5, 1; - Timothy Singh

Answer	No
Document Name	

Comment

SRP would like further clarification and specific guidance for R3. There is no mention of the type of threat or severity considered. Also no mention of whether both stations are disabled by a single event (bomb) or by multiple events in the same proximate area (shooter(s) or similar). This could lead to

different utilities running completely different analyses on the proximate sites. Clarification is also needed to determine which entity is responsible for implementing R3. Although there are situations in which different utilities share or are proximate to each other, there may be an issue with the responsibility for sites brought in within the new 1500 ft perimeter. There is also clarification needed on whether a 3-phase bolted fault or a single-line-to-ground fault is required for the analysis.

Likes 0	
Dislikes 0	

Response

Nathan Browder - Nathan Browder On Behalf of: Matt Lewis, Lower Colorado River Authority, 1, 5; - Nathan Browder

Answer	No
Document Name	

Comment

No. We do not agree with the proposed modifications specifically in section 3.3.3. The added language could lead to inconsistent interpretation of what constitutes a “credible” physical attack scenario and the amount of justification needed for a fault. LCRA believes that how a substation is taken out of service matters less than the result of a substation outage. Irrespective of the cause of the outage, the result is the substation is out of service. The proposed language appears to require entities to first develop physical attack scenarios before performing the study, which feels like doing a threat assessment twice.

Likes 0	
Dislikes 0	

Response

Nick Leathers - Nick Leathers On Behalf of: David Jendras Sr, Ameren - Ameren Services, 3, 6, 1; - Nick Leathers

Answer	No
Document Name	

Comment

Ameren would like more clarity around R3.3.1.2 and R3.3.2.1 regarding where and when the faults should be applied. (i.e. should all faults be applied at the same time to all buses at the transmission substation or station and proximate station or substation?)

Likes 0	
Dislikes 0	

Response

Gail Elliott - Gail Elliott On Behalf of: Michael Moltane, International Transmission Company Holdings Corporation, 1; - Gail Elliott

Answer	No

Document Name	

Comment

For 3.1 ITC requests removal of requirement for technically justified thresholds and instead require only documented criteria for unacceptable generation and load loss within an interconnection.

ITC recommends removal of 3.3.1.1 and 3.3.1.2 as a prior loss of communication and protection systems and then an application of a fault or faults isn't a realistic sequence. ITC believes 3.3.1.3 by itself sufficiently describes the intended scenario of using delayed (remote) clearing times unless otherwise technically substantiated.

Likes 0	
Dislikes 0	

Response

Jennifer Neville - Western Area Power Administration - 6

Answer	No
Document Name	

Comment

WAPA objects to the addition of "technically justified" to R3.1. WAPA suggests removing "technically justified". If that is not acceptable, WAPA requests that the requirement be a documented rationale instead. The term "technically justified" is concerning. Who determines whether a threshold is "technically justified" for unacceptable generation and load loss within an entire Interconnection? The following suggested change is provided if simply striking "technically justified" isn't acceptable:

R3.1 Documented criteria for assessing instability, uncontrolled separation, or Cascading within an Interconnection. The criteria shall include, at a minimum, thresholds identifying unacceptable generation and load loss within an Interconnection. The rationale for these thresholds shall be available as supporting information.

This aligns with a similar statement made in TPL-001-5.1 regarding supporting rationale.

Likes 0	
Dislikes 0	

Response

Joseph Scott - Lower Colorado River Authority - 5

Answer	No
Document Name	

Comment

We do not agree with the proposed modifications specifically in section 3.3.3. The added language could lead to inconsistent interpretation of what constitutes a "credible" physical attack scenario and the amount of justification needed for a fault. LCRA believes that how a substation is taken out of

service matters less than the result of a substation outage. Irrespective of the cause of the outage, the result is the substation is out of service. The proposed language appears to require entities to first develop physical attack scenarios before performing the study, which feels like doing a threat assessment twice.	
Likes 0	
Dislikes 0	
Response	
John Pearson - ISO New England, Inc. - 2	
Answer	No
Document Name	
Comment	
Sub-requirements 3.3.1 and 3.3.2 should be clarified to indicate whether testing will be at the same time or separately, i.e., are these two parts of the same simulation or two separate simulations? Sub-requirement 3.3.3 should be replaced with language that simply applies a 3-phase fault.	
Likes 0	
Dislikes 0	
Response	
Keihen Allen-Kitchen - Western Area Power Administration - 1	
Answer	No
Document Name	
Comment	
WAPA objects to the addition of “technically justified” to R3.1. WAPA suggests removing “technically justified”. If that is not acceptable, WAPA requests that the requirement be a documented rationale instead. The term “technically justified” is concerning. Who determines whether a threshold is “technically justified” for unacceptable generation and load loss within an entire Interconnection? The following suggested change is provided if simply striking “technically justified” isn’t acceptable: R3.1 Documented criteria for assessing instability, uncontrolled separation, or Cascading within an Interconnection. The criteria shall include, at a minimum, thresholds identifying unacceptable generation and load loss within an Interconnection. The rationale for these thresholds shall be available as supporting information. This aligns with a similar statement made in TPL-001-5.1 regarding supporting rationale.	
Likes 0	

Dislikes 0	
Response	
Misty Carneal - Duke Energy - 1,3,5,6 - SERC,RF	
Answer	Yes
Document Name	
Comment	
Duke Energy supports the modifications.	
Likes 0	
Dislikes 0	
Response	
Tremayne Brown - ReliabilityFirst - 10	
Answer	Yes
Document Name	
Comment	
The Technical Rational Document provides added context. However, the RF team believes in order to address existing issues and the intent of the Standard, more clarity is needed in R3. R3.1 of the Requirement does not call out Steady State or Dynamic studies, while the Technical Rational lists parameters that can be used to evaluate the steady-state and/or dynamic analysis. It is recommended that the thresholds be identified for both Steady State and Dynamic, not and/or. It is recommended that this language should be in the Requirement, not just the Technical Rationale. For R3.3 (3.3.2.1/3.3.3.2) it requires a TO to provide what simulations were run, whereas, the RF team believes a TO's methodology should also include technical justification for which Fault or Faults were run. It is recommended that this language should be in the Requirement, not just the Technical Rationale.	
Likes 0	
Dislikes 0	
Response	
Ronald Hoover - Bonneville Power Administration - 1,3,5,6 - WECC	
Answer	Yes
Document Name	
Comment	

BPA Transmission Planning supports new Requirement R3, noting its alignment with our current risk assessment methodology and its value in detailing minimum risk assessment requirements for all Transmission Owners. However, we find the generation or load loss criteria regarding specific MW thresholds unclear. NERC should consider adding a net loss criterion or establishing quantitative default benchmarks. Additionally, "Fault" should be specified as a 3-phase Fault, as it is typically the most severe.

Likes 0	
Dislikes 0	

Response

Kelly Heims - Central Iowa Power Cooperative - 1

Answer	Yes
Document Name	

Comment

Central Iowa Power Cooperative supports the MRO's NERC Standards Review Forum (NSRF) and ACES comments for Question 3.

Likes 0	
Dislikes 0	

Response

Amy Casuscelli - Xcel Energy, Inc. - 1,3,5,6 - MRO,WECC

Answer	Yes
Document Name	

Comment

Xcel Energy supports EEI comments

Likes 0	
Dislikes 0	

Response

Rachel Schuldt - Black Hills Corporation - 6, Group Name Black Hills Corporation - All Segments

Answer	Yes
Document Name	

Comment

Black Hills Corporation agrees with the modifications for Requirement R3.	
Likes 0	
Dislikes 0	
Response	
Daniel Valle - New York Power Authority - 1	
Answer	Yes
Document Name	
Comment	
NYPA supports the comments submitted by NPCC RSC.	
Likes 0	
Dislikes 0	
Response	
Joseph Gatten - Great River Energy - 3, Group Name Great River Energy	
Answer	Yes
Document Name	
Comment	
No additional comment.	
Likes 0	
Dislikes 0	
Response	
Matt Bullard - Dominion - Dominion Virginia Power - 3, Group Name Dominion Energy	
Answer	Yes
Document Name	
Comment	

DE agrees with the modifications, but DE has concerns protections or an exception may be needed where the TO is unable to get the required data from the proximate station or substation owner when performing the assessment in R5. Otherwise, results of the assessment in R5 would be speculative for the portion that addresses R3.3.2.

Likes 0	
Dislikes 0	

Response

Alan Kloster - Alan Kloster On Behalf of: Jeremy Harris, Evergy, 3, 5, 1, 6; Kevin Frick, Evergy, 3, 5, 1, 6; Marcus Moor, Evergy, 3, 5, 1, 6; Tiffany Lake, Evergy, 3, 5, 1, 6; - Alan Kloster

Answer	Yes
Document Name	

Comment

Evergy supports and incorporates by reference the comments of the Edison Electric Institute (EEI) for question #3.

Likes 0	
Dislikes 0	

Response

Andrea Koch - Edison Electric Institute - NA - Not Applicable - NA - Not Applicable

Answer	Yes
Document Name	

Comment

EEI agrees with the modification made to Requirement R3.

EEI proposes the following language modification to the final sentence of the Technical Rationale for Requirement R3, Part 3.3.1 that is more aligned with the language in Requirement R3 Subsection R3.3.1.3.

“The use of delayed clearing times, **unless otherwise technically substantiated typically Zone 2**, is necessary because the applicable substation has lost local protection and all communications with other substations.”

Likes 0	
Dislikes 0	

Response

Clay Walker - Clay Walker On Behalf of: Robert Hirchak, Cleco Corporation, 6, 5, 1, 3; - Clay Walker

Answer	Yes
Document Name	
Comment	
Cleco agrees with EEI comments.	
Likes 0	
Dislikes 0	
Response	
Hayk Zargaryan - Edison International - Southern California Edison Company - 1	
Answer	Yes
Document Name	
Comment	
See comments submitted by Edison Electric Institute.	
Likes 0	
Dislikes 0	
Response	
Todd Garwick - Edison International - Southern California Edison Company - 3	
Answer	Yes
Document Name	
Comment	
See comments submitted by Edison Electric Institute	
Likes 0	
Dislikes 0	
Response	
Jodi Yeary - AEP - 3	
Answer	Yes
Document Name	

Comment
AEP notices that requirement R3.3 may be unclear and open-ended, creating potential audit risk, specifically regarding the definitions of “credible” or “high severity,” which may be subject to inconsistent interpretations and deemed insufficient in an audit context. AEP will develop a justification document around our interpretation of these terms, but recognize that it may be subjective in nature AEP requests clarification around what constitutes “credible” and “high severity” scenarios in the Technical Rationale, while avoiding excessive scenario detail that could serve as a roadmap for malicious actors. AEP also requests clarification around the inclusion of the word *“prior”* from Part 3.3.1.1. The requirement should associate the loss of communications directly with the attack scenario being simulated, rather than requiring a prior loss associated with some undefined earlier scenario. Fault clearing times should be derived from the nature of the simulated scenario, associated fault, and the specific protection scheme applied to each Element at an applicable station. If the acceptable scenarios are to involve loss of communication, that should be explicitly stated. Loss of communication clearing times may be normal or delayed depending on the type of protection system applied to an Element.

Likes 0	
Dislikes 0	

Response

Lori Frisk - Lori Frisk On Behalf of: Hillary Creurer, Allete - Minnesota Power, Inc., 1; - Lori Frisk	
Answer	Yes
Document Name	

Comment
Minesota Power supports EEI’s comments

Likes 0	
Dislikes 0	

Response

Daniel Gacek - Exelon - 1, Group Name Exelon	
Answer	Yes
Document Name	

Comment
Exelon agrees with the modifications made to Requirement R3. Exelon also supports the EEI suggested edit to the Technical Rationale as stated below:

EEI proposes the following language modification to the final sentence of the Technical Rationale for Requirement R3, Part 3.3.1 that is more aligned with the language in Requirement R3 Subsection R3.3.1.3.

“The use of delayed clearing times, **unless otherwise technically substantiated,** is necessary because the applicable substation has lost local protection and all communications with other substations.”

Deleting the phrase "typically Zone 2" from the sentence above.

Likes 0	
Dislikes 0	

Response

Stephanie Kenny - Edison International - Southern California Edison Company - 6

Answer	Yes
Document Name	

Comment

See EEI Comments

Likes 0	
Dislikes 0	

Response

Dwanique Spiller - Berkshire Hathaway - NV Energy - 5

Answer	Yes
Document Name	

Comment

Likes 0	
Dislikes 0	

Response

Donna Wood - Tri-State G and T Association, Inc. - 1

Answer	Yes
Document Name	

Comment

Likes 0	
Dislikes 0	
Response	
Jessica Cordero - Unisource - Tucson Electric Power Co. - 1	
Answer	Yes
Document Name	
Comment	
Likes 0	
Dislikes 0	
Response	
Amy Wilke - American Transmission Company, LLC - 1	
Answer	Yes
Document Name	
Comment	
Likes 0	
Dislikes 0	
Response	
Kevin Conway - Western Power Pool - 4	
Answer	Yes
Document Name	
Comment	
Likes 0	
Dislikes 0	
Response	

Rebika Yitna - Rebika Yitna On Behalf of: Roger Brand, MEAG Power, 3, 1; - Rebika Yitna	
Answer	Yes
Document Name	
Comment	
Likes 0	
Dislikes 0	
Response	
Matthew Nicklin - Southern Illinois Power Cooperative - 1,5 - SERC	
Answer	Yes
Document Name	
Comment	
Likes 0	
Dislikes 0	
Response	
Alyssia Rhoads - Public Utility District No. 1 of Snohomish County - 1	
Answer	Yes
Document Name	
Comment	
Likes 0	
Dislikes 0	
Response	
Wendy Kalidass - U.S. Bureau of Reclamation - 5	
Answer	Yes
Document Name	
Comment	

Likes 0	
Dislikes 0	
Response	
Karen Artola - CPS Energy - 1,3,5 - Texas RE	
Answer	Yes
Document Name	
Comment	
Likes 0	
Dislikes 0	
Response	
Anna Martinson - MRO - 1,2,3,4,5,6 - MRO, Group Name MRO Group	
Answer	Yes
Document Name	
Comment	
Likes 0	
Dislikes 0	
Response	
Stephen Stafford - Stephen Stafford On Behalf of: Greg Davis, Georgia Transmission Corporation, 1; - Stephen Stafford	
Answer	Yes
Document Name	
Comment	
Likes 0	
Dislikes 0	
Response	
Sarah Miller - FirstEnergy - FirstEnergy Corporation - 4, Group Name FE Voters	

Answer	Yes
Document Name	
Comment	
Likes 0	
Dislikes 0	
Response	
Katrina Lyons - Georgia System Operations Corporation - 4	
Answer	Yes
Document Name	
Comment	
Likes 0	
Dislikes 0	
Response	
TRACEY JOHNSON - Southern Indiana Gas and Electric Co. - 3,5,6 - RF	
Answer	Yes
Document Name	
Comment	
Likes 0	
Dislikes 0	
Response	
Zahid Qayyum - New York Power Authority - 5	
Answer	Yes
Document Name	
Comment	
Likes 0	

Dislikes 0	
Response	
Isidoro Behar - Long Island Power Authority - 1	
Answer	Yes
Document Name	
Comment	
Likes 0	
Dislikes 0	
Response	
Thomas Brinckman - CenterPoint Energy Houston Electric, LLC - 1 - Texas RE	
Answer	Yes
Document Name	
Comment	
Likes 0	
Dislikes 0	
Response	
Said Sidiqi - Tennessee Valley Authority - 1,3,5,6 - SERC	
Answer	Yes
Document Name	
Comment	
Likes 0	
Dislikes 0	
Response	
Jodirah Green - ACES Power Marketing - 1,3,4,5,6 - MRO,WECC,Texas RE,SERC,RF, Group Name ACES Collaborators	
Answer	Yes

Document Name	
Comment	
Likes 0	
Dislikes 0	
Response	
Naresh Latchman - Georgia System Operations Corporation - 3	
Answer	Yes
Document Name	
Comment	
Likes 0	
Dislikes 0	
Response	
Laura Brignola - Constellation - 6	
Answer	
Document Name	
Comment	
Not Applicable to Constellation.	
Likes 0	
Dislikes 0	
Response	
Chantal Mazza - Chantal Mazza On Behalf of: Junji Yamaguchi, Hydro-Quebec (HQ), 1, 5; Nicolas Turcotte, Hydro-Quebec (HQ), 1, 5; - Chantal Mazza	
Answer	
Document Name	
Comment	

Hydro-Québec supports the following NPCC RSC comments: Please see previous comment that was submitted by NPCC RSC. NPCC RSC believes that only the Transmission Planner (TP) is able to answer R3 and not the TO.

Furthermore, in HQ's view, the technical efforts and resources required to develop the list of critical facilities in accordance with Requirement R3 are significant and are notcost-effectively justifiable when undertaken solely to satisfy the objectives of CIP-014.

As we have previously highlighted, system performance assessments that aim at determining critical elements of a system can only be conducted by an entity that possesses the knowledge of the behavior of the system as whole and can certainly not be performed by a TO alone. As such, the TP and/or PC are the best suited functional entities to determine the critical elements of the power system under their responsibility or jurisdiction. If, for any reason, an explicit transfer of responsibility from the TO to the TP and/or PC is not considered feasible, then the current resulting implicit transfer of burden from the TO to the TP and PC should, at a minimum, be formally acknowledged in writing in the standard. Hydro-Québec agrees that The TP and/or PC, should be required to provide a comprehensive methodology and uniform approach in determining the proper level of contingency applied to the system in their jurisdiction order to determine the CIP-014 applicable facilities list. However, the TP and/or PC **should be allowed to rely on technically qualifying past or related studies** for the purpose of establishing the resulting facilities identified for applicability. Hydro-Québec's vote in favor of this revision is dependent on this flexibility being explicitly stated as such in the standard.

Likes 0	
Dislikes 0	

Response

Joshua London - Eversource Energy - 1, Group Name Eversource

Answer	
Document Name	

Comment

The requirement to document criteria identifying unacceptable generation and load loss "within an Interconnection" is unclear and open to interpretation. It is not clear whether this refers to entities that operate across multiple Interconnections, or whether it requires entities to define thresholds based on impacts to an entire Interconnection. If the latter, this could be interpreted as requiring individual TOs to assess or define Interconnection wide impact criteria, which is beyond their visibility and responsibility. To avoid inconsistent interpretation the drafting team should clarify the intent. If the requirement is meant to address impacts that can be assessed by the entity, the phrase "within an Interconnection" should be completely removed or revised to define the scope more precisely. If the intent is to assess Interconnection wide impacts, the DT should provide a maximum threshold of unacceptable generation and load loss so all TOs are aligned in implementation.

Likes 0	
Dislikes 0	

Response

Dan Perry - TXNM Energy - 1,3,5 - WECC,Texas RE

Answer	
Document Name	

Comment

TXNM Energy agrees with EEI submitted comments repeated below.

EEI agrees with the modification made to Requirement R3.

EEI proposes the following language modification to the final sentence of the Technical Rationale for Requirement R3, Part 3.3.1 that is more aligned with the language in Requirement R3 Subsection R3.3.1.3.

“The use of delayed clearing times, **unless otherwise technically substantiated typically Zone 2**, is necessary because the applicable substation has lost local protection and all communications with other substations.”

Likes 0	
Dislikes 0	

Response

Kirsten Rowley - Midcontinent ISO, Inc. - 2, Group Name ISO/RTO Council (IRC) Standards Review Committee (SRC)

Answer	
Document Name	

Comment

Similar to the comment provided in response to Question 2, third-party verifications performed under Requirement R6 may not be sufficient to verify the communications proposed under Requirement R3 (specifically R3.3.1.1 regarding prior loss of communication and Protection Systems). Because unaffiliated third parties conducting R6 verifications must rely on the Transmission Owner to supply the necessary information, the intended checks and balances of the review are diminished. At best, information may be collected, but independently verifiable evidence may not be accessible. The IRC SRC recommends that the drafting team acknowledge this limitation in verifiability within the Technical Rationale.

Note: AESO, ISO-NE, and SPP abstain from these comments.

Likes 0	
Dislikes 0	

Response

Rachel Coyne - Texas Reliability Entity, Inc. - 10

Answer	
Document Name	

Comment

Texas RE recommends the following revisions (in bold):

- 3.1 "…The criteria shall include, at a minimum, technically justified thresholds identifying generation and load loss **that could cause instability, uncontrolled separation, or cascading** within the interconnection." This specifies that unacceptable generation and load loss is loss that could cause instability, uncontrolled separation, or cascading effects.
- 3.2 – revise "System peak Load case" to "System **on-Peak** Load case" to ensure consistency with the NERC-defined term.
- 3.3.3.1 "Prior loss of communication **or** Protection Systems, **or both**;" This captures the loss of one or both of these components.

Likes 0	
Dislikes 0	

Response

Ruida Shu - Northeast Power Coordinating Council - 10, Group Name NPCC RSC

Answer	
Document Name	

Comment

Please see previous comment that was submitted by NPCC RSC. NPCC RSC believes that only the Transmission Planner (TP) is able to answer R3 and not the TO.

Likes 0	
Dislikes 0	

Response

Khang Le - Seminole Electric Cooperative, Inc. - 1

Answer	
Document Name	

Comment

See comment in Question 8

Likes 0	
Dislikes 0	

Response

Lucinda Bradshaw - Lucinda Bradshaw On Behalf of: Byron Booker, Oncor Electric Delivery, 1; - Lucinda Bradshaw

Answer	
Document Name	

Comment

Oncor Electric Delivery Company LLC has no new comments on the most recent revisions shown in 2023-06-cip-014-4-redline-to-last-posted-03312026.docx. Instead, Oncor incorporates by reference here its previous comments submitted herein on November 5, 2024 and July 21, 2025.	
Likes 0	
Dislikes 0	
Response	
Kennedy Meier - Electric Reliability Council of Texas, Inc. - 2	
Answer	
Document Name	
Comment	
ERCOT joins the comments submitted by the IRC SRC and adopts them as its own.	
Likes 0	
Dislikes 0	
Response	

4. Do you agree with the modifications made in CIP-014-4 with new Requirement R4 to address the issues identified in the SAR? If you do not agree, please provide your recommendation and, if appropriate, technical or procedural justification.

Constantin Chitescu - Ontario Power Generation Inc. - 5

Answer	No
Document Name	

Comment

OPG supports the following NPCC Regional Standards Committee's comments:

"Based on the Technical Rationale, the addition of "BES Elements" points to the addition of "jointly owned" Transmission stations and Transmission substations in the Applicability section. However, the introduction of the term(s) "BES Elements" adds confusion by speaking to Elements instead of the applicable Transmission stations and Transmission substations."

Likes 0	
Dislikes 0	

Response

Ruida Shu - Northeast Power Coordinating Council - 10, Group Name NPCC RSC

Answer	No
Document Name	

Comment

Based on the Technical Rationale, the addition of "BES Elements" points to the addition of "jointly owned" Transmission stations and Transmission substations in the Applicability section. However, the introduction of the term(s) "BES Elements" adds confusion by speaking to Elements instead of the applicable Transmission stations and Transmission substations.

Likes 0	
Dislikes 0	

Response

Gail Elliott - Gail Elliott On Behalf of: Michael Moltane, International Transmission Company Holdings Corporation, 1; - Gail Elliott

Answer	No
Document Name	

Comment

ITC suggests the removal of or the following revision to Requirement R4:

R4. Each Transmission Owner with applicable Transmission station(s) and Transmission substation(s) identified in Requirement R1 containing Bulk Electric System (BES) Elements greater than 200 kV or identified as part of an IROL or essential to meeting an NPIR owned by multiple Transmission Owners shall coordinate with each appropriate Transmission Owner(s) to determine and document their individual and joint responsibilities for documenting a risk assessment methodology under Requirement R3 and for performing any required risk assessments per Requirement R5.

R4 is administrative requiring documentation for all joint stations. Many joint stations have existed for decades where the two entities have an understanding of who is responsible for what parts of compliance. When documentation is being required, many entities legal groups will feel a need to be involved making this both time consuming and costly.

Likes 0	
Dislikes 0	

Response

Timothy Singh - Timothy Singh On Behalf of: Israel Perez, Salt River Project, 6, 3, 5, 1; Jennifer Bennett, Salt River Project, 6, 3, 5, 1; Laura Somak, Salt River Project, 6, 3, 5, 1; Matthew Jaramilla, Salt River Project, 6, 3, 5, 1; - Timothy Singh

Answer	No
Document Name	

Comment

SRP disagrees with R4 and that Transmission Owners should be held accountable for submitting their respective documentation for their substations. The coordination effort may be difficult depending on the methodologies and scenarios, and it could affect the outcomes. R4 could also create a compliance risk, as utilities may be held responsible for the inaction or unresponsiveness of other utilities.

Likes 0	
Dislikes 0	

Response

Chantal Mazza - Chantal Mazza On Behalf of: Junji Yamaguchi, Hydro-Quebec (HQ), 1, 5; Nicolas Turcotte, Hydro-Quebec (HQ), 1, 5; - Chantal Mazza

Answer	No
Document Name	

Comment

Based on the Technical Rationale, the addition of “BES Elements” points to the addition of “jointly owned” Transmission stations and Transmission substations in the Applicability section. However, the introduction of the term(s) “BES Elements” adds confusion by speaking to Elements instead of the applicable Transmission stations and Transmission substations.

Likes 0	
Dislikes 0	

Response

Daniel Valle - New York Power Authority - 1	
Answer	No
Document Name	
Comment	
NYPA supports the comments submitted by NPCC RSC. In addition, NYPA recommends adding the term “existing” to the R4 requirement language on the jointly owned substation. This clarification would limit the scope to “existing” jointly owned facility. Including future jointly owned substations could introduce practical challenges and lead to ambiguity in implementation.	
Likes 0	
Dislikes 0	
Response	
Zahid Qayyum - New York Power Authority - 5	
Answer	No
Document Name	
Comment	
NYPA recommends adding the term “existing” to the R4 requirement language on the jointly owned substation. This clarification would limit the scope to “existing” jointly owned facility. Including future jointly owned substations could introduce practical challenges and lead to ambiguity in implementation.	
Likes 0	
Dislikes 0	
Response	
Amy Casuscelli - Xcel Energy, Inc. - 1,3,5,6 - MRO,WECC	
Answer	No
Document Name	
Comment	
To clarify responsibilities related to jointy owned facilities, we recommend the modification below: Suggested Modification in bold text: **R4.** *Each Transmission Owner with applicable Transmission station(s) and Transmission substation(s) identified in Requirement R1 jointly owned by multiple Transmission Owners shall coordinate with each appropriate Transmission Owner(s) to determine and document their individual and joint responsibilities under* ***Requirement R2****, Requirement R3, and Requirement R5.*	

It doesn't serve any purpose for the joint owner not responsible for performing the analysis to also have to identify proximate subs to the joint facility. It should be part of the individual and joint responsibilities agreement under R4 as to who will do the proximate locating for the joint facility.

Likes 0	
Dislikes 0	

Response

Tamarra Hardie - Public Utility District No. 1 of Chelan County - 6, Group Name CHPD

Answer	No
Document Name	

Comment

The current R4 language brings adjacent-stations considerations into the requirement without establishing any corresponding obligation for neighboring entities to participate. This creates uncertainty around how coordination is expected to occur and places entities in a position where their compliance may depend on the cooperation or responsiveness of others.

Likes 0	
Dislikes 0	

Response

Jeffrey Streifling - NB Power Corporation - 1

Answer	No
Document Name	

Comment

Based on the Technical Rationale, the addition of "BES Elements" points to the addition of "jointly owned" Transmission stations and Transmission substations in the Applicability section. However, the introduction of the term(s) "BES Elements" adds confusion by speaking to Elements instead of the applicable Transmission stations and Transmission substations.

Likes 0	
Dislikes 0	

Response

Ronald Hoover - Bonneville Power Administration - 1,3,5,6 - WECC

Answer	No
Document Name	

Comment

BPA Transmission Planning supports the new Requirement R4, recognizing its value in promoting collaborative assessments of joint substations using a shared methodology. However, the current wording poses considerable coordination challenges and presumes a degree of inter-entity collaboration, scheduling, and methodological consistency that may be impractical. Furthermore, it creates a compliance risk for individual entities, making them reliant on the actions and responsiveness of others.

Likes 0	
Dislikes 0	

Response

Stephanie Kenny - Edison International - Southern California Edison Company - 6

Answer	Yes
Document Name	

Comment

See EEI Comments

Likes 0	
Dislikes 0	

Response

Daniel Gacek - Exelon - 1, Group Name Exelon

Answer	Yes
Document Name	

Comment

Exelon agrees with the modifications to Requirement R4.

Likes 0	
Dislikes 0	

Response

Naresh Latchman - Georgia System Operations Corporation - 3

Answer	Yes
Document Name	

Comment

The requirement is appropriate in the context that the referenced risk assessment is from a physical security perspective and not a transmission planning analysis perspective. Should the intent of this comment be applicable to physical security and not a transmission planning analysis, then our answer would be yes.	
Likes 0	
Dislikes 0	
Response	
Todd Garwick - Edison International - Southern California Edison Company - 3	
Answer	Yes
Document Name	
Comment	
See comments submitted by Edison Electric Institute	
Likes 0	
Dislikes 0	
Response	
Hayk Zargaryan - Edison International - Southern California Edison Company - 1	
Answer	Yes
Document Name	
Comment	
See comments submitted by Edison Electric Institute.	
Likes 0	
Dislikes 0	
Response	
Rachel Coyne - Texas Reliability Entity, Inc. - 10	
Answer	Yes
Document Name	
Comment	

Texas RE noticed that control center is not capitalized throughout the standard. Texas RE recommends capitalizing the term since it is defined in the NERC Glossary.

Likes 0	
Dislikes 0	

Response

Jodirah Green - ACES Power Marketing - 1,3,4,5,6 - MRO,WECC,Texas RE,SERC,RF, Group Name ACES Collaborators

Answer	Yes
Document Name	

Comment

We agree with the way the new requirement reads, but feel R4 and R5 could be renumbered so the standard would be linear.

Likes 0	
Dislikes 0	

Response

Clay Walker - Clay Walker On Behalf of: Robert Hirchak, Cleco Corporation, 6, 5, 1, 3; - Clay Walker

Answer	Yes
Document Name	

Comment

Cleco agrees with EEI comments.

Likes 0	
Dislikes 0	

Response

Kirsten Rowley - Midcontinent ISO, Inc. - 2, Group Name ISO/RTO Council (IRC) Standards Review Committee (SRC)

Answer	Yes
Document Name	

Comment

No comment.

Likes 0	
Dislikes 0	
Response	
Andrea Koch - Edison Electric Institute - NA - Not Applicable - NA - Not Applicable	
Answer	Yes
Document Name	
Comment	
EEI agrees with the modifications for Requirement R4.	
Likes 0	
Dislikes 0	
Response	
Dan Perry - TXNM Energy - 1,3,5 - WECC,Texas RE	
Answer	Yes
Document Name	
Comment	
Likes 0	
Dislikes 0	
Response	
Alan Kloster - Alan Kloster On Behalf of: Jeremy Harris, Evergy, 3, 5, 1, 6; Kevin Frick, Evergy, 3, 5, 1, 6; Marcus Moor, Evergy, 3, 5, 1, 6; Tiffany Lake, Evergy, 3, 5, 1, 6; - Alan Kloster	
Answer	Yes
Document Name	
Comment	
Evergy supports and incorporates by reference the comments of the MRO NSRF for question #4.	
Likes 0	

Dislikes 0	
Response	
Joseph Gatten - Great River Energy - 3, Group Name Great River Energy	
Answer	Yes
Document Name	
Comment	
No additional comment.	
Likes 0	
Dislikes 0	
Response	
Isidoro Behar - Long Island Power Authority - 1	
Answer	Yes
Document Name	
Comment	
Req #4 specifically addresses facilities (BES Elements) with joint ownership to coordinate/collaborate. One improvement would be to include Transmission Owners whose stations have been identified as part of Req #2 to also be included in this requirement to coordinate. The ownership of the applicable and proximate stations may be different, and thus we feel the concept of coordination with respect to Req #2 should apply.	
Likes 0	
Dislikes 0	
Response	
Rachel Schuldt - Black Hills Corporation - 6, Group Name Black Hills Corporation - All Segments	
Answer	Yes
Document Name	
Comment	
Black Hills Corporation agrees with the modifications for Requirement R4.	
Likes 0	
Dislikes 0	

Response	
Katrina Lyons - Georgia System Operations Corporation - 4	
Answer	Yes
Document Name	
Comment	
The requirement is appropriate in the context that the referenced risk assessment is from a physical security perspective and not a transmission planning analysis perspective. Should the intent of this comment be applicable to physical security and not a transmission planning analysis, then our answer would be yes	
Likes 0	
Dislikes 0	
Response	
Kelly Heims - Central Iowa Power Cooperative - 1	
Answer	Yes
Document Name	
Comment	
Central Iowa Power Cooperative supports the MRO's NERC Standards Review Forum (NSRF) and ACES comments for Question 4.	
Likes 0	
Dislikes 0	
Response	
Anna Martinson - MRO - 1,2,3,4,5,6 - MRO, Group Name MRO Group	
Answer	Yes
Document Name	
Comment	
The MRO NSRF requests that the drafting team consider adding guidance to the measures or technical rational on how to show compliance if no joint owners are identified.	
Likes 0	

Dislikes 0	
Response	
Matthew Nicklin - Southern Illinois Power Cooperative - 1,5 - SERC	
Answer	Yes
Document Name	
Comment	
We agree with the way the new requirement reads, but feel R4 and R5 could be renumbered so the standard would be linear.	
Likes 0	
Dislikes 0	
Response	
Misty Carneal - Duke Energy - 1,3,5,6 - SERC,RF	
Answer	Yes
Document Name	
Comment	
Duke Energy supports the modifications.	
Likes 0	
Dislikes 0	
Response	
Kennedy Meier - Electric Reliability Council of Texas, Inc. - 2	
Answer	Yes
Document Name	
Comment	
Likes 0	
Dislikes 0	
Response	

John Pearson - ISO New England, Inc. - 2	
Answer	Yes
Document Name	
Comment	
Likes 0	
Dislikes 0	
Response	
Lori Frisk - Lori Frisk On Behalf of: Hillary Creurer, Allete - Minnesota Power, Inc., 1; - Lori Frisk	
Answer	Yes
Document Name	
Comment	
Likes 0	
Dislikes 0	
Response	
Jodi Yeary - AEP - 3	
Answer	Yes
Document Name	
Comment	
Likes 0	
Dislikes 0	
Response	
Joseph Scott - Lower Colorado River Authority - 5	
Answer	Yes
Document Name	
Comment	

Likes 0	
Dislikes 0	
Response	
Jennifer Neville - Western Area Power Administration - 6	
Answer	Yes
Document Name	
Comment	
Likes 0	
Dislikes 0	
Response	
Nick Leathers - Nick Leathers On Behalf of: David Jendras Sr, Ameren - Ameren Services, 3, 6, 1; - Nick Leathers	
Answer	Yes
Document Name	
Comment	
Likes 0	
Dislikes 0	
Response	
Carver Powers - Utility Services, Inc. - 4	
Answer	Yes
Document Name	
Comment	
Likes 0	
Dislikes 0	
Response	
Nathan Browder - Nathan Browder On Behalf of: Matt Lewis, Lower Colorado River Authority, 1, 5; - Nathan Browder	

Answer	Yes
Document Name	
Comment	
Likes 0	
Dislikes 0	
Response	
Said Sidiqi - Tennessee Valley Authority - 1,3,5,6 - SERC	
Answer	Yes
Document Name	
Comment	
Likes 0	
Dislikes 0	
Response	
Oshara Narangoda - Oshara Narangoda On Behalf of: Aditya Menon, Hydro One Networks, Inc., 1; - Oshara Narangoda	
Answer	Yes
Document Name	
Comment	
Likes 0	
Dislikes 0	
Response	
Matt Bullard - Dominion - Dominion Virginia Power - 3, Group Name Dominion Energy	
Answer	Yes
Document Name	
Comment	
Likes 0	

Dislikes 0	
Response	
Thomas Brinckman - CenterPoint Energy Houston Electric, LLC - 1 - Texas RE	
Answer	Yes
Document Name	
Comment	
Likes 0	
Dislikes 0	
Response	
Randy Peters - Manitoba Hydro - 1,3,5,6 - MRO	
Answer	Yes
Document Name	
Comment	
Likes 0	
Dislikes 0	
Response	
Joshua London - Eversource Energy - 1, Group Name Eversource	
Answer	Yes
Document Name	
Comment	
Likes 0	
Dislikes 0	
Response	
TRACEY JOHNSON - Southern Indiana Gas and Electric Co. - 3,5,6 - RF	
Answer	Yes

Document Name	
Comment	
Likes 0	
Dislikes 0	
Response	
Jennifer Wright - Sempra - San Diego Gas and Electric - 5	
Answer	Yes
Document Name	
Comment	
Likes 0	
Dislikes 0	
Response	
Sarah Miller - FirstEnergy - FirstEnergy Corporation - 4, Group Name FE Voters	
Answer	Yes
Document Name	
Comment	
Likes 0	
Dislikes 0	
Response	
Bob Cardle - Bob Cardle On Behalf of: Marco Rios, Pacific Gas and Electric Company, 3, 1, 5; Sandra Ellis, Pacific Gas and Electric Company, 3, 1, 5; Tyler Brun, Pacific Gas and Electric Company, 3, 1, 5; - Bob Cardle	
Answer	Yes
Document Name	
Comment	
Likes 0	

Dislikes 0	
Response	
Tasha Ward - Midwest Reliability Organization - 10	
Answer	Yes
Document Name	
Comment	
Likes 0	
Dislikes 0	
Response	
Stephen Stafford - Stephen Stafford On Behalf of: Greg Davis, Georgia Transmission Corporation, 1; - Stephen Stafford	
Answer	Yes
Document Name	
Comment	
Likes 0	
Dislikes 0	
Response	
Karen Artola - CPS Energy - 1,3,5 - Texas RE	
Answer	Yes
Document Name	
Comment	
Likes 0	
Dislikes 0	
Response	
Alison Nickells - NiSource - Northern Indiana Public Service Co. - 1	
Answer	Yes

Document Name	
Comment	
Likes 0	
Dislikes 0	
Response	
Wendy Kalidass - U.S. Bureau of Reclamation - 5	
Answer	Yes
Document Name	
Comment	
Likes 0	
Dislikes 0	
Response	
Alyssia Rhoads - Public Utility District No. 1 of Snohomish County - 1	
Answer	Yes
Document Name	
Comment	
Likes 0	
Dislikes 0	
Response	
Rebika Yitna - Rebika Yitna On Behalf of: Roger Brand, MEAG Power, 3, 1; - Rebika Yitna	
Answer	Yes
Document Name	
Comment	
Likes 0	
Dislikes 0	

Response	
Tremayne Brown - ReliabilityFirst - 10	
Answer	Yes
Document Name	
Comment	
Likes 0	
Dislikes 0	
Response	
Kevin Conway - Western Power Pool - 4	
Answer	Yes
Document Name	
Comment	
Likes 0	
Dislikes 0	
Response	
Amy Wilke - American Transmission Company, LLC - 1	
Answer	Yes
Document Name	
Comment	
Likes 0	
Dislikes 0	
Response	
Jessica Cordero - Unisource - Tucson Electric Power Co. - 1	
Answer	Yes
Document Name	

Comment	
Likes 0	
Dislikes 0	
Response	
Donna Wood - Tri-State G and T Association, Inc. - 1	
Answer	Yes
Document Name	
Comment	
Likes 0	
Dislikes 0	
Response	
Dwanique Spiller - Berkshire Hathaway - NV Energy - 5	
Answer	Yes
Document Name	
Comment	
Likes 0	
Dislikes 0	
Response	
Lucinda Bradshaw - Lucinda Bradshaw On Behalf of: Byron Booker, Oncor Electric Delivery, 1; - Lucinda Bradshaw	
Answer	
Document Name	
Comment	
Oncor Electric Delivery Company LLC has no new comments on the most recent revisions shown in 2023-06-cip-014-4-redline-to-last-posted-03312026.docx. Instead, Oncor incorporates by reference here its previous comments submitted herein on November 5, 2024 and July 21, 2025.	
Likes 0	

Dislikes 0	
Response	
Khang Le - Seminole Electric Cooperative, Inc. - 1	
Answer	
Document Name	
Comment	
See comment in Question 8	
Likes 0	
Dislikes 0	
Response	
Laura Brignola - Constellation - 6	
Answer	
Document Name	
Comment	
Not Applicable to Constellation.	
Likes 0	
Dislikes 0	
Response	

5. Do you agree with the modifications made in CIP-014-4 with adding Requirement R5 to address the issues identified in the SAR? If you do not agree, please provide your recommendation and, if appropriate, technical or procedural justification.

Alyssia Rhoads - Public Utility District No. 1 of Snohomish County - 1

Answer	No
Document Name	

Comment

SNPD strongly disagrees with adopting a 36-month risk assessment interval for utilities that have not previously identified any Transmission stations or substations as critical. This change would increase study costs without providing a meaningful improvement to the reliability of the Bulk Electric System (BES).

Instead, SNPD recommends retaining the existing 60-month assessment interval for Transmission Owners (TOs) that have not identified any applicable critical facilities. This approach should continue to include Transmission stations and substations that are planned to be placed in service within the next 60 calendar months.

For these utilities, reducing the assessment interval from 60 months to 36 months would result in unnecessary cost increases due to more frequent studies. Given their historical results, these additional assessments are unlikely to identify any new facilities that would qualify as CIP-014 critical beyond those already identified under CIP-014-3. As such, the proposed change offers little to no reliability benefit to the BES.

Likes 0	
Dislikes 0	

Response

Jeffrey Streifling - NB Power Corporation - 1

Answer	No
Document Name	

Comment

R5. Clarify if at the end of the 36-month period the entity must have the Risk Assessment started or completed? TFIST suggest splitting the operational assessment and security assessment into distinct assessments in the timeline to reduce confusion and not just referred to as the “risk assessment”.

In the last sentence of R5, “they should also be included in the risk assessment” TFIST questions if this makes the proximate Transmission station(s) and Transmission substation(s) optional in the risk assessment?

Likes 0	
Dislikes 0	

Response

Zahid Qayyum - New York Power Authority - 5

Answer	No
Document Name	
Comment	

NYPA believes it would be better to clarify the 36-calendar month requirement in R5 applies at the initiation or at the completion of the risk assessment. As currently written, the requirement could be interpreted either way, which may lead to inconsistent implementation and would help clarify confusion especially during the transition to the new standard.

NYPA believes the SDT may consider separating the operational assessment and security assessment into distinct assessments within the timeline, rather than collectively referring them as “risk assessment” to further improve clarity and reduce ambiguity”

Likes 0	
Dislikes 0	
Response	

Daniel Valle - New York Power Authority - 1

Answer	No
Document Name	
Comment	

NYPA supports the comments submitted by NPCC RSC. In addition, NYPA believes it would be better to clarify the 36-calendar month requirement in R5 applies at the initiation or at the completion of the risk assessment. As currently written, the requirement could be interpreted either way, which may lead to inconsistent implementation and would help clarify confusion especially during the transition to the new standard.

NYPA believes the SDT may consider separating the operational assessment and security assessment into distinct assessments within the timeline, rather than collectively referring them as “risk assessment” to further improve clarity and reduce ambiguity”

Likes 0	
Dislikes 0	
Response	

Isidoro Behar - Long Island Power Authority - 1

Answer	No
Document Name	
Comment	

Please clarify whether, at the end of the 36-month period, the entity is required to have initiated or completed the Risk Assessment. We recommend separating the operational assessment and security assessment into distinct components within the timeline to reduce confusion, rather than referring to both collectively as the “risk assessment.”

Likes 0	
Dislikes 0	
Response	
Chantal Mazza - Chantal Mazza On Behalf of: Junji Yamaguchi, Hydro-Quebec (HQ), 1, 5; Nicolas Turcotte, Hydro-Quebec (HQ), 1, 5; - Chantal Mazza	
Answer	No
Document Name	
Comment	
R5. Clarify if at the end of the 36-month period the entity must have the Risk Assessment started or completed? TFIST suggest splitting the operational assessment and security assessment into distinct assessments in the timeline to reduce confusion and not just referred to as the “risk assessment”. In the last sentence of R5, “they should also be included in the risk assessment” TFIST questions if this makes the proximate Transmission station(s) and Transmission substation(s) optional in the risk assessment?	
Likes 0	
Dislikes 0	
Response	
Timothy Singh - Timothy Singh On Behalf of: Israel Perez, Salt River Project, 6, 3, 5, 1; Jennifer Bennett, Salt River Project, 6, 3, 5, 1; Laura Somak, Salt River Project, 6, 3, 5, 1; Matthew Jaramilla, Salt River Project, 6, 3, 5, 1; - Timothy Singh	
Answer	No
Document Name	
Comment	
SRP sees the need for better oversight, or at least better clarification of the responsible entity. Clarity of accountability is needed, as the proximate substation TO may not know they need to be in compliance with the standard.	
Likes 0	
Dislikes 0	
Response	
Gail Elliott - Gail Elliott On Behalf of: Michael Moltane, International Transmission Company Holdings Corporation, 1; - Gail Elliott	
Answer	No
Document Name	
Comment	

For 5.1, failure to perform the entirety of the risk assessment could have an TO not completing either the stability or steady state portion of the study. If the third party reviewer identified a mistake in the piece of the study that was completed, they have nothing to verify for the second half of the study as it was not performed. Changes to the system which add resiliency to the system may have changed a previous critical station to a non-critical station. Not studying it going forward means that the costs would continue to be incurred for protecting a station that does not require it.

ITC recommends removing 5.2 as this is not language conducive to a standard requirement.

Likes 0	
Dislikes 0	

Response

Ruida Shu - Northeast Power Coordinating Council - 10, Group Name NPCC RSC

Answer	No
Document Name	

Comment

R5. Clarify if at the end of the 36-month period the entity must have the Risk Assessment started or completed? TFIST suggest splitting the operational assessment and security assessment into distinct assessments in the timeline to reduce confusion and not just referred to as the “risk assessment”.

In the last sentence of R5, “they should also be included in the risk assessment” TFIST questions if this makes the proximate Transmission station(s) and Transmission substation(s) optional in the risk assessment?

Likes 0	
Dislikes 0	

Response

Constantin Chitescu - Ontario Power Generation Inc. - 5

Answer	No
Document Name	

Comment

OPG supports the following NPCC Regional Standards Committee’s comments:

"R5. Clarify if at the end of the 36-month period the entity must have the Risk Assessment started or completed? TFIST suggest splitting the operational assessment and security assessment into distinct assessments in the timeline to reduce confusion and not just referred to as the “risk assessment”.
In the last sentence of R5, “they should also be included in the risk assessment” TFIST questions if this makes the proximate Transmission station(s) and Transmission substation(s) optional in the risk assessment?"

Likes 0	
Dislikes 0	

Response	
Misty Carneal - Duke Energy - 1,3,5,6 - SERC,RF	
Answer	Yes
Document Name	
Comment	
Duke Energy supports the modifications.	
Likes 0	
Dislikes 0	
Response	
Anna Martinson - MRO - 1,2,3,4,5,6 - MRO, Group Name MRO Group	
Answer	Yes
Document Name	
Comment	
The NSRF notes that the purpose statement in the standard was revised from "could **cause** instability" to "could **result in** instability." This change was reflected in R5, but parts R5.1, R5.2, and R5.3 still have the previous wording "as causing instability" instead of "resulting in instability." This change is recommended for consistency. The NSRF believes this to be a non-substantive change.	
Likes 0	
Dislikes 0	
Response	
Kelly Heims - Central Iowa Power Cooperative - 1	
Answer	Yes
Document Name	
Comment	
Central Iowa Power Cooperative supports the MRO's NERC Standards Review Forum (NSRF) and ACES comments for Question 5.	
Likes 0	
Dislikes 0	

Response

Stephen Stafford - Stephen Stafford On Behalf of: Greg Davis, Georgia Transmission Corporation, 1; - Stephen Stafford	
Answer	Yes
Document Name	
Comment	
There is no issue with performing a risk assessment every 36 months. However, Transmission Owners are not the appropriate registered entity to conduct planning analyses. Nor are the CIP standards the appropriate place to document planning analysis requirements. Planning studies should be governed within the TPL group of standards.	
Likes 0	
Dislikes 0	

Response

Tamarra Hardie - Public Utility District No. 1 of Chelan County - 6, Group Name CHPD	
Answer	Yes
Document Name	
Comment	
Recommend clarifying R5.3. As written, it is unclear whether the requirement applies only to the applicable entity's control center or also to a neighboring entity's control center that could contribute to instability, uncontrolled separation, or Cascading. If neighboring facilities must be identified, there is a risk they may not be notified, as no requirement currently exists to inform adjacent entities of their inclusion in a CIP-014 assessment. Clearer language would help ensure consistent expectations and appropriate coordination.	
Likes 0	
Dislikes 0	

Response

Katrina Lyons - Georgia System Operations Corporation - 4	
Answer	Yes
Document Name	
Comment	
There is no issue with performing a risk assessment every 36 months. However, Transmission Owners are not the appropriate registered entity to conduct planning analyses. Nor are the CIP standards the appropriate place to document planning analysis requirements. Planning studies should be governed within the TPL group of standards.	

Likes 0	
Dislikes 0	
Response	
Rachel Schuldt - Black Hills Corporation - 6, Group Name Black Hills Corporation - All Segments	
Answer	Yes
Document Name	
Comment	
Black Hills Corporation agrees with the modifications for Requirement R5.	
Likes 0	
Dislikes 0	
Response	
Joseph Gatten - Great River Energy - 3, Group Name Great River Energy	
Answer	Yes
Document Name	
Comment	
No additional comment.	
Likes 0	
Dislikes 0	
Response	
Matt Bullard - Dominion - Dominion Virginia Power - 3, Group Name Dominion Energy	
Answer	Yes
Document Name	
Comment	
DE agrees with the modifications but DE has concerns as identified in response to question 3.	
Likes 0	
Dislikes 0	

Response

Alan Kloster - Alan Kloster On Behalf of: Jeremy Harris, Evergy, 3, 5, 1, 6; Kevin Frick, Evergy, 3, 5, 1, 6; Marcus Moor, Evergy, 3, 5, 1, 6; Tiffany Lake, Evergy, 3, 5, 1, 6; - Alan Kloster

Answer	Yes
Document Name	

Comment
Evergy supports and incorporates by reference the comments of the MRO NSRF for question #5.

Likes 0	
Dislikes 0	

Response

Andrea Koch - Edison Electric Institute - NA - Not Applicable - NA - Not Applicable

Answer	Yes
Document Name	

Comment
EEI agrees with the modifications for Requirement R5.

Likes 0	
Dislikes 0	

Response

Kirsten Rowley - Midcontinent ISO, Inc. - 2, Group Name ISO/RTO Council (IRC) Standards Review Committee (SRC)

Answer	Yes
Document Name	

Comment
No comment.

Likes 0	
Dislikes 0	

Response

Clay Walker - Clay Walker On Behalf of: Robert Hirchak, Cleco Corporation, 6, 5, 1, 3; - Clay Walker	
Answer	Yes
Document Name	
Comment	
Cleco agrees with EEI comments.	
Likes 0	
Dislikes 0	
Response	
Hayk Zargaryan - Edison International - Southern California Edison Company - 1	
Answer	Yes
Document Name	
Comment	
See comments submitted by Edison Electric Institute.	
Likes 0	
Dislikes 0	
Response	
Todd Garwick - Edison International - Southern California Edison Company - 3	
Answer	Yes
Document Name	
Comment	
See comments submitted by Edison Electric Institute	
Likes 0	
Dislikes 0	
Response	
Naresh Latchman - Georgia System Operations Corporation - 3	
Answer	Yes

Document Name	
Comment	
There is no issue with performing a risk assessment every 36 months. However, Transmission Owners are not the appropriate registered entity to conduct planning analyses. Nor are the CIP standards the appropriate place to document planning analysis requirements. Planning studies should be governed within the TPL group of standards.	
Likes 0	
Dislikes 0	
Response	
Lori Frisk - Lori Frisk On Behalf of: Hillary Creurer, Allete - Minnesota Power, Inc., 1; - Lori Frisk	
Answer	Yes
Document Name	
Comment	
Minnesota Power supports the MRO NERC Standards Review Forum's (NSRF's) comments.	
Likes 0	
Dislikes 0	
Response	
Daniel Gacek - Exelon - 1, Group Name Exelon	
Answer	Yes
Document Name	
Comment	
Exelon agrees with the modifications to Requirement R5.	
Likes 0	
Dislikes 0	
Response	
Stephanie Kenny - Edison International - Southern California Edison Company - 6	
Answer	Yes
Document Name	

Comment	
See EEI Comments	
Likes 0	
Dislikes 0	
Response	
Dwanique Spiller - Berkshire Hathaway - NV Energy - 5	
Answer	Yes
Document Name	
Comment	
Likes 0	
Dislikes 0	
Response	
Donna Wood - Tri-State G and T Association, Inc. - 1	
Answer	Yes
Document Name	
Comment	
Likes 0	
Dislikes 0	
Response	
Jessica Cordero - Unisource - Tucson Electric Power Co. - 1	
Answer	Yes
Document Name	
Comment	
Likes 0	
Dislikes 0	

Response	
Amy Wilke - American Transmission Company, LLC - 1	
Answer	Yes
Document Name	
Comment	
Likes 0	
Dislikes 0	
Response	
Kevin Conway - Western Power Pool - 4	
Answer	Yes
Document Name	
Comment	
Likes 0	
Dislikes 0	
Response	
Tremayne Brown - ReliabilityFirst - 10	
Answer	Yes
Document Name	
Comment	
Likes 0	
Dislikes 0	
Response	
Rebika Yitna - Rebika Yitna On Behalf of: Roger Brand, MEAG Power, 3, 1; - Rebika Yitna	
Answer	Yes
Document Name	

Comment	
Likes 0	
Dislikes 0	
Response	
Matthew Nicklin - Southern Illinois Power Cooperative - 1,5 - SERC	
Answer	Yes
Document Name	
Comment	
Likes 0	
Dislikes 0	
Response	
Wendy Kalidass - U.S. Bureau of Reclamation - 5	
Answer	Yes
Document Name	
Comment	
Likes 0	
Dislikes 0	
Response	
Alison Nickells - NiSource - Northern Indiana Public Service Co. - 1	
Answer	Yes
Document Name	
Comment	
Likes 0	
Dislikes 0	
Response	

Karen Artola - CPS Energy - 1,3,5 - Texas RE	
Answer	Yes
Document Name	
Comment	
Likes 0	
Dislikes 0	
Response	
Tasha Ward - Midwest Reliability Organization - 10	
Answer	Yes
Document Name	
Comment	
Likes 0	
Dislikes 0	
Response	
Bob Cardle - Bob Cardle On Behalf of: Marco Rios, Pacific Gas and Electric Company, 3, 1, 5; Sandra Ellis, Pacific Gas and Electric Company, 3, 1, 5; Tyler Brun, Pacific Gas and Electric Company, 3, 1, 5; - Bob Cardle	
Answer	Yes
Document Name	
Comment	
Likes 0	
Dislikes 0	
Response	
Sarah Miller - FirstEnergy - FirstEnergy Corporation - 4, Group Name FE Voters	
Answer	Yes
Document Name	

Comment	
Likes 0	
Dislikes 0	
Response	
Amy Casuscelli - Xcel Energy, Inc. - 1,3,5,6 - MRO,WECC	
Answer	Yes
Document Name	
Comment	
Likes 0	
Dislikes 0	
Response	
Jennifer Wright - Sempra - San Diego Gas and Electric - 5	
Answer	Yes
Document Name	
Comment	
Likes 0	
Dislikes 0	
Response	
TRACEY JOHNSON - Southern Indiana Gas and Electric Co. - 3,5,6 - RF	
Answer	Yes
Document Name	
Comment	
Likes 0	
Dislikes 0	
Response	

Joshua London - Eversource Energy - 1, Group Name Eversource	
Answer	Yes
Document Name	
Comment	
Likes 0	
Dislikes 0	
Response	
Randy Peters - Manitoba Hydro - 1,3,5,6 - MRO	
Answer	Yes
Document Name	
Comment	
Likes 0	
Dislikes 0	
Response	
Thomas Brinckman - CenterPoint Energy Houston Electric, LLC - 1 - Texas RE	
Answer	Yes
Document Name	
Comment	
Likes 0	
Dislikes 0	
Response	
Dan Perry - TXNM Energy - 1,3,5 - WECC,Texas RE	
Answer	Yes
Document Name	
Comment	

Likes 0	
Dislikes 0	
Response	
Oshara Narangoda - Oshara Narangoda On Behalf of: Aditya Menon, Hydro One Networks, Inc., 1; - Oshara Narangoda	
Answer	Yes
Document Name	
Comment	
Likes 0	
Dislikes 0	
Response	
Said Sidiqi - Tennessee Valley Authority - 1,3,5,6 - SERC	
Answer	Yes
Document Name	
Comment	
Likes 0	
Dislikes 0	
Response	
Nathan Browder - Nathan Browder On Behalf of: Matt Lewis, Lower Colorado River Authority, 1, 5; - Nathan Browder	
Answer	Yes
Document Name	
Comment	
Likes 0	
Dislikes 0	
Response	

Carver Powers - Utility Services, Inc. - 4	
Answer	Yes
Document Name	
Comment	
Likes 0	
Dislikes 0	
Response	
Jodirah Green - ACES Power Marketing - 1,3,4,5,6 - MRO,WECC,Texas RE,SERC,RF, Group Name ACES Collaborators	
Answer	Yes
Document Name	
Comment	
Likes 0	
Dislikes 0	
Response	
Nick Leathers - Nick Leathers On Behalf of: David Jendras Sr, Ameren - Ameren Services, 3, 6, 1; - Nick Leathers	
Answer	Yes
Document Name	
Comment	
Likes 0	
Dislikes 0	
Response	
Jennifer Neville - Western Area Power Administration - 6	
Answer	Yes
Document Name	
Comment	

Likes 0	
Dislikes 0	
Response	
Joseph Scott - Lower Colorado River Authority - 5	
Answer	Yes
Document Name	
Comment	
Likes 0	
Dislikes 0	
Response	
Jodi Yeary - AEP - 3	
Answer	Yes
Document Name	
Comment	
Likes 0	
Dislikes 0	
Response	
John Pearson - ISO New England, Inc. - 2	
Answer	Yes
Document Name	
Comment	
Likes 0	
Dislikes 0	
Response	
Kennedy Meier - Electric Reliability Council of Texas, Inc. - 2	

Answer	Yes
Document Name	
Comment	
Likes 0	
Dislikes 0	
Response	
Laura Brignola - Constellation - 6	
Answer	
Document Name	
Comment	
Not Applicable to Constellation.	
Likes 0	
Dislikes 0	
Response	
Ronald Hoover - Bonneville Power Administration - 1,3,5,6 - WECC	
Answer	
Document Name	
Comment	

For the Implementation Plan section on Initial Performance of Periodic Requirements, BPA is concerned about the potential for having to re-do work under V3 and then shortly thereafter have to do similar work to comply with V4. This is a concern when there are many sites to put through the cycle. BPA requests that the implementation plan instead use the approach found in FAC-014-3: shall be implemented by the [Registered Entity] following the effective date of [the standard] when it begins its next cycle for conducting the studies [required by the standard].

BPA also seeks clarification on R5.2 concerning critical stations identified in prior risk assessments.

Additional Assessments and Duration: What specifically constitutes "additional assessments," and for what duration can these be forgone?

Trigger for New Risk Assessment: Does the Transmission Owner unilaterally determine when a new risk assessment is necessary, especially given that R5.3 and R7-R10 still apply "until a new risk assessment demonstrates otherwise"?

Likes 0	
Dislikes 0	

Response

Rachel Coyne - Texas Reliability Entity, Inc. - 10

Answer	
Document Name	

Comment

Texas RE noticed that the requirement language does not quite clarify how the terms inoperable and damaged should be reflected in the risk assessment as noted on page 4 of the SAR. It appears the SDT may be trying to address this in Requirement Part 3.1. The SDT could consider revising requirement part 3.1 to the following, which includes recommended changes in response to question #3 (in bold).

3.1 Documented criteria for assessing instability, uncontrolled separation, or Cascading within an Interconnection. The criteria shall include, at a minimum, the following:

3.1.1 technically justified thresholds identifying generation and load loss **that could cause instability, uncontrolled separation, or cascading** within the interconnection;

3.1.2 **Clarification of the terms "inoperable" and "damaged" as used in the risk assessment.**

Likes 0	
Dislikes 0	

Response

Khang Le - Seminole Electric Cooperative, Inc. - 1

Answer	
Document Name	

Comment

See comment in Question 8

Likes 0	
Dislikes 0	

Response

Lucinda Bradshaw - Lucinda Bradshaw On Behalf of: Byron Booker, Oncor Electric Delivery, 1; - Lucinda Bradshaw

Answer	
Document Name	
Comment	
Oncor Electric Delivery Company LLC has no new comments on the most recent revisions shown in 2023-06-cip-014-4-redline-to-last-posted-03312026.docx. Instead, Oncor incorporates by reference here its previous comments submitted herein on November 5, 2024 and July 21, 2025.	
Likes 0	
Dislikes 0	
Response	

6. Do you agree with the Implementation Plan for CIP-014-4? If you think an alternate timeframe is needed, please propose an alternate implementation plan with a detailed explanation.

Gail Elliott - Gail Elliott On Behalf of: Michael Moltane, International Transmission Company Holdings Corporation, 1; - Gail Elliott

Answer	No
Document Name	

Comment

ITC believes there could be issues with identifying all of the proximity stations soon enough to identify their configurations and clearing times soon enough to perform all of the required studies. This is more of an issue as entities add facilities in additional states. The number of coordination agreements could also cause an issue in obtaining all of the required documentation.

ITC recommends allowing 36 months for the implementation of the plan as several of the new proposed requirements will take significant time to prepare for prior to running the studies.

Likes 0	
Dislikes 0	

Response

Rachel Coyne - Texas Reliability Entity, Inc. - 10

Answer	No
Document Name	

Comment

Texas RE is concerned the implementation plan has a disconnect between the effective date and initial performance dates of Requirements R1 and R5. Texas RE also requests guidance on how this implementation plan works with the existing 36-month intervals for Requirements R1 and R5.

Texas RE notes that Requirement R1, which defines the process for identifying applicable Transmission stations or substations for use required risk assessments, does not specify an initial performance date. Absent an initial performance date, it is arguable that entities are not required to perform the first identification activities described in Requirement R1 until 36 calendar months following the effective date (that is, the interval period outlined in the specific requirement). However, the draft Implementation Plan states that the initial performance of the risk assessment activities required by the proposed Requirement R5 should occur by the effective date of the standard.

Importantly, however, those risk assessment activities in Requirement R5 explicitly contemplate using the station or substations identified through the Requirement R1 process. Per the language in the proposed Requirement R5, “each Transmission Owner shall perform a risk to identify applicable Transmission station(s) or Transmission substation(s) **identified in Requirement R1**” that if rendered inoperable would result in instability, uncontrolled separation, or cascading (emphasis added). Texas RE is concerned given the explicit expectation that entities perform at least some form of Requirement R1 identification activities prior to the risk assessment activities described in Requirement R5 that registered entities may be confused as the appropriate order of performance. For instance, one possible reading is that entities may use a current list of facilities for the initial performance of the new Requirement R5 risk assessment. Other registered entities may read the Requirement R1 identification process as subsumed with the Requirement R5 risk assessment and perform all those steps prior to the effective and initial performance date. In order to avoid potential inconsistent applications of the proposed standard language, Texas RE recommends that the SDT clarify whether the expectation is for a new Requirement R1

station and substation identification process should be performed in support of the initial performance of the proposed Requirement R5 risk assessment process or if the previously existing Requirement R1 stations and substations may be used.

Texas RE also inquires as to how this implementation plan considers that currently-registered applicable entities are required to this work under CIP-014-3. Does the timeline for Requirement R1 and Requirement R5 start over once CIP-014-4 is approved? Texas RE requests the drafting team provide guidance on the relationship between current activities and the implementation plan for CIP-014-4.

Lastly, Texas RE recommends the drafting team reference the practice guide regarding use of the term “calendar months.”

Likes 0	
Dislikes 0	

Response

Amy Casuscelli - Xcel Energy, Inc. - 1,3,5,6 - MRO,WECC

Answer	No
Document Name	

Comment

Xcel Energy supports EEI Comments

Likes 0	
Dislikes 0	

Response

Ronald Hoover - Bonneville Power Administration - 1,3,5,6 - WECC

Answer	No
Document Name	

Comment

BPA disagrees with the proposed implementation plan. The current 24-month timeline may be insufficient for Transmission Owners to complete their next assessment under the new standard. Therefore, we recommend extending the implementation plan to 36 months or more.

Likes 0	
Dislikes 0	

Response

Wendy Kalidass - U.S. Bureau of Reclamation - 5

Answer	No
Document Name	
Comment	

Reclamation recommends revising the Implementation Plan for Initial Performance of Periodic Requirements, noting concerns about duplicating work under V3 and V4, especially with many sites involved.

Additionally, Reclamation recommends adopting the FAC-014-3 approach for the implementation plan: requirements should be implemented by the [Registered Entity] at the start of its next study cycle following the effective date of [the standard].

Likes 0	
Dislikes 0	
Response	
Stephanie Kenny - Edison International - Southern California Edison Company - 6	
Answer	Yes
Document Name	
Comment	

See EEI Comments

Likes 0	
Dislikes 0	
Response	
Daniel Gacek - Exelon - 1, Group Name Exelon	
Answer	Yes
Document Name	
Comment	

Exelon agrees with the Implementation Plan, however the EEI comments highlight a concern that some entities my be required to complete assessments for CIP-014-3 and CIP-014-4 in the same timeframe.

Exelon supports the clarifications suggested in the EEI comments included below:

A Transmission Owner may perform a risk assessment consistent with CIP-014-4 at any time following approval of CIP-014-4 by the appropriate regulatory authority. Where such an assessment is completed during the implementation period and prior to the effective date of CIP-014-4, that assessment shall be deemed acceptable for purposes of satisfying any then-applicable periodic risk assessment due date under CIP-014-3.

If a Transmission Owner completes a risk assessment consistent with CIP-014-4 prior to the effective date of CIP-014-4, and that assessment is completed within the Transmission Owner's then-applicable CIP-014-3 periodic risk assessment interval, the assessment shall satisfy the periodic risk assessment obligation in CIP-014-3 Requirement R1.

No additional or separate CIP-014-3 risk assessment is required to meet the CIP-014-3 periodic due date in this circumstance.

The completion date of a CIP-014-4 risk assessment used to satisfy a CIP-014-3 periodic requirement shall establish the start date for the applicable entity's next periodic risk assessment interval under CIP-014-4.

A CIP-014-4 risk assessment completed during the implementation period and used to satisfy a CIP-014-3 periodic due date shall remain valid following the retirement of CIP-014-3.

Likes 0	
Dislikes 0	

Response

Lori Frisk - Lori Frisk On Behalf of: Hillary Creurer, Allete - Minnesota Power, Inc., 1; - Lori Frisk

Answer	Yes
Document Name	

Comment

Minesota Power supports EEI's comments

Likes 0	
Dislikes 0	

Response

Todd Garwick - Edison International - Southern California Edison Company - 3

Answer	Yes
Document Name	

Comment

See comments submitted by Edison Electric Institute

Likes 0	
Dislikes 0	

Response

Hayk Zargaryan - Edison International - Southern California Edison Company - 1

Answer	Yes
Document Name	
Comment	
See comments submitted by Edison Electric Institute.	
Likes 0	
Dislikes 0	
Response	
Nick Leathers - Nick Leathers On Behalf of: David Jendras Sr, Ameren - Ameren Services, 3, 6, 1; - Nick Leathers	
Answer	Yes
Document Name	
Comment	
Ameren would like more clarity around whether a study performed for Version 4 would satisfy the requirement for Version 3 (When would you have to do the first study under version 4?).	
Likes 0	
Dislikes 0	
Response	
Clay Walker - Clay Walker On Behalf of: Robert Hirchak, Cleco Corporation, 6, 5, 1, 3; - Clay Walker	
Answer	Yes
Document Name	
Comment	
Cleco agrees with EEI comments.	
Likes 0	
Dislikes 0	
Response	
Timothy Singh - Timothy Singh On Behalf of: Israel Perez, Salt River Project, 6, 3, 5, 1; Jennifer Bennett, Salt River Project, 6, 3, 5, 1; Laura Somak, Salt River Project, 6, 3, 5, 1; Matthew Jaramilla, Salt River Project, 6, 3, 5, 1; - Timothy Singh	
Answer	Yes

Document Name	
Comment	
Although SRP agrees with the Implementation plan, a 36-month timeframe would be more appropriate, given the 36-month assessment cycle.	
Likes 0	
Dislikes 0	
Response	
Kirsten Rowley - Midcontinent ISO, Inc. - 2, Group Name ISO/RTO Council (IRC) Standards Review Committee (SRC)	
Answer	Yes
Document Name	
Comment	
No comment.	
Likes 0	
Dislikes 0	
Response	
Andrea Koch - Edison Electric Institute - NA - Not Applicable - NA - Not Applicable	
Answer	Yes
Document Name	
Comment	
EEI agrees with the Implementation Plan but proposes the following language to provide clarity regarding the performance of CIP-014 Assessments prior to the effective date of CIP-014-4. **A Transmission Owner may perform a physical security risk assessment consistent with CIP-014-4 at any time following approval of CIP-014-4 by the appropriate regulatory authority. Where such an assessment is completed during the implementation period and prior to the effective date of CIP-014-4, that assessment shall be deemed acceptable for purposes of satisfying any then-applicable periodic physical security risk assessment due date under CIP-014-3.** **If a Transmission Owner completes a physical security risk assessment consistent with CIP-014-4 prior to the effective date of CIP-014-4, and that assessment is completed within the Transmission Owner's then-applicable CIP-014-3 periodic risk assessment interval, the assessment shall satisfy the periodic risk assessment obligation in CIP-014-3 Requirement R1.** **No additional or separate CIP-014-3 risk assessment is required to meet the CIP-014-3 periodic due date in this circumstance.**	

The completion date of a CIP-014-4 risk assessment used to satisfy a CIP-014-3 periodic requirement shall establish the start date for the applicable entity's next periodic physical security risk assessment interval under CIP-014-4.

A CIP-014-4 risk assessment completed during the implementation period and used to satisfy a CIP-014-3 periodic due date shall remain valid following the retirement of CIP-014-3.

Likes 0	
Dislikes 0	

Response

Dan Perry - TXNM Energy - 1,3,5 - WECC,Texas RE

Answer	Yes
Document Name	

Comment

TXNM Energy agrees with EEI submitted comments repeated below.

EEI agrees with the Implementation Plan but proposes the following language to provide clarity regarding the performance of CIP-014 Assessments prior to the effective date of CIP-014-4.

A Transmission Owner may perform a physical security risk assessment consistent with CIP-014-4 at any time following approval of CIP-014-4 by the appropriate regulatory authority. Where such an assessment is completed during the implementation period and prior to the effective date of CIP-014-4, that assessment shall be deemed acceptable for purposes of satisfying any then-applicable periodic physical security risk assessment due date under CIP-014-3.

If a Transmission Owner completes a physical security risk assessment consistent with CIP-014-4 prior to the effective date of CIP-014-4, and that assessment is completed within the Transmission Owner's then-applicable CIP-014-3 periodic risk assessment interval, the assessment shall satisfy the periodic risk assessment obligation in CIP-014-3 Requirement R1.

No additional or separate CIP-014-3 risk assessment is required to meet the CIP-014-3 periodic due date in this circumstance.

The completion date of a CIP-014-4 risk assessment used to satisfy a CIP-014-3 periodic requirement shall establish the start date for the applicable entity's next periodic physical security risk assessment interval under CIP-014-4.

A CIP-014-4 risk assessment completed during the implementation period and used to satisfy a CIP-014-3 periodic due date shall remain valid following the retirement of CIP-014-3.

Likes 0	
Dislikes 0	

Response

Alan Kloster - Alan Kloster On Behalf of: Jeremy Harris, Evergy, 3, 5, 1, 6; Kevin Frick, Evergy, 3, 5, 1, 6; Marcus Moor, Evergy, 3, 5, 1, 6; Tiffany Lake, Evergy, 3, 5, 1, 6; - Alan Kloster

Answer	Yes
Document Name	
Comment	
Evergy supports and incorporates by reference the comments of the Edison Electric Institute (EEI) for question #6.	
Likes 0	
Dislikes 0	
Response	
Joseph Gatten - Great River Energy - 3, Group Name Great River Energy	
Answer	Yes
Document Name	
Comment	
No additional comment.	
Likes 0	
Dislikes 0	
Response	
Rachel Schuldt - Black Hills Corporation - 6, Group Name Black Hills Corporation - All Segments	
Answer	Yes
Document Name	
Comment	
Black Hills Corporation agrees with the Implementation Plan.	
Likes 0	
Dislikes 0	
Response	
Sarah Miller - FirstEnergy - FirstEnergy Corporation - 4, Group Name FE Voters	
Answer	Yes
Document Name	

Comment
FirstEnergy supports EEI comments which state:" EEI agrees with the Implementation Plan but proposes the following language to provide clarity regarding the performance of CIP-014 Assessments prior to the effective date of CIP-014-4. MEMBER FEEDBACK: **A Transmission Owner may perform a physical security risk assessment consistent with CIP-014-4 at any time following approval of CIP-014-4 by the appropriate regulatory authority. Where such an assessment is completed during the implementation period and prior to the effective date of CIP-014-4, that assessment shall be deemed acceptable for purposes of satisfying any then-applicable periodic physical security risk assessment due date under CIP-014-3.** **If a Transmission Owner completes a physical security risk assessment consistent with CIP-014-4 prior to the effective date of CIP-014-4, and that assessment is completed within the Transmission Owner's then-applicable CIP-014-3 periodic risk assessment interval, the assessment shall satisfy the periodic risk assessment obligation in CIP-014-3 Requirement R1.** **No additional or separate CIP-014-3 risk assessment is required to meet the CIP-014-3 periodic due date in this circumstance.** **The completion date of a CIP-014-4 risk assessment used to satisfy a CIP-014-3 periodic requirement shall establish the start date for the applicable entity's next periodic physical security risk assessment interval under CIP-014-4.** **A CIP-014-4 risk assessment completed during the implementation period and used to satisfy a CIP-014-3 periodic due date shall remain valid following the retirement of CIP-014-3.**

Likes 0	
Dislikes 0	

Response

Kelly Heims - Central Iowa Power Cooperative - 1	
Answer	Yes
Document Name	

Comment
Central Iowa Power Cooperative supports the MRO's NERC Standards Review Forum (NSRF) and ACES comments for Question 6.

Likes 0	
Dislikes 0	

Response

Misty Carneal - Duke Energy - 1,3,5,6 - SERC,RF	
Answer	Yes
Document Name	

Comment	
Duke Energy supports the modifications.	
Likes 0	
Dislikes 0	
Response	
Kennedy Meier - Electric Reliability Council of Texas, Inc. - 2	
Answer	Yes
Document Name	
Comment	
Likes 0	
Dislikes 0	
Response	
John Pearson - ISO New England, Inc. - 2	
Answer	Yes
Document Name	
Comment	
Likes 0	
Dislikes 0	
Response	
Constantin Chitescu - Ontario Power Generation Inc. - 5	
Answer	Yes
Document Name	
Comment	
Likes 0	
Dislikes 0	

Response	
Naresh Latchman - Georgia System Operations Corporation - 3	
Answer	Yes
Document Name	
Comment	
Likes 0	
Dislikes 0	
Response	
Jodi Yeary - AEP - 3	
Answer	Yes
Document Name	
Comment	
Likes 0	
Dislikes 0	
Response	
Joseph Scott - Lower Colorado River Authority - 5	
Answer	Yes
Document Name	
Comment	
Likes 0	
Dislikes 0	
Response	
Ruida Shu - Northeast Power Coordinating Council - 10, Group Name NPCC RSC	
Answer	Yes
Document Name	

Comment	
Likes 0	
Dislikes 0	
Response	
Jennifer Neville - Western Area Power Administration - 6	
Answer	Yes
Document Name	
Comment	
Likes 0	
Dislikes 0	
Response	
Jodirah Green - ACES Power Marketing - 1,3,4,5,6 - MRO,WECC,Texas RE,SERC,RF, Group Name ACES Collaborators	
Answer	Yes
Document Name	
Comment	
Likes 0	
Dislikes 0	
Response	
Carver Powers - Utility Services, Inc. - 4	
Answer	Yes
Document Name	
Comment	
Likes 0	
Dislikes 0	
Response	

Nathan Browder - Nathan Browder On Behalf of: Matt Lewis, Lower Colorado River Authority, 1, 5; - Nathan Browder	
Answer	Yes
Document Name	
Comment	
Likes 0	
Dislikes 0	
Response	
Said Sidiqi - Tennessee Valley Authority - 1,3,5,6 - SERC	
Answer	Yes
Document Name	
Comment	
Likes 0	
Dislikes 0	
Response	
Oshara Narangoda - Oshara Narangoda On Behalf of: Aditya Menon, Hydro One Networks, Inc., 1; - Oshara Narangoda	
Answer	Yes
Document Name	
Comment	
Likes 0	
Dislikes 0	
Response	
Matt Bullard - Dominion - Dominion Virginia Power - 3, Group Name Dominion Energy	
Answer	Yes
Document Name	
Comment	

Likes 0	
Dislikes 0	
Response	
Thomas Brinckman - CenterPoint Energy Houston Electric, LLC - 1 - Texas RE	
Answer	Yes
Document Name	
Comment	
Likes 0	
Dislikes 0	
Response	
Randy Peters - Manitoba Hydro - 1,3,5,6 - MRO	
Answer	Yes
Document Name	
Comment	
Likes 0	
Dislikes 0	
Response	
Joshua London - Eversource Energy - 1, Group Name Eversource	
Answer	Yes
Document Name	
Comment	
Likes 0	
Dislikes 0	
Response	

Chantal Mazza - Chantal Mazza On Behalf of: Junji Yamaguchi, Hydro-Quebec (HQ), 1, 5; Nicolas Turcotte, Hydro-Quebec (HQ), 1, 5; - Chantal Mazza	
Answer	Yes
Document Name	
Comment	
Likes 0	
Dislikes 0	
Response	
Isidoro Behar - Long Island Power Authority - 1	
Answer	Yes
Document Name	
Comment	
Likes 0	
Dislikes 0	
Response	
Daniel Valle - New York Power Authority - 1	
Answer	Yes
Document Name	
Comment	
Likes 0	
Dislikes 0	
Response	
Zahid Qayyum - New York Power Authority - 5	
Answer	Yes
Document Name	
Comment	

Likes 0	
Dislikes 0	
Response	
TRACEY JOHNSON - Southern Indiana Gas and Electric Co. - 3,5,6 - RF	
Answer	Yes
Document Name	
Comment	
Likes 0	
Dislikes 0	
Response	
Katrina Lyons - Georgia System Operations Corporation - 4	
Answer	Yes
Document Name	
Comment	
Likes 0	
Dislikes 0	
Response	
Jennifer Wright - Sempra - San Diego Gas and Electric - 5	
Answer	Yes
Document Name	
Comment	
Likes 0	
Dislikes 0	
Response	

Tamarra Hardie - Public Utility District No. 1 of Chelan County - 6, Group Name CHPD	
Answer	Yes
Document Name	
Comment	
Likes 0	
Dislikes 0	
Response	
Jeffrey Streifling - NB Power Corporation - 1	
Answer	Yes
Document Name	
Comment	
Likes 0	
Dislikes 0	
Response	
Bob Cardle - Bob Cardle On Behalf of: Marco Rios, Pacific Gas and Electric Company, 3, 1, 5; Sandra Ellis, Pacific Gas and Electric Company, 3, 1, 5; Tyler Brun, Pacific Gas and Electric Company, 3, 1, 5; - Bob Cardle	
Answer	Yes
Document Name	
Comment	
Likes 0	
Dislikes 0	
Response	
Tasha Ward - Midwest Reliability Organization - 10	
Answer	Yes
Document Name	
Comment	

Likes 0	
Dislikes 0	
Response	
Stephen Stafford - Stephen Stafford On Behalf of: Greg Davis, Georgia Transmission Corporation, 1; - Stephen Stafford	
Answer	Yes
Document Name	
Comment	
Likes 0	
Dislikes 0	
Response	
Anna Martinson - MRO - 1,2,3,4,5,6 - MRO, Group Name MRO Group	
Answer	Yes
Document Name	
Comment	
Likes 0	
Dislikes 0	
Response	
Karen Artola - CPS Energy - 1,3,5 - Texas RE	
Answer	Yes
Document Name	
Comment	
Likes 0	
Dislikes 0	
Response	

Alison Nickells - NiSource - Northern Indiana Public Service Co. - 1	
Answer	Yes
Document Name	
Comment	
Likes 0	
Dislikes 0	
Response	
Alyssia Rhoads - Public Utility District No. 1 of Snohomish County - 1	
Answer	Yes
Document Name	
Comment	
Likes 0	
Dislikes 0	
Response	
Matthew Nicklin - Southern Illinois Power Cooperative - 1,5 - SERC	
Answer	Yes
Document Name	
Comment	
Likes 0	
Dislikes 0	
Response	
Rebika Yitna - Rebika Yitna On Behalf of: Roger Brand, MEAG Power, 3, 1; - Rebika Yitna	
Answer	Yes
Document Name	
Comment	

Likes 0	
Dislikes 0	
Response	
Tremayne Brown - ReliabilityFirst - 10	
Answer	Yes
Document Name	
Comment	
Likes 0	
Dislikes 0	
Response	
Kevin Conway - Western Power Pool - 4	
Answer	Yes
Document Name	
Comment	
Likes 0	
Dislikes 0	
Response	
Amy Wilke - American Transmission Company, LLC - 1	
Answer	Yes
Document Name	
Comment	
Likes 0	
Dislikes 0	
Response	
Jessica Cordero - Unisource - Tucson Electric Power Co. - 1	

Answer	Yes
Document Name	
Comment	
Likes 0	
Dislikes 0	
Response	
Donna Wood - Tri-State G and T Association, Inc. - 1	
Answer	Yes
Document Name	
Comment	
Likes 0	
Dislikes 0	
Response	
Dwanique Spiller - Berkshire Hathaway - NV Energy - 5	
Answer	Yes
Document Name	
Comment	
Likes 0	
Dislikes 0	
Response	
Nikki Carson-Marquis - Nikki Carson-Marquis On Behalf of: Theresa Allard, Minnkota Power Cooperative Inc., 1; - Nikki Carson-Marquis	
Answer	
Document Name	
Comment	

MPC believes a 36-month implementation timeframe would be more appropriate given the 36-month cycle proposed in Requirement R1, but understands the Standard Drafting Team's reasons for choosing the 24-month implementation.	
Likes 0	
Dislikes 0	
Response	
Lucinda Bradshaw - Lucinda Bradshaw On Behalf of: Byron Booker, Oncor Electric Delivery, 1; - Lucinda Bradshaw	
Answer	
Document Name	
Comment	
Oncor Electric Delivery Company LLC has no new comments on the Implementation Plan for CIP-014-4. Instead, Oncor incorporates by reference here its previous comments submitted herein on November 5, 2024 and July 21, 2025	
Likes 0	
Dislikes 0	
Response	
Khang Le - Seminole Electric Cooperative, Inc. - 1	
Answer	
Document Name	
Comment	
See comment in Question 8	
Likes 0	
Dislikes 0	
Response	
Laura Brignola - Constellation - 6	
Answer	
Document Name	
Comment	

Not Applicable to Constellation.

Likes 0	
Dislikes 0	

Response

7. Do you believe there are alternatives or more cost-effective options to address the recommendations in CIP-014-4 to address the reliability issue of physical security? If so, please provide your recommendation and, if appropriate, technical, or procedural justification.

Anna Martinson - MRO - 1,2,3,4,5,6 - MRO, Group Name MRO Group

Answer	No
Document Name	

Comment

MRO NSRF does not have any comments.

Likes 0	
Dislikes 0	

Response

Kelly Heims - Central Iowa Power Cooperative - 1

Answer	No
Document Name	

Comment

Central Iowa Power Cooperative supports the MRO's NERC Standards Review Forum (NSRF) and ACES comments for Question 7.

Likes 0	
Dislikes 0	

Response

Joseph Gatten - Great River Energy - 3, Group Name Great River Energy

Answer	No
Document Name	

Comment

No additional comment.

Likes 0	
Dislikes 0	

Response

Misty Carneal - Duke Energy - 1,3,5,6 - SERC,RF	
Answer	No
Document Name	
Comment	
Likes 0	
Dislikes 0	
Response	
Jessica Cordero - Unisource - Tucson Electric Power Co. - 1	
Answer	No
Document Name	
Comment	
Likes 0	
Dislikes 0	
Response	
Amy Wilke - American Transmission Company, LLC - 1	
Answer	No
Document Name	
Comment	
Likes 0	
Dislikes 0	
Response	
Kevin Conway - Western Power Pool - 4	
Answer	No
Document Name	
Comment	

Likes 0	
Dislikes 0	
Response	
Rebika Yitna - Rebika Yitna On Behalf of: Roger Brand, MEAG Power, 3, 1; - Rebika Yitna	
Answer	No
Document Name	
Comment	
Likes 0	
Dislikes 0	
Response	
Matthew Nicklin - Southern Illinois Power Cooperative - 1,5 - SERC	
Answer	No
Document Name	
Comment	
Likes 0	
Dislikes 0	
Response	
Wendy Kalidass - U.S. Bureau of Reclamation - 5	
Answer	No
Document Name	
Comment	
Likes 0	
Dislikes 0	
Response	
Alison Nickells - NiSource - Northern Indiana Public Service Co. - 1	

Answer	No
Document Name	
Comment	
Likes 0	
Dislikes 0	
Response	
Tasha Ward - Midwest Reliability Organization - 10	
Answer	No
Document Name	
Comment	
Likes 0	
Dislikes 0	
Response	
Jennifer Wright - Sempra - San Diego Gas and Electric - 5	
Answer	No
Document Name	
Comment	
Likes 0	
Dislikes 0	
Response	
Alan Kloster - Alan Kloster On Behalf of: Jeremy Harris, Evergy, 3, 5, 1, 6; Kevin Frick, Evergy, 3, 5, 1, 6; Marcus Moor, Evergy, 3, 5, 1, 6; Tiffany Lake, Evergy, 3, 5, 1, 6; - Alan Kloster	
Answer	No
Document Name	
Comment	

Likes 0	
Dislikes 0	
Response	
Dan Perry - TXNM Energy - 1,3,5 - WECC,Texas RE	
Answer	No
Document Name	
Comment	
Likes 0	
Dislikes 0	
Response	
Said Sidiqi - Tennessee Valley Authority - 1,3,5,6 - SERC	
Answer	No
Document Name	
Comment	
Likes 0	
Dislikes 0	
Response	
Nathan Browder - Nathan Browder On Behalf of: Matt Lewis, Lower Colorado River Authority, 1, 5; - Nathan Browder	
Answer	No
Document Name	
Comment	
Likes 0	
Dislikes 0	
Response	
Jodirah Green - ACES Power Marketing - 1,3,4,5,6 - MRO,WECC,Texas RE,SERC,RF, Group Name ACES Collaborators	

Answer	No
Document Name	
Comment	
Likes 0	
Dislikes 0	
Response	
Jennifer Neville - Western Area Power Administration - 6	
Answer	No
Document Name	
Comment	
Likes 0	
Dislikes 0	
Response	
Joseph Scott - Lower Colorado River Authority - 5	
Answer	No
Document Name	
Comment	
Likes 0	
Dislikes 0	
Response	
Lori Frisk - Lori Frisk On Behalf of: Hillary Creurer, Allete - Minnesota Power, Inc., 1; - Lori Frisk	
Answer	No
Document Name	
Comment	
Likes 0	

Dislikes 0	

Response

Alyssia Rhoads - Public Utility District No. 1 of Snohomish County - 1	
Answer	Yes
Document Name	

Comment
SNPD recognizes the increased financial burden associated with performing risk assessments every 36 months, rather than every 60 months, for Transmission Owners that have not identified any applicable Transmission stations or substations. This burden is further amplified by the requirement to have each assessment verified by an unaffiliated third party at the same increased frequency. SNPD believes there are more cost-effective alternatives to address the physical security reliability objectives of CIP-014-4. Specifically, SNPD recommends maintaining a risk-based, performance-oriented approach by retaining the existing 60-month assessment interval for Transmission Owners that have not previously identified any applicable facilities. For these entities, historical assessments have demonstrated a low likelihood of identifying critical assets, and increasing the frequency does not provide a commensurate reliability benefit. Additionally, SNPD recommends that enhanced requirements, such as performing risk assessments every 36 months and requiring third-party verification, be applied only to entities that have previously identified critical Transmission stations or substations, or where system changes indicate a higher risk profile. This targeted, risk-based approach would better align regulatory requirements with actual system risk and improve overall cost-effectiveness. SNPD also supports continued inclusion of planned Transmission stations and substations expected to be placed in service within the assessment window, ensuring that future system changes are appropriately evaluated without imposing unnecessary burdens on entities with consistently low-risk profiles. Overall, a tiered, risk-informed framework would more effectively balance reliability objectives with cost considerations, while avoiding unnecessary regulatory and financial impacts on entities unlikely to identify CIP-014 critical facilities.

Likes 0	
Dislikes 0	

Response

Stephen Stafford - Stephen Stafford On Behalf of: Greg Davis, Georgia Transmission Corporation, 1; - Stephen Stafford	
Answer	Yes
Document Name	

Comment
Currently, CIP-014 requires Transmission Owners to conduct planning analyses, and then have these analyses reviewed by a third party verifier. Requirement 6.1 states the the third party verifier must be a registered Planning Coordinator, Transmission Planner, Reliability Coordinator, or have transmission planning or analysis experience. Therefore, instead of a planning entity performing the study, the TO must pay a third party to verify the assessment and now at a higher frequency (36 month vs 60 month).

Likes 0	
Dislikes 0	
Response	
Bob Cardle - Bob Cardle On Behalf of: Marco Rios, Pacific Gas and Electric Company, 3, 1, 5; Sandra Ellis, Pacific Gas and Electric Company, 3, 1, 5; Tyler Brun, Pacific Gas and Electric Company, 3, 1, 5; - Bob Cardle	
Answer	Yes
Document Name	
Comment	
PG&E does not comment on cost effectiveness.	
Likes 0	
Dislikes 0	
Response	
Jeffrey Streifling - NB Power Corporation - 1	
Answer	Yes
Document Name	
Comment	
As noted above.	
Likes 0	
Dislikes 0	
Response	
Tamarra Hardie - Public Utility District No. 1 of Chelan County - 6, Group Name CHPD	
Answer	Yes
Document Name	
Comment	
The current standard treats physical security measures as the default solution and does not clearly allow for system-level mitigations. In many cases, lower cost options could be available. Take a system issue for example that leads to instability could instead be resolved by changing relay settings to be more sensitive when normally redundant communication is lost, this would lead to an inexpensive solution to fix the problem, whereas a physical barrier such as a fence does not address the risk exposure of the lines leaving the station. It is strongly recommended that the standard includes some sort of concept where utilities could alternately identify solutions, as confirmed by the 3rd party, in lieu of directly going to the physical security step. As	

written, the standard does not prohibit system-level solutions, but it also does not acknowledge them or present them as viable alternatives to physical security measures. This lack of clarity limits the opportunity to pursue effective, lower-cost fixes that directly address the underlying issue.

More technical guidance from NERC on damage distances for a variety of bomb threat types is recommended and modifying the distance requirement in R2 to be based upon damage thresholds rather than personnel evacuation mandates. Additionally in R2, allowing utilities the flexibility to provide rationale in their CIP-014 assessments for why any identified proximate stations within the provided distance should be excluded or if any different distances are used would lead to more realistic physical security scenarios being assessed and reduce the cost-burden of assessing scenarios that are beyond reasonable damage distances.

Likes 0	
Dislikes 0	

Response

Katrina Lyons - Georgia System Operations Corporation - 4

Answer	Yes
Document Name	

Comment

Currently, CIP-014 requires Transmission Owners to conduct planning analyses, and then have these analyses reviewed by a third party verifier. Requirement 6.1 states the the third party verifier must be a registered Planning Coordinator, Transmission Planner, Reliability Coordinator, or have transmission planning or analysis experience. Therefore, instead of a planning entity performing the study, the TO must pay a third party to verify the assessment and now at a higher frequency (36 month vs 60 month).

Likes 0	
Dislikes 0	

Response

Isidoro Behar - Long Island Power Authority - 1

Answer	Yes
Document Name	

Comment

Similar to TPL-001-5.1 Requirement 2.6, we recommend that the SDT consider, and if applicable, outline under which specific circumstances past studies/results can be utilized for the CIP-014-4 risk assessment.

The possible use of past studies may reduce workload of entities and support a more cost effective option to address CIP-014-4 needs.

Likes 0	
Dislikes 0	

Response

Randy Peters - Manitoba Hydro - 1,3,5,6 - MRO	
Answer	Yes
Document Name	
Comment	
See our comments for Q3	
Likes 0	
Dislikes 0	
Response	
Timothy Singh - Timothy Singh On Behalf of: Israel Perez, Salt River Project, 6, 3, 5, 1; Jennifer Bennett, Salt River Project, 6, 3, 5, 1; Laura Somak, Salt River Project, 6, 3, 5, 1; Matthew Jaramilla, Salt River Project, 6, 3, 5, 1; - Timothy Singh	
Answer	Yes
Document Name	
Comment	
There needs to be much more clarification regarding the issue raised in the comments. The Standard has changed a lot since the last iteration but so have threats and the means to mitigate them. If the Standard considered some of the ideas and clarifications brought up by SRP and others, it would be for the betterment of the industry.	
Likes 0	
Dislikes 0	
Response	
Gail Elliott - Gail Elliott On Behalf of: Michael Moltane, International Transmission Company Holdings Corporation, 1; - Gail Elliott	
Answer	Yes
Document Name	
Comment	
The requirement for documentation for joint station is not cost effective. Requiring all entities to provide this documentation for historic stations is an administrative burden. This requirement should only be applicable to those entities who failed to perform a risk assessment for a joint station. The requirement to include proximity stations owned by other entities puts unreasonable requirements on the TO as other entities may not willingly provide, and may not be bound by CIP-14 to provide, documentation for those stations. In addition, it places unreasonable burden on the TO to field visit and identify proximity stations prior to studies each cycle. ITC suggests narrowing the scope to existing BES Transmission station(s) and BES	

Transmission substation(s) which are owned by the applicable entity, or including a requirement that neighboring entities are required to provide station names and GIS locations.

Likes 0	
Dislikes 0	

Response

Naresh Latchman - Georgia System Operations Corporation - 3

Answer	Yes
Document Name	

Comment

Currently, CIP-014 requires Transmission Owners to conduct planning analyses, and then have these analyses reviewed by a third party verifier. Requirement 6.1 states the the third party verifier must be a registered Planning Coordinator, Transmission Planner, Reliability Coordinator, or have transmission planning or analysis experience. Therefore, instead of a planning entity performing the study, the TO must pay a third party to verify the assessment and now at a higher frequency (36 month vs 60 month).

Likes 0	
Dislikes 0	

Response

Nikki Carson-Marquis - Nikki Carson-Marquis On Behalf of: Theresa Allard, Minnkota Power Cooperative Inc., 1; - Nikki Carson-Marquis

Answer	Yes
Document Name	

Comment

MPC continues to oppose the change from a 60-month timeframe to a 36-month timeframe in proposed Requirement R1 for utilities who have not previously identified stations or substations as critical.

Likes 0	
Dislikes 0	

Response

Donna Wood - Tri-State G and T Association, Inc. - 1

Answer	Yes
Document Name	

Comment

Likes 0	
Dislikes 0	
Response	
Tremayne Brown - ReliabilityFirst - 10	
Answer	Yes
Document Name	
Comment	
Likes 0	
Dislikes 0	
Response	
Karen Artola - CPS Energy - 1,3,5 - Texas RE	
Answer	Yes
Document Name	
Comment	
Likes 0	
Dislikes 0	
Response	
Sarah Miller - FirstEnergy - FirstEnergy Corporation - 4, Group Name FE Voters	
Answer	Yes
Document Name	
Comment	
Likes 0	
Dislikes 0	
Response	

Oshara Narangoda - Oshara Narangoda On Behalf of: Aditya Menon, Hydro One Networks, Inc., 1; - Oshara Narangoda	
Answer	Yes
Document Name	
Comment	
Likes 0	
Dislikes 0	
Response	
Carver Powers - Utility Services, Inc. - 4	
Answer	Yes
Document Name	
Comment	
Likes 0	
Dislikes 0	
Response	
John Pearson - ISO New England, Inc. - 2	
Answer	Yes
Document Name	
Comment	
Likes 0	
Dislikes 0	
Response	
Laura Brignola - Constellation - 6	
Answer	
Document Name	
Comment	

Not Applicable to Constellation.	
Likes 0	
Dislikes 0	
Response	
Dwanique Spiller - Berkshire Hathaway - NV Energy - 5	
Answer	
Document Name	
Comment	
Unknown at this time.	
Likes 0	
Dislikes 0	
Response	
Rachel Schuldt - Black Hills Corporation - 6, Group Name Black Hills Corporation - All Segments	
Answer	
Document Name	
Comment	
Black Hills Corporation will not comment on cost effectiveness.	
Likes 0	
Dislikes 0	
Response	
Andrea Koch - Edison Electric Institute - NA - Not Applicable - NA - Not Applicable	
Answer	
Document Name	
Comment	
EEI does not comment on cost.	

Likes 0	
Dislikes 0	
Response	
Kirsten Rowley - Midcontinent ISO, Inc. - 2, Group Name ISO/RTO Council (IRC) Standards Review Committee (SRC)	
Answer	
Document Name	
Comment	
No comment.	
Likes 0	
Dislikes 0	
Response	
Nick Leathers - Nick Leathers On Behalf of: David Jendras Sr, Ameren - Ameren Services, 3, 6, 1; - Nick Leathers	
Answer	
Document Name	
Comment	
Ameren has no comments on the cost effectiveness of the project.	
Likes 0	
Dislikes 0	
Response	
Hayk Zargaryan - Edison International - Southern California Edison Company - 1	
Answer	
Document Name	
Comment	
See comments submitted by Edison Electric Institute.	
Likes 0	
Dislikes 0	

Response
Khang Le - Seminole Electric Cooperative, Inc. - 1
Answer	
Document Name	
Comment
See comment in Question 8
Likes 0	
Dislikes 0	
Response
Lucinda Bradshaw - Lucinda Bradshaw On Behalf of: Byron Booker, Oncor Electric Delivery, 1; - Lucinda Bradshaw
Answer	
Document Name	
Comment
Oncor incorporates by reference here its previous comments submitted herein on November 5, 2024 and July 21, 2025.
Likes 0	
Dislikes 0	
Response

8. Provide any additional comments for the drafting team to consider, if desired.	
Nikki Carson-Marquis - Nikki Carson-Marquis On Behalf of: Theresa Allard, Minnkota Power Cooperative Inc., 1; - Nikki Carson-Marquis	
Answer	
Document Name	
Comment	
MPC supports the MRO NERC Standard Review Forum (NSRF) comment recommending a new SAR be drafted to remove the third-party peer-review requirements or to increase the timeframes for reviews in R2/proposed R6 and R6/proposed R10.	
Likes 0	
Dislikes 0	
Response	
Stephanie Kenny - Edison International - Southern California Edison Company - 6	
Answer	
Document Name	
Comment	
See EEI Comments	
Likes 0	
Dislikes 0	
Response	
Kennedy Meier - Electric Reliability Council of Texas, Inc. - 2	
Answer	
Document Name	
Comment	
ERCOT joins the comments submitted by the IRC SRC and adopts them as its own.	
Likes 0	
Dislikes 0	
Response	

Lucinda Bradshaw - Lucinda Bradshaw On Behalf of: Byron Booker, Oncor Electric Delivery, 1; - Lucinda Bradshaw	
Answer	
Document Name	
Comment	
Not Applicable.	
Likes 0	
Dislikes 0	
Response	
Constantin Chitescu - Ontario Power Generation Inc. - 5	
Answer	
Document Name	
Comment	
OPG supports the following NPCC Regional Standards Committee's comments: "CIP-014-4 standard: 1. R2: add BES acronym to first instance of the use of Bulk Electric System and replace with BES throughout the rest of the standard. 2. When referring to "control center" throughout the standard, are we referring to the NERC Glossary term "Control Center"? If so, please consider capitalizing the term throughout the standard. 3. R5 High VSL: refers to Part 5.2 however the primary control center is identified in Part 5.3. Technical Rationale: 1. Replace references to CIP-002-5.1 for CIP-002-5.1a throughout the document. 2. Replace the reference to EOP-004-2 on page 18 with EOP-004-4. 3. The Technical Rationale for CIP-014 Requirement R3, Part 3.3.3 should include a statement that the use of three-phase faults at applicable stations constitutes an acceptable approach. The concern raised is that the requirement language "[a] documented justification for the Fault(s) associated with physical attack to be simulated" could be interpreted as requiring the Transmission Owner to perform an (in-depth/detailed) analysis of potential credible high-severity scenario for a physical attack even if a (generally worst-case) three-phase fault is the selected Fault type."	
Likes 0	
Dislikes 0	
Response	
Khang Le - Seminole Electric Cooperative, Inc. - 1	
Answer	
Document Name	

Comment
It’s Seminole’s understanding that NERC has instated an Abeyance Program for certain Reliability Standards. It’s unclear to Seminole that if a Standard is not identified in the abeyance program as to whether then it should be treated as a zero defect Standard, and therefore, Seminole requests that this Standard be entered formally into the NERC Abeyance Program. If not put into the NERC Abeyance Program, Seminole requests that the NERC Standard Drafting Team identify that this Standard should not be treated as a zero-defect Standard.

Likes 0	
Dislikes 0	

Response

Lori Frisk - Lori Frisk On Behalf of: Hillary Creurer, Allete - Minnesota Power, Inc., 1; - Lori Frisk	
Answer	
Document Name	

Comment
Minnesota Power supports the MRO NERC Standards Review Forum's (NSRF's) comments.

Likes 0	
Dislikes 0	

Response

Naresh Latchman - Georgia System Operations Corporation - 3	
Answer	
Document Name	

Comment
The primary issue with this standard as it is written, and as this draft continues is the application of requirements/expectations appropriate for the Transmission Planner/Planning Coordinator function to the Transmission Owner instead. Developing steady-state and dynamic simulation criteria is a planning function and should not be required of a Transmission Owner. The sub-requirements (of R3) go further into addressing what a transmission planning study should include but applies this requirement incorrectly to the Transmission owner. The intent of R3 is more appropriately applicable to the TPL body of standards. More appropriately, CIP-014 should reference output from a study performed in accordance with a clearly defined TPL requirement for an extreme event involving the loss of an applicable Transmission station(s) or substation(s). This reduces clarity on the types of studies to be performed to assess the extreme events identified in this standard. The revisions may follow the scope of the SAR but this fundamental flaw is still an issue. Regarding R6: With an attempt at clarifying study criteria, though they should be applied to the appropriate planning entity, there is no reason to maintain a requirement for an unaffiliated third party to perform a verification of a transmission planning analysis associated with the risk assessment. Instead of requiring planning entities be the third party verifier, they should just perform the study under clearly defined requirements in a TPL standard and communicate

this information to the Transmission Owner. It is also important to note the third party verifying the risk assessment for this physical security standard is not required to have expertise in that area according to this requirement. Additionally, the SDT should consider removing the Reliability Coordinator as a potential third party verifier as that function does not perform the type of analysis being sought in this standard.

Additional Comment:

The analysis outlined in the CIP-014 standard is an evaluation of an extreme event and is based on transmission planning analysis. It would seem NERC and the industry are potentially missing an opportunity to consolidate requirements around the evaluation of extreme events better than what is currently provided for in the current construct of the existing and planned Reliability Standards. Consideration should be given to provide a better pathway to house long-term planning requirements around extreme event analysis within the TPL standards (not CIP) and specify the reliability analyses needed, the parameters for determining reliability, expectations for corrective actions, and the communication path from planning to owners and others with a reliability-related need for this information. The planning assessment/CAP required by TPL-001 is already required to be distributed to applicable owners. Clarifying the extreme event expectations in TPL-001 (or other planning standard) to specify that evaluating the substation outage outlined in CIP-014 every 36 months is one pathway to better align standard requirements with the appropriate entity.

Likes 0	
Dislikes 0	

Response

Jodi Yeary - AEP - 3

Answer	
Document Name	

Comment

AEP recommends adding a Moderate VSL for R2 as follows (change indicated in ***bold***):

Moderate VSL: “The Transmission Owner with applicable Transmission station(s) or Transmission substation(s) identified in Requirement R1 ***failed to identify one*** existing Bulk Electric System Transmission station(s) and Bulk Electric System Transmission substation(s), irrespective of ownership, within 1500 feet or 457 meters (the shortest distance, measured substation fence line to substation fence line) of an applicable Transmission station or Transmission substation identified in Requirement R1.”

AEP also recommends adding clarification to the Severe VSL for R2 (change indicated in ***bold***):

Severe VSL: “The Transmission Owner with applicable Transmission station(s) or Transmission substation(s) identified in Requirement R1 ***failed to identify any*** existing Bulk Electric System Transmission station(s) and Bulk Electric System Transmission substation(s), irrespective of ownership, within 1500 feet or 457 meters (the shortest distance, measured substation fence line to substation fence line) of an applicable Transmission station or Transmission substation identified in Requirement R1.”

Finally, AEP recommends removing the phrase “any evidence for” from the Severe VSL for R4 to correct a typographical error. The revised language would read (remove **italisized*)*:

“…for more than 75% and less than or equal to 100% of ****any evidence for of**** jointly owned applicable Transmission station(s) and Transmission substation(s).”

Likes 0	
Dislikes 0	

Response

Ruida Shu - Northeast Power Coordinating Council - 10, Group Name NPCC RSC

Answer	
Document Name	

Comment

CIP-014-4 standard:

1. R2: add BES acronym to first instance of the use of Bulk Electric System and replace with BES throughout the rest of the standard.
2. When referring to “control center” throughout the standard, are we referring to the NERC Glossary term “Control Center”? If so, please consider capitalizing the term throughout the standard.
3. R5 High VSL: refers to Part 5.2 however the primary control center is identified in Part 5.3.

Technical Rationale:

1. Replace references to CIP-002-5.1 for CIP-002-5.1a throughout the document.
2. Replace the reference to EOP-004-2 on page 18 with EOP-004-4.
3. The Technical Rationale for CIP-014 Requirement R3, Part 3.3.3 should include a statement that the use of three-phase faults at applicable stations constitutes an acceptable approach. The concern raised is that the requirement language “[a] documented justification for the Fault(s) associated with physical attack to be simulated” could be interpreted as requiring the Transmission Owner to perform an (in-depth/detailed) analysis of potential credible high-severity scenario for a physical attack even if a (generally worst-case) three-phase fault is the selected Fault type.

Likes 0	
Dislikes 0	

Response

Nick Leathers - Nick Leathers On Behalf of: David Jendras Sr, Ameren - Ameren Services, 3, 6, 1; - Nick Leathers

Answer	
Document Name	

Comment

Please provide specificity around whether stations or substations with multiple BES buses of multiple voltages are considered one station/substation or one station/substation plus a proximate station/substation.

Likes 0	

Dislikes 0	

Response

Jodirah Green - ACES Power Marketing - 1,3,4,5,6 - MRO,WECC,Texas RE,SERC,RF, Group Name ACES Collaborators

Answer	
Document Name	

Comment

ACES would like to thank the DT for their hard work and allowing us to comment on this project.

Likes 0	
Dislikes 0	

Response

Kirsten Rowley - Midcontinent ISO, Inc. - 2, Group Name ISO/RTO Council (IRC) Standards Review Committee (SRC)

Answer	
Document Name	

Comment

The IRC SRC notes that Criterion 3 in Attachment 1 references Facilities identified by the Planning Coordinator as critical to the derivation of an Interconnection Reliability Operating Limit (IROL). However, under FAC-014-3, Planning Coordinators no longer develop IROLs. The SRC recommends that Criterion 3 be updated accordingly to remove the reference to the Planning Coordinator.

The IRC SRC also recommends a new SAR could be developed to remove Requirement R6 from the proposed CIP-014-4 standard. The new requirements proposed in CIP-014-4 Requirements R1-R5 outline necessary specifics for more meaningful risk assessments, which reduces the need for unaffiliated third-party verification, especially given that auditors are also directed to apply various methods to test the validity of station identifications under current CIP-014-3 Requirement R1.

Note: AESO, ISO-NE, and SPP abstain from these comments.

Likes 0	
Dislikes 0	

Response

Andrea Koch - Edison Electric Institute - NA - Not Applicable - NA - Not Applicable

Answer	
Document Name	
Comment	
N/A	
Likes 0	
Dislikes 0	
Response	
Dan Perry - TXNM Energy - 1,3,5 - WECC,Texas RE	
Answer	
Document Name	
Comment	
TXNM Energy recommends removal of “Planning Coordinator, or Transmission Planner” from item 3 in Attachment 1. Per FAC-014-3 R5.2.2 and R5.2.4 it is the RC that provide the transmission facilities that are critical to the derivation of the IROL and associated critical contingencies.	
Likes 0	
Dislikes 0	
Response	
Alan Kloster - Alan Kloster On Behalf of: Jeremy Harris, Evergy, 3, 5, 1, 6; Kevin Frick, Evergy, 3, 5, 1, 6; Marcus Moor, Evergy, 3, 5, 1, 6; Tiffany Lake, Evergy, 3, 5, 1, 6; - Alan Kloster	
Answer	
Document Name	
Comment	
Evergy supports and incorporates by reference the comments of the MRO NSRF for question #8.	
Likes 0	
Dislikes 0	
Response	
Joseph Gatten - Great River Energy - 3, Group Name Great River Energy	
Answer	

Document Name	
Comment	
GRE thanks the drafting team for their work and dedication.	
Likes 0	
Dislikes 0	
Response	
Matt Bullard - Dominion - Dominion Virginia Power - 3, Group Name Dominion Energy	
Answer	
Document Name	
Comment	
The draft standard appears to focus on unlikely scenarios and would require significant planning time to plan for and analyze them, with limited corresponding reliability benefit. It should instead place greater emphasis on practical resilience measures for applicable substations that address more realistic and emerging threats.	
Likes 0	
Dislikes 0	
Response	
Chantal Mazza - Chantal Mazza On Behalf of: Junji Yamaguchi, Hydro-Quebec (HQ), 1, 5; Nicolas Turcotte, Hydro-Quebec (HQ), 1, 5; - Chantal Mazza	
Answer	
Document Name	
Comment	
CIP-014-4 standard: 1. R2: add BES acronym to first instance of the use of Bulk Electric System and replace with BES throughout the rest of the standard. 2. When referring to “control center” throughout the standard, are we referring to the NERC Glossary term “Control Center”? If so, please consider capitalizing the term throughout the standard. 3. R5 High VSL: refers to Part 5.2 however the primary control center is identified in Part 5.3. Technical Rationale: 1. Replace references to CIP-002-5.1 for CIP-002-5.1a throughout the document. 2. Replace the reference to EOP-004-2 on page 18 with EOP-004-4. 3. The Technical Rationale for CIP-014 Requirement R3, Part 3.3.3 should include a statement that the use of three-phase faults at applicable stations constitutes an acceptable approach. The concern raised is that the requirement language “[a] documented justification for the Fault(s)	

associated with physical attack to be simulated" could be interpreted as requiring the Transmission Owner to perform an (in-depth/detailed) analysis of potential credible high-severity scenario for a physical attack even if a (generally worst-case) three-phase fault is the selected Fault type.	
Likes 0	
Dislikes 0	
Response	
Zahid Qayyum - New York Power Authority - 5	
Answer	
Document Name	
Comment	
NYPA Supports NPCC RSC TFIST Comments.	
Likes 0	
Dislikes 0	
Response	
Daniel Valle - New York Power Authority - 1	
Answer	
Document Name	
Comment	
NYPA supports the comments submitted by NPCC RSC.	
Likes 0	
Dislikes 0	
Response	
Katrina Lyons - Georgia System Operations Corporation - 4	
Answer	
Document Name	
Comment	
The primary issue with this standard as it is written, and as this draft continues is the application of requirements/expectations appropriate for the Transmission Planner/Planning Coordinator function to the Transmission Owner instead. Developing steady-state and dynamic simulation criteria is a planning function and should not be required of a Transmission Owner. The sub-requirements (of R3) go further into addressing what a transmission	

planning study should include but applies this requirement incorrectly to the Transmission owner. The intent of R3 is more appropriately applicable to the TPL body of standards. More appropriately, CIP-014 should reference output from a study performed in accordance with a clearly defined TPL requirement for an extreme event involving the loss of an applicable Transmission station(s) or substation(s).

This reduces clarity on the types of studies to be performed to assess the extreme events identified in this standard. The revisions may follow the scope of the SAR but this fundamental flaw is still an issue.

Regarding R6:

With an attempt at clarifying study criteria, though they should be applied to the appropriate planning entity, there is no reason to maintain a requirement for an unaffiliated third party to perform a verification of a transmission planning analysis associated with the risk assessment. Instead of requiring planning entities be the third party verifier, they should just perform the study under clearly defined requirements in a TPL standard and communicate this information to the Transmission Owner. It is also important to note the third party verifying the risk assessment for this physical security standard is not required to have expertise in that area according to this requirement. Additionally, the SDT should consider removing the Reliability Coordinator as a potential third party verifier as that function does not perform the type of analysis being sought in this standard.

Additional Comment:

The analysis outlined in the CIP-014 standard is an evaluation of an extreme event and is based on transmission planning analysis. It would seem NERC and the industry are potentially missing an opportunity to consolidate requirements around the evaluation of extreme events better than what is currently provided for in the current construct of the existing and planned Reliability Standards. Consideration should be given to provide a better pathway to house long-term planning requirements around extreme event analysis within the TPL standards (not CIP) and specify the reliability analyses needed, the parameters for determining reliability, expectations for corrective actions, and the communication path from planning to owners and others with a reliability-related need for this information. The planning assessment/CAP required by TPL-001 is already required to be distributed to applicable owners. Clarifying the extreme event expectations in TPL-001 (or other planning standard) to specify that evaluating the substation outage outlined in CIP-014 every 36 months is one pathway to better align standard requirements with the appropriate entity.

Likes 0	
Dislikes 0	

Response

Amy Casuscelli - Xcel Energy, Inc. - 1,3,5,6 - MRO,WECC

Answer	
Document Name	

Comment

Additional clarity regarding obligations for "proximate" facilities is needed. We suggest adding clarity that R8-R10 only applies to company facilities, not proximate facilties.

Likes 0	
Dislikes 0	

Response

Tamarra Hardie - Public Utility District No. 1 of Chelan County - 6, Group Name CHPD

Answer	
Document Name	
Comment	
N/A	
Likes 0	
Dislikes 0	
Response	
Sarah Miller - FirstEnergy - FirstEnergy Corporation - 4, Group Name FE Voters	
Answer	
Document Name	
Comment	
None	
Likes 0	
Dislikes 0	
Response	
Jeffrey Streifling - NB Power Corporation - 1	
Answer	
Document Name	
Comment	

CIP-014-4 standard:

1. R2: add BES acronym to first instance of the use of Bulk Electric System and replace with BES throughout the rest of the standard.
2. When referring to “control center” throughout the standard, are we referring to the NERC Glossary term “Control Center”? If so, please consider capitalizing the term throughout the standard.
3. R5 High VSL: refers to Part 5.2 however the primary control center is identified in Part 5.3.

Technical Rationale:

1. Replace references to CIP-002-5.1 for CIP-002-5.1a throughout the document.
2. Replace the reference to EOP-004-2 on page 18 with EOP-004-4.

Likes 0	
Dislikes 0	

Response

Stephen Stafford - Stephen Stafford On Behalf of: Greg Davis, Georgia Transmission Corporation, 1; - Stephen Stafford

Answer	
Document Name	

Comment

The primary issue with this standard as it is written, and as this draft continues is the application of requirements/expectations appropriate for the Transmission Planner/Planning Coordinator function to the Transmission Owner instead. Developing steady-state and dynamic simulation criteria is a planning function and should not be required of a Transmission Owner. The sub-requirements (of R3) go further into addressing what a transmission planning study should include but applies this requirement incorrectly to the Transmission owner. The intent of R3 is more appropriately applicable to the TPL body of standards. More appropriately, CIP-014 should reference output from a study performed in accordance with a clearly defined TPL requirement for an extreme event involving the loss of an applicable Transmission station(s) or substation(s).

This reduces clarity on the types of studies to be performed to assess the extreme events identified in this standard. The revisions may follow the scope of the SAR but this fundamental flaw is still an issue.

Regarding R6:

With an attempt at clarifying study criteria, though they should be applied to the appropriate planning entity, there is no reason to maintain a requirement for an unaffiliated third party to perform a verification of a transmission planning analysis associated with the risk assessment. Instead of requiring planning entities be the third party verifier, they should just perform the study under clearly defined requirements in a TPL standard and communicate this information to the Transmission Owner. It is also important to note the third party verifying the risk assessment for this physical security standard is not required to have expertise in that area according to this requirement. Additionally, the SDT should consider removing the Reliability Coordinator as a potential third party verifier as that function does not perform the type of analysis being sought in this standard.

Additional Comment:

The analysis outlined in the CIP-014 standard is an evaluation of an extreme event and is based on transmission planning analysis. It would seem NERC and the industry are potentially missing an opportunity to consolidate requirements around the evaluation of extreme events better than what is currently provided for in the current construct of the existing and planned Reliability Standards. Consideration should be given to provide a better pathway to house long-term planning requirements around extreme event analysis within the TPL standards (not CIP) and specify the reliability analyses needed, the parameters for determining reliability, expectations for corrective actions, and the communication path from planning to owners and others with a reliability-related need for this information. The planning assessment/CAP required by TPL-001 is already required to be distributed to applicable owners. Clarifying the extreme event expectations in TPL-001 (or other planning standard) to specify that evaluating the substation outage outlined in CIP-014 every 36 months is one pathway to better align standard requirements with the appropriate entity.

Likes 0	
Dislikes 0	

Response

Kelly Heims - Central Iowa Power Cooperative - 1	
Answer	
Document Name	
Comment	
Central Iowa Power Cooperative supports the MRO's NERC Standards Review Forum (NSRF) and ACES comments for Question 8.	
Likes 0	
Dislikes 0	
Response	
Anna Martinson - MRO - 1,2,3,4,5,6 - MRO, Group Name MRO Group	
Answer	
Document Name	2023-06-unofficial_comment_form_03312026 NSRF.docx
Comment	
Understanding that R6, formerly R2 under CIP-014-3, is out of scope for this SAR, MRO NSRF requests that the drafting team make a recommendation to the Standards Committee based on industry feedback that a SAR be drafted to remove R6 as an administrative burden. It should no longer be needed, given that this project has added the necessary specifics required for a meaningful risk assessment, diminishing the need for third-party verification. Also, there has been anecdotal experience as an industry that auditors have audited the (CIP-014-3) R1 risk assessments directly without relying on the R2 third-party verification as directed by the RSAW. If (CIP-014-4) R6 is to be retained, 90 calendar days for completing R6 in R6.2 is proving to be tight for some larger entities, which request extension to 180 calendar days (which would be much easier to calculate as six calendar months to avoid getting tripped up on 28/30/31-day months). The MRO NSRF requests that the requirement R10 for a third-party review of the physical security plan be considered for removal as part of the same SAR, this requirement similarly adds administrative burden without benefit to the BES.	
Likes 0	
Dislikes 0	
Response	
Alison Nickells - NiSource - Northern Indiana Public Service Co. - 1	
Answer	
Document Name	
Comment	
No comments.	
Likes 0	

Dislikes 0	
Response	
Matthew Nicklin - Southern Illinois Power Cooperative - 1,5 - SERC	
Answer	
Document Name	
Comment	
SIPC would like to thank the DT for their hard work and allowing us to comment on this project.	
Likes 0	
Dislikes 0	
Response	
Rebika Yitna - Rebika Yitna On Behalf of: Roger Brand, MEAG Power, 3, 1; - Rebika Yitna	
Answer	
Document Name	
Comment	
No additional comments	
Likes 0	
Dislikes 0	
Response	
Amy Wilke - American Transmission Company, LLC - 1	
Answer	
Document Name	
Comment	
ATC has no additional comments, and thanks the drafting team for the approach taken. ATC has more conservative methodologies for most requirements that go above and beyond these new obligations and accomplishes these additional requirements through the implementation of our standards.	
Likes 0	
Dislikes 0	

Response

Ken Bartz - MGE Energy - Madison Gas and Electric Co. - 3	
Answer	
Document Name	
Comment	
Madison Gas and Electric supports any responses and comments of the MRO NSRF and/or TAPS/Utility Services. MGE engages regularly with those trade partners as they formulate voting positions and comments.	
Likes 0	
Dislikes 0	

Response

Donna Wood - Tri-State G and T Association, Inc. - 1	
Answer	
Document Name	
Comment	
Tri-State has no additional comments.	
Likes 0	
Dislikes 0	

Response

Laura Brignola - Constellation - 6	
Answer	
Document Name	
Comment	
Not Applicable to Constellation.	
Likes 0	
Dislikes 0	

Response

Consideration of Comments

Project Name:	2023-06 CIP-014 Risk Assessment Refinement | Draft 4
Comment Period Start Date:	3/31/2026
Comment Period End Date:	5/14/2026
Associated Ballot(s):	Project 2023-06 CIP-014 Risk Assessment Refinement CIP-014-4 | Non-Binding Poll AB 4 NB Project 2023-06 CIP-014 Risk Assessment Refinement CIP-014-4 AB 4 ST Project 2023-06 CIP-014 Risk Assessment Refinement Implementation Plan AB 4 OT

There were 69 sets of responses, including comments from approximately 150 different people from approximately 95 companies representing 8 of the Industry Segments as shown in the table on the following pages.

All comments submitted can be reviewed in their original format on the project page.

If you feel that your comment has been overlooked, let us know immediately. Our goal is to give every comment serious consideration in this process. If you feel there has been an error or omission, contact Manager of Standards Information, Nasheema Santos (via email) or at (404) 290-6796.

Questions

1. Do you agree with the modifications made in CIP-014-4 with modified Requirement R1 to address the issues identified in the standard authorization request (SAR)? If you do not agree, please provide your recommendation and, if appropriate, technical or procedural justification.

2. Do you agree with the modifications made in CIP-014-4 with new Requirement R2 to address the issues identified in the SAR? If you do not agree, please provide your recommendation and, if appropriate, technical or procedural justification.

3. Do you agree with the modifications made in CIP-014-4 with new Requirement R3 to address the issues identified in the SAR? If you do not agree, please provide your recommendation and, if appropriate, technical or procedural justification.

4. Do you agree with the modifications made in CIP-014-4 with new Requirement R4 to address the issues identified in the SAR? If you do not agree, please provide your recommendation and, if appropriate, technical or procedural justification.

5. Do you agree with the modifications made in CIP-014-4 with adding Requirement R5 to address the issues identified in the SAR? If you do not agree, please provide your recommendation and, if appropriate, technical or procedural justification.

6. Do you agree with the Implementation Plan for CIP-014-4? If you think an alternate timeframe is needed, please propose an alternate implementation plan with a detailed explanation.

7. Do you believe there are alternatives or more cost-effective options to address the recommendations in CIP-014-4 to address the reliability issue of physical security? If so, please provide your recommendation and, if appropriate, technical, or procedural justification.

8. Provide any additional comments for the drafting team to consider, if desired.

The Industry Segments are:

1 — Transmission Owners
2 — RTOs, ISOs
3 — Load-serving Entities
4 — Transmission-dependent Utilities
5 — Electric Generators
6 — Electricity Brokers, Aggregators, and Marketers
7 — Large Electricity End Users
8 — Small Electricity End Users
9 — Federal, State, Provincial Regulatory or other Government Entities
10 — Regional Reliability Organizations, Regional Entities

Organization Name	Name	Segment(s)	Region	Group Name	Group Member Name	Group Member Organization	Group Member Segment(s)	Group Member Region
MRO	Anna Martinson	1,2,3,4,5,6	MRO	MRO Group	Shonda Markus	Omaha Public Power District (OPPD)	1,3,5,6	MRO
					Jamison Cawley	Nebraska Public Power District	1,3,5	MRO
					Jay Sethi	Manitoba Hydro (MH)	1,3,5,6	MRO
					George Brown	Pattern Operators LP	5	MRO
					Seth Shoemaker	Muscatine Power & Water	1,3,5,6	MRO
					Angela Wheat	Southwestern Power Administration	1	MRO
					Joshua Phillips	Southwest Power Pool	2	MRO
					Patrick Tuttle	Oklahoma Municipal Power Authority	4,5	MRO
					Hayden Maples	Evergy	1,3,5,6	MRO
					Kirsten Rowley	MISO	2	MRO
					Andrew Coffelt	Kansas City Board of Public Utilities	1,3,5,6	MRO
					Rockeish Mckenzie	Invenergy	5,6	MRO
					Shawna Satterwhite	Oklahoma Gas and Electric	1,3,5,6	MRO

					Husam Al-Hadidi	Manitoba Hydro	1,3,5,6	MRO
Exelon	Daniel Gacek	1		Exelon	Daniel Gacek	Exelon	1	RF
					Kinte Whitehead	Exelon	3	RF
ACES Power Marketing	Jodirah Green	1,3,4,5,6	MRO,NPCC,RF,SERC,Texas RE,WECC	ACES Collaborators	James Shultz	Hoosier Energy Electric Cooperative	1	RF
					Jason Procuniar	Buckeye Power, Inc.	4	RF
					Kylee Kropp	Sunflower Electric Power Corporation	1	MRO
					Kelly Heims	Central Iowa Power Cooperative	1	MRO
Great River Energy	Joseph Gatten	3		Great River Energy	Joseph Gatten	Great River Energy	1	MRO
					Joseph Gatten	Great River Energy	3	MRO
					Joseph Gatten	Great River Energy	5	MRO
					Joseph Gatten	Great River Energy	6	MRO
Eversource Energy	Joshua London	1		Eversource	Joshua London	Eversource Energy	1	NPCC
					Vicki O'Leary	Eversource Energy	3	NPCC
Midcontinent ISO, Inc.	Kirsten Rowley	2		ISO/RTO Council (IRC) Standards Review	Elizabeth Davis	PJM	2	RF
					Kirsten Rowley	Midcontinent ISO, Inc.	2	RF

				Committee (SRC)	John Pearson	ISO-NE	2	NPCC
					Gregory Campoli	New York Independent System Operator	2	NPCC
					Joshua Phillips	Southwest Power Pool, Inc. (RTO)	2	MRO
					Kennedy Meier	ERCOT	2	Texas RE
					Jamie Johnson	California ISO	2	WECC
					Kathryn Kuber	Alberta Electric System Operator	2	NPCC
Dominion - Dominion Virginia Power	Matt Bullard	3		Dominion Energy	Matt Bullard	Dominion Energy	3	SERC
					Barbara Marion	Dominion Energy	5	SERC
					Alex Bekashoff	Dominion Energy	6	SERC
					Steven Belle	Dominion Energy	1	SERC
Black Hills Corporation	Rachel Schuldt	6		Black Hills Corporation - All Segments	Trevor Rombough	Black Hills Corporation	1	WECC
					Josh Combs	Black Hills Corporation	3	WECC
					Rachel Schuldt	Black Hills Corporation	6	WECC
					Carly Miller	Black Hills Corporation	5	WECC
					Sheila Suurmeier	Black Hills Corporation	5	WECC
Northeast Power Coordinating Council	Ruida Shu	10	NPCC	NPCC RSC	Gerry Dunbar	Northeast Power Coordinating Council	10	NPCC
					Deidre Altobell	Con Edison	1	NPCC

Michele Tondalo	United Illuminating Co.	1	NPCC
Stephanie Ullah-Mazzuca	Orange and Rockland	1	NPCC
Michael Ridolfino	Central Hudson Gas & Electric Corp.	1	NPCC
Randy Buswell	Vermont Electric Power Company	1	NPCC
James Grant	NYISO	2	NPCC
Dermot Smyth	Con Ed - Consolidated Edison Co. of New York	1	NPCC
David Burke	Orange and Rockland	3	NPCC
Salvatore Spagnolo	New York Power Authority	1	NPCC
Sean Bodkin	Dominion - Dominion Resources, Inc.	6	NPCC
Silvia Mitchell	NextEra Energy - Florida Power and Light Co.	1	NPCC
Sean Cavote	PSEG	4	NPCC
Jason Chandler	Con Edison	5	NPCC
Shivaz Chopra	New York Power Authority	6	NPCC
Vijay Puran	New York State Department of Public Service	6	NPCC
David Kiguel	Independent	7	NPCC

Joel Charlebois	AESI	7	NPCC
Joshua London	Eversource Energy	1	NPCC
Joel Charlebois	AESI	7	NPCC
John Hastings	National Grid	1	NPCC
Erin Wilson	NB Power	1	NPCC
James Grant	NYISO	2	NPCC
Michael Couchesne	ISO-NE	2	NPCC
Kurtis Chong	IESO	2	NPCC
Michele Pagano	Con Edison	4	NPCC
Bendong Sun	Bruce Power	4	NPCC
Carvers Powers	Utility Services	5	NPCC
Wes Yeomans	NYSRC	7	NPCC
Emma Halilovic	Hydro One	1,3	NPCC
Philip Nichols	National Grid	1	NPCC
Emma Halilovic	Hydro One	1,3	NPCC
Caver Powers	Utility Services	5	NPCC

FirstEnergy - FirstEnergy Corporation	Sarah Miller	4		FE Voters	Theresa Ciancio	FirstEnergy - FirstEnergy Corporation	1	RF
					Aaron Ghodooshim	FirstEnergy - FirstEnergy Corporation	3	RF
					Matthew Augustin	FirstEnergy - FirstEnergy Corporation	5	RF
					Stacey Sheehan	FirstEnergy - FirstEnergy Corporation	6	RF
Public Utility District No. 1 of Chelan County	Tamarra Hardie	6		CHPD	Joyce Gundry	Public Utility District No. 1 of Chelan County	3	WECC
					Rebecca Zahler	Public Utility District No. 1 of Chelan County	5	WECC
					Maggie Bravo	Public Utility District No. 1 of Chelan County	1	WECC

1. Do you agree with the modifications made in CIP-014-4 with modified Requirement R1 to address the issues identified in the standard authorization request (SAR)? If you do not agree, please provide your recommendation and, if appropriate, technical or procedural justification.
Alyssia Rhoads - Public Utility District No. 1 of Snohomish County - 1

Answer	No
Document Name	

Comment

SNPD strongly disagrees with the adoption of a 36-month assessment interval for utilities that have not previously identified any applicable Transmission stations or substations. Reducing the assessment frequency from 60 months to 36 months would increase the study burden and associated costs for these entities, without providing any demonstrated benefit to the reliability of the Bulk Electric System (BES).

SNPD instead proposes retaining the existing 60-month assessment requirement for entities that have not identified applicable assets. This requirement should continue to include Transmission stations and substations that are planned to be placed in service within the next 60 calendar months.

Likes 0	
Dislikes 0	

Response

Thank you for your comments. A directive of the SAR was to “correct any discrepancies between the study period, frequency of study, and the base case(s) a Transmission Owner uses.” The Drafting Team chose a timeframe that balanced the directive of the SAR and the comments from industry to make the timeframe either shorter or longer than 36 months.

Jeffrey Streifling - NB Power Corporation - 1

Answer	No

Document Name	
Comment	
NPCC RSC suggest adding the 3rd paragraph of the technical rationale to R1. “TOs shall review and, if necessary, update the list of applicable Transmission station(s) or Transmission substation(s) per Attachment 1 at least once every 36 calendar months. The list of applicable Transmission station(s) or Transmission substation(s) shall include existing Facilities and Transmission station(s) and Transmission substation(s) planned to be in service within 36 calendar months. The 36 calendar months risk assessment study cycle aligns with the 36 calendar months planned-to-be-in-service date. "Planned to be in-service" should be taken to mean all Transmission station(s) and Transmission substation(s) as modeled in the base cases for the Near-Term Transmission Planning Horizon”. The draft references facilities “planned to be in service within 36 months,” but does not describe the basis for making that determination. The Technical Rationale ties this concept to facilities included in Near-Term Transmission Planning base cases; however, this connection is not reflected in the standard language. Incorporating this clarification directly into the standard could enhance clarity and promote consistent application of the requirement.	
Likes 0	
Dislikes 0	
Response	
Thank you for your comments. The Drafting Team believes Requirement R1 clearly establishes the obligation to identify existing Transmission stations and Transmission substations, as well as those planned to be in service within 36 calendar months. Technical Rationale provides supporting explanation regarding the 36-calendar-month alignment and the use of planning information to support consistent implementation. The Drafting Team believes this clarification is appropriately addressed in the Technical Rationale and has determined that additional revisions to Requirement R1 are not needed.	
Zahid Qayyum - New York Power Authority - 5	
Answer	No
Document Name	

Comment	
NYPA Supports NPCC RSC TFIST Comments.	
Likes 0	
Dislikes 0	
Response	
Thank you for your comments. Please see the response to the NPCC RSC comments.	
Daniel Valle - New York Power Authority - 1	
Answer	No
Document Name	
Comment	
NYPA supports the comments submitted by NPCC RSC.	
Likes 0	
Dislikes 0	
Response	
Thank you for your comments. Please see the response to the NPCC RSC comments.	
Isidoro Behar - Long Island Power Authority - 1	
Answer	No
Document Name	
Comment	

Question for the SDT: Considering the Measure 1 verbiage (“evidence may include, but are not limited to, dated written or electronic documentation of the Transmission station(s) and Transmission substation(s) (existing and those planned to be in service within 36 calendar months) that meet any of the criteria in Attachment 1.”), what action is needed to demonstrate compliance with respect to “identifying” applicable stations, and what notification(s) is needed? Our observation is that the Req #1 verbiage and the Measure 1 verbiage do not align.

Additionally, we observe that the term “applicable” station is introduced in Req# 1 and is used throughout the standard. The term “proximate” station is introduced in Req #2 and is referred to in Reqs 3.3 and 5. Based on this revision to the standard, these are two distinct sets of stations (applicable and proximate). We observe that for a few requirements / sub-requirements, there may be a possible gap or point of confusion as to whether a proximate station needs to meet the requirement / sub-requirement.

As a general comment, we recommend that the specific use of both of these terms be reviewed in fine detail to ensure that there will be no confusion as to whether a requirement pertains to an applicable station, a proximate station, or to both.

The draft references facilities “planned to be in service within 36 months,” but does not describe the basis for making that determination. The Technical Rationale ties this concept to facilities included in Near-Term Transmission Planning base cases; however, this connection is not reflected in the standard language. Incorporating this clarification directly into the standard could enhance clarity and promote consistent application of the requirement.

Likes 0	
Dislikes 0	

Response

Thank you for your comment. The drafting team looked the measure over and believes that the verbiage is clear.

From the SAR work scopes (Revise the risk assessment and clarify how to account for adjacent Transmission stations or Transmission substations of differing ownership as well as for those Transmission stations or Transmission substations within line-of-sight to each other.), neighboring BES stations must be considered. Requirement R3, Parts R3.3.2 and R3.4, as well as Requirement R5 spelled out what exactly applicable entities should do for proximate stations. The drafting team made some modifications in Requirement R2 to clear some confusion.

The Drafting Team believes Requirement R1 clearly establishes the obligation to identify existing Transmission stations and Transmission substations, as well as those planned to be in service within 36 calendar months. Technical Rationale provides supporting explanation regarding the 36-calendar-month alignment and the use of planning information to support consistent implementation. The Drafting Team believes this clarification is appropriately addressed in the Technical Rationale and has determined that additional revisions to Requirement R1 are not needed.	
Chantal Mazza - Chantal Mazza On Behalf of: Junji Yamaguchi, Hydro-Quebec (HQ), 1, 5; Nicolas Turcotte, Hydro-Quebec (HQ), 1, 5; - Chantal Mazza	
Answer	No
Document Name	
Comment	

Hydro-Québec supports the following NPCC RSC comments:

1. NPCC RSC suggest adding the 3rd paragraph of the technical rationale to R1. “TOs shall review and, if necessary, update the list of applicable Transmission station(s) or Transmission substation(s) per Attachment 1 at least once every 36 calendar months. The list of applicable Transmission station(s) or Transmission substation(s) shall include existing Facilities and Transmission station(s) and Transmission substation(s) planned to be in service within 36 calendar months. The 36 calendar months risk assessment study cycle aligns with the 36 calendar months planned-to-be-in-service date. "Planned to be in-service" should be taken to mean all Transmission station(s) and Transmission substation(s) as modeled in the base cases for the Near-Term Transmission Planning Horizon”.

The draft references facilities “planned to be in service within 36 months,” but does not describe the basis for making that determination. The Technical Rationale ties this concept to facilities included in Near-Term Transmission Planning base cases; however, this connection is not reflected in the standard language. Incorporating this clarification directly into the standard could enhance clarity and promote consistent application of the requirement.

2.

Requirement R1: “Each Transmission Owner, at least once every 36 calendar months, shall …”

Requirement R5: “At least once every 36 calendar months, each Transmission Owner shall …” Suggest re-wording the beginning of Requirement R1 to align with the structure in R5.	
Likes 0	
Dislikes 0	
Response	
1. Thank you for your comments. The Drafting Team believes Requirement R1 clearly establishes the obligation to identify existing Transmission stations and Transmission substations, as well as those planned to be in service within 36 calendar months. The Technical Rationale provides supporting explanation regarding the 36-calendar-month alignment and the use of planning information to support consistent implementation. The Drafting Team believes this clarification is appropriately addressed in the Technical Rationale and has determined that additional revisions to Requirement R1 are not needed. 2. The Drafting Team notes the suggested wording alignment between Requirement R1 and Requirement R5 does not change the obligation, timing, or implementation of R1 or R5. The Drafting team will review the wording for consistency.	
Matt Bullard - Dominion - Dominion Virginia Power - 3, Group Name Dominion Energy	
Answer	No
Document Name	
Comment	
Determining what will be coming online in 36 months in the future may not be reasonably considered to be accurate. DE recommends 24 months.	
Likes 0	
Dislikes 0	

Response
Thank you for your comments. The SAR scope is to “correct any discrepancies between the study period, frequency of study, and the base case{s} a Transmission Owner uses.” The Drafting Team chose a timeframe that balanced the scope of the SAR and the comments from industry to make the timeframe either shorter or longer than 36 months.

Ruida Shu - Northeast Power Coordinating Council - 10, Group Name NPCC RSC	
Answer	No
Document Name	
Comment	
NPCC RSC suggest adding the 3rd paragraph of the technical rationale to R1. “TOs shall review and, if necessary, update the list of applicable Transmission station(s) or Transmission substation(s) per Attachment 1 at least once every 36 calendar months. The list of applicable Transmission station(s) or Transmission substation(s) shall include existing Facilities and Transmission station(s) and Transmission substation(s) planned to be in service within 36 calendar months. The 36 calendar months risk assessment study cycle aligns with the 36 calendar months planned-to-be-in-service date. "Planned to be in-service" should be taken to mean all Transmission station(s) and Transmission substation(s) as modeled in the base cases for the Near-Term Transmission Planning Horizon”. The draft references facilities “planned to be in service within 36 months,” but does not describe the basis for making that determination. The Technical Rationale ties this concept to facilities included in Near-Term Transmission Planning base cases; however, this connection is not reflected in the standard language. Incorporating this clarification directly into the standard could enhance clarity and promote consistent application of the requirement. Requirement R1: “Each Transmission Owner, at least once every 36 calendar months, shall …” Requirement R5: “At least once every 36 calendar months, each Transmission Owner shall …”	

Suggest re-wording the beginning of Requirement R1 to align with the structure in R5.	
Likes 0	
Dislikes 0	
Response	
1. Thank you for your comments. The Drafting Team believes Requirement R1 clearly establishes the obligation to identify existing Transmission stations and Transmission substations, as well as those planned to be in service within 36 calendar months. The Technical Rationale provides supporting explanation regarding the 36-calendar-month alignment and the use of planning information to support consistent implementation. The Drafting Team believes this clarification is appropriately addressed in the Technical Rationale and has determined that additional revisions to Requirement R1 are not needed. 2. The Drafting Team notes the suggested wording alignment between Requirement R1 and Requirement R5 does not change the obligation, timing, or implementation of R1 or R5. The Drafting team will review the wording for consistency.	
Constantin Chitescu - Ontario Power Generation Inc. - 5	
Answer	No
Document Name	
Comment	
OPG supports the following NPCC Regional Standards Committee's comments: "NPCC RSC suggest adding the 3rd paragraph of the technical rationale to R1. "TOs shall review and, if necessary, update the list of applicable Transmission station(s) or Transmission substation(s) per Attachment 1 at least once every 36 calendar months. The list of applicable Transmission station(s) or Transmission substation(s) shall include existing Facilities and Transmission station(s) and Transmission substation(s) planned to be in service within 36 calendar months. The 36 calendar months risk assessment study cycle aligns with the 36 calendar months planned-to-be-in-service date. "Planned to be in-service" should be taken to mean all Transmission station(s) and Transmission substation(s) as modeled in the base cases for the Near-Term Transmission Planning Horizon". The draft references facilities "planned to be in service within 36 months," but does not describe the basis for making that determination.	

The Technical Rationale ties this concept to facilities included in Near-Term Transmission Planning base cases; however, this connection is not reflected in the standard language. Incorporating this clarification directly into the standard could enhance clarity and promote consistent application of the requirement. Requirement R1: “Each Transmission Owner, at least once every 36 calendar months, shall …” Requirement R5: “At least once every 36 calendar months, each Transmission Owner shall …” Suggest re-wording the beginning of Requirement R1 to align with the structure in R5."	
Likes 0	
Dislikes 0	
Response	
1. Thank you for your comments. The Drafting Team believes Requirement R1 clearly establishes the obligation to identify existing Transmission stations and Transmission substations, as well as those planned to be in service within 36 calendar months. The Technical Rationale provides supporting explanation regarding the 36-calendar-month alignment and the use of planning information to support consistent implementation. The Drafting Team believes this clarification is appropriately addressed in the Technical Rationale and has determined that additional revisions to Requirement R1 are not needed. 2. The Drafting Team notes the suggested wording alignment between Requirement R1 and Requirement R5 does not change the obligation, timing, or implementation of R1 or R5. The Drafting team will review the wording for consistency.	
Misty Carneal - Duke Energy - 1,3,5,6 - SERC,RF	
Answer	Yes
Document Name	
Comment	
Duke Energy supports the modifications.	
Likes 0	

Dislikes 0	
Response	
Thank you for your support.	
Ronald Hoover - Bonneville Power Administration - 1,3,5,6 - WECC	
Answer	Yes
Document Name	
Comment	
BPA agrees with the modifications made for R1. A three-year calendar cycle is easier to follow. However, the new requirement could pose challenges for entities that have not previously identified critical substations, as it reduces the assessment period from 60 to 36 months.	
Likes 0	
Dislikes 0	
Response	
Thank you for your comments. A directive of the SAR was to “correct any discrepancies between the study period, frequency of study, and the base case(s) a Transmission Owner uses.” The Drafting Team chose a timeframe that balanced the directive of the SAR and the comments from industry to make the timeframe either shorter or longer than 36 months.	
Kelly Heims - Central Iowa Power Cooperative - 1	
Answer	Yes
Document Name	
Comment	
Central Iowa Power Cooperative supports the MRO's NERC Standards Review Forum (NSRF) and ACES comments for Question 1.	

Likes 0	
Dislikes 0	
Response	
Thank you for your comments. Please see the responses to the MRO NSRF and ACES comments.	
Amy Casuscelli - Xcel Energy, Inc. - 1,3,5,6 - MRO,WECC	
Answer	Yes
Document Name	
Comment	
Xcel Energy supports EEI comments.	
Likes 1	Xcel Energy, Inc. , 6, Detmer Nicholas
Dislikes 0	
Response	
Thank you for your comments. Please see the response to EEI comments.	
Rachel Schuldt - Black Hills Corporation - 6, Group Name Black Hills Corporation - All Segments	
Answer	Yes
Document Name	
Comment	
Black Hills Corporation agrees with the modifications for Requirement R1.	

Likes 0	
Dislikes 0	
Response	
Thank you for your support.	
Joseph Gatten - Great River Energy - 3, Group Name Great River Energy	
Answer	Yes
Document Name	
Comment	
No additional comment.	
Likes 0	
Dislikes 0	
Response	
Thank you for your feedback.	
Alan Kloster - Alan Kloster On Behalf of: Jeremy Harris, Evergy, 3, 5, 1, 6; Kevin Frick, Evergy, 3, 5, 1, 6; Marcus Moor, Evergy, 3, 5, 1, 6; Tiffany Lake, Evergy, 3, 5, 1, 6; - Alan Kloster	
Answer	Yes
Document Name	
Comment	
Evergy supports and incorporates by reference the comments of the Edison Electric Institute (EEI) for question #1.	

Likes 0	
Dislikes 0	
Response	
Thank you for your comments. Please see the response to EEI comments.	
Dan Perry - TXNM Energy - 1,3,5 - WECC,Texas RE	
Answer	Yes
Document Name	
Comment	
TXNM Energy agrees with EEI submitted comments repeated below. EEI agrees with the modifications for Requirement R1. In the Technical Rationale for Requirement R1, EEI proposes omitting the strikethrough portion below since the Near-Term Transmission Planning Horizon (Year One through five) is greater than the 36 months prescribed in the standard. "Planned to be in-service" should be taken to mean all Transmission station(s) and Transmission substation(s) as modeled in the base cases **for the Near-Term Transmission Planning Horizon.**	
Likes 0	
Dislikes 0	
Response	
Thank you for your comments. Please see the response to EEI comments.	
Andrea Koch - Edison Electric Institute - NA - Not Applicable - NA - Not Applicable	
Answer	Yes

Document Name	
Comment	
EEI agrees with the modifications for Requirement R1. In the Technical Rationale for Requirement R1, EEI proposes omitting the strikethrough portion below since the Near-Term Transmission Planning Horizon (Year One through five) is greater than the 36 months prescribed in the standard. "Planned to be in-service" should be taken to mean all Transmission station(s) and Transmission substation(s) as modeled in the base cases.	
Likes 0	
Dislikes 0	
Response	
Thank you for your comments. The drafting team strook through the Near-Term Transmission Planning Horizon.	
Timothy Singh - Timothy Singh On Behalf of: Israel Perez, Salt River Project, 6, 3, 5, 1; Jennifer Bennett, Salt River Project, 6, 3, 5, 1; Laura Somak, Salt River Project, 6, 3, 5, 1; Matthew Jaramilla, Salt River Project, 6, 3, 5, 1; - Timothy Singh	
Answer	Yes
Document Name	
Comment	
SRP agrees with R1 and the 36-month timeline but would need clarification on any planned station or substation not included in our latest analysis. A trigger-based element that has utilities create a reduced or trimmed-down analysis for compliance purposes for that specific site could be incorporated into the standard.	
Likes 0	
Dislikes 0	

Response	
Thank you for your comments and support. Transmission Owners are expected to use the best available information at the time of the assessment. The Drafting Team does not believe a separate trigger-based requirement is necessary.	
Clay Walker - Clay Walker On Behalf of: Robert Hirchak, Cleco Corporation, 6, 5, 1, 3; - Clay Walker	
Answer	Yes
Document Name	
Comment	
Cleco agrees with EEI comments.	
Likes 0	
Dislikes 0	
Response	
Thank you for your comments. Please see the response to EEI comments.	
Nick Leathers - Nick Leathers On Behalf of: David Jendras Sr, Ameren - Ameren Services, 3, 6, 1; - Nick Leathers	
Answer	Yes
Document Name	
Comment	
Ameren believes that the requirements for the R1 study should be very prescriptive. The requirements are still up for interpretation, and different auditors may have different interpretations.	
Likes 0	
Dislikes 0	

Response	
Thank you for your comments. The Drafting Team believes Requirement R1, together with Attachment 1 and the Technical Rationale, provides sufficient clarity. The Drafting Team has determined that additional prescriptive language is not necessary.	
Hayk Zargaryan - Edison International - Southern California Edison Company - 1	
Answer	Yes
Document Name	
Comment	
See comments submitted by Edison Electric Institute.	
Likes 0	
Dislikes 0	
Response	
Thank you for your comments. Please see the response to EEI comments.	
Todd Garwick - Edison International - Southern California Edison Company - 3	
Answer	Yes
Document Name	
Comment	
See comments submitted by Edison Electric Institute	
Likes 0	
Dislikes 0	

Response	
Thank you for your comments. Please see the response to EEI comments.	
Lori Frisk - Lori Frisk On Behalf of: Hillary Creurer, Allete - Minnesota Power, Inc., 1; - Lori Frisk	
Answer	Yes
Document Name	
Comment	
Minesota Power supports EEI's comments	
Likes 0	
Dislikes 0	
Response	
Thank you for your comments. Please see the response to EEI comments.	
Daniel Gacek - Exelon - 1, Group Name Exelon	
Answer	Yes
Document Name	
Comment	
Exelon agrees with the modifications to Requirement R1. Exelon also supports the EEI suggested edit to the Technical Rationale as stated below: EEI agrees with the modifications for Requirement R1.	

In the Technical Rationale for Requirement R1, EEI proposes omitting "**for the Near-Term Transmission Planning Horizon"** from the sentence below since the Near-Term Transmission Planning Horizon (Year One through five) is greater than the 36 months prescribed in the standard. "Planned to be in-service" should be taken to mean all Transmission station(s) and Transmission substation(s) as modeled in the base cases."	
Likes 0	
Dislikes 0	
Response	
Thank you for your comments. Please see the response to EEI comments.	
Stephanie Kenny - Edison International - Southern California Edison Company - 6	
Answer	Yes
Document Name	
Comment	
See EEI Comments	
Likes 0	
Dislikes 0	
Response	
Thank you for your comments. Please see the response to EEI comments.	
Dwanique Spiller - Berkshire Hathaway - NV Energy - 5	
Answer	Yes
Document Name	
Comment	

Likes 0	
Dislikes 0	
Response	
Thank you for your support.	
Donna Wood - Tri-State G and T Association, Inc. - 1	
Answer	Yes
Document Name	
Comment	
Likes 0	
Dislikes 0	
Response	
Thank you for your support.	
Jessica Cordero - Unisource - Tucson Electric Power Co. - 1	
Answer	Yes
Document Name	
Comment	
Likes 0	
Dislikes 0	
Response	
Thank you for your support.	

Amy Wilke - American Transmission Company, LLC - 1	
Answer	Yes
Document Name	
Comment	
Likes 0	
Dislikes 0	
Response	
Thank you for your support.	
Kevin Conway - Western Power Pool - 4	
Answer	Yes
Document Name	
Comment	
Likes 0	
Dislikes 0	
Response	
Thank you for your support.	
Tremayne Brown - ReliabilityFirst - 10	
Answer	Yes
Document Name	
Comment	

Likes 0	
Dislikes 0	
Response	
Thank you for your support.	
Rebika Yitna - Rebika Yitna On Behalf of: Roger Brand, MEAG Power, 3, 1; - Rebika Yitna	
Answer	Yes
Document Name	
Comment	
Likes 0	
Dislikes 0	
Response	
Thank you for your support.	
Matthew Nicklin - Southern Illinois Power Cooperative - 1,5 - SERC	
Answer	Yes
Document Name	
Comment	
Likes 0	
Dislikes 0	
Response	
Thank you for your support.	
Wendy Kalidass - U.S. Bureau of Reclamation - 5	

Answer	Yes
Document Name	
Comment	
Likes 0	
Dislikes 0	
Response	
Thank you for your support.	
Alison Nickells - NiSource - Northern Indiana Public Service Co. - 1	
Answer	Yes
Document Name	
Comment	
Likes 0	
Dislikes 0	
Response	
Thank you for your support.	
Karen Artola - CPS Energy - 1,3,5 - Texas RE	
Answer	Yes
Document Name	
Comment	
Likes 0	

Dislikes 0	
Response	
Thank you for your support.	
Anna Martinson - MRO - 1,2,3,4,5,6 - MRO, Group Name MRO Group	
Answer	Yes
Document Name	
Comment	
Likes 0	
Dislikes 0	
Response	
Thank you for your support.	
Stephen Stafford - Stephen Stafford On Behalf of: Greg Davis, Georgia Transmission Corporation, 1; - Stephen Stafford	
Answer	Yes
Document Name	
Comment	
Likes 0	
Dislikes 0	
Response	
Thank you for your support.	
Tasha Ward - Midwest Reliability Organization - 10	
Answer	Yes

Document Name	
Comment	
Likes 0	
Dislikes 0	
Response	
Thank you for your support.	
Bob Cardle - Bob Cardle On Behalf of: Marco Rios, Pacific Gas and Electric Company, 3, 1, 5; Sandra Ellis, Pacific Gas and Electric Company, 3, 1, 5; Tyler Brun, Pacific Gas and Electric Company, 3, 1, 5; - Bob Cardle	
Answer	Yes
Document Name	
Comment	
Likes 0	
Dislikes 0	
Response	
Thank you for your support.	
Sarah Miller - FirstEnergy - FirstEnergy Corporation - 4, Group Name FE Voters	
Answer	Yes
Document Name	
Comment	
Likes 0	

Dislikes 0	
Response	
Thank you for your support.	
Tamarra Hardie - Public Utility District No. 1 of Chelan County - 6, Group Name CHPD	
Answer	Yes
Document Name	
Comment	
Likes 0	
Dislikes 0	
Response	
Thank you for your support.	
Jennifer Wright - Sempra - San Diego Gas and Electric - 5	
Answer	Yes
Document Name	
Comment	
Likes 0	
Dislikes 0	
Response	
Thank you for your support.	
Katrina Lyons - Georgia System Operations Corporation - 4	
Answer	Yes

Document Name	
Comment	
Likes 0	
Dislikes 0	
Response	
Thank you for your support.	
TRACEY JOHNSON - Southern Indiana Gas and Electric Co. - 3,5,6 - RF	
Answer	Yes
Document Name	
Comment	
Likes 0	
Dislikes 0	
Response	
Thank you for your support.	
Joshua London - Eversource Energy - 1, Group Name Eversource	
Answer	Yes
Document Name	
Comment	
Likes 0	
Dislikes 0	

Response	
Thank you for your support.	
Randy Peters - Manitoba Hydro - 1,3,5,6 - MRO	
Answer	Yes
Document Name	
Comment	
Likes 0	
Dislikes 0	
Response	
Thank you for your support.	
Thomas Brinckman - CenterPoint Energy Houston Electric, LLC - 1 - Texas RE	
Answer	Yes
Document Name	
Comment	
Likes 0	
Dislikes 0	
Response	
Thank you for your support.	
Oshara Narangoda - Oshara Narangoda On Behalf of: Aditya Menon, Hydro One Networks, Inc., 1; - Oshara Narangoda	
Answer	Yes
Document Name	

Comment	
Likes 0	
Dislikes 0	
Response	
Thank you for your support.	
Said Sidiqi - Tennessee Valley Authority - 1,3,5,6 - SERC	
Answer	Yes
Document Name	
Comment	
Likes 0	
Dislikes 0	
Response	
Thank you for your support.	
Nathan Browder - Nathan Browder On Behalf of: Matt Lewis, Lower Colorado River Authority, 1, 5; - Nathan Browder	
Answer	Yes
Document Name	
Comment	
Likes 0	
Dislikes 0	
Response	

Thank you for your support.	
Carver Powers - Utility Services, Inc. - 4	
Answer	Yes
Document Name	
Comment	
Likes 0	
Dislikes 0	
Response	
Thank you for your support.	
Jodirah Green - ACES Power Marketing - 1,3,4,5,6 - MRO,WECC,Texas RE,SERC,RF, Group Name ACES Collaborators	
Answer	Yes
Document Name	
Comment	
Likes 0	
Dislikes 0	
Response	
Thank you for your support.	
Rachel Coyne - Texas Reliability Entity, Inc. - 10	
Answer	Yes
Document Name	
Comment	

Likes 0	
Dislikes 0	
Response	
Thank you for your support.	
Gail Elliott - Gail Elliott On Behalf of: Michael Moltane, International Transmission Company Holdings Corporation, 1; - Gail Elliott	
Answer	Yes
Document Name	
Comment	
Likes 0	
Dislikes 0	
Response	
Thank you for your support.	
Jennifer Neville - Western Area Power Administration - 6	
Answer	Yes
Document Name	
Comment	
Likes 0	
Dislikes 0	
Response	
Thank you for your support.	

Joseph Scott - Lower Colorado River Authority - 5	
Answer	Yes
Document Name	
Comment	
Likes 0	
Dislikes 0	
Response	
Thank you for your support.	
Jodi Yeary - AEP - 3	
Answer	Yes
Document Name	
Comment	
Likes 0	
Dislikes 0	
Response	
Thank you for your support.	
Naresh Latchman - Georgia System Operations Corporation - 3	
Answer	Yes
Document Name	
Comment	

Likes 0	
Dislikes 0	
Response	
Thank you for your support.	
John Pearson - ISO New England, Inc. - 2	
Answer	Yes
Document Name	
Comment	
Likes 0	
Dislikes 0	
Response	
Thank you for your support.	
Laura Brignola - Constellation - 6	
Answer	
Document Name	
Comment	
Not Applicable to Constellation.	
Likes 0	
Dislikes 0	
Response	
Thank you for your feedback.	

Kirsten Rowley - Midcontinent ISO, Inc. - 2, Group Name ISO/RTO Council (IRC) Standards Review Committee (SRC)	
Answer	
Document Name	
Comment	
No comment.	
Likes 0	
Dislikes 0	
Response	
Thank you for your feedback.	
Khang Le - Seminole Electric Cooperative, Inc. - 1	
Answer	
Document Name	
Comment	
See comment in Question 8	
Likes 0	
Dislikes 0	
Response	
Thank you for your comment. Please see response to Question 8.	
Lucinda Bradshaw - Lucinda Bradshaw On Behalf of: Byron Booker, Oncor Electric Delivery, 1; - Lucinda Bradshaw	
Answer	
Document Name	

Comment	
Oncor Electric Delivery Company LLC has no new comments on the most recent revisions shown in 2023-06-cip-014-4-redline-to-last-posted-03312026.docx. Instead, Oncor incorporates by reference here its previous comments submitted herein on November 5, 2024 and July 21, 2025.	
Likes 0	
Dislikes 0	
Response	
Thank you for your feedback. The Drafting Team notes that no new comments were submitted for Requirement R1. Please see the prior responses to the comments submitted in 2024 and 2025.	

2. Do you agree with the modifications made in CIP-014-4 with new Requirement R2 to address the issues identified in the SAR? If you do not agree, please provide your recommendation and, if appropriate, technical or procedural justification.

Constantin Chitescu - Ontario Power Generation Inc. - 5

Answer	No
Document Name	
Comment	

OPG supports the following NPCC Regional Standards Committee's comments:

"The Technical Rationale is very clear that proximate facilities identified under R2 are only intended to be used for the R5 risk assessment and the R6 third-party verification, and that they are not meant to carry forward into R7–R10. R2 should clarify that existing or built "applicable Transmission station(s) or Transmission substation(s) identified in Requirement R1" shall be included in the proximity test. Planned substations may not have a fence line to measure against if they are not built yet. The drafting team should clarify which fence line (property or substation) is the deciding fence line for the proximity rule and do entities have to coordinate with other entities.

Technical Rational for R2: "The Transmission station(s) or Transmission substation(s) identified in Requirement R2 are only intended for use in the Requirement R5 risk assessment and the Requirement R6 third-party verification to properly account for additional equipment that, if also damaged during an event, could lead to loss of additional Facilities. They are not intended to be subject to Requirements R7 through R10. Requirements R7 through R10 are only relevant for the Transmission substation(s) or Transmission substation(s) identified in Requirement R1."
The use of the word "Proximate" seem to intend an estimation and is at the discretion of the entity of what is a close Transmission Substation or Station. Then the requirement states a specific distance and a way to measure that distance. TFIST suggest removing the word "Proximate".
NPCC RSC suggest modifying R2 to read "Transmission station(s) and Transmission substation(s) identified in CIP-002". If the objective is to perform a separate process or analysis to identify applicable assets, then the assessment should occur in CIP-002."

Likes 0	
Dislikes 0	

Response

Thank you for your comment. Given that the assessment occurs every three years, the DT assumed that development of new applicable stations or associated property acquisition would be sufficiently underway to allow for a reasonably identifiable station boundary.

Ruida Shu - Northeast Power Coordinating Council - 10, Group Name NPCC RSC

Answer	No

Document Name	
Comment	

The Technical Rationale is very clear that proximate facilities identified under R2 are only intended to be used for the R5 risk assessment and the R6 third-party verification, and that they are not meant to carry forward into R7–R10.

R2 should clarify that existing or built “applicable Transmission station(s) or Transmission substation(s) identified in Requirement R1” shall be included in the proximity test. Planned substations may not have a fence line to measure against if they are not built yet.

The drafting team should clarify which fence line (property or substation) is the deciding fence line for the proximity rule and do entities have to coordinate with other entities.

Technical Rational for R2: “The Transmission station(s) or Transmission substation(s) identified in Requirement R2 are only intended for use in the Requirement R5 risk assessment and the Requirement R6 third-party verification to properly account for additional equipment that, if also damaged during an event, could lead to loss of additional Facilities. They are not intended to be subject to Requirements R7 through R10. Requirements R7 through R10 are only relevant for the Transmission substation(s) or Transmission substation(s) identified in Requirement R1.”

The use of the word “Proximate” seem to intend an estimation and is at the discretion of the entity of what is a close Transmission Substation or Station. Then the requirement states a specific distance and a way to measure that distance. TFIST suggest removing the word “Proximate”.

NPCC RSC suggest modifying R2 to read “Transmission station(s) and Transmission substation(s) identified in CIP-002”. If the objective is to perform a separate process or analysis to identify applicable assets, then the assessment should occur in CIP-002.

Likes 0	
Dislikes 0	

Response

Thank you for your comment. Given that the assessment occurs every three years, the DT assumed that development of new applicable stations or associated property acquisition would be sufficiently underway to allow for a reasonably identifiable station boundary.

Gail Elliott - Gail Elliott On Behalf of: Michael Moltane, International Transmission Company Holdings Corporation, 1; - Gail Elliott

Answer	No

Document Name	
Comment	
ITC supports the distance of 1500 feet or 457 meters (the shortest distance, measured substation fence line to substation fence line) selected by the drafting team for proximate Transmission station(s) and Transmission substation(s). However, we are concerned Transmission stations and Transmission substations owned by other entities who CIP-014 may or may not be applicable cannot be compelled to provide the information necessary for entities to comply with CIP-014. Further, while GIS tools can identify stations and substations within the specified proximity, it can be difficult to determine whose station they might be and if they are Transmission station(s) or Transmission substation(s) ITC suggests narrowing the scope to existing BES Transmission station(s) and BES Transmission substation(s) which are owned by the applicable entity. As an alternative, ITC suggests a requirement that neighboring TO's must share the station name and GIS location on the necessary periodic basis to their neighboring TOs.	
Likes 0	
Dislikes 0	
Response	
Thank you for your comments. The SAR instructed the DT to consider all proximate stations without distinguishing based on ownership.	
Timothy Singh - Timothy Singh On Behalf of: Israel Perez, Salt River Project, 6, 3, 5, 1; Jennifer Bennett, Salt River Project, 6, 3, 5, 1; Laura Somak, Salt River Project, 6, 3, 5, 1; Matthew Jaramilla, Salt River Project, 6, 3, 5, 1; - Timothy Singh	
Answer	No
Document Name	
Comment	
SRP disagrees with R2. No voltage thresholds are mentioned for the proximate sites. Proximate sites can be smaller substations that TOs are responsible for, but that currently (or in the future) have no reason to be protected as larger BES sites. Clarification and direction are needed to determine which substations must comply with R2.	
Likes 0	

Dislikes 0	

Response

Thank you for your comments. To provide guidance and clarity regarding voltage class, the proximate station definition was limited to BES facilities, thereby establishing clear bounds on the types of proximate stations that would fall under Requirement R2.

Oshara Narangoda - Oshara Narangoda On Behalf of: Aditya Menon, Hydro One Networks, Inc., 1; - Oshara Narangoda

Answer	No
Document Name	

Comment

From Hydro One's perspective, the DHS–DOJ Bomb Threat Stand-Off Card (and the 457 m distance) isn't something that's formally adopted or standardized across Canadian jurisdictions. While it's a well-known U.S. reference, we'd see some challenges applying a specific, prescribed blast radius here without tying it back to Canadian authorities or local context.

Additionally, Our SMEs' main concern is that locking utilities into a fixed distance feels counter to a risk-based physical security program. Bomb threat scenarios are highly site-specific and defining a single radius could oversimplify things or even conflict with how a utility's threat and risk assessment is structured. In practice, we'd expect credible bomb threats to be evaluated through our existing Physical Security Threat Risk Assessment (PSTRA) process, with controls documented in the Physical Security Plan (PSP) where the risk justifies it.

Because of that, we generally favor language that allows utilities to define and justify their approach using a documented, risk-based process, informed by DHS/DOJ guidance or other relevant competent authorities, depending on jurisdiction.

Likes 0	
Dislikes 0	

Response

Thank you for your comments. The DT attempted to accommodate earlier requests for a specific distance and sought to reference published, publicly available documents. Accordingly, the DHS-DOJ Bomb Threat Standoff Card was selected. This document provides technically supported damage distances based on various scenarios.

Chantal Mazza - Chantal Mazza On Behalf of: Junji Yamaguchi, Hydro-Quebec (HQ), 1, 5; Nicolas Turcotte, Hydro-Quebec (HQ), 1, 5; - Chantal Mazza	
Answer	No
Document Name	
Comment	

Hydro-Québec supports the following NPCC RSC comments:

The Technical Rationale is very clear that proximate facilities identified under R2 are only intended to be used for the R5 risk assessment and the R6 third-party verification, and that they are not meant to carry forward into R7–R10.

R2 should clarify that existing or built “applicable Transmission station(s) or Transmission substation(s) identified in Requirement R1” shall be included in the proximity test. Planned substations may not have a fence line to measure against if they are not built yet.

The drafting team should clarify which fence line (property or substation) is the deciding fence line for the proximity rule and do entities have to coordinate with other entities.

Technical Rational for R2: “The Transmission station(s) or Transmission substation(s) identified in Requirement R2 are only intended for use in the Requirement R5 risk assessment and the Requirement R6 third-party verification to properly account for additional equipment that, if also damaged during an event, could lead to loss of additional Facilities. They are not intended to be subject to Requirements R7 through R10. Requirements R7 through R10 are only relevant for the Transmission substation(s) or Transmission substation(s) identified in Requirement R1.”

The use of the word “Proximate” seem to intend an estimation and is at the discretion of the entity of what is a close Transmission Substation or Station. Then the requirement states a specific distance and a way to measure that distance. TFIST suggest removing the word “Proximate”.

NPCC RSC suggest modifying R2 to read “Transmission station(s) and Transmission substation(s) identified in CIP-002”. If the objective is to perform a separate process or analysis to identify applicable assets, then the assessment should occur in CIP-002.

Likes 0	
Dislikes 0	
Response	

Thank you for your comment. Given that the assessment occurs every three years, the DT assumed that development of new applicable stations or associated property acquisition would be sufficiently underway to allow for a reasonably identifiable station boundary.	
Isidoro Behar - Long Island Power Authority - 1	
Answer	No
Document Name	
Comment	
This Draft improves technical linkage between applicable and proximate stations, however it does not fully resolve the ambiguity regarding identification, scope, and compliance applicability. The standard still lacks clarity on: • What constitutes "identification" under R1 • And whether proximate stations are subject to downstream requirements. The lack of clarity creates potential confusion regarding scope and compliance expectations, particularly when proximate stations are owned by different entities. (Technical Rationale for R2 clarifies that proximate Transmission stations are intended to be used only for R5 risk assessment and R6 third party verification, and are not intended to be subject to R7 through R10). To ensure consistency, recommendation is to incorporate this clarification directly into the requirement language to avoid any differing interpretations. • We recommend that the drafting team review and standardize the use of "applicable" and "proximate" throughout the standard, and consider including a clear mapping or explanatory guidance indicating how each requirement applies to each category of station.	
Likes 0	
Dislikes 0	
Response	
Thank you for your comments. To provide guidance and clarity regarding voltage class, the proximate station definition was limited to BES facilities, thereby establishing clear bounds on the types of proximate stations that would fall under Requirement R2.	
Daniel Valle - New York Power Authority - 1	
Answer	No
Document Name	

Comment	
NYPA supports the comments submitted by NPCC RSC.	
Likes 0	
Dislikes 0	
Response	
Thank you for your comments. Please see responses to the comments submitted by NPCC RSC.	
Zahid Qayyum - New York Power Authority - 5	
Answer	No
Document Name	
Comment	
NYPA Supports NPCC RSC TFIST Comments.	
Likes 0	
Dislikes 0	
Response	
Thank you for your comments. Please see responses to the comments submitted by NPCC TFIST.	
Tamarra Hardie - Public Utility District No. 1 of Chelan County - 6, Group Name CHPD	
Answer	No
Document Name	
Comment	
While the Technical Rationale notes that facilities identified in R2 are only intended for use in R5 & R6 and not in R7-R10. This should be made clear within the standard language itself and not reliant on the use of the supplementary document.	

The technical rationale for R2 states that the 1500 feet requirement refers to the DHS-DOJ Bomb Threat Stand-off Card as justification for this distance. The Bomb Threat Card reflects personnel evacuation distances rather than infrastructure damage distances. CHPD recommends using damage-based distances supported by historical or technical research. Additionally, the measurement from substation fence line to substation fence line can present some unrealistic distance scenarios for CIP-014 assessments. For instance, a substation may have a large, fenced area with power equipment positioned within the fence perimeter in such a way that distances may exceed 1500 feet from the proposed event blast location to an adjacent or “proximate” facility. It is recommended to modify this language to be less prescriptive with this distance requirement and instead allow utilities to either: -use the provided R2 distance, whether that is the current revision’s 1500 ft requirement or a distance based upon damage distances (preferably one grounded in damage distances) OR -allow utilities to select damage distance thresholds for identifying “proximate” stations based upon provided NERC guidance or DHS/DOJ/CISA resources for a variety of threat types but also require utilities to provide rationale within their CIP-014 methodologies and/or assessments for why they selected the specific distance threshold or excluded “proximate” stations from identification. CHPD suggests removing the word 'proximate'. It is uncommon standard language, alternatives could be 'near' or 'nearby'.	
Likes 0	
Dislikes 0	
Response	
Thank you for your comments. The DT attempted to accommodate earlier requests for a specific distance and sought to reference published, publicly available documents. Accordingly, the DHS-DOJ Bomb Threat Standoff Card was selected. This document provides technically supported damage distances based on various scenarios.	
Jeffrey Streifling - NB Power Corporation - 1	
Answer	No
Document Name	
Comment	

The Technical Rationale is very clear that proximate facilities identified under R2 are only intended to be used for the R5 risk assessment and the R6 third-party verification, and that they are not meant to carry forward into R7–R10. R2 should clarify that existing or built “applicable Transmission station(s) or Transmission substation(s) identified in Requirement R1” shall be included in the proximity test. Planned substations may not have a fence line to measure against if they are not built yet. The drafting team should clarify which fence line (property or substation) is the deciding fence line for the proximity rule and do entities have to coordinate with other entities. Technical Rational for R2: “The Transmission station(s) or Transmission substation(s) identified in Requirement R2 are only intended for use in the Requirement R5 risk assessment and the Requirement R6 third-party verification to properly account for additional equipment that, if also damaged during an event, could lead to loss of additional Facilities. They are not intended to be subject to Requirements R7 through R10. Requirements R7 through R10 are only relevant for the Transmission substation(s) or Transmission substation(s) identified in Requirement R1.” The use of the word “Proximate” seem to intend an estimation and is at the discretion of the entity of what is a close Transmission Substation or Station. Then the requirement states a specific distance and a way to measure that distance. TFIST suggest removing the word “Proximate”. NPCC RSC suggest modifying R2 to read “Transmission station(s) and Transmission substation(s) identified in CIP-002”. If the objective is to perform a separate process or analysis to identify applicable assets, then the assessment should occur in CIP-002.	
Likes 0	
Dislikes 0	
Response	
Thank you for your comment. Given that the assessment occurs every three years, the DT assumed that development of new applicable stations or associated property acquisition would be sufficiently underway to allow for a reasonably identifiable station boundary.	
Bob Cardle - Bob Cardle On Behalf of: Marco Rios, Pacific Gas and Electric Company, 3, 1, 5; Sandra Ellis, Pacific Gas and Electric Company, 3, 1, 5; Tyler Brun, Pacific Gas and Electric Company, 3, 1, 5; - Bob Cardle	
Answer	No
Document Name	

Comment
The new requirement to list any transmission station located within 1,500 ft of a candidate facility acknowledges the risk of multi-station, single-attack scenarios, yet the fixed distance appears arbitrary. To prevent over- or under-inclusion, particularly in dense urban corridors, PG&E recommends that NERC cite the threat analysis that produced the 1,500 ft figure and allow entities to justify an alternative distance where a quantified risk assessment demonstrates equivalent or better coverage. This added clarity will reduce regional interpretation disputes and avoid unnecessary modelling effort. The requirement also presents substantial implementation challenges related to inter-utility coordination. Assessing the physical security implications of an attack on a neighboring utility's substation, particularly where no joint-ownership or operational agreement is already in place, will necessitate new formal data-sharing protocols and coordination mechanisms. This is likely to produce administrative complexity, delays in risk assessments, and disputes over sensitive information sharing. PG&E urges the NERC DT to provide specific guidance, or a recommended template for inter-utility agreements, to facilitate this critical coordination.

Likes 0	
Dislikes 0	

Response
Thank you for your comments. The DT attempted to accommodate earlier requests for a specific distance and sought to reference published, publicly available documents. Accordingly, the DHS-DOJ Bomb Threat Standoff Card was selected. This document provides technically supported damage distances based on various scenarios.

Ronald Hoover - Bonneville Power Administration - 1,3,5,6 - WECC	
Answer	No
Document Name	

Comment
BPA Transmission Planning generally agrees with the new Requirement R2 as it clearly defines the shortest distance of applicability for substations in proximity. However, there is concern that this limit might be too short, and a higher range of distance should be considered. Proximity substations owned by other utilities could be within 0.5-2 miles of each other, a distance that could be covered by physical attackers in a short span of time. Transmission Planning recommends using technically-supported damage distances or allowing utilities the flexibility to select and justify their own distances. Additionally, the use of the term "identify" is unclear; it is not obvious whether this requires documentation or ongoing tracking.

Likes 0	
Dislikes 0	
Response	
Thank you for your comments. The DT attempted to accommodate earlier requests for a specific distance and sought to reference published, publicly available documents. Accordingly, the DHS-DOJ Bomb Threat Standoff Card was selected. This document provides technically supported damage distances based on various scenarios.	
Alyssia Rhoads - Public Utility District No. 1 of Snohomish County - 1	
Answer	No
Document Name	
Comment	
SNPD does not fully support the modifications made in new Requirement R2. SNPD requests clarification regarding which voltage classes are applicable for proximate Transmission stations and Transmission substations. The absence of a defined voltage threshold introduces ambiguity and may result in the inclusion of facilities that are not relevant from a security perspective. To address this, SNPD recommends that Requirement R2 exclude Transmission stations and substations operating below 200 kV from being considered proximate facilities.	
Likes 0	
Dislikes 0	
Response	
Thank you for your comments. To provide guidance and clarity regarding voltage class, the proximate station definition was limited to BES facilities, thereby establishing clear bounds on the types of proximate stations that would fall under Requirement R2.	
Stephanie Kenny - Edison International - Southern California Edison Company - 6	
Answer	Yes
Document Name	
Comment	

See EEI Comments	
Likes 0	
Dislikes 0	
Response	
Thank you for your comments. Please see responses to the comments submitted by EEI.	
Daniel Gacek - Exelon - 1, Group Name Exelon	
Answer	Yes
Document Name	
Comment	
Exelon agrees with the modifications made to Requirement R2. Exelon also support the edit to the Technical Rationale suggested in the EEI comments.	
Likes 0	
Dislikes 0	
Response	
Thank you for your comments. Please see responses to the comments submitted by NPCC RSC.	
Lori Frisk - Lori Frisk On Behalf of: Hillary Creurer, Allete - Minnesota Power, Inc., 1; - Lori Frisk	
Answer	Yes
Document Name	
Comment	
Minesota Power supports EEI's comments	
Likes 0	

Dislikes 0	
Response	
Thank you for your comments. Please see responses to the comments submitted by EEI.	
Todd Garwick - Edison International - Southern California Edison Company - 3	
Answer	Yes
Document Name	
Comment	
See comments submitted by Edison Electric Institute	
Likes 0	
Dislikes 0	
Response	
Thank you for your comments. Please see responses to the comments submitted by EEI.	
Hayk Zargaryan - Edison International - Southern California Edison Company - 1	
Answer	Yes
Document Name	
Comment	
See comments submitted by Edison Electric Institute.	
Likes 0	
Dislikes 0	
Response	
Thank you for your support.	
Clay Walker - Clay Walker On Behalf of: Robert Hirchak, Cleco Corporation, 6, 5, 1, 3; - Clay Walker	

Answer	Yes
Document Name	
Comment	
Cleco agrees with EEI comments.	
Likes 0	
Dislikes 0	
Response	
Thank you for your comments. Please see responses to the comments submitted by EEI.	
Andrea Koch - Edison Electric Institute - NA - Not Applicable - NA - Not Applicable	
Answer	Yes
Document Name	
Comment	
EEI agrees with the modification made to Requirement R2. EEI recommends a minor revision to the Technical Rationale for Requirement R2: “Requirements R7 through R10 are only relevant for the Transmission **station(s)** or Transmission substation(s) identified in Requirement R1.”	
Likes 0	
Dislikes 0	
Response	
Thank you for your comments. Please see responses to the comments submitted by EEI.	
Dan Perry - TXNM Energy - 1,3,5 - WECC,Texas RE	
Answer	Yes

Document Name	
Comment	
TXNM Energy agrees with EEI submitted comments repeated below. EEI agrees with the modification made to Requirement R2. EEI recommends a minor revision to the Technical Rationale for Requirement R2: "Requirements R7 through R10 are only relevant for the Transmission **sub**station(s) or Transmission substation(s) identified in Requirement R1."	
Likes 0	
Dislikes 0	
Response	
Thank you for your comments. Please see responses to the comments submitted by EEI.	
Alan Kloster - Alan Kloster On Behalf of: Jeremy Harris, Evergy, 3, 5, 1, 6; Kevin Frick, Evergy, 3, 5, 1, 6; Marcus Moor, Evergy, 3, 5, 1, 6; Tiffany Lake, Evergy, 3, 5, 1, 6; - Alan Kloster	
Answer	Yes
Document Name	
Comment	
Evergy supports and incorporates by reference the comments of the Edison Electric Institute (EEI) for question #2.	
Likes 0	
Dislikes 0	
Response	
Thank you for your comments. Please see responses to the comments submitted by EEI.	

Matt Bullard - Dominion - Dominion Virginia Power - 3, Group Name Dominion Energy	
Answer	Yes
Document Name	
Comment	
DE agrees with the modifications, but DE has concern that the rationale for 1500ft distance for proximity sites to be considered and applicable threats. The document “CIP-014-4_Technical Rationale Clean_03-031-2026” references the Department of Homeland Security (DHS) – Department of Justice (DOJ) Bomb Threat Stand-Off Card in regard to establishing the 1500ft distance. This reference was developed for establishing evacuation distances for human life safety in the event an explosive is found in a vehicle or other delivery method to allow for first responders to investigate. The impact of an explosive to human life versus substation components or an operations center are not the same. If the intent is to establish proximity site distances based on the “Mandatory Evacuation Distance, this is most closely aligned with the Semi-Trailer threat size which is multiple orders of magnitude higher than the maximum explosive size indicated in the 2026 Electricity Sector Design Basis Threat document from the E-ISAC. This explosive size is also orders of magnitude higher than design basis threat sizes typically utilized with the blast design community, especially within the United States. If the intent is to reference a smaller explosive size in the “Shelter-In-Place or Preferred Evacuation Distance” these are broad ranges and again based on human life safety, not substation component response to a threat size. In summary, the reference document is not appropriate for establishing stand-off distances (proximity distance relative to an explosive) or design basis threat explosive sizes for substations or operations centers. These should be established based on a specific design basis threat applicable to the industry and the response of the substation equipment or the operations center building to that threat size, as is standard practice with the blast design community.	
Likes 0	
Dislikes 0	
Response	
Thank you for your comments. The DT attempted to accommodate earlier requests for a specific distance and sought to reference published, publicly available documents. Accordingly, the DHS-DOJ Bomb Threat Standoff Card was selected. This document provides technically supported damage distances based on various scenarios. To provide guidance and clarity regarding voltage class, the proximate station definition was limited to BES facilities, thereby establishing clear bounds on the types of proximate stations that would fall under Requirement R2.	
Joseph Gatten - Great River Energy - 3, Group Name Great River Energy	

Answer	Yes
Document Name	
Comment	
No additional comment.	
Likes 0	
Dislikes 0	
Response	
Thank you for your support.	
Randy Peters - Manitoba Hydro - 1,3,5,6 - MRO	
Answer	Yes
Document Name	
Comment	
Manitoba Hydro believes that having a clear distance threshold in Requirement R2 will be helpful from a compliance and audit perspective. However, we also believe TOs should have some flexibility to consider additional criteria beyond the 1500 feet hard limit separation distance. The goal is to protect against cascading outages; the strict 1,500-foot threshold may not reflect the actual diverse physical security risks at each site and may ignore surrounding terrain and shielding, including natural barriers. In the Technical Rationale under R2, the last paragraph, it is recommended that SDT revise the paragraph as follows. “The Transmission station(s) or Transmission substation(s) identified in Requirement R2 are only intended for use in the Requirement R5 risk assessment and the Requirement R6 third-party verification to properly account for additional BES Facilities that could be lost due to equipment damage that, if also damaged during an event	
Likes 0	
Dislikes 0	
Response	

Thank you for your comment. Given that the assessment occurs every three years, the DT assumed that development of new applicable stations or associated property acquisition would be sufficiently underway to allow for a reasonably identifiable station boundary. The DT attempted to accommodate earlier requests for a specific distance and sought to reference published, publicly available documents. Accordingly, the DHS-DOJ Bomb Threat Standoff Card was selected. This document provides technically supported damage distances based on various scenarios.	
Rachel Schuldt - Black Hills Corporation - 6, Group Name Black Hills Corporation - All Segments	
Answer	Yes
Document Name	
Comment	
Black Hills Corporation agrees with the modifications for Requirement R2.	
Likes 0	
Dislikes 0	
Response	
Thank you for your support.	
Amy Casuscelli - Xcel Energy, Inc. - 1,3,5,6 - MRO,WECC	
Answer	Yes
Document Name	
Comment	
Xcel Energy supports EEI comments	
Likes 0	
Dislikes 0	

Response	
Thank you for your support. Please see responses to EEI's comments.	
Kelly Heims - Central Iowa Power Cooperative - 1	
Answer	Yes
Document Name	
Comment	
Central Iowa Power Cooperative supports the MRO's NERC Standards Review Forum (NSRF) and ACES comments for Question 2.	
Likes 0	
Dislikes 0	
Response	
Thank you for your support. Please see responses to the MRO's NERC Standards Review Forum (NSRF) and ACES comments.	
Misty Carneal - Duke Energy - 1,3,5,6 - SERC,RF	
Answer	Yes
Document Name	
Comment	
Duke Energy supports the modifications.	
Likes 0	
Dislikes 0	
Response	
Thank you for your support.	
John Pearson - ISO New England, Inc. - 2	
Answer	Yes

Document Name	
Comment	
Likes 0	
Dislikes 0	
Response	
Thank you for your support.	
Naresh Latchman - Georgia System Operations Corporation - 3	
Answer	Yes
Document Name	
Comment	
Likes 0	
Dislikes 0	
Response	
Thank you for your support.	
Jodi Yeary - AEP - 3	
Answer	Yes
Document Name	
Comment	
Likes 0	
Dislikes 0	
Response	

Thank you for your support.	
Joseph Scott - Lower Colorado River Authority - 5	
Answer	Yes
Document Name	
Comment	
Likes 0	
Dislikes 0	
Response	
Thank you for your support.	
Jennifer Neville - Western Area Power Administration - 6	
Answer	Yes
Document Name	
Comment	
Likes 0	
Dislikes 0	
Response	
Thank you for your support.	
Rachel Coyne - Texas Reliability Entity, Inc. - 10	
Answer	Yes
Document Name	
Comment	

Likes 0	
Dislikes 0	
Response	
Thank you for your support.	
Nick Leathers - Nick Leathers On Behalf of: David Jendras Sr, Ameren - Ameren Services, 3, 6, 1; - Nick Leathers	
Answer	Yes
Document Name	
Comment	
Likes 0	
Dislikes 0	
Response	
Thank you for your support.	
Jodirah Green - ACES Power Marketing - 1,3,4,5,6 - MRO,WECC,Texas RE,SERC,RF, Group Name ACES Collaborators	
Answer	Yes
Document Name	
Comment	
Likes 0	
Dislikes 0	
Response	
Thank you for your support.	
Carver Powers - Utility Services, Inc. - 4	
Answer	Yes

Document Name	
Comment	
Likes 0	
Dislikes 0	
Response	
Thank you for your support.	
Nathan Browder - Nathan Browder On Behalf of: Matt Lewis, Lower Colorado River Authority, 1, 5; - Nathan Browder	
Answer	Yes
Document Name	
Comment	
Likes 0	
Dislikes 0	
Response	
Thank you for your support.	
Said Sidiqi - Tennessee Valley Authority - 1,3,5,6 - SERC	
Answer	Yes
Document Name	
Comment	
Likes 0	
Dislikes 0	
Response	

Thank you for your support.	
Thomas Brinckman - CenterPoint Energy Houston Electric, LLC - 1 - Texas RE	
Answer	Yes
Document Name	
Comment	
Likes 0	
Dislikes 0	
Response	
Thank you for your support.	
Joshua London - Eversource Energy - 1, Group Name Eversource	
Answer	Yes
Document Name	
Comment	
Likes 0	
Dislikes 0	
Response	
Thank you for your support.	
TRACEY JOHNSON - Southern Indiana Gas and Electric Co. - 3,5,6 - RF	
Answer	Yes
Document Name	
Comment	

Likes 0	
Dislikes 0	
Response	
Thank you for your support.	
Katrina Lyons - Georgia System Operations Corporation - 4	
Answer	Yes
Document Name	
Comment	
Likes 0	
Dislikes 0	
Response	
Thank you for your support.	
Jennifer Wright - Sempra - San Diego Gas and Electric - 5	
Answer	Yes
Document Name	
Comment	
Likes 0	
Dislikes 0	
Response	
Thank you for your support.	
Sarah Miller - FirstEnergy - FirstEnergy Corporation - 4, Group Name FE Voters	
Answer	Yes

Document Name	
Comment	
Likes 0	
Dislikes 0	
Response	
Thank you for your support.	
Tasha Ward - Midwest Reliability Organization - 10	
Answer	Yes
Document Name	
Comment	
Likes 0	
Dislikes 0	
Response	
Thank you for your support.	
Stephen Stafford - Stephen Stafford On Behalf of: Greg Davis, Georgia Transmission Corporation, 1; - Stephen Stafford	
Answer	Yes
Document Name	
Comment	
Likes 0	
Dislikes 0	
Response	

Thank you for your support.	
Anna Martinson - MRO - 1,2,3,4,5,6 - MRO, Group Name MRO Group	
Answer	Yes
Document Name	
Comment	
Likes 0	
Dislikes 0	
Response	
Thank you for your support.	
Karen Artola - CPS Energy - 1,3,5 - Texas RE	
Answer	Yes
Document Name	
Comment	
Likes 0	
Dislikes 0	
Response	
Thank you for your support.	
Alison Nickells - NiSource - Northern Indiana Public Service Co. - 1	
Answer	Yes
Document Name	
Comment	

Likes 0	
Dislikes 0	
Response	
Thank you for your support.	
Wendy Kalidass - U.S. Bureau of Reclamation - 5	
Answer	Yes
Document Name	
Comment	
Likes 0	
Dislikes 0	
Response	
Thank you for your support.	
Matthew Nicklin - Southern Illinois Power Cooperative - 1,5 - SERC	
Answer	Yes
Document Name	
Comment	
Likes 0	
Dislikes 0	
Response	
Thank you for your support.	
Rebika Yitna - Rebika Yitna On Behalf of: Roger Brand, MEAG Power, 3, 1; - Rebika Yitna	
Answer	Yes

Document Name	
Comment	
Likes 0	
Dislikes 0	
Response	
Thank you for your support.	
Tremayne Brown - ReliabilityFirst - 10	
Answer	Yes
Document Name	
Comment	
Likes 0	
Dislikes 0	
Response	
Thank you for your support.	
Kevin Conway - Western Power Pool - 4	
Answer	Yes
Document Name	
Comment	
Likes 0	
Dislikes 0	
Response	

Thank you for your support.	
Amy Wilke - American Transmission Company, LLC - 1	
Answer	Yes
Document Name	
Comment	
Likes 0	
Dislikes 0	
Response	
Thank you for your support.	
Jessica Cordero - Unisource - Tucson Electric Power Co. - 1	
Answer	Yes
Document Name	
Comment	
Likes 0	
Dislikes 0	
Response	
Thank you for your support.	
Donna Wood - Tri-State G and T Association, Inc. - 1	
Answer	Yes
Document Name	
Comment	

Likes 0	
Dislikes 0	
Response	
Thank you for your support.	
Dwanique Spiller - Berkshire Hathaway - NV Energy - 5	
Answer	Yes
Document Name	
Comment	
Likes 0	
Dislikes 0	
Response	
Thank you for your support.	
Kennedy Meier - Electric Reliability Council of Texas, Inc. - 2	
Answer	
Document Name	
Comment	
ERCOT joins the comments submitted by the ISO/RTO Council (IRC) Standards Review Committee (SRC) and adopts them as its own.	
Likes 0	
Dislikes 0	
Response	
Thank you for your support.	
Lucinda Bradshaw - Lucinda Bradshaw On Behalf of: Byron Booker, Oncor Electric Delivery, 1; - Lucinda Bradshaw	

Answer	
Document Name	
Comment	
Oncor Electric Delivery Company LLC has no new comments on the most recent revisions shown in 2023-06-cip-014-4-redline-to-last-posted-03312026.docx. Instead, Oncor incorporates by reference here its previous comments submitted herein on November 5, 2024 and July 21, 2025.	
Likes 0	
Dislikes 0	
Response	
Thank you for your support. Please see responses to the previous comments submitted on November 5, 2024 and July 21, 2025.	
Khang Le - Seminole Electric Cooperative, Inc. - 1	
Answer	
Document Name	
Comment	
See comment in Question 8	
Likes 0	
Dislikes 0	
Response	
Thank you for your support.	
Kirsten Rowley - Midcontinent ISO, Inc. - 2, Group Name ISO/RTO Council (IRC) Standards Review Committee (SRC)	
Answer	
Document Name	
Comment	

The ISO/RTO Council (IRC) Standards Review Committee (SRC) recommends that the drafting team acknowledge within the Technical Rationale that the Transmission Owner might be the only entity that has the information needed to determine which Transmission stations or substations are within 1,500 feet or 457 meters of an applicable Transmission station or substation under Requirement R2. Consequently, entities performing unaffiliated third-party verifications under Requirement R6 may not be able to verify that a Transmission Owner has properly identified all Transmission stations or Transmission substations within 1,500 feet or 457 meters of applicable stations or substations identified under Requirement R1. As a result, these unaffiliated third parties may need to rely on data provided by the TO when no other data is available, which could undermine the usefulness of unaffiliated third-party verifications. Note: AESO, ISO-NE, and SPP abstain from these comments.

Likes 0	
Dislikes 0	

Response
Thank you for your comments. The DT attempted to accommodate earlier requests for a specific distance and sought to reference published, publicly available documents. Accordingly, the DHS-DOJ Bomb Threat Standoff Card was selected. This document provides technically supported damage distances based on various scenarios.

Laura Brignola - Constellation - 6	
Answer	
Document Name	

Comment
Not Applicable to Constellation.

Likes 0	
Dislikes 0	

Response
Thank you for your support.

3. Do you agree with the modifications made in CIP-014-4 with new Requirement R3 to address the issues identified in the SAR? If you do not agree, please provide your recommendation and, if appropriate, technical or procedural justification.	
Alison Nickells - NiSource - Northern Indiana Public Service Co. - 1	
Answer	No
Document Name	
Comment	
Remove technically justified. 3.1. Sometimes values such as acceptable load loss are not based on technically justified values.	
Likes 0	
Dislikes 0	
Response	
Thank you for your comments. If no justification is required, then thresholds will become arbitrary and perhaps even subject to manipulation to influence the risk assessments.	
Tasha Ward - Midwest Reliability Organization - 10	
Answer	No
Document Name	
Comment	
The language "A single justification may be used for multiple locations." does not prevent selection of least impactful attack or corresponding less severe Fault at multiple locations which could result in inappropriate Fault applications and may cause compliance as well as physical security gaps. The physical attack criteria does not require selection of highest severity or most electrically impactful Fault, only a "high-severity physical attack" which leaves room for less severe physical attack selections and thus less impactful and incongruent Fault selections. Three-phase to ground fault in part was used as a proxy in the past to identify the worst case scenario regardless of the physical attacks. The change in this draft allows Entities to select what may be more likely, but less severe, thus weakening the overall security as locations will be removed from requiring critical protections. The approach of selecting a Fault based on a credible high-severity physical attack	

increases the likelihood that the Fault could align with physical attacks identified in a Design Basis Threat (DBT) approach (one method to assess threats and risks) that have been observed at similar sites and circumstances, however it reduces the scope of severity of physical attacks that would be considered thus it reduces the scope of Faults that will be considered. This could result in discarding Faults that may occur due to more impactful physical attacks that could occur in the future and thus reduces resiliency to future threat escalations. The approach of selecting Faults that align with credible high-severity physical attacks will require physical security expertise involvement in the risk assessment process, much earlier than in the current process, and will require closer coordination between physical security expertise and power system studies expertise. This increases the risk that there is a lack of alignment and consistency of both physical attack selections at like stations and also types of Faults selected by differing Entities which will result in inconsistent applications of physical security measures. The R3.3.3.1 language could be interpreted to prevent Entities from selecting more impactful or serious Faults since now the Faults need to align with a credible high-severity physical attack instead one that, while not currently likely, could occur in the future. This constraint may cause compliance liability while also potentially reducing physical security posture. The above assessment by MRO related to R3.3.3 is perceived as a significant enough reduction of effectiveness to motivate voting negative for this draft.	
Likes 1	Jennie Wike, N/A, Wike Jennie
Dislikes 0	
Response	
Thank you for your comments. The standard cannot reasonably be written to mandate the worst possible event. The DT recognized that physical attack scenarios of the highest severity could be conceived of that would be devasting and even well beyond affecting an Interconnection, but such scenarios would not be credible. The DT feels that the phrase “credible high-severity physical attack” effectively and reasonably manages this issue such that entities should feel compelled to run something that is high in electrical severity but still rooted in reality. Furthermore, the DT feels that requiring a documented justification for the type of Fault(s) simulated prevents any entity from simply adopting the least impactful scenario.	
Bob Cardle - Bob Cardle On Behalf of: Marco Rios, Pacific Gas and Electric Company, 3, 1, 5; Sandra Ellis, Pacific Gas and Electric Company, 3, 1, 5; Tyler Brun, Pacific Gas and Electric Company, 3, 1, 5; - Bob Cardle	
Answer	No
Document Name	
Comment	

1. The phrases “unacceptable generation and load loss” in R3 Part 3.1 and “actual or more conservative clearing times” in R3 Part 3.3.5 are inherently subjective and open to regional interpretation. To promote uniform implementation, PG&E recommends that the NERC DT establish quantitative default benchmarks for generation and load loss thresholds, together with a clearing-time margin. Including such reference values—while still allowing entities to justify alternative criteria based on system characteristics—will align CIP-014-4 with the measurable approach used in the TPL standards and reduce the potential for inconsistent compliance findings across regions.

2. R3 Part 3.3.1.1 directs that simulations at the applicable station assume prior loss of communication and Protection Systems but does not specify the scope of that loss—whether all communication channels and all Protection System functions at the station are presumed lost, or whether the entity may model a subset based on the attack scenario justified under R3 Part 3.3.3. Defining the expected modelling approach, preferably with an example one-line diagram and timing table in the Technical Rationale, will allow entities to apply the requirement consistently and give verifiers and auditors a clear baseline for compliance testing.

3. Two clearing-time provisions in R3 Part 3.3 appear to direct different outcomes. R3 Part 3.3.1.3 requires delayed (remote) clearing at the applicable station unless otherwise technically substantiated, while R3 Part 3.3.5 requires actual or more conservative clearing times to be used. The relationship between the two is unclear and will likely produce inconsistent practice across entities. PG&E recommends that the NERC DT consolidate these provisions into a single clearing-time requirement that establishes a clear hierarchy among delayed/remote clearing, actual clearing times, and any shorter alternative supported by technical substantiation. A unified provision will support consistent simulation practice and reduce the potential for differing interpretations across regions.

4. The term “credible high-severity physical attack” in R3 Part 3.3.3 is central to the Fault-justification record but is not defined in CIP-014-4 or in the NERC Glossary. Without a shared reference, entities are likely to identify different attack scenarios and verifiers to apply different standards during their review. PG&E recommends that the NERC DT reference an established threat framework or at a minimum identify in the Technical Rationale the broad categories of attack the drafting team has in mind. Providing this anchor will support consistent Fault selection across entities and reduce interpretive disputes.

Likes 0	
Dislikes 0	

Response

Thank you for your comments. The DT worked extensively on the thresholds issue, and ultimately determined that leaving specific threshold number determination to the discretion of the entities, while also requiring justification, struck the right balance. Furthermore, the DT does not find the phrase “prior loss of communication and Protection Systems” to be ambiguous as to scope. Regarding clearing time descriptions, the DT believes the wording in R3 Part 3.3.1.3 and R3 Part 3.3.5 essentially describes the same thing. See previous response on “credible high-severity physical attack”.

Jeffrey Streifling - NB Power Corporation - 1

Answer	No
Document Name	
Comment	
Please see previous comment that was submitted by NPCC RSC. NPCC RSC believes that only the Transmission Planner (TP) is able to answer R3 and not the TO.	
Likes 0	
Dislikes 0	
Response	
Thank you for your comments. Suggestions that the TP be made responsible for parts of CIP-014-4 are beyond the scope of the SAR. Such a change will require an additional SAR and future changes to the standard.	
Tamarra Hardie - Public Utility District No. 1 of Chelan County - 6, Group Name CHPD	
Answer	No
Document Name	
Comment	
There on concerns with the modification of R3.3 in this draft revision. The description is problematic as it first assumes a high-severity physical attack is credible, then is unclear what 'high severity' refers to, whether the severity of the attack refers to the damage to station equipment, or to the scale of grid-impact. CHPD recommends clarification or re-writing to clarify what is meant by 'high severity'. Additionally, the requirement language is unclear if the same type of fault must be applied to the other stations within 1500' even if that would result in a scenario that is not credible or likely. Technical rationale for R3.1 states that the damage to nearby stations is "assumed to be collateral damage" but this is an assumption that does not have a technical justified basis as it relies upon The Bomb Threat Stand-off Card (from CIP-014 Technical Rationale for R2) which describes evacuation distances for threat types, not technically justified studies or research of expected damage thresholds for various threats. The standard also does not mention common definitions of threat types or guidance of which threats to assess. If all threat types are available to be studied but there are no common event definitions, then the standard will rely upon events definitions in entities documented methodologies, which may vary widely in scope and interpretation.	

R3.3.2 technical rationale refers to allowing other fault types but still relies upon entities' methodologies to describe the specific applicable threat(s), which could lead to inconsistencies in threat descriptions and/or significant increases to workload burden for the utility, 3rd party reviewers, and auditors. R3.3.4 requires "Removal of all Elements that Protection Systems and other controls are expected to automatically disconnect" but as written there is not a CIP-014 requirement to coordinate with neighbors, so how would a given entity know which protection systems and controls are expected to automatically disconnect at neighboring facilities without coordination? Also, the current language does not account for the possibility that the nearby station may not be electrically connected to the station under study in any meaningful capacity. R3.3.5 mentions 'actual' clearing times. Actual times would denote from an actual attack - in simulation, the best most utilities can study are expected times, unless of course that entity had an actual attack (a rare situation). CHPD recommends changing the term 'actual' to 'expected'. Lastly, as noted in the comments for R2 above, the use of the term 'proximate' is unusual and infrequently used in common language. CHPD would recommend changing this term to 'near' or 'nearby'.	
Likes 0	
Dislikes 0	
Response	
Thank you for your comments. The standard cannot reasonably be written to mandate the worst possible event. The DT recognized that physical attack scenarios of the highest severity could be conceived of that would be devasting and even well beyond affecting an Interconnection, but such scenarios would not be credible. The DT feels that the phrase "credible high-severity physical attack" effectively and reasonably manages this issue such that entities should feel compelled to run something that is high in electrical severity but still rooted in reality. Furthermore, the DT feels that requiring a documented justification for the type of Fault(s) simulated prevents any entity from simply adopting the least impactful scenario. The elements that are expected to be removed in R3.3.4 are those local to the affected transmission station or transmission substation, not the neighboring substation. The use of the phrase "actual or more conservative clearing times is intended to address your concern about R3.3.5. The "expected" clearing times should always be longer, i.e., more conservative, than the actual clearing times seen by the equipment.	
Jennifer Wright - Sempra - San Diego Gas and Electric - 5	
Answer	No
Document Name	
Comment	

SDG&E objects to the inclusion of thresholds in R3.1 “the criteria shall include, at a minimum, technically justified thresholds identifying unacceptable generation and load loss within an interconnection. We suggest striking it out altogether & allow TOs to document how they assess instability as they see fit for their own systems.	
Likes 0	
Dislikes 0	
Response	
Thank you for your comments. CIP-014 is intended to address interconnection instability, so events should be evaluated regarding how they impact the interconnection as a whole instead of a single Transmission Owner.	
Randy Peters - Manitoba Hydro - 1,3,5,6 - MRO	
Answer	No
Document Name	
Comment	
MH believes the requirement to develop a documented justification for the physical attack to be simulated in accordance with new sub-requirement R3.3.3 is not technically justifiable and is not cost-effective. MH recommends removing sub-requirement R3.3.3 from the revised standard.	
Likes 0	
Dislikes 0	
Response	
Thank you for your comments. The specification of the Fault type was a matter of extensive discussions within the drafting team, industry observers, the Regional Entities, and NERC. Allowing the individual TOs the flexibility to determine the Fault to study and provide a documented justification for the Fault type(s) to be simulated was mutually agreed upon by the aforementioned parties as preferable to explicitly mandating that every TO apply three-phase Faults in their simulations.	
Oshara Narangoda - Oshara Narangoda On Behalf of: Aditya Menon, Hydro One Networks, Inc., 1; - Oshara Narangoda	
Answer	No

Document Name	
Comment	

Hydro One is concerned that Requirement R2 and R3 assigns implicit accountability to Transmission Owners (TOs) for conducting or substantiating simulations involving proximate BES facilities owned and operated by other entities, over which the TO has no authority, operational control, or guaranteed data access.

Example:

Where a Generator Owner (GO) BES station is adjacent to a CIP-014 identified Transmission station, the Transmission Owner cannot compel participation in modeling or analysis from the GO. As written, Requirement R3 does not clearly define:

- Who is responsible for performing such simulations
- Which entity is accountable for audit evidence
- How compliance is achieved when the adjacent facility is outside the TO's control

These challenges are further exacerbated in cross-jurisdictional scenarios (e.g., Manitoba, New York, Michigan), where regulatory authority, planning roles, and data-sharing constraints differ.

Hydro One believes interconnection-level modeling of cascading, instability, and uncontrolled separation is more appropriately the responsibility of the **Reliability Coordinator (RC) and/or the Planning Coordinator (PC) / Transmission Planner (TP)** or should require an explicit transfer of responsibility from the Transmission Owner to these entities.

Absent clarification, Requirement R3 exposes TOs to compliance risk for activities they cannot directly perform or control.

General

Like other NERC standards, the use of **"past qualified studies"** should be allowed. Recommend writing this into the standard.

R3.2

The dynamic simulation test is performed first. Only stations or substations that meet the criteria in the dynamic simulation are then evaluated using the steady state simulation to determine CIP-014 applicability.

Propose the rewrite as follows:

"The dynamic simulation test is done first. For those stations or substations which pass criteria in the dynamic simulation test, the steady-state simulation test is to be used to determine CIP-14 applicability status." **R3.3.3** Requirement R3.3.3 calls for a documented justification of the credible high-severity physical attack and associated fault(s) to be simulated. Can you clarify the expected level of detail for this documentation, particularly with respect to what would be considered sufficient to meet auditor expectations for the R3 VSLs? Additionally, is the intent of R3.3.3 limited strictly to the selection of fault conditions, or are recovery considerations (e.g., restoration assumptions, reconfiguration capability, or time to recovery) expected to be included as part of the justification?"

Likes 0	
Dislikes 0	

Response
Thank you for your comments. The SAR did not allow for the drafting team to add additional responsible entities such as TPs and PCs. A new SAR will be required for this change. If a risk assessment identifies a transmission station or transmission substation as causing instability, uncontrolled separation, or Cascading within an Interconnection when rendered inoperable or damaged, then the TO can chose to forego future assessments for that substation, provided Requirements R7 through R10 continued to be adhered to. The TO has the choice of which order in which to perform the dynamic and steady-state simulations.

Timothy Singh - Timothy Singh On Behalf of: Israel Perez, Salt River Project, 6, 3, 5, 1; Jennifer Bennett, Salt River Project, 6, 3, 5, 1; Laura Somak, Salt River Project, 6, 3, 5, 1; Matthew Jaramilla, Salt River Project, 6, 3, 5, 1; - Timothy Singh	
Answer	No
Document Name	

Comment
SRP would like further clarification and specific guidance for R3. There is no mention of the type of threat or severity considered. Also no mention of whether both stations are disabled by a single event (bomb) or by multiple events in the same proximate area (shooter(s) or similar). This could lead to different utilities running completely different analyses on the proximate sites. Clarification is also needed to determine which entity is responsible for implementing R3. Although there are situations in which different utilities share or are proximate to each other, there may be an issue with the responsibility for sites brought in within the new 1500 ft perimeter. There is also clarification needed on whether a 3-phase bolted fault or a single-line-to-ground fault is required for the analysis.

Likes 0	
Dislikes 0	

Response

Thank you for your comments. The standard cannot reasonably be written to mandate the worst possible event. The DT recognized that physical attack scenarios of the highest severity could be conceived of that would be devasting and even well beyond affecting an Interconnection, but such scenarios would not be credible. The DT feels that the phrase "credible high-severity physical attack" effectively and reasonably manages this issue such that entities should feel compelled to run something that is high in electrical severity but still rooted in reality. Furthermore, the DT feels that requiring a documented justification for the type of Fault(s) simulated prevents any entity from simply adopting the least impactful scenario. R4 addresses your question around multiple entities having responsibilities for studies. The language in R3 around the Fault type is a compromise reached by the drafting team and industry between those who felt that a 3-phase fault was inappropriate as a generic mandate and those who felt that a single-phase fault was not sufficient.

Nathan Browder - Nathan Browder On Behalf of: Matt Lewis, Lower Colorado River Authority, 1, 5; - Nathan Browder

Answer	No
Document Name	

Comment

No. We do not agree with the proposed modifications specifically in section 3.3.3. The added language could lead to inconsistent interpretation of what constitutes a "credible" physical attack scenario and the amount of justification needed for a fault. LCRA believes that how a substation is taken out of service matters less than the result of a substation outage. Irrespective of the cause of the outage, the result is the substation is out of service. The proposed language appears to require entities to first develop physical attack scenarios before performing the study, which feels like doing a threat assessment twice.

Likes 0	
Dislikes 0	

Response

Thank you for your comments. The standard cannot reasonably be written to mandate the worst possible event. The DT recognized that physical attack scenarios of the highest severity could be conceived of that would be devasting and even well beyond affecting an Interconnection, but such scenarios would not be credible. The DT feels that the phrase "credible high-severity physical attack" effectively and reasonably manages this issue such that entities should feel compelled to run something that is high in electrical severity but still rooted in reality. Furthermore, the DT feels that requiring a documented justification for the type of Fault(s) simulated prevents any entity from simply adopting the least impactful scenario.

Nick Leathers - Nick Leathers On Behalf of: David Jendras Sr, Ameren - Ameren Services, 3, 6, 1; - Nick Leathers	
Answer	No
Document Name	
Comment	
Ameren would like more clarity around R3.3.1.2 and R3.3.2.1 regarding where and when the faults should be applied. (i.e. should all faults be applied at the same time to all buses at the transmission substation or station and proximate station or substation?)	
Likes 0	
Dislikes 0	
Response	
Thank you for your comments. All Faults should be part of the same event. The drafting team did not specify that the Fault(s) should be applied at the same time because some simulation software is not capable of simulating simultaneity. Also, depending on the event, a small amount of time might pass before the event affects the neighboring substation.	
Gail Elliott - Gail Elliott On Behalf of: Michael Moltane, International Transmission Company Holdings Corporation, 1; - Gail Elliott	
Answer	No
Document Name	
Comment	
For 3.1 ITC requests removal of requirement for technically justified thresholds and instead require only documented criteria for unacceptable generation and load loss within an interconnection. ITC recommends removal of 3.3.1.1 and 3.3.1.2 as a prior loss of communication and protection systems and then an application of a fault or faults isn't a realistic sequence. ITC believes 3.3.1.3 by itself sufficiently describes the intended scenario of using delayed (remote) clearing times unless otherwise technically substantiated.	
Likes 0	
Dislikes 0	
Response	

Thank you for your comments. If the thresholds cannot be technically justified, then a TO could arbitrarily choose them, or even manipulate the thresholds to affect the results of the assessment. The wording of 3.3.1.1 and 3.3.1.2 is to avoid a situation where a TO simulates the fault, uses normal clearing, and then assumes that communications failure.	
Jennifer Neville - Western Area Power Administration - 6	
Answer	No
Document Name	
Comment	
WAPA objects to the addition of “technically justified” to R3.1. WAPA suggests removing “technically justified”. If that is not acceptable, WAPA requests that the requirement be a documented rationale instead. The term “technically justified” is concerning. Who determines whether a threshold is “technically justified” for unacceptable generation and load loss within an entire Interconnection? The following suggested change is provided if simply striking “technically justified” isn’t acceptable: R3.1 Documented criteria for assessing instability, uncontrolled separation, or Cascading within an Interconnection. The criteria shall include, at a minimum, thresholds identifying unacceptable generation and load loss within an Interconnection. The rationale for these thresholds shall be available as supporting information. This aligns with a similar statement made in TPL-001-5.1 regarding supporting rationale.	
Likes 0	
Dislikes 0	
Response	
Thank you for your comments. If the thresholds are not technically justified, then a TO could arbitrarily choose them, or even manipulate the thresholds to affect the results of the assessment.	
Joseph Scott - Lower Colorado River Authority - 5	
Answer	No
Document Name	
Comment	

We do not agree with the proposed modifications specifically in section 3.3.3. The added language could lead to inconsistent interpretation of what constitutes a “credible” physical attack scenario and the amount of justification needed for a fault. LCRA believes that how a substation is taken out of service matters less than the result of a substation outage. Irrespective of the cause of the outage, the result is the substation is out of service. The proposed language appears to require entities to first develop physical attack scenarios before performing the study, which feels like doing a threat assessment twice.	
Likes 0	
Dislikes 0	
Response	
Thank you for your comments. The standard cannot reasonably be written to mandate the worst possible event. The DT recognized that physical attack scenarios of the highest severity could be conceived of that would be devasting and even well beyond affecting an Interconnection, but such scenarios would not be credible. The DT feels that the phrase “credible high-severity physical attack” effectively and reasonably manages this issue such that entities should feel compelled to run something that is high in electrical severity but still rooted in reality. Furthermore, the DT feels that requiring a documented justification for the type of Fault(s) simulated prevents any entity from simply adopting the least impactful scenario.	
John Pearson - ISO New England, Inc. - 2	
Answer	No
Document Name	
Comment	
Sub-requirements 3.3.1 and 3.3.2 should be clarified to indicate whether testing will be at the same time or separately, i.e., are these two parts of the same simulation or two separate simulations? Sub-requirement 3.3.3 should be replaced with language that simply applies a 3-phase fault.	
Likes 0	
Dislikes 0	
Response	
Thank you for your comments. All Faults should be part of the same event. The drafting team did not specify that the Fault(s) should be applied at the same time because some simulation software is not capable of simulating simultaneity. Also, depending on the event, a small amount of time might pass before the event affects the neighboring substation. . The language in R3 around the fault type is a compromise reached by the drafting team and industry	

between those who felt that a 3-phase fault was inappropriate as a generic mandate and those who felt that a single-phase fault was not sufficient. A TO is certainly free to use 3-phase faults with the justification that they are the most severe.	
Keihen Allen-Kitchen - Western Area Power Administration - 1	
Answer	No
Document Name	
Comment	
WAPA objects to the addition of “technically justified” to R3.1. WAPA suggests removing “technically justified”. If that is not acceptable, WAPA requests that the requirement be a documented rationale instead. The term “technically justified” is concerning. Who determines whether a threshold is “technically justified” for unacceptable generation and load loss within an entire Interconnection? The following suggested change is provided if simply striking “technically justified” isn’t acceptable: R3.1 Documented criteria for assessing instability, uncontrolled separation, or Cascading within an Interconnection. The criteria shall include, at a minimum, thresholds identifying unacceptable generation and load loss within an Interconnection. The rationale for these thresholds shall be available as supporting information. This aligns with a similar statement made in TPL-001-5.1 regarding supporting rationale.	
Likes 0	
Dislikes 0	
Response	
Thank you for your comments. Removing "technically justified" potentially allows the TO to adjust the criteria in a way that influences the results.	
Misty Carneal - Duke Energy - 1,3,5,6 - SERC,RF	
Answer	Yes
Document Name	
Comment	

Duke Energy supports the modifications.	
Likes 0	
Dislikes 0	
Response	
Thank you for your response.	
Tremayne Brown - ReliabilityFirst - 10	
Answer	Yes
Document Name	
Comment	
The Technical Rational Document provides added context. However, the RF team believes in order to address existing issues and the intent of the Standard, more clarity is needed in R3. R3.1 of the Requirement does not call out Steady State or Dynamic studies, while the Technical Rational lists parameters that can be used to evaluate the steady-state and/or dynamic analysis. It is recommended that the thresholds be identified for both Steady State and Dynamic, not and/or. It is recommended that this language should be in the Requirement, not just the Technical Rationale. For R3.3 (3.3.2.1/3.3.3.2) it requires a TO to provide what simulations were run, whereas, the RF team believes a TO's methodology should also include technical justification for which Fault or Faults were run. It is recommended that this language should be in the Requirement, not just the Technical Rationale.	
Likes 0	
Dislikes 0	
Response	
Thank you for your comments. The R3.1 standard language is intentionally general and thus should be taken to apply to steady-state and stability as necessary. The DT believes that technical justification can be in or out of the methodology, as long as it is documented somewhere.	
Ronald Hoover - Bonneville Power Administration - 1,3,5,6 - WECC	
Answer	Yes

Document Name	
Comment	
BPA Transmission Planning supports new Requirement R3, noting its alignment with our current risk assessment methodology and its value in detailing minimum risk assessment requirements for all Transmission Owners. However, we find the generation or load loss criteria regarding specific MW thresholds unclear. NERC should consider adding a net loss criterion or establishing quantitative default benchmarks. Additionally, "Fault" should be specified as a 3-phase Fault, as it is typically the most severe.	
Likes 0	
Dislikes 0	
Response	
Thank you for your comments. There were significant industry objections to explicitly mandating a 3-phase Fault in the standard. The existing language was accepted as a compromise so that TOs that felt it important to use a less extreme Fault could do so but with appropriate documented justification. Putting specific thresholds in the standard is difficult because the thresholds can change with changes in the system.	
Kelly Heims - Central Iowa Power Cooperative - 1	
Answer	Yes
Document Name	
Comment	
Central Iowa Power Cooperative supports the MRO's NERC Standards Review Forum (NSRF) and ACES comments for Question 3.	
Likes 0	
Dislikes 0	
Response	
Thank you for your comments.	
Amy Casuscelli - Xcel Energy, Inc. - 1,3,5,6 - MRO,WECC	
Answer	Yes
Document Name	

Comment	
Xcel Energy supports EEI comments	
Likes 0	
Dislikes 0	
Response	
Thank you for your comments.	
Rachel Schuldt - Black Hills Corporation - 6, Group Name Black Hills Corporation - All Segments	
Answer	Yes
Document Name	
Comment	
Black Hills Corporation agrees with the modifications for Requirement R3.	
Likes 0	
Dislikes 0	
Response	
Thank you for your comments.	
Daniel Valle - New York Power Authority - 1	
Answer	Yes
Document Name	
Comment	
NYPA supports the comments submitted by NPCC RSC.	
Likes 0	

Dislikes 0	
Response	
Thank you for your comments.	
Joseph Gatten - Great River Energy - 3, Group Name Great River Energy	
Answer	Yes
Document Name	
Comment	
No additional comment.	
Likes 0	
Dislikes 0	
Response	
Thank you.	
Matt Bullard - Dominion - Dominion Virginia Power - 3, Group Name Dominion Energy	
Answer	Yes
Document Name	
Comment	
DE agrees with the modifications, but DE has concerns protections or an exception may be needed where the TO is unable to get the required data from the proximate station or substation owner when performing the assessment in R5. Otherwise, results of the assessment in R5 would be speculative for the portion that addresses R3.3.2.	
Likes 0	
Dislikes 0	
Response	

Alan Kloster - Alan Kloster On Behalf of: Jeremy Harris, Evergy, 3, 5, 1, 6; Kevin Frick, Evergy, 3, 5, 1, 6; Marcus Moor, Evergy, 3, 5, 1, 6; Tiffany Lake, Evergy, 3, 5, 1, 6; - Alan Kloster	
Answer	Yes
Document Name	
Comment	
Evergy supports and incorporates by reference the comments of the Edison Electric Institute (EEI) for question #3.	
Likes 0	
Dislikes 0	
Response	
Thank you for your comments.	
Andrea Koch - Edison Electric Institute - NA - Not Applicable - NA - Not Applicable	
Answer	Yes
Document Name	
Comment	
EEI agrees with the modification made to Requirement R3. EEI proposes the following language modification to the final sentence of the Technical Rationale for Requirement R3, Part 3.3.1 that is more aligned with the language in Requirement R3 Subsection R3.3.1.3. “The use of delayed clearing times, **unless otherwise technically substantiated typically Zone 2**, is necessary because the applicable substation has lost local protection and all communications with other substations.”	
Likes 0	
Dislikes 0	
Response	
Thank you for your comments.	

Clay Walker - Clay Walker On Behalf of: Robert Hirchak, Cleco Corporation, 6, 5, 1, 3; - Clay Walker	
Answer	Yes
Document Name	
Comment	
Cleco agrees with EEI comments.	
Likes 0	
Dislikes 0	
Response	
Thank you for your comments.	
Hayk Zargaryan - Edison International - Southern California Edison Company - 1	
Answer	Yes
Document Name	
Comment	
See comments submitted by Edison Electric Institute.	
Likes 0	
Dislikes 0	
Response	
Thank you for your comments.	
Todd Garwick - Edison International - Southern California Edison Company - 3	
Answer	Yes
Document Name	
Comment	

See comments submitted by Edison Electric Institute	
Likes 0	
Dislikes 0	
Response	
Thank you for your comments.	
Jodi Yeary - AEP - 3	
Answer	Yes
Document Name	
Comment	
AEP notices that requirement R3.3 may be unclear and open-ended, creating potential audit risk, specifically regarding the definitions of "credible" or "high severity," which may be subject to inconsistent interpretations and deemed insufficient in an audit context. AEP will develop a justification document around our interpretation of these terms, but recognize that it may be subjective in nature AEP requests clarification around what constitutes "credible" and "high severity" scenarios in the Technical Rationale, while avoiding excessive scenario detail that could serve as a roadmap for malicious actors. AEP also requests clarification around the inclusion of the word *"prior"* from Part 3.3.1.1. The requirement should associate the loss of communications directly with the attack scenario being simulated, rather than requiring a prior loss associated with some undefined earlier scenario. Fault clearing times should be derived from the nature of the simulated scenario, associated fault, and the specific protection scheme applied to each Element at an applicable station. If the acceptable scenarios are to involve loss of communication, that should be explicitly stated. Loss of communication clearing times may be normal or delayed depending on the type of protection system applied to an Element.	
Likes 0	
Dislikes 0	
Response	

Thank you for your comments. The standard cannot reasonably be written to mandate the worst possible event. The DT recognized that physical attack scenarios of the highest severity could be conceived of that would be devasting and even well beyond affecting an Interconnection, but such scenarios would not be credible. The DT feels that the phrase “credible high-severity physical attack” effectively and reasonably manages this issue such that entities should feel compelled to run something that is high in electrical severity but still rooted in reality. Furthermore, the DT feels that requiring a documented justification for the type of Fault(s) simulated prevents any entity from simply adopting the least impactful scenario. The use of the word "prior" in the context of Part 3.3.1.1 is to prevent situations where the fault might be allowed to clear before the communications is removed.	
Lori Frisk - Lori Frisk On Behalf of: Hillary Creurer, Allete - Minnesota Power, Inc., 1; - Lori Frisk	
Answer	Yes
Document Name	
Comment	
Minesota Power supports EEI’s comments	
Likes 0	
Dislikes 0	
Response	
Thank you for your comments.	
Daniel Gacek - Exelon - 1, Group Name Exelon	
Answer	Yes
Document Name	
Comment	
Exelon agrees with the modifications made to Requirement R3. Exelon also supports the EEI suggested edit to the Technical Rationale as stated below: EEI proposes the following language modification to the final sentence of the Technical Rationale for Requirement R3, Part 3.3.1 that is more aligned with the language in Requirement R3 Subsection R3.3.1.3.	

“The use of delayed clearing times, **unless otherwise technically substantiated,** is necessary because the applicable substation has lost local protection and all communications with other substations.” Deleting the phrase "typically Zone 2" from the sentence above.	
Likes 0	
Dislikes 0	
Response	
Thank you for your comments.	
Stephanie Kenny - Edison International - Southern California Edison Company - 6	
Answer	Yes
Document Name	
Comment	
See EEI Comments	
Likes 0	
Dislikes 0	
Response	
Thank you for your comments.	
Dwanique Spiller - Berkshire Hathaway - NV Energy - 5	
Answer	Yes
Document Name	
Comment	
Likes 0	
Dislikes 0	

Response	
Donna Wood - Tri-State G and T Association, Inc. - 1	
Answer	Yes
Document Name	
Comment	
Likes 0	
Dislikes 0	
Response	
Jessica Cordero - Unisource - Tucson Electric Power Co. - 1	
Answer	Yes
Document Name	
Comment	
Likes 0	
Dislikes 0	
Response	
Amy Wilke - American Transmission Company, LLC - 1	
Answer	Yes
Document Name	
Comment	

Likes 0	
Dislikes 0	
Response	
Kevin Conway - Western Power Pool - 4	
Answer	Yes
Document Name	
Comment	
Likes 0	
Dislikes 0	
Response	
Rebika Yitna - Rebika Yitna On Behalf of: Roger Brand, MEAG Power, 3, 1; - Rebika Yitna	
Answer	Yes
Document Name	
Comment	
Likes 0	
Dislikes 0	
Response	
Matthew Nicklin - Southern Illinois Power Cooperative - 1,5 - SERC	

Answer	Yes
Document Name	
Comment	
Likes 0	
Dislikes 0	
Response	
Alyssia Rhoads - Public Utility District No. 1 of Snohomish County - 1	
Answer	Yes
Document Name	
Comment	
Likes 0	
Dislikes 0	
Response	
Wendy Kalidass - U.S. Bureau of Reclamation - 5	
Answer	Yes
Document Name	
Comment	
Likes 0	
Dislikes 0	

Response	
Karen Artola - CPS Energy - 1,3,5 - Texas RE	
Answer	Yes
Document Name	
Comment	
Likes 0	
Dislikes 0	
Response	
Anna Martinson - MRO - 1,2,3,4,5,6 - MRO, Group Name MRO Group	
Answer	Yes
Document Name	
Comment	
Likes 0	
Dislikes 0	
Response	
Stephen Stafford - Stephen Stafford On Behalf of: Greg Davis, Georgia Transmission Corporation, 1; - Stephen Stafford	
Answer	Yes
Document Name	
Comment	

Likes 0	
Dislikes 0	
Response	
Sarah Miller - FirstEnergy - FirstEnergy Corporation - 4, Group Name FE Voters	
Answer	Yes
Document Name	
Comment	
Likes 0	
Dislikes 0	
Response	
Katrina Lyons - Georgia System Operations Corporation - 4	
Answer	Yes
Document Name	
Comment	
Likes 0	
Dislikes 0	
Response	
TRACEY JOHNSON - Southern Indiana Gas and Electric Co. - 3,5,6 - RF	

Answer	Yes
Document Name	
Comment	
Likes 0	
Dislikes 0	
Response	
Zahid Qayyum - New York Power Authority - 5	
Answer	Yes
Document Name	
Comment	
Likes 0	
Dislikes 0	
Response	
Isidoro Behar - Long Island Power Authority - 1	
Answer	Yes
Document Name	
Comment	
Likes 0	
Dislikes 0	

Response	
Thomas Brinckman - CenterPoint Energy Houston Electric, LLC - 1 - Texas RE	
Answer	Yes
Document Name	
Comment	
Likes 0	
Dislikes 0	
Response	
Said Sidiqi - Tennessee Valley Authority - 1,3,5,6 - SERC	
Answer	Yes
Document Name	
Comment	
Likes 0	
Dislikes 0	
Response	
Jodirah Green - ACES Power Marketing - 1,3,4,5,6 - MRO,WECC,Texas RE,SERC,RF, Group Name ACES Collaborators	
Answer	Yes
Document Name	
Comment	

Likes 0	
Dislikes 0	
Response	
Naresh Latchman - Georgia System Operations Corporation - 3	
Answer	Yes
Document Name	
Comment	
Likes 0	
Dislikes 0	
Response	
Laura Brignola - Constellation - 6	
Answer	
Document Name	
Comment	
Not Applicable to Constellation.	
Likes 0	
Dislikes 0	
Response	
Thank you.	

Chantal Mazza - Chantal Mazza On Behalf of: Junji Yamaguchi, Hydro-Quebec (HQ), 1, 5; Nicolas Turcotte, Hydro-Quebec (HQ), 1, 5; - Chantal Mazza	
Answer	
Document Name	
Comment	

Hydro-Québec supports the following NPCC RSC comments: Please see previous comment that was submitted by NPCC RSC. NPCC RSC believes that only the Transmission Planner (TP) is able to answer R3 and not the TO.

Furthermore, in HQ's view, the technical efforts and resources required to develop the list of critical facilities in accordance with Requirement R3 are significant and are notcost-effectively justifiable when undertaken solely to satisfy the objectives of CIP-014.

As we have previously highlighted, system performance assessments that aim at determining critical elements of a system can only be conducted by an entity that possesses the knowledge of the behavior of the system as whole and can certainly not be performed by a TO alone. As such, the TP and/or PC are the best suited functional entities to determine the critical elements of the power system under their responsibility or jurisdiction. If, for any reason, an explicit transfer of responsibility from the TO to the TP and/or PC is not considered feasible, then the current resulting implicit transfer of burden from the TO to the TP and PC should, at a minimum, be formally acknowledged in writing in the standard. Hydro-Québec agrees that The TP and/or PC, should be required to provide a comprehensive methodology and uniform approach in determining the proper level of contingency applied to the system in their jurisdiction order to determine the CIP-014 applicable facilities list. However, the TP and/or PC **should be allowed to rely on technically qualifying past or related studies** for the purpose of establishing the resulting facilities identified for applicability. Hydro-Québec's vote in favor of this revision is dependent on this flexibility being explicitly stated as such in the standard.

Likes 0	
Dislikes 0	
Response	

Thank you for your comments. The SAR for CIP-014-4 did not allow the drafting team the flexibility to redefine applicability or to assign requirements to TPs or PCs. Making those changes will require a new SAR.

Joshua London - Eversource Energy - 1, Group Name Eversource	
Answer	
Document Name	

Comment
The requirement to document criteria identifying unacceptable generation and load loss “within an Interconnection” is unclear and open to interpretation. It is not clear whether this refers to entities that operate across multiple Interconnections, or whether it requires entities to define thresholds based on impacts to an entire Interconnection. If the latter, this could be interpreted as requiring individual TOs to assess or define Interconnection wide impact criteria, which is beyond their visibility and responsibility. To avoid inconsistent interpretation the drafting team should clarify the intent. If the requirement is meant to address impacts that can be assessed by the entity, the phrase “within an Interconnection” should be completely removed or revised to define the scope more precisely. If the intent is to assess Interconnection wide impacts, the DT should provide a maximum threshold of unacceptable generation and load loss so all TOs are aligned in implementation.

Likes 0	
Dislikes 0	

Response
Thank you for your response. The CIP-014 standard is intended to address events that could impact an Interconnection. The Technical Rationale proposes an approach that can be used to determine thresholds.

Dan Perry - TXNM Energy - 1,3,5 - WECC,Texas RE	
Answer	
Document Name	

Comment
TXNM Energy agrees with EEI submitted comments repeated below. EEI agrees with the modification made to Requirement R3. EEI proposes the following language modification to the final sentence of the Technical Rationale for Requirement R3, Part 3.3.1 that is more aligned with the language in Requirement R3 Subsection R3.3.1.3. “The use of delayed clearing times, **unless otherwise technically substantiated typically Zone 2**, is necessary because the applicable substation has lost local protection and all communications with other substations.”

Likes 0	

Dislikes 0	
Response	
Thank you for your comments.	
Kirsten Rowley - Midcontinent ISO, Inc. - 2, Group Name ISO/RTO Council (IRC) Standards Review Committee (SRC)	
Answer	
Document Name	
Comment	
Similar to the comment provided in response to Question 2, third-party verifications performed under Requirement R6 may not be sufficient to verify the communications proposed under Requirement R3 (specifically R3.3.1.1 regarding prior loss of communication and Protection Systems). Because unaffiliated third parties conducting R6 verifications must rely on the Transmission Owner to supply the necessary information, the intended checks and balances of the review are diminished. At best, information may be collected, but independently verifiable evidence may not be accessible. The IRC SRC recommends that the drafting team acknowledge this limitation in verifiability within the Technical Rationale. Note: AESO, ISO-NE, and SPP abstain from these comments.	
Likes 0	
Dislikes 0	
Response	
Thank you for your comments.	
Rachel Coyne - Texas Reliability Entity, Inc. - 10	
Answer	
Document Name	
Comment	
Texas RE recommends the following revisions (in bold):	

• 3.1 "…The criteria shall include, at a minimum, technically justified thresholds identifying generation and load loss **that could cause instability, uncontrolled separation, or cascading** within the interconnection." This specifies that unacceptable generation and load loss is loss that could cause instability, uncontrolled separation, or cascading effects. • 3.2 – revise "System peak Load case" to "System **on-Peak** Load case" to ensure consistency with the NERC-defined term. • 3.3.3.1 "Prior loss of communication **or** Protection Systems, **or both**;" This captures the loss of one or both of these components.	
Likes 0	
Dislikes 0	
Response	
Thank you for your comments. The drafting team will consider your suggestions.	
Ruida Shu - Northeast Power Coordinating Council - 10, Group Name NPCC RSC	
Answer	
Document Name	
Comment	
Please see previous comment that was submitted by NPCC RSC. NPCC RSC believes that only the Transmission Planner (TP) is able to answer R3 and not the TO.	
Likes 0	
Dislikes 0	
Response	
Thank you for your comments. The SAR did not allow the drafting team to assign responsibilities for R3 to the TP. Doing so will require a new SAR.	
Khang Le - Seminole Electric Cooperative, Inc. - 1	
Answer	
Document Name	
Comment	
See comment in Question 8	

Likes 0	
Dislikes 0	
Response	
Thank you for your comments.	
Lucinda Bradshaw - Lucinda Bradshaw On Behalf of: Byron Booker, Oncor Electric Delivery, 1; - Lucinda Bradshaw	
Answer	
Document Name	
Comment	
Oncor Electric Delivery Company LLC has no new comments on the most recent revisions shown in 2023-06-cip-014-4-redline-to-last-posted-03312026.docx. Instead, Oncor incorporates by reference here its previous comments submitted herein on November 5, 2024 and July 21, 2025.	
Likes 0	
Dislikes 0	
Response	
Thank you for your comments.	
Kennedy Meier - Electric Reliability Council of Texas, Inc. - 2	
Answer	
Document Name	
Comment	
ERCOT joins the comments submitted by the IRC SRC and adopts them as its own.	
Likes 0	
Dislikes 0	

Response
Thank you for your comments.

4. Do you agree with the modifications made in CIP-014-4 with new Requirement R4 to address the issues identified in the SAR? If you do not agree, please provide your recommendation and, if appropriate, technical or procedural justification.	
Constantin Chitescu - Ontario Power Generation Inc. - 5	
Answer	No
Document Name	
Comment	
OPG supports the following NPCC Regional Standards Committee's comments: "Based on the Technical Rationale, the addition of "BES Elements" points to the addition of "jointly owned" Transmission stations and Transmission substations in the Applicability section. However, the introduction of the term(s) "BES Elements" adds confusion by speaking to Elements instead of the applicable Transmission stations and Transmission substations."	
Likes 0	
Dislikes 0	
Response	
Thank you for your comment. The drafting team could find "BES Elements" reference you mentioned. You might have an old version of the Technical Rationale document.	
Ruida Shu - Northeast Power Coordinating Council - 10, Group Name NPCC RSC	
Answer	No
Document Name	
Comment	
Based on the Technical Rationale, the addition of "BES Elements" points to the addition of "jointly owned" Transmission stations and Transmission substations in the Applicability section. However, the introduction of the term(s) "BES Elements" adds confusion by speaking to Elements instead of the applicable Transmission stations and Transmission substations.	
Likes 0	

Dislikes 0	
Response	
Thank you for your comment. The drafting team could find “BES Elements” reference you mentioned. You might have an old version of the Technical Rationale document.	
Gail Elliott - Gail Elliott On Behalf of: Michael Moltane, International Transmission Company Holdings Corporation, 1; - Gail Elliott	
Answer	No
Document Name	
Comment	
ITC suggests the removal of or the following revision to Requirement R4: R4. Each Transmission Owner with applicable Transmission station(s) and Transmission substation(s) identified in Requirement R1 containing Bulk Electric System (BES) Elements greater than 200 kV or identified as part of an IROL or essential to meeting an NPIR owned by multiple Transmission Owners shall coordinate with each appropriate Transmission Owner(s) to determine and document their individual and joint responsibilities for documenting a risk assessment methodology under Requirement R3 and for performing any required risk assessments per Requirement R5. R4 is administrative requiring documentation for all joint stations. Many joint stations have existed for decades where the two entities have an understanding of who is responsible for what parts of compliance. When documentation is being required, many entities legal groups will feel a need to be involved making this both time consuming and costly.	
Likes 0	
Dislikes 0	
Response	
Thank you for your comments. This is part of the SAR work scope. Suggested removal or modification will not work.	
Timothy Singh - Timothy Singh On Behalf of: Israel Perez, Salt River Project, 6, 3, 5, 1; Jennifer Bennett, Salt River Project, 6, 3, 5, 1; Laura Somak, Salt River Project, 6, 3, 5, 1; Matthew Jaramilla, Salt River Project, 6, 3, 5, 1; - Timothy Singh	
Answer	No
Document Name	
Comment	

SRP disagrees with R4 and that Transmission Owners should be held accountable for submitting their respective documentation for their substations. The coordination effort may be difficult depending on the methodologies and scenarios, and it could affect the outcomes. R4 could also create a compliance risk, as utilities may be held responsible for the inaction or unresponsiveness of other utilities.	
Likes 0	
Dislikes 0	
Response	
Thank you for your comments. The Transmission Owner with applicable Transmission station(s) and Transmission substation(s) identified in Requirement R1 jointly owned by multiple Transmission Owners has responsibility to coordinate with other TOs who are joint owners.	
Chantal Mazza - Chantal Mazza On Behalf of: Junji Yamaguchi, Hydro-Quebec (HQ), 1, 5; Nicolas Turcotte, Hydro-Quebec (HQ), 1, 5; - Chantal Mazza	
Answer	No
Document Name	
Comment	
Based on the Technical Rationale, the addition of “BES Elements” points to the addition of “jointly owned” Transmission stations and Transmission substations in the Applicability section. However, the introduction of the term(s) “BES Elements” adds confusion by speaking to Elements instead of the applicable Transmission stations and Transmission substations.	
Likes 0	
Dislikes 0	
Response	
Thank you for your comment. The drafting team could find “BES Elements” reference you mentioned. You might have an old version of the Technical Rationale document.	
Daniel Valle - New York Power Authority - 1	
Answer	No
Document Name	
Comment	

NYPA supports the comments submitted by NPCC RSC. In addition, NYPA recommends adding the term “existing” to the R4 requirement language on the jointly owned substation. This clarification would limit the scope to “existing” jointly owned facility. Including future jointly owned substations could introduce practical challenges and lead to ambiguity in implementation.	
Likes 0	
Dislikes 0	
Response	
Thank you for your comment. The drafting team believes that this should include anything identified in Requirement R1.	
Zahid Qayyum - New York Power Authority - 5	
Answer	No
Document Name	
Comment	
NYPA recommends adding the term “existing” to the R4 requirement language on the jointly owned substation. This clarification would limit the scope to “existing” jointly owned facility. Including future jointly owned substations could introduce practical challenges and lead to ambiguity in implementation.	
Likes 0	
Dislikes 0	
Response	
Thank you for your comment. The drafting team believes that this should include anything identified in Requirement R1.	
Amy Casuscelli - Xcel Energy, Inc. - 1,3,5,6 - MRO,WECC	
Answer	No
Document Name	
Comment	
To clarify responsibilities related to jointy owned facilities, we recommend the modification below:	

Suggested Modification in bold text: **R4.** *Each Transmission Owner with applicable Transmission station(s) and Transmission substation(s) identified in Requirement R1 jointly owned by multiple Transmission Owners shall coordinate with each appropriate Transmission Owner(s) to determine and document their individual and joint responsibilities under* ***Requirement R2****, Requirement R3, and Requirement R5.* It doesn't serve any purpose for the joint owner not responsible for performing the analysis to also have to identify proximate subs to the joint facility. It should be part of the individual and joint responsibilities agreement under R4 as to who will do the proximate locating for the joint facility.	
Likes 0	
Dislikes 0	
Response	
Thank you for your comments. Requirement R4 only applies to the Transmission Owner with applicable Transmission station(s) and Transmission substation(s) identified in Requirement R1 jointly owned by multiple Transmission Owners. It does not apply to proximate BES stations.	
Tamarra Hardie - Public Utility District No. 1 of Chelan County - 6, Group Name CHPD	
Answer	No
Document Name	
Comment	
The current R4 language brings adjacent-stations considerations into the requirement without establishing any corresponding obligation for neighboring entities to participate. This creates uncertainty around how coordination is expected to occur and places entities in a position where their compliance may depend on the cooperation or responsiveness of others.	
Likes 0	
Dislikes 0	
Response	
Thank you for your comments. The Transmission Owner with applicable Transmission station(s) and Transmission substation(s) identified in Requirement R1 jointly owned by multiple Transmission Owners has responsibility to coordinate with other TOs who are joint owners, not just any neighboring entities.	
Jeffrey Streifling - NB Power Corporation - 1	
Answer	No

Document Name	
Comment	
Based on the Technical Rationale, the addition of “BES Elements” points to the addition of “jointly owned” Transmission stations and Transmission substations in the Applicability section. However, the introduction of the term(s) “BES Elements” adds confusion by speaking to Elements instead of the applicable Transmission stations and Transmission substations.	
Likes 0	
Dislikes 0	
Response	
Thank you for your comments. The DT reviewed the Technical Rationale document and did not find “BES Elements” referenced. You might have an old version of the Technical Rationale document.	
Ronald Hoover - Bonneville Power Administration - 1,3,5,6 - WECC	
Answer	No
Document Name	
Comment	
BPA Transmission Planning supports the new Requirement R4, recognizing its value in promoting collaborative assessments of joint substations using a shared methodology. However, the current wording poses considerable coordination challenges and presumes a degree of inter-entity collaboration, scheduling, and methodological consistency that may be impractical. Furthermore, it creates a compliance risk for individual entities, making them reliant on the actions and responsiveness of others.	
Likes 0	
Dislikes 0	
Response	
Thank you for your comments and support. RSAW will be posted soon to provide guidance on compliance.	
Stephanie Kenny - Edison International - Southern California Edison Company - 6	
Answer	Yes

Document Name	
Comment	
See EEI Comments	
Likes 0	
Dislikes 0	
Response	
Thank you for your support.	
Daniel Gacek - Exelon - 1, Group Name Exelon	
Answer	Yes
Document Name	
Comment	
Exelon agrees with the modifications to Requirement R4.	
Likes 0	
Dislikes 0	
Response	
Thank you for your support.	
Naresh Latchman - Georgia System Operations Corporation - 3	
Answer	Yes
Document Name	
Comment	

The requirement is appropriate in the context that the referenced risk assessment is from a physical security perspective and not a transmission planning analysis perspective. Should the intent of this comment be applicable to physical security and not a transmission planning analysis, then our answer would be yes.	
Likes 0	
Dislikes 0	
Response	
Thank you for your support. The DT believes that this should be TO's responsibility.	
Todd Garwick - Edison International - Southern California Edison Company - 3	
Answer	Yes
Document Name	
Comment	
See comments submitted by Edison Electric Institute	
Likes 0	
Dislikes 0	
Response	
Thank you for your support.	
Hayk Zargaryan - Edison International - Southern California Edison Company - 1	
Answer	Yes
Document Name	
Comment	
See comments submitted by Edison Electric Institute.	
Likes 0	

Dislikes 0	
Response	
Thank you for your support.	
Rachel Coyne - Texas Reliability Entity, Inc. - 10	
Answer	Yes
Document Name	
Comment	
Texas RE noticed that control center is not capitalized throughout the standard. Texas RE recommends capitalizing the term since it is defined in the NERC Glossary.	
Likes 0	
Dislikes 0	
Response	
Thank you for your support. The drafting team intended to use the lower case for control center.	
Jodirah Green - ACES Power Marketing - 1,3,4,5,6 - MRO,WECC,Texas RE,SERC,RF, Group Name ACES Collaborators	
Answer	Yes
Document Name	
Comment	
We agree with the way the new requirement reads, but feel R4 and R5 could be renumbered so the standard would be linear.	
Likes 0	
Dislikes 0	
Response	
Thank you for your comments and support.	
Clay Walker - Clay Walker On Behalf of: Robert Hirchak, Cleco Corporation, 6, 5, 1, 3; - Clay Walker	

Answer	Yes
Document Name	
Comment	
Cleco agrees with EEI comments.	
Likes 0	
Dislikes 0	
Response	
Thank you for your support.	
Kirsten Rowley - Midcontinent ISO, Inc. - 2, Group Name ISO/RTO Council (IRC) Standards Review Committee (SRC)	
Answer	Yes
Document Name	
Comment	
No comment.	
Likes 0	
Dislikes 0	
Response	
Thank you for your support.	
Andrea Koch - Edison Electric Institute - NA - Not Applicable - NA - Not Applicable	
Answer	Yes
Document Name	
Comment	

EEI agrees with the modifications for Requirement R4.	
Likes 0	
Dislikes 0	
Response	
Thank you for your support.	
Dan Perry - TXNM Energy - 1,3,5 - WECC,Texas RE	
Answer	Yes
Document Name	
Comment	
Likes 0	
Dislikes 0	
Response	
Thank you for your support.	
Alan Kloster - Alan Kloster On Behalf of: Jeremy Harris, Evergy, 3, 5, 1, 6; Kevin Frick, Evergy, 3, 5, 1, 6; Marcus Moor, Evergy, 3, 5, 1, 6; Tiffany Lake, Evergy, 3, 5, 1, 6; - Alan Kloster	
Answer	Yes
Document Name	
Comment	
Evergy supports and incorporates by reference the comments of the MRO NSRF for question #4.	
Likes 0	

Dislikes 0	
Response	
Thank you for your support. Please see responses to the comments of the MRO NSRF for question #4.	
Joseph Gatten - Great River Energy - 3, Group Name Great River Energy	
Answer	Yes
Document Name	
Comment	
No additional comment.	
Likes 0	
Dislikes 0	
Response	
Thank you for your support.	
Isidoro Behar - Long Island Power Authority - 1	
Answer	Yes
Document Name	
Comment	
Req #4 specifically addresses facilities (BES Elements) with joint ownership to coordinate/collaborate. One improvement would be to include Transmission Owners whose stations have been identified as part of Req #2 to also be included in this requirement to coordinate. The ownership of the applicable and proximate stations may be different, and thus we feel the concept of coordination with respect to Req #2 should apply.	
Likes 0	
Dislikes 0	
Response	

Thank you for your comment. Requirement R4 only applies to applicable Transmission station(s) and Transmission substation(s) identified in Requirement R1 jointly owned by multiple Transmission Owners, not proximate stations.	
Rachel Schuldt - Black Hills Corporation - 6, Group Name Black Hills Corporation - All Segments	
Answer	Yes
Document Name	
Comment	
Black Hills Corporation agrees with the modifications for Requirement R4.	
Likes 0	
Dislikes 0	
Response	
Thank you for your support.	
Katrina Lyons - Georgia System Operations Corporation - 4	
Answer	Yes
Document Name	
Comment	
The requirement is appropriate in the context that the referenced risk assessment is from a physical security perspective and not a transmission planning analysis perspective. Should the intent of this comment be applicable to physical security and not a transmission planning analysis, then our answer would be yes	
Likes 0	
Dislikes 0	
Response	
Thank you for your comment. The drafting team discussed this and believe that this is Transmission Owner's responsibility.	
Kelly Heims - Central Iowa Power Cooperative - 1	

Answer	Yes
Document Name	
Comment	
Central Iowa Power Cooperative supports the MRO's NERC Standards Review Forum (NSRF) and ACES comments for Question 4.	
Likes 0	
Dislikes 0	
Response	
Thank you for your comment. Please see responses to the MRO's NERC Standards Review Forum (NSRF) and ACES comments for Question 4.	
Anna Martinson - MRO - 1,2,3,4,5,6 - MRO, Group Name MRO Group	
Answer	Yes
Document Name	
Comment	
The MRO NSRF requests that the drafting team consider adding guidance to the measures or technical rational on how to show compliance if no joint owners are identified.	
Likes 0	
Dislikes 0	
Response	
Thank you for your comment and support. RSAW will be posted to provide guidance for compliance.	
Matthew Nicklin - Southern Illinois Power Cooperative - 1,5 - SERC	
Answer	Yes
Document Name	

Comment	
We agree with the way the new requirement reads, but feel R4 and R5 could be renumbered so the standard would be linear.	
Likes 0	
Dislikes 0	
Response	
Thank you for your comment and support.	
Misty Carneal - Duke Energy - 1,3,5,6 - SERC,RF	
Answer	Yes
Document Name	
Comment	
Duke Energy supports the modifications.	
Likes 0	
Dislikes 0	
Response	
Thank you for your support.	
Kennedy Meier - Electric Reliability Council of Texas, Inc. - 2	
Answer	Yes
Document Name	
Comment	
Likes 0	
Dislikes 0	

Response	
Thank you for your support.	
John Pearson - ISO New England, Inc. - 2	
Answer	Yes
Document Name	
Comment	
Likes 0	
Dislikes 0	
Response	
Thank you for your support.	
Lori Frisk - Lori Frisk On Behalf of: Hillary Creurer, Allete - Minnesota Power, Inc., 1; - Lori Frisk	
Answer	Yes
Document Name	
Comment	
Likes 0	
Dislikes 0	
Response	
Thank you for your support.	
Jodi Yeary - AEP - 3	
Answer	Yes
Document Name	
Comment	

Likes 0	
Dislikes 0	
Response	
Thank you for your support.	
Joseph Scott - Lower Colorado River Authority - 5	
Answer	Yes
Document Name	
Comment	
Likes 0	
Dislikes 0	
Response	
Thank you for your support.	
Jennifer Neville - Western Area Power Administration - 6	
Answer	Yes
Document Name	
Comment	
Likes 0	
Dislikes 0	
Response	
Thank you for your support.	
Nick Leathers - Nick Leathers On Behalf of: David Jendras Sr, Ameren - Ameren Services, 3, 6, 1; - Nick Leathers	

Answer	Yes
Document Name	
Comment	
Likes 0	
Dislikes 0	
Response	
Thank you for your support.	
Carver Powers - Utility Services, Inc. - 4	
Answer	Yes
Document Name	
Comment	
Likes 0	
Dislikes 0	
Response	
Thank you for your support.	
Nathan Browder - Nathan Browder On Behalf of: Matt Lewis, Lower Colorado River Authority, 1, 5; - Nathan Browder	
Answer	Yes
Document Name	
Comment	
Likes 0	
Dislikes 0	

Response	
Thank you for your support.	
Said Sidiqi - Tennessee Valley Authority - 1,3,5,6 - SERC	
Answer	Yes
Document Name	
Comment	
Likes 0	
Dislikes 0	
Response	
Thank you for your support.	
Oshara Narangoda - Oshara Narangoda On Behalf of: Aditya Menon, Hydro One Networks, Inc., 1; - Oshara Narangoda	
Answer	Yes
Document Name	
Comment	
Likes 0	
Dislikes 0	
Response	
Thank you for your support.	
Matt Bullard - Dominion - Dominion Virginia Power - 3, Group Name Dominion Energy	
Answer	Yes
Document Name	
Comment	

Likes 0	
Dislikes 0	
Response	
Thank you for your support.	
Thomas Brinckman - CenterPoint Energy Houston Electric, LLC - 1 - Texas RE	
Answer	Yes
Document Name	
Comment	
Likes 0	
Dislikes 0	
Response	
Thank you for your support.	
Randy Peters - Manitoba Hydro - 1,3,5,6 - MRO	
Answer	Yes
Document Name	
Comment	
Likes 0	
Dislikes 0	
Response	
Thank you for your support.	
Joshua London - Eversource Energy - 1, Group Name Eversource	

Answer	Yes
Document Name	
Comment	
Likes 0	
Dislikes 0	
Response	
Thank you for your support.	
TRACEY JOHNSON - Southern Indiana Gas and Electric Co. - 3,5,6 - RF	
Answer	Yes
Document Name	
Comment	
Likes 0	
Dislikes 0	
Response	
Thank you for your support.	
Jennifer Wright - Sempra - San Diego Gas and Electric - 5	
Answer	Yes
Document Name	
Comment	
Likes 0	
Dislikes 0	

Response	
Thank you for your support.	
Sarah Miller - FirstEnergy - FirstEnergy Corporation - 4, Group Name FE Voters	
Answer	Yes
Document Name	
Comment	
Likes 0	
Dislikes 0	
Response	
Thank you for your support.	
Bob Cardle - Bob Cardle On Behalf of: Marco Rios, Pacific Gas and Electric Company, 3, 1, 5; Sandra Ellis, Pacific Gas and Electric Company, 3, 1, 5; Tyler Brun, Pacific Gas and Electric Company, 3, 1, 5; - Bob Cardle	
Answer	Yes
Document Name	
Comment	
Likes 0	
Dislikes 0	
Response	
Thank you for your support.	
Tasha Ward - Midwest Reliability Organization - 10	
Answer	Yes
Document Name	
Comment	

Likes 0	
Dislikes 0	
Response	
Thank you for your support.	
Stephen Stafford - Stephen Stafford On Behalf of: Greg Davis, Georgia Transmission Corporation, 1; - Stephen Stafford	
Answer	Yes
Document Name	
Comment	
Likes 0	
Dislikes 0	
Response	
Thank you for your support.	
Karen Artola - CPS Energy - 1,3,5 - Texas RE	
Answer	Yes
Document Name	
Comment	
Likes 0	
Dislikes 0	
Response	
Thank you for your support.	
Alison Nickells - NiSource - Northern Indiana Public Service Co. - 1	

Answer	Yes
Document Name	
Comment	
Likes 0	
Dislikes 0	
Response	
Thank you for your support.	
Wendy Kalidass - U.S. Bureau of Reclamation - 5	
Answer	Yes
Document Name	
Comment	
Likes 0	
Dislikes 0	
Response	
Thank you for your support.	
Alyssia Rhoads - Public Utility District No. 1 of Snohomish County - 1	
Answer	Yes
Document Name	
Comment	
Likes 0	
Dislikes 0	

Response	
Thank you for your support.	
Rebika Yitna - Rebika Yitna On Behalf of: Roger Brand, MEAG Power, 3, 1; - Rebika Yitna	
Answer	Yes
Document Name	
Comment	
Likes 0	
Dislikes 0	
Response	
Thank you for your support.	
Tremayne Brown - ReliabilityFirst - 10	
Answer	Yes
Document Name	
Comment	
Likes 0	
Dislikes 0	
Response	
Thank you for your support.	
Kevin Conway - Western Power Pool - 4	
Answer	Yes
Document Name	
Comment	

Likes 0	
Dislikes 0	
Response	
Thank you for your support.	
Amy Wilke - American Transmission Company, LLC - 1	
Answer	Yes
Document Name	
Comment	
Likes 0	
Dislikes 0	
Response	
Thank you for your support.	
Jessica Cordero - Unisource - Tucson Electric Power Co. - 1	
Answer	Yes
Document Name	
Comment	
Likes 0	
Dislikes 0	
Response	
Thank you for your support.	
Donna Wood - Tri-State G and T Association, Inc. - 1	

Answer	Yes
Document Name	
Comment	
Likes 0	
Dislikes 0	
Response	
Thank you for your support.	
Dwanique Spiller - Berkshire Hathaway - NV Energy - 5	
Answer	Yes
Document Name	
Comment	
Likes 0	
Dislikes 0	
Response	
Thank you for your support.	
Lucinda Bradshaw - Lucinda Bradshaw On Behalf of: Byron Booker, Oncor Electric Delivery, 1; - Lucinda Bradshaw	
Answer	
Document Name	
Comment	
Oncor Electric Delivery Company LLC has no new comments on the most recent revisions shown in 2023-06-cip-014-4-redline-to-last-posted-03312026.docx. Instead, Oncor incorporates by reference here its previous comments submitted herein on November 5, 2024 and July 21, 2025.	
Likes 0	

Dislikes 0	
Response	
Thank you for you support. Please see responses to previous comments submitted on November 5, 2024 and July 21, 2025.	
Khang Le - Seminole Electric Cooperative, Inc. - 1	
Answer	
Document Name	
Comment	
See comment in Question 8	
Likes 0	
Dislikes 0	
Response	
Thank you for your comment. Please see responses to question 8.	
Laura Brignola - Constellation - 6	
Answer	
Document Name	
Comment	
Not Applicable to Constellation.	
Likes 0	
Dislikes 0	
Response	
Thank you for you support.	

5. Do you agree with the modifications made in CIP-014-4 with adding Requirement R5 to address the issues identified in the SAR? If you do not agree, please provide your recommendation and, if appropriate, technical or procedural justification.	
Alyssia Rhoads - Public Utility District No. 1 of Snohomish County - 1	
Answer	No
Document Name	
Comment	
SNPD strongly disagrees with adopting a 36-month risk assessment interval for utilities that have not previously identified any Transmission stations or substations as critical. This change would increase study costs without providing a meaningful improvement to the reliability of the Bulk Electric System (BES). Instead, SNPD recommends retaining the existing 60-month assessment interval for Transmission Owners (TOs) that have not identified any applicable critical facilities. This approach should continue to include Transmission stations and substations that are planned to be placed in service within the next 60 calendar months. For these utilities, reducing the assessment interval from 60 months to 36 months would result in unnecessary cost increases due to more frequent studies. Given their historical results, these additional assessments are unlikely to identify any new facilities that would qualify as CIP-014 critical beyond those already identified under CIP-014-3. As such, the proposed change offers little to no reliability benefit to the BES.	
Likes 0	
Dislikes 0	
Response	
Thank you for your comments. A directive of the SAR was to “correct any discrepancies between the study period, frequency of study, and the base case{s} a Transmission Owner uses.” The Drafting Team chose a timeframe that balanced the directive of the SAR and the comments from industry to make the timeframe either shorter or longer than 36 months.	
Jeffrey Streifling - NB Power Corporation - 1	
Answer	No

Document Name	
Comment	
R5. Clarify if at the end of the 36-month period the entity must have the Risk Assessment started or completed? TFIST suggest splitting the operational assessment and security assessment into distinct assessments in the timeline to reduce confusion and not just referred to as the “risk assessment”. In the last sentence of R5, “they should also be included in the risk assessment” TFIST questions if this makes the proximate Transmission station(s) and Transmission substation(s) optional in the risk assessment?	
Likes 0	
Dislikes 0	
Response	
Thank you for your comments. At the end of the 36-month period the entity must have the Risk Assessment completed. The Drafting Team believes the current language provides an appropriate framework for completing the required assessment activities. The Drafting Team does not believe further clarification is needed. The last sentence of R5 is: “If proximate Bulk Electric System Transmission station(s) and Bulk Electric System Transmission substation(s) were identified in Requirement R2, they shall be included in the risk assessment according to Requirement R3, Part 3.3.” This is not optional.	
Zahid Qayyum - New York Power Authority - 5	
Answer	No
Document Name	
Comment	
NYPA believes it would be better to clarify the 36-calendar month requirement in R5 applies at the initiation or at the completion of the risk assessment. As currently written, the requirement could be interpreted either way, which may lead to inconsistent implementation and would help clarify confusion especially during the transition to the new standard. NYPA believes the SDT may consider separating the operational assessment and security assessment into distinct assessments within the timeline, rather than collectively referring them as “risk assessment” to further improve clarity and reduce ambiguity”	

Likes 0	
Dislikes 0	
Response	
Thank you for your comments. At the end of the 36-month period the entity must have the Risk Assessment completed. The Drafting Team believes the current language provides an appropriate framework for completing the required assessment activities. The Drafting Team does not believe further clarification is needed.	
Daniel Valle - New York Power Authority - 1	
Answer	No
Document Name	
Comment	
NYPA supports the comments submitted by NPCC RSC. In addition, NYPA believes it would be better to clarify the 36-calendar month requirement in R5 applies at the initiation or at the completion of the risk assessment. As currently written, the requirement could be interpreted either way, which may lead to inconsistent implementation and would help clarify confusion especially during the transition to the new standard. NYPA believes the SDT may consider separating the operational assessment and security assessment into distinct assessments within the timeline, rather than collectively referring them as “risk assessment” to further improve clarity and reduce ambiguity”	
Likes 0	
Dislikes 0	
Response	
Thank you for your comments. At the end of the 36-month period the entity must have the Risk Assessment completed. The Drafting Team believes the current language provides an appropriate framework for completing the required assessment activities. The Drafting Team does not believe further clarification is needed.	
Isidoro Behar - Long Island Power Authority - 1	
Answer	No

Document Name	
Comment	
Please clarify whether, at the end of the 36-month period, the entity is required to have initiated or completed the Risk Assessment. We recommend separating the operational assessment and security assessment into distinct components within the timeline to reduce confusion, rather than referring to both collectively as the “risk assessment.”	
Likes 0	
Dislikes 0	
Response	
Thank you for your comments. At the end of the 36-month period the entity must have the Risk Assessment completed. The Drafting Team believes the current language provides an appropriate framework for completing the required assessment activities. The Drafting Team does not believe further clarification is needed.	
Chantal Mazza - Chantal Mazza On Behalf of: Junji Yamaguchi, Hydro-Quebec (HQ), 1, 5; Nicolas Turcotte, Hydro-Quebec (HQ), 1, 5; - Chantal Mazza	
Answer	No
Document Name	
Comment	
R5. Clarify if at the end of the 36-month period the entity must have the Risk Assessment started or completed? TFIST suggest splitting the operational assessment and security assessment into distinct assessments in the timeline to reduce confusion and not just referred to as the “risk assessment”. In the last sentence of R5, “they should also be included in the risk assessment” TFIST questions if this makes the proximate Transmission station(s) and Transmission substation(s) optional in the risk assessment?	
Likes 0	
Dislikes 0	
Response	
Thank you for your comments. At the end of the 36-month period the entity must have the Risk Assessment completed.	

The Drafting Team believes the current language provides an appropriate framework for completing the required assessment activities. The Drafting Team does not believe further clarification is needed. The last sentence of R5 is: “If proximate Bulk Electric System Transmission station(s) and Bulk Electric System Transmission substation(s) were identified in Requirement R2, they shall be included in the risk assessment according to Requirement R3, Part 3.3.” This is not optional.	
Timothy Singh - Timothy Singh On Behalf of: Israel Perez, Salt River Project, 6, 3, 5, 1; Jennifer Bennett, Salt River Project, 6, 3, 5, 1; Laura Somak, Salt River Project, 6, 3, 5, 1; Matthew Jaramilla, Salt River Project, 6, 3, 5, 1; - Timothy Singh	
Answer	No
Document Name	
Comment	
SRP sees the need for better oversight, or at least better clarification of the responsible entity. Clarity of accountability is needed, as the proximate substation TO may not know they need to be in compliance with the standard.	
Likes 0	
Dislikes 0	
Response	
Thank you for the comments. The Drafting Team believes the current language provides sufficient clarity.	
Gail Elliott - Gail Elliott On Behalf of: Michael Moltane, International Transmission Company Holdings Corporation, 1; - Gail Elliott	
Answer	No
Document Name	
Comment	
For 5.1, failure to perform the entirety of the risk assessment could have an TO not completing either the stability or steady state portion of the study. If the third party reviewer identified a mistake in the piece of the study that was completed, they have nothing to verify for the second half of the study as	

it was not performed. Changes to the system which add resiliency to the system may have changed a previous critical station to a non-critical station. Not studying it going forward means that the costs would continue to be incurred for protecting a station that does not require it. ITC recommends removing 5.2 as this is not language conducive to a standard requirement.	
Likes 0	
Dislikes 0	
Response	
Thank you for your comments. The Drafting Team believes Requirement R5, Part 5.2 provides appropriate flexibility and remains appropriate for the standard. Part 5.2 does not prevent a Transmission Owner from performing a new risk assessment when warranted.	
Ruida Shu - Northeast Power Coordinating Council - 10, Group Name NPCC RSC	
Answer	No
Document Name	
Comment	
R5. Clarify if at the end of the 36-month period the entity must have the Risk Assessment started or completed? TFIST suggest splitting the operational assessment and security assessment into distinct assessments in the timeline to reduce confusion and not just referred to as the “risk assessment”. In the last sentence of R5, “they should also be included in the risk assessment” TFIST questions if this makes the proximate Transmission station(s) and Transmission substation(s) optional in the risk assessment?	
Likes 0	
Dislikes 0	
Response	
Thank you for your comments. At the end of the 36-month period the entity must have the Risk Assessment completed. The Drafting Team believes the current language provides an appropriate framework for completing the required assessment activities. The Drafting Team does not believe further clarification is needed.	

The last sentence of R5 is: “If proximate Bulk Electric System Transmission station(s) and Bulk Electric System Transmission substation(s) were identified in Requirement R2, they shall be included in the risk assessment according to Requirement R3, Part 3.3.” This is not optional.	
Constantin Chitescu - Ontario Power Generation Inc. - 5	
Answer	No
Document Name	
Comment	
OPG supports the following NPCC Regional Standards Committee’s comments: "R5. Clarify if at the end of the 36-month period the entity must have the Risk Assessment started or completed? TFIST suggest splitting the operational assessment and security assessment into distinct assessments in the timeline to reduce confusion and not just referred to as the “risk assessment”. In the last sentence of R5, “they should also be included in the risk assessment” TFIST questions if this makes the proximate Transmission station(s) and Transmission substation(s) optional in the risk assessment?"	
Likes 0	
Dislikes 0	
Response	
Thank you for your comments. Please see response to NPCC’s comments.	
Misty Carneal - Duke Energy - 1,3,5,6 - SERC,RF	
Answer	Yes
Document Name	
Comment	
Duke Energy supports the modifications.	
Likes 0	
Dislikes 0	

Response	
Thank you for your support.	
Anna Martinson - MRO - 1,2,3,4,5,6 - MRO, Group Name MRO Group	
Answer	Yes
Document Name	
Comment	
The NSRF notes that the purpose statement in the standard was revised from "could **cause** instability" to "could **result in** instability." This change was reflected in R5, but parts R5.1, R5.2, and R5.3 still have the previous wording "as causing instability" instead of "resulting in instability." This change is recommended for consistency. The NSRF believes this to be a non-substantive change.	
Likes 0	
Dislikes 0	
Response	
Thank you for your comments. The Drafting Team believes the current language in Requirement R5 is clear and consistent with the purpose of the standard. The Drafting Team does not believe further clarification is needed.	
Kelly Heims - Central Iowa Power Cooperative - 1	
Answer	Yes
Document Name	
Comment	
Central Iowa Power Cooperative supports the MRO's NERC Standards Review Forum (NSRF) and ACES comments for Question 5.	
Likes 0	
Dislikes 0	
Response	
Thank you for your comments. Please see the response to the NSRF and ACES comments.	

Stephen Stafford - Stephen Stafford On Behalf of: Greg Davis, Georgia Transmission Corporation, 1; - Stephen Stafford	
Answer	Yes
Document Name	
Comment	
There is no issue with performing a risk assessment every 36 months. However, Transmission Owners are not the appropriate registered entity to conduct planning analyses. Nor are the CIP standards the appropriate place to document planning analysis requirements. Planning studies should be governed within the TPL group of standards.	
Likes 0	
Dislikes 0	
Response	
Thank you for your comments. The Drafting Team believes the required analysis is within the SAR work scope and is necessary to determine applicability under the standard.	
Tamarra Hardie - Public Utility District No. 1 of Chelan County - 6, Group Name CHPD	
Answer	Yes
Document Name	
Comment	
Recommend clarifying R5.3. As written, it is unclear whether the requirement applies only to the applicable entity's control center or also to a neighboring entity's control center that could contribute to instability, uncontrolled separation, or Cascading. If neighboring facilities must be identified, there is a risk they may not be notified, as no requirement currently exists to inform adjacent entities of their inclusion in a CIP-014 assessment. Clearer language would help ensure consistent expectations and appropriate coordination.	
Likes 0	
Dislikes 0	
Response	

Thank you for your comments. The Drafting Team believes requirement R5, Part 5.3 provides sufficient clarity regarding identification of the primary control center. The drafting team does not leave additional revisions to requirement R5 are necessary.	
Katrina Lyons - Georgia System Operations Corporation - 4	
Answer	Yes
Document Name	
Comment	
There is no issue with performing a risk assessment every 36 months. However, Transmission Owners are not the appropriate registered entity to conduct planning analyses. Nor are the CIP standards the appropriate place to document planning analysis requirements. Planning studies should be governed within the TPL group of standards.	
Likes 0	
Dislikes 0	
Response	
Thank you for your comments. The Drafting Team believes the required analysis is within the SAR work scope and is necessary to determine applicability under the standard.	
Rachel Schuldt - Black Hills Corporation - 6, Group Name Black Hills Corporation - All Segments	
Answer	Yes
Document Name	
Comment	
Black Hills Corporation agrees with the modifications for Requirement R5.	
Likes 0	
Dislikes 0	
Response	
Thank you for your support.	

Joseph Gatten - Great River Energy - 3, Group Name Great River Energy	
Answer	Yes
Document Name	
Comment	
No additional comment.	
Likes 0	
Dislikes 0	
Response	
Thank you for your feedback.	
Matt Bullard - Dominion - Dominion Virginia Power - 3, Group Name Dominion Energy	
Answer	Yes
Document Name	
Comment	
DE agrees with the modifications but DE has concerns as identified in response to question 3.	
Likes 0	
Dislikes 0	
Response	
Thank you for your support. Please see the response to your comments on Question 3.	
Alan Kloster - Alan Kloster On Behalf of: Jeremy Harris, Evergy, 3, 5, 1, 6; Kevin Frick, Evergy, 3, 5, 1, 6; Marcus Moor, Evergy, 3, 5, 1, 6; Tiffany Lake, Evergy, 3, 5, 1, 6; - Alan Kloster	
Answer	Yes
Document Name	
Comment	

Evergy supports and incorporates by reference the comments of the MRO NSRF for question #5.	
Likes 0	
Dislikes 0	
Response	
Thank you for your comments. Please see response to the comments of the MRO NSRF for question #5.	
Andrea Koch - Edison Electric Institute - NA - Not Applicable - NA - Not Applicable	
Answer	Yes
Document Name	
Comment	
EEI agrees with the modifications for Requirement R5.	
Likes 0	
Dislikes 0	
Response	
Thank you for your support.	
Kirsten Rowley - Midcontinent ISO, Inc. - 2, Group Name ISO/RTO Council (IRC) Standards Review Committee (SRC)	
Answer	Yes
Document Name	
Comment	
No comment.	
Likes 0	
Dislikes 0	

Response	
Thank you for your feedback.	
Clay Walker - Clay Walker On Behalf of: Robert Hirchak, Cleco Corporation, 6, 5, 1, 3; - Clay Walker	
Answer	Yes
Document Name	
Comment	
Cleco agrees with EEI comments.	
Likes 0	
Dislikes 0	
Response	
Thank you for your support.	
Hayk Zargaryan - Edison International - Southern California Edison Company - 1	
Answer	Yes
Document Name	
Comment	
See comments submitted by Edison Electric Institute.	
Likes 0	
Dislikes 0	
Response	
Thank you for your comment. Please see response to comments submitted by EEI.	
Todd Garwick - Edison International - Southern California Edison Company - 3	
Answer	Yes

Document Name	
Comment	
See comments submitted by Edison Electric Institute	
Likes 0	
Dislikes 0	
Response	
Thank you for your comment. Please see response to comment submitted by EEI.	
Naresh Latchman - Georgia System Operations Corporation - 3	
Answer	Yes
Document Name	
Comment	
There is no issue with performing a risk assessment every 36 months. However, Transmission Owners are not the appropriate registered entity to conduct planning analyses. Nor are the CIP standards the appropriate place to document planning analysis requirements. Planning studies should be governed within the TPL group of standards.	
Likes 0	
Dislikes 0	
Response	
Thank you for your comments. The Drafting Team believes the required analysis is within the SAR work scope and is necessary to determine applicability under the standard.	
Lori Frisk - Lori Frisk On Behalf of: Hillary Creurer, Allete - Minnesota Power, Inc., 1; - Lori Frisk	
Answer	Yes
Document Name	
Comment	

Minnesota Power supports the MRO NERC Standards Review Forum's (NSRF's) comments.	
Likes 0	
Dislikes 0	
Response	
Thank you for your comment. Please see response to the comment of the MRO NSRF.	
Daniel Gacek - Exelon - 1, Group Name Exelon	
Answer	Yes
Document Name	
Comment	
Exelon agrees with the modifications to Requirement R5.	
Likes 0	
Dislikes 0	
Response	
Thank you for your support.	
Stephanie Kenny - Edison International - Southern California Edison Company - 6	
Answer	Yes
Document Name	
Comment	
See EEI Comments	
Likes 0	
Dislikes 0	

Response	
Thank you for your comment. Please see response to EEI comment.	
Dwanique Spiller - Berkshire Hathaway - NV Energy - 5	
Answer	Yes
Document Name	
Comment	
Likes 0	
Dislikes 0	
Response	
Thank you for your support.	
Donna Wood - Tri-State G and T Association, Inc. - 1	
Answer	Yes
Document Name	
Comment	
Likes 0	
Dislikes 0	
Response	
Thank you for your support.	
Jessica Cordero - Unisource - Tucson Electric Power Co. - 1	
Answer	Yes
Document Name	
Comment	

Likes 0	
Dislikes 0	
Response	
Thank you for your support.	
Amy Wilke - American Transmission Company, LLC - 1	
Answer	Yes
Document Name	
Comment	
Likes 0	
Dislikes 0	
Response	
Thank you for your support.	
Kevin Conway - Western Power Pool - 4	
Answer	Yes
Document Name	
Comment	
Likes 0	
Dislikes 0	
Response	
Thank you for your support.	
Tremayne Brown - ReliabilityFirst - 10	

Answer	Yes
Document Name	
Comment	
Likes 0	
Dislikes 0	
Response	
Thank you for your support.	
Rebika Yitna - Rebika Yitna On Behalf of: Roger Brand, MEAG Power, 3, 1; - Rebika Yitna	
Answer	Yes
Document Name	
Comment	
Likes 0	
Dislikes 0	
Response	
Thank you for your support.	
Matthew Nicklin - Southern Illinois Power Cooperative - 1,5 - SERC	
Answer	Yes
Document Name	
Comment	
Likes 0	
Dislikes 0	

Response	
Thank you for your support.	
Wendy Kalidass - U.S. Bureau of Reclamation - 5	
Answer	Yes
Document Name	
Comment	
Likes 0	
Dislikes 0	
Response	
Thank you for your support.	
Alison Nickells - NiSource - Northern Indiana Public Service Co. - 1	
Answer	Yes
Document Name	
Comment	
Likes 0	
Dislikes 0	
Response	
Thank you for your support.	
Karen Artola - CPS Energy - 1,3,5 - Texas RE	
Answer	Yes
Document Name	
Comment	

Likes 0	
Dislikes 0	
Response	
Thank you for your support.	
Tasha Ward - Midwest Reliability Organization - 10	
Answer	Yes
Document Name	
Comment	
Likes 0	
Dislikes 0	
Response	
Thank you for your support.	
Bob Cardle - Bob Cardle On Behalf of: Marco Rios, Pacific Gas and Electric Company, 3, 1, 5; Sandra Ellis, Pacific Gas and Electric Company, 3, 1, 5; Tyler Brun, Pacific Gas and Electric Company, 3, 1, 5; - Bob Cardle	
Answer	Yes
Document Name	
Comment	
Likes 0	
Dislikes 0	
Response	
Thank you for your support.	
Sarah Miller - FirstEnergy - FirstEnergy Corporation - 4, Group Name FE Voters	

Answer	Yes
Document Name	
Comment	
Likes 0	
Dislikes 0	
Response	
Thank you for your support.	
Amy Casuscelli - Xcel Energy, Inc. - 1,3,5,6 - MRO,WECC	
Answer	Yes
Document Name	
Comment	
Likes 0	
Dislikes 0	
Response	
Thank you for your support.	
Jennifer Wright - Sempra - San Diego Gas and Electric - 5	
Answer	Yes
Document Name	
Comment	
Likes 0	
Dislikes 0	

Response	
Thank you for your support.	
TRACEY JOHNSON - Southern Indiana Gas and Electric Co. - 3,5,6 - RF	
Answer	Yes
Document Name	
Comment	
Likes 0	
Dislikes 0	
Response	
Thank you for your support.	
Joshua London - Eversource Energy - 1, Group Name Eversource	
Answer	Yes
Document Name	
Comment	
Likes 0	
Dislikes 0	
Response	
Thank you for your support.	
Randy Peters - Manitoba Hydro - 1,3,5,6 - MRO	
Answer	Yes
Document Name	
Comment	

Likes 0	
Dislikes 0	
Response	
Thank you for your support.	
Thomas Brinckman - CenterPoint Energy Houston Electric, LLC - 1 - Texas RE	
Answer	Yes
Document Name	
Comment	
Likes 0	
Dislikes 0	
Response	
Thank you for your support.	
Dan Perry - TXNM Energy - 1,3,5 - WECC,Texas RE	
Answer	Yes
Document Name	
Comment	
Likes 0	
Dislikes 0	
Response	
Thank you for your support.	
Oshara Narangoda - Oshara Narangoda On Behalf of: Aditya Menon, Hydro One Networks, Inc., 1; - Oshara Narangoda	

Answer	Yes
Document Name	
Comment	
Likes 0	
Dislikes 0	
Response	
Thank you for your support.	
Said Sidiqi - Tennessee Valley Authority - 1,3,5,6 - SERC	
Answer	Yes
Document Name	
Comment	
Likes 0	
Dislikes 0	
Response	
Thank you for your support.	
Nathan Browder - Nathan Browder On Behalf of: Matt Lewis, Lower Colorado River Authority, 1, 5; - Nathan Browder	
Answer	Yes
Document Name	
Comment	
Likes 0	
Dislikes 0	

Response	
Thank you for your support.	
Carver Powers - Utility Services, Inc. - 4	
Answer	Yes
Document Name	
Comment	
Likes 0	
Dislikes 0	
Response	
Thank you for your support.	
Jodirah Green - ACES Power Marketing - 1,3,4,5,6 - MRO,WECC,Texas RE,SERC,RF, Group Name ACES Collaborators	
Answer	Yes
Document Name	
Comment	
Likes 0	
Dislikes 0	
Response	
Thank you for your support.	
Nick Leathers - Nick Leathers On Behalf of: David Jendras Sr, Ameren - Ameren Services, 3, 6, 1; - Nick Leathers	
Answer	Yes
Document Name	
Comment	

Likes 0	
Dislikes 0	
Response	
Thank you for your support.	
Jennifer Neville - Western Area Power Administration - 6	
Answer	Yes
Document Name	
Comment	
Likes 0	
Dislikes 0	
Response	
Thank you for your support.	
Joseph Scott - Lower Colorado River Authority - 5	
Answer	Yes
Document Name	
Comment	
Likes 0	
Dislikes 0	
Response	
Thank you for your support.	
Jodi Yeary - AEP - 3	

Answer	Yes
Document Name	
Comment	
Likes 0	
Dislikes 0	
Response	
Thank you for your support.	
John Pearson - ISO New England, Inc. - 2	
Answer	Yes
Document Name	
Comment	
Likes 0	
Dislikes 0	
Response	
Thank you for your support.	
Kennedy Meier - Electric Reliability Council of Texas, Inc. - 2	
Answer	Yes
Document Name	
Comment	
Likes 0	
Dislikes 0	

Response	
Thank you for your support.	
Laura Brignola - Constellation - 6	
Answer	
Document Name	
Comment	
Not Applicable to Constellation.	
Likes 0	
Dislikes 0	
Response	
Thank you for your feedback.	
Ronald Hoover - Bonneville Power Administration - 1,3,5,6 - WECC	
Answer	
Document Name	
Comment	
For the Implementation Plan section on Initial Performance of Periodic Requirements, BPA is concerned about the potential for having to re-do work under V3 and then shortly thereafter have to do similar work to comply with V4. This is a concern when there are many sites to put through the cycle. BPA requests that the implementation plan instead use the approach found in FAC-014-3: shall be implemented by the [Registered Entity] following the effective date of [the standard] when it begins its next cycle for conducting the studies [required by the standard]. BPA also seeks clarification on R5.2 concerning critical stations identified in prior risk assessments. **Additional Assessments and Duration:** What specifically constitutes "additional assessments," and for what duration can these be forgone?	

Trigger for New Risk Assessment: Does the Transmission Owner unilaterally determine when a new risk assessment is necessary, especially given that R5.3 and R7-R10 still apply "until a new risk assessment demonstrates otherwise"?	
Likes 0	
Dislikes 0	
Response	
Thank you for your comments. The Drafting Team believes the Implementation Plan provides an appropriate transition for implementation of CIP-014-4. Regarding Requirement R5, Part 5.2, the Drafting Team believes the current language provides sufficient clarity regarding when a Transmission Owner may forgo additional assessments for a previously identified Transmission station or Transmission substation. Part 5.2 does not prevent a Transmission Owner from performing a new risk assessment when warranted. The Drafting Team does not believe additional revisions are necessary.	
Rachel Coyne - Texas Reliability Entity, Inc. - 10	
Answer	
Document Name	
Comment	
Texas RE noticed that the requirement language does not quite clarify how the terms inoperable and damaged should be reflected in the risk assessment as noted on page 4 of the SAR. It appears the SDT may be trying to address this in Requirement Part 3.1. The SDT could consider revising requirement part 3.1 to the following, which includes recommended changes in response to question #3 (in bold). 3.1 Documented criteria for assessing instability, uncontrolled separation, or Cascading within an Interconnection. The criteria shall include, at a minimum, the following: 3.1.1 technically justified thresholds identifying generation and load loss **that could cause instability, uncontrolled separation, or cascading** within the interconnection;	

3.1.2 **Clarification of the terms “inoperable” and “damaged” as used in the risk assessment.**	
Likes 0	
Dislikes 0	
Response	
Thank you for your comments. The Drafting Team believes the current language provides sufficient clarity for the risk assessment methodology. The Drafting Team does not believe additional revisions are necessary.	
Khang Le - Seminole Electric Cooperative, Inc. - 1	
Answer	
Document Name	
Comment	
See comment in Question 8	
Likes 0	
Dislikes 0	
Response	
Thank you for your comment. Please see response to your comment in Question 8.	
Lucinda Bradshaw - Lucinda Bradshaw On Behalf of: Byron Booker, Oncor Electric Delivery, 1; - Lucinda Bradshaw	
Answer	
Document Name	
Comment	
Oncor Electric Delivery Company LLC has no new comments on the most recent revisions shown in 2023-06-cip-014-4-redline-to-last-posted-03312026.docx. Instead, Oncor incorporates by reference here its previous comments submitted herein on November 5, 2024 and July 21, 2025.	

Likes 0	
Dislikes 0	
Response	
Thank you for your feedback. Please see the prior responses to the comments submitted in 2024 and 2025.	
6. Do you agree with the Implementation Plan for CIP-014-4? If you think an alternate timeframe is needed, please propose an alternate implementation plan with a detailed explanation.	
Gail Elliott - Gail Elliott On Behalf of: Michael Moltane, International Transmission Company Holdings Corporation, 1; - Gail Elliott	
Answer	**Answer**
Document Name	**Document Name**
Comment	
ITC believes there could be issues with identifying all of the proximity stations soon enough to identify their configurations and clearing times soon enough to perform all of the required studies. This is more of an issue as entities add facilities in additional states. The number of coordination agreements could also cause an issue in obtaining all of the required documentation. ITC recommends allowing 36 months for the implementation of the plan as several of the new proposed requirements will take significant time to prepare for prior to running the studies.	
Likes 0	Likes 0
Dislikes 0	Dislikes 0
Response	
Thank you for your comments. The DT continues to support the statements under “General Considerations” in the Implementation Plan on this issue. In determining an appropriate time frame, the DT considered: 1) the severity of the concerns highlighted in the FERC December 2022 order; (2) the recommendations of the NERC report entitled Evaluation of the Physical Security Reliability Standard and Physical Security Attacks to the Bulk-Power System; and (3) the Standard Authorization Request requirements. The DT determined that an Implementation Plan schedule of 24 calendar months appropriately balances the reliability need and risks against the time and resources required of entities to comply.	

Rachel Coyne - Texas Reliability Entity, Inc. - 10	
Answer	**Answer**
Document Name	**Document Name**
Comment	

Texas RE is concerned the implementation plan has a disconnect between the effective date and initial performance dates of Requirements R1 and R5. Texas RE also requests guidance on how this implementation plan works with the existing 36-month intervals for Requirements R1 and R5.

Texas RE notes that Requirement R1, which defines the process for identifying applicable Transmission stations or substations for use required risk assessments, does not specify an initial performance date. Absent an initial performance date, it is arguable that entities are not required to perform the first identification activities described in Requirement R1 until 36 calendar months following the effective date (that is, the interval period outlined in the specific requirement). However, the draft Implementation Plan states that the initial performance of the risk assessment activities required by the proposed Requirement R5 should occur by the effective date of the standard.

Importantly, however, those risk assessment activities in Requirement R5 explicitly contemplate using the station or substations identified through the Requirement R1 process. Per the language in the proposed Requirement R5, "each Transmission Owner shall perform a risk to identify applicable Transmission station(s) or Transmission substation(s) **identified in Requirement R1**" that if rendered inoperable would result in instability, uncontrolled separation, or cascading (emphasis added). Texas RE is concerned given the explicit expectation that entities perform at least some form of Requirement R1 identification activities prior to the risk assessment activities described in Requirement R5 that registered entities may be confused as the appropriate order of performance. For instance, one possible reading is that entities may use a current list of facilities for the initial performance of the new Requirement R5 risk assessment. Other registered entities may read the Requirement R1 identification process as subsumed with the Requirement R5 risk assessment and perform all those steps prior to the effective and initial performance date. In order to avoid potential inconsistent applications of the proposed standard language, Texas RE recommends that the SDT clarify whether the expectation is for a new Requirement R1 station and substation identification process should be performed in support of the initial performance of the proposed Requirement R5 risk assessment process or if the previously existing Requirement R1 stations and substations may be used.

Texas RE also inquires as to how this implementation plan considers that currently-registered applicable entities are required to this work under CIP-014-3. Does the timeline for Requirement R1 and Requirement R5 start over once CIP-014-4 is approved? Texas RE requests the drafting team provide guidance on the relationship between current activities and the implementation plan for CIP-014-4.

Lastly, Texas RE recommends the drafting team reference the practice guide regarding use of the term "calendar months."

Likes 0	Likes 0
Dislikes 0	Dislikes 0
Response	
Thank you for your comments. The DT believes that work for CIP-014-4 Requirements R1 through R5 should be completed prior to the effective date of CIP-014-4. Furthermore, the DT believes that the requirements run sequentially, such that the timing of the 36 calendar months cycle can be set by either the beginning or the end of the risk assessment. The DT suggests that any Transmission Owners beginning a risk assessment under CIP-014-3 conduct the risk assessment in such a way as to comply with CIP-014-4.	
Amy Casuscelli - Xcel Energy, Inc. - 1,3,5,6 - MRO,WECC	
Answer	**Answer**
Document Name	**Document Name**
Comment	
Xcel Energy supports EEI Comments	
Likes 0	Likes 0
Dislikes 0	Dislikes 0
Response	
Ronald Hoover - Bonneville Power Administration - 1,3,5,6 - WECC	
Answer	**Answer**
Document Name	**Document Name**
Comment	
BPA disagrees with the proposed implementation plan. The current 24-month timeline may be insufficient for Transmission Owners to complete their next assessment under the new standard. Therefore, we recommend extending the implementation plan to 36 months or more.	
Likes 0	Likes 0

Dislikes 0	Dislikes 0
Response	
Thank you for your comments. The DT continues to support the statements under “General Considerations” in the Implementation Plan on this issue. In determining an appropriate time frame, the DT considered: 1) the severity of the concerns highlighted in the FERC December 2022 order; (2) the recommendations of the NERC report entitled Evaluation of the Physical Security Reliability Standard and Physical Security Attacks to the Bulk-Power System; and (3) the Standard Authorization Request requirements. The DT determined that an Implementation Plan schedule of 24 calendar months appropriately balances the reliability need and risks against the time and resources required of entities to comply.	
Wendy Kalidass - U.S. Bureau of Reclamation - 5	
Answer	**Answer**
Document Name	**Document Name**
Comment	
Reclamation recommends revising the Implementation Plan for Initial Performance of Periodic Requirements, noting concerns about duplicating work under V3 and V4, especially with many sites involved. Additionally, Reclamation recommends adopting the FAC-014-3 approach for the implementation plan: requirements should be implemented by the [Registered Entity] at the start of its next study cycle following the effective date of [the standard].	
Likes 0	Likes 0
Dislikes 0	Dislikes 0
Response	
Thank you for your comments. The DT believes that work for CIP-014-4 Requirements R1 through R5 should be completed prior to the effective date of CIP-014-4. Furthermore, the DT believes that the requirements run sequentially, such that the timing of the 36 calendar months cycle can be set by either the beginning or the end of the risk assessment. The DT suggests that any Transmission Owners beginning a risk assessment under CIP-014-3 conduct the risk assessment in such a way as to comply with CIP-014-4.	
Stephanie Kenny - Edison International - Southern California Edison Company - 6	
Answer	**Answer**

Document Name	Document Name
Comment	
See EEI Comments	
Likes 0	Likes 0
Dislikes 0	Dislikes 0
Response	
Thank you for your comments.	
Daniel Gacek - Exelon - 1, Group Name Exelon	
Answer	**Answer**
Document Name	**Document Name**
Comment	

Exelon agrees with the Implementation Plan, however the EEI comments highlight a concern that some entities my be required to complete assessments for CIP-014-3 and CIP-014-4 in the same timeframe.

Exelon supports the clarifications suggested in the EEI comments included below:

A Transmission Owner may perform a risk assessment consistent with CIP-014-4 at any time following approval of CIP-014-4 by the appropriate regulatory authority. Where such an assessment is completed during the implementation period and prior to the effective date of CIP-014-4, that assessment shall be deemed acceptable for purposes of satisfying any then-applicable periodic risk assessment due date under CIP-014-3.

If a Transmission Owner completes a risk assessment consistent with CIP-014-4 prior to the effective date of CIP-014-4, and that assessment is completed within the Transmission Owner's then-applicable CIP-014-3 periodic risk assessment interval, the assessment shall satisfy the periodic risk assessment obligation in CIP-014-3 Requirement R1.

No additional or separate CIP-014-3 risk assessment is required to meet the CIP-014-3 periodic due date in this circumstance.

The completion date of a CIP-014-4 risk assessment used to satisfy a CIP-014-3 periodic requirement shall establish the start date for the applicable entity's next periodic risk assessment interval under CIP-014-4.

A CIP-014-4 risk assessment completed during the implementation period and used to satisfy a CIP-014-3 periodic due date shall remain valid following the retirement of CIP-014-3.	
Likes 0	Likes 0
Dislikes 0	Dislikes 0
Response	
Thank you for your comments. See the DT's previous response regarding timing of CIP-014-3 versus CIP-014-4 risk assessments.	
Lori Frisk - Lori Frisk On Behalf of: Hillary Creurer, Allete - Minnesota Power, Inc., 1; - Lori Frisk	
Answer	**Answer**
Document Name	**Document Name**
Comment	
Minesota Power supports EEI's comments	
Likes 0	Likes 0
Dislikes 0	Dislikes 0
Response	
Thank you for your comments.	
Todd Garwick - Edison International - Southern California Edison Company - 3	
Answer	**Answer**
Document Name	**Document Name**
Comment	
See comments submitted by Edison Electric Institute	
Likes 0	Likes 0
Dislikes 0	Dislikes 0

Response	
Thank you for your comments.	
Hayk Zargaryan - Edison International - Southern California Edison Company - 1	
Answer	**Answer**
Document Name	**Document Name**
Comment	
See comments submitted by Edison Electric Institute.	
Likes 0	Likes 0
Dislikes 0	Dislikes 0
Response	
Thank you for your comments.	
Nick Leathers - Nick Leathers On Behalf of: David Jendras Sr, Ameren - Ameren Services, 3, 6, 1; - Nick Leathers	
Answer	**Answer**
Document Name	**Document Name**
Comment	
Ameren would like more clarity around whether a study performed for Version 4 would satisfy the requirement for Version 3 (When would you have to do the first study under version 4?).	
Likes 0	Likes 0
Dislikes 0	Dislikes 0
Response	
Thank you for your comments. See the DT's previous response regarding timing of CIP-014-3 versus CIP-014-4 risk assessments.	
Clay Walker - Clay Walker On Behalf of: Robert Hirchak, Cleco Corporation, 6, 5, 1, 3; - Clay Walker	
Answer	**Answer**

Document Name	Document Name
Comment	
Cleco agrees with EEI comments.	
Likes 0	Likes 0
Dislikes 0	Dislikes 0
Response	
Thank you for your comments.	
Timothy Singh - Timothy Singh On Behalf of: Israel Perez, Salt River Project, 6, 3, 5, 1; Jennifer Bennett, Salt River Project, 6, 3, 5, 1; Laura Somak, Salt River Project, 6, 3, 5, 1; Matthew Jaramilla, Salt River Project, 6, 3, 5, 1; - Timothy Singh	
Answer	**Answer**
Document Name	**Document Name**
Comment	
Although SRP agrees with the Implementation plan, a 36-month timeframe would be more appropriate, given the 36-month assessment cycle.	
Likes 0	Likes 0
Dislikes 0	Dislikes 0
Response	
Thank you for your comments. See the DT's previous response regarding the 36-month timeframe.	
Kirsten Rowley - Midcontinent ISO, Inc. - 2, Group Name ISO/RTO Council (IRC) Standards Review Committee (SRC)	
Answer	**Answer**
Document Name	**Document Name**
Comment	
No comment.	

Likes 0	Likes 0
Dislikes 0	Dislikes 0
Response	
Thank you.	
Andrea Koch - Edison Electric Institute - NA - Not Applicable - NA - Not Applicable	
Answer	**Answer**
Document Name	**Document Name**
Comment	
EEI agrees with the Implementation Plan but proposes the following language to provide clarity regarding the performance of CIP-014 Assessments prior to the effective date of CIP-014-4. **A Transmission Owner may perform a physical security risk assessment consistent with CIP-014-4 at any time following approval of CIP-014-4 by the appropriate regulatory authority. Where such an assessment is completed during the implementation period and prior to the effective date of CIP-014-4, that assessment shall be deemed acceptable for purposes of satisfying any then-applicable periodic physical security risk assessment due date under CIP-014-3.** **If a Transmission Owner completes a physical security risk assessment consistent with CIP-014-4 prior to the effective date of CIP-014-4, and that assessment is completed within the Transmission Owner's then-applicable CIP-014-3 periodic risk assessment interval, the assessment shall satisfy the periodic risk assessment obligation in CIP-014-3 Requirement R1.** **No additional or separate CIP-014-3 risk assessment is required to meet the CIP-014-3 periodic due date in this circumstance.** **The completion date of a CIP-014-4 risk assessment used to satisfy a CIP-014-3 periodic requirement shall establish the start date for the applicable entity's next periodic physical security risk assessment interval under CIP-014-4.** **A CIP-014-4 risk assessment completed during the implementation period and used to satisfy a CIP-014-3 periodic due date shall remain valid following the retirement of CIP-014-3.**	
Likes 0	Likes 0
Dislikes 0	Dislikes 0

Response	
Thank you for your comments. See the DT's previous response regarding timing of CIP-014-3 versus CIP-014-4 risk assessments.	
Dan Perry - TXNM Energy - 1,3,5 - WECC,Texas RE	
Answer	**Answer**
Document Name	**Document Name**
Comment	
TXNM Energy agrees with EEI submitted comments repeated below. EEI agrees with the Implementation Plan but proposes the following language to provide clarity regarding the performance of CIP-014 Assessments prior to the effective date of CIP-014-4. **A Transmission Owner may perform a physical security risk assessment consistent with CIP-014-4 at any time following approval of CIP-014-4 by the appropriate regulatory authority. Where such an assessment is completed during the implementation period and prior to the effective date of CIP-014-4, that assessment shall be deemed acceptable for purposes of satisfying any then-applicable periodic physical security risk assessment due date under CIP-014-3.** **If a Transmission Owner completes a physical security risk assessment consistent with CIP-014-4 prior to the effective date of CIP-014-4, and that assessment is completed within the Transmission Owner's then-applicable CIP-014-3 periodic risk assessment interval, the assessment shall satisfy the periodic risk assessment obligation in CIP-014-3 Requirement R1.** **No additional or separate CIP-014-3 risk assessment is required to meet the CIP-014-3 periodic due date in this circumstance.** **The completion date of a CIP-014-4 risk assessment used to satisfy a CIP-014-3 periodic requirement shall establish the start date for the applicable entity's next periodic physical security risk assessment interval under CIP-014-4.** **A CIP-014-4 risk assessment completed during the implementation period and used to satisfy a CIP-014-3 periodic due date shall remain valid following the retirement of CIP-014-3.**	
Likes 0	Likes 0
Dislikes 0	Dislikes 0

Response	
Thank you for your comments. See the DT's previous response regarding timing of CIP-014-3 versus CIP-014-4 risk assessments.	
Alan Kloster - Alan Kloster On Behalf of: Jeremy Harris, Evergy, 3, 5, 1, 6; Kevin Frick, Evergy, 3, 5, 1, 6; Marcus Moor, Evergy, 3, 5, 1, 6; Tiffany Lake, Evergy, 3, 5, 1, 6; - Alan Kloster	
Answer	**Answer**
Document Name	**Document Name**
Comment	
Evergy supports and incorporates by reference the comments of the Edison Electric Institute (EEI) for question #6.	
Likes 0	Likes 0
Dislikes 0	Dislikes 0
Response	
Thank you for your comments. See the DT's previous response regarding timing of CIP-014-3 versus CIP-014-4 risk assessments.	
Joseph Gatten - Great River Energy - 3, Group Name Great River Energy	
Answer	**Answer**
Document Name	**Document Name**
Comment	
No additional comment.	
Likes 0	Likes 0
Dislikes 0	Dislikes 0
Response	
Thank you.	
Rachel Schuldt - Black Hills Corporation - 6, Group Name Black Hills Corporation - All Segments	
Answer	**Answer**

Document Name	Document Name
Comment	
Black Hills Corporation agrees with the Implementation Plan.	
Likes 0	Likes 0
Dislikes 0	Dislikes 0
Response	
Thank you.	
Sarah Miller - FirstEnergy - FirstEnergy Corporation - 4, Group Name FE Voters	
Answer	**Answer**
Document Name	**Document Name**
Comment	
FirstEnergy supports EEI comments which state:" EEI agrees with the Implementation Plan but proposes the following language to provide clarity regarding the performance of CIP-014 Assessments prior to the effective date of CIP-014-4. MEMBER FEEDBACK: **A Transmission Owner may perform a physical security risk assessment consistent with CIP-014-4 at any time following approval of CIP-014-4 by the appropriate regulatory authority. Where such an assessment is completed during the implementation period and prior to the effective date of CIP-014-4, that assessment shall be deemed acceptable for purposes of satisfying any then-applicable periodic physical security risk assessment due date under CIP-014-3.** **If a Transmission Owner completes a physical security risk assessment consistent with CIP-014-4 prior to the effective date of CIP-014-4, and that assessment is completed within the Transmission Owner's then-applicable CIP-014-3 periodic risk assessment interval, the assessment shall satisfy the periodic risk assessment obligation in CIP-014-3 Requirement R1.** **No additional or separate CIP-014-3 risk assessment is required to meet the CIP-014-3 periodic due date in this circumstance.**	

The completion date of a CIP-014-4 risk assessment used to satisfy a CIP-014-3 periodic requirement shall establish the start date for the applicable entity's next periodic physical security risk assessment interval under CIP-014-4. **A CIP-014-4 risk assessment completed during the implementation period and used to satisfy a CIP-014-3 periodic due date shall remain valid following the retirement of CIP-014-3.**	
Likes 0	Likes 0
Dislikes 0	Dislikes 0
Response	
Thank you for your comments. See the DT's previous response regarding timing of CIP-014-3 versus CIP-014-4 risk assessments.	
Kelly Heims - Central Iowa Power Cooperative - 1	
Answer	**Answer**
Document Name	**Document Name**
Comment	
Central Iowa Power Cooperative supports the MRO's NERC Standards Review Forum (NSRF) and ACES comments for Question 6.	
Likes 0	Likes 0
Dislikes 0	Dislikes 0
Response	
Thank you for your comments.	
Misty Carneal - Duke Energy - 1,3,5,6 - SERC,RF	
Answer	**Answer**
Document Name	**Document Name**
Comment	
Duke Energy supports the modifications.	

Likes 0	Likes 0
Dislikes 0	Dislikes 0
Response	
Thank you for your comments.	
Kennedy Meier - Electric Reliability Council of Texas, Inc. - 2	
Answer	**Answer**
Document Name	**Document Name**
Comment	
Likes 0	Likes 0
Dislikes 0	Dislikes 0
Response	
Thank you.	
John Pearson - ISO New England, Inc. – 2	
Answer	**Answer**
Document Name	**Document Name**
Comment	
Likes 0	Likes 0
Dislikes 0	Dislikes 0
Response	
Thank you.	
Constantin Chitescu - Ontario Power Generation Inc. - 5	
Answer	**Answer**

Document Name	**Document Name**
Comment	
Likes 0	Likes 0
Dislikes 0	Dislikes 0
Response	
Thank you.	
Naresh Latchman - Georgia System Operations Corporation - 3	
Answer	**Answer**
Document Name	**Document Name**
Comment	
Likes 0	Likes 0
Dislikes 0	Dislikes 0
Response	
Thank you.	
Jodi Yeary - AEP – 3	
Answer	**Answer**
Document Name	**Document Name**
Comment	
Likes 0	Likes 0
Dislikes 0	Dislikes 0
Response	

Thank you.	
Joseph Scott - Lower Colorado River Authority - 5	
Answer	**Answer**
Document Name	**Document Name**
Comment	
Likes 0	Likes 0
Dislikes 0	Dislikes 0
Response	
Thank you.	
Ruida Shu - Northeast Power Coordinating Council - 10, Group Name NPCC RSC	
Answer	**Answer**
Document Name	**Document Name**
Comment	
Likes 0	Likes 0
Dislikes 0	Dislikes 0
Response	
Thank you.	
Jennifer Neville - Western Area Power Administration - 6	
Answer	**Answer**
Document Name	**Document Name**
Comment	

Likes 0	Likes 0
Dislikes 0	Dislikes 0
Response	
Thank you.	
Jodirah Green - ACES Power Marketing - 1,3,4,5,6 - MRO,WECC,Texas RE,SERC,RF, Group Name ACES Collaborators	
Answer	**Answer**
Document Name	**Document Name**
Comment	
Likes 0	Likes 0
Dislikes 0	Dislikes 0
Response	
Thank you.	
Carver Powers - Utility Services, Inc. - 4	
Answer	**Answer**
Document Name	**Document Name**
Comment	
Likes 0	Likes 0
Dislikes 0	Dislikes 0
Response	
Thank you.	
Nathan Browder - Nathan Browder On Behalf of: Matt Lewis, Lower Colorado River Authority, 1, 5; - Nathan Browder	
Answer	**Answer**

Document Name	**Document Name**
Comment	
Likes 0	Likes 0
Dislikes 0	Dislikes 0
Response	
Thank you.	
Said Sidiqi - Tennessee Valley Authority - 1,3,5,6 - SERC	
Answer	**Answer**
Document Name	**Document Name**
Comment	
Likes 0	Likes 0
Dislikes 0	Dislikes 0
Response	
Thank you.	
Oshara Narangoda - Oshara Narangoda On Behalf of: Aditya Menon, Hydro One Networks, Inc., 1; - Oshara Narangoda	
Answer	**Answer**
Document Name	**Document Name**
Comment	
Likes 0	Likes 0
Dislikes 0	Dislikes 0
Response	

Thank you.	
Matt Bullard - Dominion - Dominion Virginia Power - 3, Group Name Dominion Energy	
Answer	**Answer**
Document Name	**Document Name**
Comment	
Likes 0	Likes 0
Dislikes 0	Dislikes 0
Response	
Thank you.	
Thomas Brinckman - CenterPoint Energy Houston Electric, LLC - 1 - Texas RE	
Answer	**Answer**
Document Name	**Document Name**
Comment	
Likes 0	Likes 0
Dislikes 0	Dislikes 0
Response	
Thank you.	
Randy Peters - Manitoba Hydro - 1,3,5,6 - MRO	
Answer	**Answer**
Document Name	**Document Name**
Comment	

Likes 0	Likes 0
Dislikes 0	Dislikes 0
Response	
Thank you.	
Joshua London - Eversource Energy - 1, Group Name Eversource	
Answer	**Answer**
Document Name	**Document Name**
Comment	
Likes 0	Likes 0
Dislikes 0	Dislikes 0
Response	
Thank you.	
Chantal Mazza - Chantal Mazza On Behalf of: Junji Yamaguchi, Hydro-Quebec (HQ), 1, 5; Nicolas Turcotte, Hydro-Quebec (HQ), 1, 5; - Chantal Mazza	
Answer	**Answer**
Document Name	**Document Name**
Comment	
Likes 0	Likes 0
Dislikes 0	Dislikes 0
Response	
Thank you.	
Isidoro Behar - Long Island Power Authority - 1	
Answer	**Answer**

Document Name	Document Name
Comment	
Likes 0	Likes 0
Dislikes 0	Dislikes 0
Response	
Thank you.	
Daniel Valle - New York Power Authority - 1	
Answer	**Answer**
Document Name	**Document Name**
Comment	
Likes 0	Likes 0
Dislikes 0	Dislikes 0
Response	
Thank you.	
Zahid Qayyum - New York Power Authority - 5	
Answer	**Answer**
Document Name	**Document Name**
Comment	
Likes 0	Likes 0
Dislikes 0	Dislikes 0
Response	

Thank you.	
TRACEY JOHNSON - Southern Indiana Gas and Electric Co. - 3,5,6 - RF	
Answer	**Answer**
Document Name	**Document Name**
Comment	
Likes 0	Likes 0
Dislikes 0	Dislikes 0
Response	
Thank you.	
Katrina Lyons - Georgia System Operations Corporation - 4	
Answer	**Answer**
Document Name	**Document Name**
Comment	
Likes 0	Likes 0
Dislikes 0	Dislikes 0
Response	
Thank you.	
Jennifer Wright - Sempra - San Diego Gas and Electric - 5	
Answer	**Answer**
Document Name	**Document Name**
Comment	

Likes 0	Likes 0
Dislikes 0	Dislikes 0
Response	
Thank you.	
Tamarra Hardie - Public Utility District No. 1 of Chelan County - 6, Group Name CHPD	
Answer	**Answer**
Document Name	**Document Name**
Comment	
Likes 0	Likes 0
Dislikes 0	Dislikes 0
Response	
Thank you.	
Jeffrey Streifling - NB Power Corporation - 1	
Answer	**Answer**
Document Name	**Document Name**
Comment	
Likes 0	Likes 0
Dislikes 0	Dislikes 0
Response	
Thank you.	
Bob Cardle - Bob Cardle On Behalf of: Marco Rios, Pacific Gas and Electric Company, 3, 1, 5; Sandra Ellis, Pacific Gas and Electric Company, 3, 1, 5; Tyler Brun, Pacific Gas and Electric Company, 3, 1, 5; - Bob Cardle	
Answer	**Answer**

Document Name	Document Name
Comment	
Likes 0	Likes 0
Dislikes 0	Dislikes 0
Response	
Thank you.	
Tasha Ward - Midwest Reliability Organization - 10	
Answer	**Answer**
Document Name	**Document Name**
Comment	
Likes 0	Likes 0
Dislikes 0	Dislikes 0
Response	
Thank you.	
Stephen Stafford - Stephen Stafford On Behalf of: Greg Davis, Georgia Transmission Corporation, 1; - Stephen Stafford	
Answer	**Answer**
Document Name	**Document Name**
Comment	
Likes 0	Likes 0
Dislikes 0	Dislikes 0
Response	

Thank you.	
Anna Martinson - MRO - 1,2,3,4,5,6 - MRO, Group Name MRO Group	
Answer	**Answer**
Document Name	**Document Name**
Comment	
Likes 0	Likes 0
Dislikes 0	Dislikes 0
Response	
Thank you.	
Karen Artola - CPS Energy - 1,3,5 - Texas RE	
Answer	**Answer**
Document Name	**Document Name**
Comment	
Likes 0	Likes 0
Dislikes 0	Dislikes 0
Response	
Thank you.	
Alison Nickells - NiSource - Northern Indiana Public Service Co. - 1	
Answer	**Answer**
Document Name	**Document Name**
Comment	

Likes 0	Likes 0
Dislikes 0	Dislikes 0
Response	
Thank you.	
Alyssia Rhoads - Public Utility District No. 1 of Snohomish County - 1	
Answer	**Answer**
Document Name	**Document Name**
Comment	
Likes 0	Likes 0
Dislikes 0	Dislikes 0
Response	
Thank you.	
Matthew Nicklin - Southern Illinois Power Cooperative - 1,5 - SERC	
Answer	**Answer**
Document Name	**Document Name**
Comment	
Likes 0	Likes 0
Dislikes 0	Dislikes 0
Response	
Thank you.	
Rebika Yitna - Rebika Yitna On Behalf of: Roger Brand, MEAG Power, 3, 1; - Rebika Yitna	
Answer	**Answer**

Document Name	**Document Name**
Comment	
Likes 0	Likes 0
Dislikes 0	Dislikes 0
Response	
Thank you.	
Tremayne Brown - ReliabilityFirst - 10	
Answer	**Answer**
Document Name	**Document Name**
Comment	
Likes 0	Likes 0
Dislikes 0	Dislikes 0
Response	
Thank you.	
Kevin Conway - Western Power Pool - 4	
Answer	**Answer**
Document Name	**Document Name**
Comment	
Likes 0	Likes 0
Dislikes 0	Dislikes 0
Response	

Thank you.	
Amy Wilke - American Transmission Company, LLC - 1	
Answer	**Answer**
Document Name	**Document Name**
Comment	
Likes 0	Likes 0
Dislikes 0	Dislikes 0
Response	
Thank you.	
Jessica Cordero - Unisource - Tucson Electric Power Co. - 1	
Answer	**Answer**
Document Name	**Document Name**
Comment	
Likes 0	Likes 0
Dislikes 0	Dislikes 0
Response	
Thank you.	
Donna Wood - Tri-State G and T Association, Inc. - 1	
Answer	**Answer**
Document Name	**Document Name**
Comment	

Likes 0	Likes 0
Dislikes 0	Dislikes 0
Response	
Thank you.	
Dwanique Spiller - Berkshire Hathaway - NV Energy - 5	
Answer	**Answer**
Document Name	**Document Name**
Comment	
Likes 0	Likes 0
Dislikes 0	Dislikes 0
Response	
Thank you.	
Nikki Carson-Marquis - Nikki Carson-Marquis On Behalf of: Theresa Allard, Minnkota Power Cooperative Inc., 1; - Nikki Carson-Marquis	
Answer	**Answer**
Document Name	**Document Name**
Comment	
MPC believes a 36-month implementation timeframe would be more appropriate given the 36-month cycle proposed in Requirement R1, but understands the Standard Drafting Team's reasons for choosing the 24-month implementation.	
Likes 0	Likes 0
Dislikes 0	Dislikes 0
Response	
Thank you for your comments. See the DT's previous response regarding timing of CIP-014-3 versus CIP-014-4 risk assessments.	
Lucinda Bradshaw - Lucinda Bradshaw On Behalf of: Byron Booker, Oncor Electric Delivery, 1; - Lucinda Bradshaw	

Answer	**Answer**
Document Name	**Document Name**
Comment	
Oncor Electric Delivery Company LLC has no new comments on the Implementation Plan for CIP-014-4. Instead, Oncor incorporates by reference here its previous comments submitted herein on November 5, 2024 and July 21, 2025	
Likes 0	Likes 0
Dislikes 0	Dislikes 0
Response	
Thank you for your comments.	
Khang Le - Seminole Electric Cooperative, Inc. - 1	
Answer	**Answer**
Document Name	**Document Name**
Comment	
See comment in Question 8	
Likes 0	Likes 0
Dislikes 0	Dislikes 0
Response	
Thank you for your comments.	
Laura Brignola - Constellation - 6	
Answer	**Answer**
Document Name	**Document Name**
Comment	

Not Applicable to Constellation.	
Likes 0	Likes 0
Dislikes 0	Dislikes 0
Response	
Thank you for your comments.	

7. Do you believe there are alternatives or more cost-effective options to address the recommendations in CIP-014-4 to address the reliability issue of physical security? If so, please provide your recommendation and, if appropriate, technical, or procedural justification.	
Anna Martinson - MRO - 1,2,3,4,5,6 - MRO, Group Name MRO Group	
Answer	No
Document Name	
Comment	
MRO NSRF does not have any comments.	
Likes 0	
Dislikes 0	
Response	
Thank you for your support.	
Kelly Heims - Central Iowa Power Cooperative - 1	
Answer	No
Document Name	
Comment	
Central Iowa Power Cooperative supports the MRO's NERC Standards Review Forum (NSRF) and ACES comments for Question 7.	
Likes 0	
Dislikes 0	
Response	
Thank you for your support.	
Joseph Gatten - Great River Energy - 3, Group Name Great River Energy	
Answer	No

Document Name	
Comment	
No additional comment.	
Likes 0	
Dislikes 0	
Response	
Thank you for your support.	
Misty Carneal - Duke Energy - 1,3,5,6 - SERC,RF	
Answer	No
Document Name	
Comment	
Likes 0	
Dislikes 0	
Response	
Thank you for your support.	
Jessica Cordero - Unisource - Tucson Electric Power Co. - 1	
Answer	No
Document Name	
Comment	
Likes 0	
Dislikes 0	

Response	
Thank you for your support.	
Amy Wilke - American Transmission Company, LLC - 1	
Answer	No
Document Name	
Comment	
Likes 0	
Dislikes 0	
Response	
Thank you for your support.	
Kevin Conway - Western Power Pool - 4	
Answer	No
Document Name	
Comment	
Likes 0	
Dislikes 0	
Response	
Thank you for your support.	
Rebika Yitna - Rebika Yitna On Behalf of: Roger Brand, MEAG Power, 3, 1; - Rebika Yitna	
Answer	No
Document Name	
Comment	

Likes 0	
Dislikes 0	
Response	
Thank you for your support.	
Matthew Nicklin - Southern Illinois Power Cooperative - 1,5 - SERC	
Answer	No
Document Name	
Comment	
Likes 0	
Dislikes 0	
Response	
Thank you for your support.	
Wendy Kalidass - U.S. Bureau of Reclamation - 5	
Answer	No
Document Name	
Comment	
Likes 0	
Dislikes 0	
Response	
Thank you for your support.	
Alison Nickells - NiSource - Northern Indiana Public Service Co. - 1	

Answer	No
Document Name	
Comment	
Likes 0	
Dislikes 0	
Response	
Thank you for your support.	
Tasha Ward - Midwest Reliability Organization - 10	
Answer	No
Document Name	
Comment	
Likes 0	
Dislikes 0	
Response	
Thank you for your support.	
Jennifer Wright - Sempra - San Diego Gas and Electric - 5	
Answer	No
Document Name	
Comment	
Likes 0	
Dislikes 0	

Response	
Thank you for your support.	
Alan Kloster - Alan Kloster On Behalf of: Jeremy Harris, Evergy, 3, 5, 1, 6; Kevin Frick, Evergy, 3, 5, 1, 6; Marcus Moor, Evergy, 3, 5, 1, 6; Tiffany Lake, Evergy, 3, 5, 1, 6; - Alan Kloster	
Answer	No
Document Name	
Comment	
Likes 0	
Dislikes 0	
Response	
Thank you for your support.	
Dan Perry - TXNM Energy - 1,3,5 - WECC,Texas RE	
Answer	No
Document Name	
Comment	
Thank you for your support.	
Likes 0	
Dislikes 0	
Response	
Thank you for your support.	
Said Sidiqi - Tennessee Valley Authority - 1,3,5,6 - SERC	
Answer	No
Document Name	
Comment	

Likes 0	
Dislikes 0	
Response	
Thank you for your support.	
Nathan Browder - Nathan Browder On Behalf of: Matt Lewis, Lower Colorado River Authority, 1, 5; - Nathan Browder	
Answer	No
Document Name	
Comment	
Likes 0	
Dislikes 0	
Response	
Thank you for your support.	
Jodirah Green - ACES Power Marketing - 1,3,4,5,6 - MRO,WECC,Texas RE,SERC,RF, Group Name ACES Collaborators	
Answer	No
Document Name	
Comment	
Likes 0	
Dislikes 0	
Response	
Thank you for your support.	
Jennifer Neville - Western Area Power Administration - 6	

Answer	No
Document Name	
Comment	
Likes 0	
Dislikes 0	
Response	
Thank you for your support.	
Joseph Scott - Lower Colorado River Authority - 5	
Answer	No
Document Name	
Comment	
Likes 0	
Dislikes 0	
Response	
Thank you for your support.	
Lori Frisk - Lori Frisk On Behalf of: Hillary Creurer, Allete - Minnesota Power, Inc., 1; - Lori Frisk	
Answer	No
Document Name	
Comment	
Likes 0	
Dislikes 0	

Response	
Thank you for your support.	
Alyssia Rhoads - Public Utility District No. 1 of Snohomish County - 1	
Answer	Yes
Document Name	
Comment	
SNPD recognizes the increased financial burden associated with performing risk assessments every 36 months, rather than every 60 months, for Transmission Owners that have not identified any applicable Transmission stations or substations. This burden is further amplified by the requirement to have each assessment verified by an unaffiliated third party at the same increased frequency. SNPD believes there are more cost-effective alternatives to address the physical security reliability objectives of CIP-014-4. Specifically, SNPD recommends maintaining a risk-based, performance-oriented approach by retaining the existing 60-month assessment interval for Transmission Owners that have not previously identified any applicable facilities. For these entities, historical assessments have demonstrated a low likelihood of identifying critical assets, and increasing the frequency does not provide a commensurate reliability benefit. Additionally, SNPD recommends that enhanced requirements, such as performing risk assessments every 36 months and requiring third-party verification, be applied only to entities that have previously identified critical Transmission stations or substations, or where system changes indicate a higher risk profile. This targeted, risk-based approach would better align regulatory requirements with actual system risk and improve overall cost-effectiveness. SNPD also supports continued inclusion of planned Transmission stations and substations expected to be placed in service within the assessment window, ensuring that future system changes are appropriately evaluated without imposing unnecessary burdens on entities with consistently low-risk profiles. Overall, a tiered, risk-informed framework would more effectively balance reliability objectives with cost considerations, while avoiding unnecessary regulatory and financial impacts on entities unlikely to identify CIP-014 critical facilities.	
Likes 0	
Dislikes 0	
Response	
Thank you for your comments. The drafting team carefully considered these comments in light of the Standard Authorization Request (SAR) requirement that it correct discrepancies between the study period, frequency of study, and the base cases a Transmission Owner uses. In developing proposed	

Reliability Standard CIP-014-4, the drafting team balanced concerns from stakeholders regarding the burden on applicable Transmission Owners against the requirements of the SAR and the benefits to reliability from identifying and physically protecting those Transmission stations, Transmission substations, and their associated primary control centers that are critical to the reliable and secure operation of the Bulk Power System.	
Stephen Stafford - Stephen Stafford On Behalf of: Greg Davis, Georgia Transmission Corporation, 1; - Stephen Stafford	
Answer	Yes
Document Name	
Comment	
Currently, CIP-014 requires Transmission Owners to conduct planning analyses, and then have these analyses reviewed by a third party verifier. Requirement 6.1 states the the third party verifier must be a registered Planning Coordinator, Transmission Planner, Reliability Coordinator, or have transmission planning or analysis experience. Therefore, instead of a planning entity performing the study, the TO must pay a third party to verify the assessment and now at a higher frequency (36 month vs 60 month).	
Likes 0	
Dislikes 0	
Response	
Thank you for your comments. The drafting team carefully considered these comments in light of the Standard Authorization Request (SAR) requirement that it correct discrepancies between the study period, frequency of study, and the base cases a Transmission Owner uses. In developing proposed Reliability Standard CIP-014-4, the drafting team balanced concerns from stakeholders regarding the burden on applicable Transmission Owners against the requirements of the SAR and the benefits to reliability from identifying and physically protecting those Transmission stations, Transmission substations, and their associated primary control centers that are critical to the reliable and secure operation of the Bulk Power System.	
Bob Cardle - Bob Cardle On Behalf of: Marco Rios, Pacific Gas and Electric Company, 3, 1, 5; Sandra Ellis, Pacific Gas and Electric Company, 3, 1, 5; Tyler Brun, Pacific Gas and Electric Company, 3, 1, 5; - Bob Cardle	
Answer	Yes
Document Name	
Comment	
PG&E does not comment on cost effectiveness.	

Likes 0	
Dislikes 0	
Response	
Thank you for your support.	
Jeffrey Streifling - NB Power Corporation - 1	
Answer	Yes
Document Name	
Comment	
As noted above.	
Likes 0	
Dislikes 0	
Response	
Thank you for your support.	
Tamarra Hardie - Public Utility District No. 1 of Chelan County - 6, Group Name CHPD	
Answer	Yes
Document Name	
Comment	
The current standard treats physical security measures as the default solution and does not clearly allow for system-level mitigations. In many cases, lower cost options could be available. Take a system issue for example that leads to instability could instead be resolved by changing relay settings to be more sensitive when normally redundant communication is lost, this would lead to an inexpensive solution to fix the problem, whereas a physical barrier such as a fence does not address the risk exposure of the lines leaving the station. It is strongly recommended that the standard includes some sort of concept where utilities could alternately identify solutions, as confirmed by the 3rd party, in lieu of directly going to the physical security step. As written, the standard does not prohibit system-level solutions, but it also does not acknowledge them or present them as viable alternatives to physical security measures. This lack of clarity limits the opportunity to pursue effective, lower-cost fixes that directly address the underlying issue.	

More technical guidance from NERC on damage distances for a variety of bomb threat types is recommended and modifying the distance requirement in R2 to be based upon damage thresholds rather than personnel evacuation mandates. Additionally in R2, allowing utilities the flexibility to provide rationale in their CIP-014 assessments for why any identified proximate stations within the provided distance should be excluded or if any different distances are used would lead to more realistic physical security scenarios being assessed and reduce the cost-burden of assessing scenarios that are beyond reasonable damage distances.	
Likes 0	
Dislikes 0	
Response	
Thank you for your comments. The drafting team carefully considered these comments in light of the Standard Authorization Request (SAR) requirement that it correct discrepancies between the study period, frequency of study, and the base cases a Transmission Owner uses. In developing proposed Reliability Standard CIP-014-4, the drafting team balanced concerns from stakeholders regarding the burden on applicable Transmission Owners against the requirements of the SAR and the benefits to reliability from identifying and physically protecting those Transmission stations, Transmission substations, and their associated primary control centers that are critical to the reliable and secure operation of the Bulk Power System.	
Katrina Lyons - Georgia System Operations Corporation - 4	
Answer	Yes
Document Name	
Comment	
Currently, CIP-014 requires Transmission Owners to conduct planning analyses, and then have these analyses reviewed by a third party verifier. Requirement 6.1 states the the third party verifier must be a registered Planning Coordinator, Transmission Planner, Reliability Coordinator, or have transmission planning or analysis experience. Therefore, instead of a planning entity performing the study, the TO must pay a third party to verify the assessment and now at a higher frequency (36 month vs 60 month).	
Likes 0	
Dislikes 0	
Response	
Thank you for your comments. The drafting team carefully considered these comments in light of the Standard Authorization Request (SAR) requirement that it correct discrepancies between the study period, frequency of study, and the base cases a Transmission Owner uses. In developing proposed Reliability Standard CIP-014-4, the drafting team balanced concerns from stakeholders regarding the burden on applicable Transmission Owners against	

the requirements of the SAR and the benefits to reliability from identifying and physically protecting those Transmission stations, Transmission substations, and their associated primary control centers that are critical to the reliable and secure operation of the Bulk Power System.	
Isidoro Behar - Long Island Power Authority - 1	
Answer	Yes
Document Name	
Comment	
Similar to TPL-001-5.1 Requirement 2.6, we recommend that the SDT consider, and if applicable, outline under which specific circumstances past studies/results can be utilized for the CIP-014-4 risk assessment. The possible use of past studies may reduce workload of entities and support a more cost effective option to address CIP-014-4 needs.	
Likes 0	
Dislikes 0	
Response	
Thank you for your comments. The drafting team carefully considered these comments in light of the Standard Authorization Request (SAR) requirement that it correct discrepancies between the study period, frequency of study, and the base cases a Transmission Owner uses. In developing proposed Reliability Standard CIP-014-4, the drafting team balanced concerns from stakeholders regarding the burden on applicable Transmission Owners against the requirements of the SAR and the benefits to reliability from identifying and physically protecting those Transmission stations, Transmission substations, and their associated primary control centers that are critical to the reliable and secure operation of the Bulk Power System.	
Randy Peters - Manitoba Hydro - 1,3,5,6 - MRO	
Answer	Yes
Document Name	
Comment	
See our comments for Q3	
Likes 0	
Dislikes 0	

Response
Thank you for your comments. The drafting team carefully considered these comments in light of the Standard Authorization Request (SAR) requirement that it correct discrepancies between the study period, frequency of study, and the base cases a Transmission Owner uses. In developing proposed Reliability Standard CIP-014-4, the drafting team balanced concerns from stakeholders regarding the burden on applicable Transmission Owners against the requirements of the SAR and the benefits to reliability from identifying and physically protecting those Transmission stations, Transmission substations, and their associated primary control centers that are critical to the reliable and secure operation of the Bulk Power System.

Timothy Singh - Timothy Singh On Behalf of: Israel Perez, Salt River Project, 6, 3, 5, 1; Jennifer Bennett, Salt River Project, 6, 3, 5, 1; Laura Somak, Salt River Project, 6, 3, 5, 1; Matthew Jaramilla, Salt River Project, 6, 3, 5, 1; - Timothy Singh	
Answer	Yes
Document Name	
Comment	
There needs to be much more clarification regarding the issue raised in the comments. The Standard has changed a lot since the last iteration but so have threats and the means to mitigate them. If the Standard considered some of the ideas and clarifications brought up by SRP and others, it would be for the betterment of the industry.	
Likes 0	
Dislikes 0	

Response
Thank you for your comments. The drafting team carefully considered these comments in light of the Standard Authorization Request (SAR) requirement that it correct discrepancies between the study period, frequency of study, and the base cases a Transmission Owner uses. In developing proposed Reliability Standard CIP-014-4, the drafting team balanced concerns from stakeholders regarding the burden on applicable Transmission Owners against the requirements of the SAR and the benefits to reliability from identifying and physically protecting those Transmission stations, Transmission substations, and their associated primary control centers that are critical to the reliable and secure operation of the Bulk Power System.

Gail Elliott - Gail Elliott On Behalf of: Michael Moltane, International Transmission Company Holdings Corporation, 1; - Gail Elliott	
Answer	Yes
Document Name	
Comment	

The requirement for documentation for joint station is not cost effective. Requiring all entities to provide this documentation for historic stations is an administrative burden. This requirement should only be applicable to those entities who failed to perform a risk assessment for a joint station. The requirement to include proximity stations owned by other entities puts unreasonable requirements on the TO as other entities may not willingly provide, and may not be bound by CIP-14 to provide, documentation for those stations. In addition, it places unreasonable burden on the TO to field visit and identify proximity stations prior to studies each cycle. ITC suggests narrowing the scope to existing BES Transmission station(s) and BES Transmission substation(s) which are owned by the applicable entity, or including a requirement that neighboring entities are required to provide station names and GIS locations.	
Likes 0	
Dislikes 0	
Response	
Thank you for your comments. The drafting team carefully considered these comments in light of the Standard Authorization Request (SAR) requirement that it correct discrepancies between the study period, frequency of study, and the base cases a Transmission Owner uses. In developing proposed Reliability Standard CIP-014-4, the drafting team balanced concerns from stakeholders regarding the burden on applicable Transmission Owners against the requirements of the SAR and the benefits to reliability from identifying and physically protecting those Transmission stations, Transmission substations, and their associated primary control centers that are critical to the reliable and secure operation of the Bulk Power System.	
Naresh Latchman - Georgia System Operations Corporation - 3	
Answer	Yes
Document Name	
Comment	
Currently, CIP-014 requires Transmission Owners to conduct planning analyses, and then have these analyses reviewed by a third party verifier. Requirement 6.1 states the the third party verifier must be a registered Planning Coordinator, Transmission Planner, Reliability Coordinator, or have transmission planning or analysis experience. Therefore, instead of a planning entity performing the study, the TO must pay a third party to verify the assessment and now at a higher frequency (36 month vs 60 month).	
Likes 0	
Dislikes 0	

Response
Thank you for your comments. The drafting team carefully considered these comments in light of the Standard Authorization Request (SAR) requirement that it correct discrepancies between the study period, frequency of study, and the base cases a Transmission Owner uses. In developing proposed Reliability Standard CIP-014-4, the drafting team balanced concerns from stakeholders regarding the burden on applicable Transmission Owners against the requirements of the SAR and the benefits to reliability from identifying and physically protecting those Transmission stations, Transmission substations, and their associated primary control centers that are critical to the reliable and secure operation of the Bulk Power System.

Nikki Carson-Marquis - Nikki Carson-Marquis On Behalf of: Theresa Allard, Minnkota Power Cooperative Inc., 1; - Nikki Carson-Marquis	
Answer	Yes
Document Name	
Comment	
MPC continues to oppose the change from a 60-month timeframe to a 36-month timeframe in proposed Requirement R1 for utilities who have not previously identified stations or substations as critical.	
Likes 0	
Dislikes 0	

Response
Thank you for your comments. The drafting team carefully considered these comments in light of the Standard Authorization Request (SAR) requirement that it correct discrepancies between the study period, frequency of study, and the base cases a Transmission Owner uses. In developing proposed Reliability Standard CIP-014-4, the drafting team balanced concerns from stakeholders regarding the burden on applicable Transmission Owners against the requirements of the SAR and the benefits to reliability from identifying and physically protecting those Transmission stations, Transmission substations, and their associated primary control centers that are critical to the reliable and secure operation of the Bulk Power System.

Donna Wood - Tri-State G and T Association, Inc. - 1	
Answer	Yes
Document Name	
Comment	
Likes 0	

Dislikes 0	
Response	
Thank you for your support.	
Tremayne Brown - ReliabilityFirst - 10	
Answer	Yes
Document Name	
Comment	
Likes 0	
Dislikes 0	
Response	
Thank you for your support.	
Karen Artola - CPS Energy - 1,3,5 - Texas RE	
Answer	Yes
Document Name	
Comment	
Thank you for your support.	
Likes 0	
Dislikes 0	
Response	
Thank you for your support.	
Sarah Miller - FirstEnergy - FirstEnergy Corporation - 4, Group Name FE Voters	
Answer	Yes
Document Name	

Comment	
Likes 0	
Dislikes 0	
Response	
Thank you for your support.	
Oshara Narangoda - Oshara Narangoda On Behalf of: Aditya Menon, Hydro One Networks, Inc., 1; - Oshara Narangoda	
Answer	Yes
Document Name	
Comment	
Likes 0	
Dislikes 0	
Response	
Thank you for your support.	
Carver Powers - Utility Services, Inc. - 4	
Answer	Yes
Document Name	
Comment	
Likes 0	
Dislikes 0	
Response	
Thank you for your support.	

John Pearson - ISO New England, Inc. - 2	
Answer	Yes
Document Name	
Comment	
Likes 0	
Dislikes 0	
Response	
Thank you for your support.	
Laura Brignola - Constellation - 6	
Answer	
Document Name	
Comment	
Not Applicable to Constellation.	
Likes 0	
Dislikes 0	
Response	
Thank you for your support.	
Dwanique Spiller - Berkshire Hathaway - NV Energy - 5	
Answer	
Document Name	
Comment	

Unknown at this time.	
Likes 0	
Dislikes 0	
Response	
Thank you for your support.	
Rachel Schuldt - Black Hills Corporation - 6, Group Name Black Hills Corporation - All Segments	
Answer	
Document Name	
Comment	
Black Hills Corporation will not comment on cost effectiveness.	
Likes 0	
Dislikes 0	
Response	
Thank you for your support.	
Andrea Koch - Edison Electric Institute - NA - Not Applicable - NA - Not Applicable	
Answer	
Document Name	
Comment	
EEI does not comment on cost.	
Likes 0	
Dislikes 0	

Response	
Thank you for your support.	
Kirsten Rowley - Midcontinent ISO, Inc. - 2, Group Name ISO/RTO Council (IRC) Standards Review Committee (SRC)	
Answer	
Document Name	
Comment	
No comment.	
Likes 0	
Dislikes 0	
Response	
Thank you for your support.	
Nick Leathers - Nick Leathers On Behalf of: David Jendras Sr, Ameren - Ameren Services, 3, 6, 1; - Nick Leathers	
Answer	
Document Name	
Comment	
Ameren has no comments on the cost effectiveness of the project.	
Likes 0	
Dislikes 0	
Response	
Thank you for your support.	
Hayk Zargaryan - Edison International - Southern California Edison Company - 1	
Answer	

Document Name	
Comment	
See comments submitted by Edison Electric Institute.	
Likes 0	
Dislikes 0	
Response	
Thank you for your support.	
Khang Le - Seminole Electric Cooperative, Inc. - 1	
Answer	
Document Name	
Comment	
See comment in Question 8	
Likes 0	
Dislikes 0	
Response	
Thank you for your support.	
Lucinda Bradshaw - Lucinda Bradshaw On Behalf of: Byron Booker, Oncor Electric Delivery, 1; - Lucinda Bradshaw	
Answer	
Document Name	
Comment	
Oncor incorporates by reference here its previous comments submitted herein on November 5, 2024 and July 21, 2025.	

Likes 0	
Dislikes 0	
Response	
Thank you for your comment. Please see responses to previous comments submitted on November 5, 2024 and July 21, 2025.	

8. Provide any additional comments for the drafting team to consider, if desired.	
Nikki Carson-Marquis - Nikki Carson-Marquis On Behalf of: Theresa Allard, Minnkota Power Cooperative Inc., 1; - Nikki Carson-Marquis	
Answer	
Document Name	
Comment	
MPC supports the MRO NERC Standard Review Forum (NSRF) comment recommending a new SAR be drafted to remove the third-party peer-review requirements or to increase the timeframes for reviews in R2/proposed R6 and R6/proposed R10.	
Likes 0	
Dislikes 0	
Response	
Thank you for your comments.	
Stephanie Kenny - Edison International - Southern California Edison Company - 6	
Answer	
Document Name	
Comment	
See EEI Comments	
Likes 0	
Dislikes 0	

Response	
Thank you for your comments.	
Kennedy Meier - Electric Reliability Council of Texas, Inc. - 2	
Answer	
Document Name	
Comment	
ERCOT joins the comments submitted by the IRC SRC and adopts them as its own.	
Likes 0	
Dislikes 0	
Response	
Thank you for your comments.	
Lucinda Bradshaw - Lucinda Bradshaw On Behalf of: Byron Booker, Oncor Electric Delivery, 1; - Lucinda Bradshaw	
Answer	
Document Name	
Comment	
Not Applicable.	
Likes 0	
Dislikes 0	
Response	
Thank you for your comments.	
Constantin Chitescu - Ontario Power Generation Inc. - 5	

Answer	
Document Name	
Comment	

OPG supports the following NPCC Regional Standards Committee's comments:

"CIP-014-4 standard:
1. R2: add BES acronym to first instance of the use of Bulk Electric System and replace with BES throughout the rest of the standard.
2. When referring to "control center" throughout the standard, are we referring to the NERC Glossary term "Control Center"? If so, please consider capitalizing the term throughout the standard.
3. R5 High VSL: refers to Part 5.2 however the primary control center is identified in Part 5.3.
Technical Rationale:
1. Replace references to CIP-002-5.1 for CIP-002-5.1a throughout the document.
2. Replace the reference to EOP-004-2 on page 18 with EOP-004-4.
3. The Technical Rationale for CIP-014 Requirement R3, Part 3.3.3 should include a statement that the use of three-phase faults at applicable stations constitutes an acceptable approach. The concern raised is that the requirement language "[a] documented justification for the Fault(s) associated with physical attack to be simulated" could be interpreted as requiring the Transmission Owner to perform an (in-depth/detailed) analysis of potential credible high-severity scenario for a physical attack even if a (generally worst-case) three-phase fault is the selected Fault type."

Likes 0	
Dislikes 0	
Response	

Thank you for your comments. See the DT's response to NPCC RSC below.

Khang Le - Seminole Electric Cooperative, Inc. - 1

Answer	
Document Name	
Comment	

It's Seminole's understanding that NERC has instated an Abeyance Program for certain Reliability Standards. It's unclear to Seminole that if a Standard is not identified in the abeyance program as to whether then it should be treated as a zero defect Standard, and therefore, Seminole requests that this

Standard be entered formally into the NERC Abeyance Program. If not put into the NERC Abeyance Program, Seminole requests that the NERC Standard Drafting Team identify that this Standard should not be treated as a zero-defect Standard.	
Likes 0	
Dislikes 0	
Response	
Thank you for the comment. NERC monitors input and comments during development to determine if a project meets criteria for development. Given there was not an indication that debates over compliance risk would lead to an inability to achieve consensus on requirements language, the DT has been informed that NERC has determined that CIP-014-4 is not appropriate for compliance abeyance.	
Lori Frisk - Lori Frisk On Behalf of: Hillary Creurer, Allete - Minnesota Power, Inc., 1; - Lori Frisk	
Answer	
Document Name	
Comment	
Minnesota Power supports the MRO NERC Standards Review Forum's (NSRF's) comments.	
Likes 0	
Dislikes 0	
Response	
Thank you for your comments.	
Naresh Latchman - Georgia System Operations Corporation - 3	
Answer	
Document Name	
Comment	
The primary issue with this standard as it is written, and as this draft continues is the application of requirements/expectations appropriate for the Transmission Planner/Planning Coordinator function to the Transmission Owner instead. Developing steady-state and dynamic simulation criteria is a planning function and should not be required of a Transmission Owner. The sub-requirements (of R3) go further into addressing what a transmission	

planning study should include but applies this requirement incorrectly to the Transmission owner. The intent of R3 is more appropriately applicable to the TPL body of standards. More appropriately, CIP-014 should reference output from a study performed in accordance with a clearly defined TPL requirement for an extreme event involving the loss of an applicable Transmission station(s) or substation(s).

This reduces clarity on the types of studies to be performed to assess the extreme events identified in this standard. The revisions may follow the scope of the SAR but this fundamental flaw is still an issue.

Regarding R6:

With an attempt at clarifying study criteria, though they should be applied to the appropriate planning entity, there is no reason to maintain a requirement for an unaffiliated third party to perform a verification of a transmission planning analysis associated with the risk assessment. Instead of requiring planning entities be the third party verifier, they should just perform the study under clearly defined requirements in a TPL standard and communicate this information to the Transmission Owner. It is also important to note the third party verifying the risk assessment for this physical security standard is not required to have expertise in that area according to this requirement. Additionally, the SDT should consider removing the Reliability Coordinator as a potential third party verifier as that function does not perform the type of analysis being sought in this standard.

Additional Comment:

The analysis outlined in the CIP-014 standard is an evaluation of an extreme event and is based on transmission planning analysis. It would seem NERC and the industry are potentially missing an opportunity to consolidate requirements around the evaluation of extreme events better than what is currently provided for in the current construct of the existing and planned Reliability Standards. Consideration should be given to provide a better pathway to house long-term planning requirements around extreme event analysis within the TPL standards (not CIP) and specify the reliability analyses needed, the parameters for determining reliability, expectations for corrective actions, and the communication path from planning to owners and others with a reliability-related need for this information. The planning assessment/CAP required by TPL-001 is already required to be distributed to applicable owners. Clarifying the extreme event expectations in TPL-001 (or other planning standard) to specify that evaluating the substation outage outlined in CIP-014 every 36 months is one pathway to better align standard requirements with the appropriate entity.

Likes 0	
Dislikes 0	

Response

Thank you for your comments. The SAR did not allow for the drafting team to add additional responsible entities such as TPs and PCs. A new SAR will be required for this change. If a risk assessment identifies a transmission station or transmission substation as causing instability, uncontrolled separation, or Cascading within an Interconnection when rendered inoperable or damaged, then the TO can chose to forego future assessments for that substation, provided Requirements R7 through R10 continued to be adhered to. The TO has the choice of which order in which to perform the dynamic and steady-state simulations.	
Jodi Yeary - AEP - 3	
Answer	
Document Name	
Comment	
AEP recommends adding a Moderate VSL for R2 as follows (change indicated in ***bold***): Moderate VSL: "The Transmission Owner with applicable Transmission station(s) or Transmission substation(s) identified in Requirement R1 ***failed to identify one*** existing Bulk Electric System Transmission station(s) and Bulk Electric System Transmission substation(s), irrespective of ownership, within 1500 feet or 457 meters (the shortest distance, measured substation fence line to substation fence line) of an applicable Transmission station or Transmission substation identified in Requirement R1." AEP also recommends adding clarification to the Severe VSL for R2 (change indicated in ***bold***): Severe VSL: "The Transmission Owner with applicable Transmission station(s) or Transmission substation(s) identified in Requirement R1 ***failed to identify any*** existing Bulk Electric System Transmission station(s) and Bulk Electric System Transmission substation(s), irrespective of ownership, within 1500 feet or 457 meters (the shortest distance, measured substation fence line to substation fence line) of an applicable Transmission station or Transmission substation identified in Requirement R1." Finally, AEP recommends removing the phrase "any evidence for" from the Severe VSL for R4 to correct a typographical error. The revised language would read (remove **italisized*)*: "…for more than 75% and less than or equal to 100% of **any evidence for of** jointly owned applicable Transmission station(s) and Transmission substation(s)."	
Likes 0	

Dislikes 0	
Response	
Thank you for your comments. The DT believes the R2 Severe VSL is adequate and correct. The DT agrees to the edit for the R4 Severe VSL.	
Ruida Shu - Northeast Power Coordinating Council - 10, Group Name NPCC RSC	
Answer	
Document Name	
Comment	
CIP-014-4 standard: 1. R2: add BES acronym to first instance of the use of Bulk Electric System and replace with BES throughout the rest of the standard. 2. When referring to "control center" throughout the standard, are we referring to the NERC Glossary term "Control Center"? If so, please consider capitalizing the term throughout the standard. 3. R5 High VSL: refers to Part 5.2 however the primary control center is identified in Part 5.3. Technical Rationale: 1. Replace references to CIP-002-5.1 for CIP-002-5.1a throughout the document. 2. Replace the reference to EOP-004-2 on page 18 with EOP-004-4. 3. The Technical Rationale for CIP-014 Requirement R3, Part 3.3.3 should include a statement that the use of three-phase faults at applicable stations constitutes an acceptable approach. The concern raised is that the requirement language "[a] documented justification for the Fault(s) associated with physical attack to be simulated" could be interpreted as requiring the Transmission Owner to perform an (in-depth/detailed) analysis of potential credible high-severity scenario for a physical attack even if a (generally worst-case) three-phase fault is the selected Fault type.	
Likes 0	
Dislikes 0	
Response	
Thank you for your comments. The DT agrees with the BES acronym comment and will make changes. The term "control center" as used in both CIP-014-3 and CIP-014-4 is intentionally general and thus is not referring to the NERC Glossary term. The R5 High VSL reference to Part 5.2 is indeed a typo and will be changed to 5.3. Similarly, the CIP-002-5.1 and EOP-004-2 references will be corrected.	

Nick Leathers - Nick Leathers On Behalf of: David Jendras Sr, Ameren - Ameren Services, 3, 6, 1; - Nick Leathers	
Answer	
Document Name	
Comment	
Please provide specificity around whether stations or substations with multiple BES buses of multiple voltages are considered one station/substation or one station/substation plus a proximate station/substation.	
Likes 0	
Dislikes 0	
Response	
Thank you for your comments. The DT believes that stations or substations with multiple BES buses of multiple voltages should generally be considered one station/substation, particularly if they are within one fenceline and electrically connected.	
Jodirah Green - ACES Power Marketing - 1,3,4,5,6 - MRO,WECC,Texas RE,SERC,RF, Group Name ACES Collaborators	
Answer	
Document Name	
Comment	
ACES would like to thank the DT for their hard work and allowing us to comment on this project.	
Likes 0	
Dislikes 0	
Response	
Thank you for your involvement and support.	
Kirsten Rowley - Midcontinent ISO, Inc. - 2, Group Name ISO/RTO Council (IRC) Standards Review Committee (SRC)	
Answer	
Document Name	

Comment	
The IRC SRC notes that Criterion 3 in Attachment 1 references Facilities identified by the Planning Coordinator as critical to the derivation of an Interconnection Reliability Operating Limit (IROL). However, under FAC-014-3, Planning Coordinators no longer develop IROLs. The SRC recommends that Criterion 3 be updated accordingly to remove the reference to the Planning Coordinator. The IRC SRC also recommends a new SAR could be developed to remove Requirement R6 from the proposed CIP-014-4 standard. The new requirements proposed in CIP-014-4 Requirements R1-R5 outline necessary specifics for more meaningful risk assessments, which reduces the need for unaffiliated third-party verification, especially given that auditors are also directed to apply various methods to test the validity of station identifications under current CIP-014-3 Requirement R1. Note: AESO, ISO-NE, and SPP abstain from these comments.	
Likes 0	
Dislikes 0	
Response	
Thank you for your comments. As the CIP-014-4 SAR did not address the IROL language issue, it will need to be addressed via existing NERC Project 2021-03 or via a new SAR. Similarly, the CIP-014-4 SAR did not address third-party verification, and as such would also need to be addressed via a new SAR.	
Andrea Koch - Edison Electric Institute - NA - Not Applicable - NA - Not Applicable	
Answer	
Document Name	
Comment	
N/A	
Likes 0	
Dislikes 0	

Response	
Thank you.	
Dan Perry - TXNM Energy - 1,3,5 - WECC,Texas RE	
Answer	
Document Name	
Comment	
TXNM Energy recommends removal of “Planning Coordinator, or Transmission Planner” from item 3 in Attachment 1. Per FAC-014-3 R5.2.2 and R5.2.4 it is the RC that provide the transmission facilities that are critical to the derivation of the IROL and associated critical contingencies.	
Likes 0	
Dislikes 0	
Response	
Thank you for your comments. See the DT’s previous response regarding the IROL issue.	
Alan Kloster - Alan Kloster On Behalf of: Jeremy Harris, Evergy, 3, 5, 1, 6; Kevin Frick, Evergy, 3, 5, 1, 6; Marcus Moor, Evergy, 3, 5, 1, 6; Tiffany Lake, Evergy, 3, 5, 1, 6; - Alan Kloster	
Answer	
Document Name	
Comment	
Evergy supports and incorporates by reference the comments of the MRO NSRF for question #8.	
Likes 0	
Dislikes 0	
Response	
Thank you for your comments.	
Joseph Gatten - Great River Energy - 3, Group Name Great River Energy	

Answer	
Document Name	
Comment	
GRE thanks the drafting team for their work and dedication.	
Likes 0	
Dislikes 0	
Response	
Thank you for your involvement and support.	
Matt Bullard - Dominion - Dominion Virginia Power - 3, Group Name Dominion Energy	
Answer	
Document Name	
Comment	
The draft standard appears to focus on unlikely scenarios and would require significant planning time to plan for and analyze them, with limited corresponding reliability benefit. It should instead place greater emphasis on practical resilience measures for applicable substations that address more realistic and emerging threats.	
Likes 0	
Dislikes 0	
Response	
Thank you for your comments. The DT believes that the language in the CIP-014-4 4th posting, e.g., the use of “credible high-severity physical attack’, properly focuses the standard on physical attack events that are plausible and worthy of concern to BES reliability.	
Chantal Mazza - Chantal Mazza On Behalf of: Junji Yamaguchi, Hydro-Quebec (HQ), 1, 5; Nicolas Turcotte, Hydro-Quebec (HQ), 1, 5; - Chantal Mazza	
Answer	
Document Name	

Comment	
CIP-014-4 standard: 1. R2: add BES acronym to first instance of the use of Bulk Electric System and replace with BES throughout the rest of the standard. 2. When referring to “control center” throughout the standard, are we referring to the NERC Glossary term “Control Center”? If so, please consider capitalizing the term throughout the standard. 3. R5 High VSL: refers to Part 5.2 however the primary control center is identified in Part 5.3. Technical Rationale: 1. Replace references to CIP-002-5.1 for CIP-002-5.1a throughout the document. 2. Replace the reference to EOP-004-2 on page 18 with EOP-004-4. 3. The Technical Rationale for CIP-014 Requirement R3, Part 3.3.3 should include a statement that the use of three-phase faults at applicable stations constitutes an acceptable approach. The concern raised is that the requirement language “[a] documented justification for the Fault(s) associated with physical attack to be simulated” could be interpreted as requiring the Transmission Owner to perform an (in-depth/detailed) analysis of potential credible high-severity scenario for a physical attack even if a (generally worst-case) three-phase fault is the selected Fault type.	
Likes 0	
Dislikes 0	
Response	
Thank you for your comments. Please see the above response for these issues.	
Zahid Qayyum - New York Power Authority - 5	
Answer	
Document Name	
Comment	
NYPA Supports NPCC RSC TFIST Comments.	
Likes 0	
Dislikes 0	

Response	
Thank you for your comments.	
Daniel Valle - New York Power Authority - 1	
Answer	
Document Name	
Comment	
NYPA supports the comments submitted by NPCC RSC.	
Likes 0	
Dislikes 0	
Response	
Thank you for your comments.	
Katrina Lyons - Georgia System Operations Corporation - 4	
Answer	
Document Name	
Comment	
The primary issue with this standard as it is written, and as this draft continues is the application of requirements/expectations appropriate for the Transmission Planner/Planning Coordinator function to the Transmission Owner instead. Developing steady-state and dynamic simulation criteria is a planning function and should not be required of a Transmission Owner. The sub-requirements (of R3) go further into addressing what a transmission planning study should include but applies this requirement incorrectly to the Transmission owner. The intent of R3 is more appropriately applicable to the TPL body of standards. More appropriately, CIP-014 should reference output from a study performed in accordance with a clearly defined TPL requirement for an extreme event involving the loss of an applicable Transmission station(s) or substation(s). This reduces clarity on the types of studies to be performed to assess the extreme events identified in this standard. The revisions may follow the scope of the SAR but this fundamental flaw is still an issue.	

Regarding R6: With an attempt at clarifying study criteria, though they should be applied to the appropriate planning entity, there is no reason to maintain a requirement for an unaffiliated third party to perform a verification of a transmission planning analysis associated with the risk assessment. Instead of requiring planning entities be the third party verifier, they should just perform the study under clearly defined requirements in a TPL standard and communicate this information to the Transmission Owner. It is also important to note the third party verifying the risk assessment for this physical security standard is not required to have expertise in that area according to this requirement. Additionally, the SDT should consider removing the Reliability Coordinator as a potential third party verifier as that function does not perform the type of analysis being sought in this standard. Additional Comment: The analysis outlined in the CIP-014 standard is an evaluation of an extreme event and is based on transmission planning analysis. It would seem NERC and the industry are potentially missing an opportunity to consolidate requirements around the evaluation of extreme events better than what is currently provided for in the current construct of the existing and planned Reliability Standards. Consideration should be given to provide a better pathway to house long-term planning requirements around extreme event analysis within the TPL standards (not CIP) and specify the reliability analyses needed, the parameters for determining reliability, expectations for corrective actions, and the communication path from planning to owners and others with a reliability-related need for this information. The planning assessment/CAP required by TPL-001 is already required to be distributed to applicable owners. Clarifying the extreme event expectations in TPL-001 (or other planning standard) to specify that evaluating the substation outage outlined in CIP-014 every 36 months is one pathway to better align standard requirements with the appropriate entity.	
Likes 0	
Dislikes 0	
Response	
Thank you for your comments. The SAR did not allow for the drafting team to add additional responsible entities such as TPs and PCs. A new SAR will be required for this change. If a risk assessment identifies a transmission station or transmission substation as causing instability, uncontrolled separation, or Cascading within an Interconnection when rendered inoperable or damaged, then the TO can chose to forego future assessments for that substation, provided Requirements R7 through R10 continued to be adhered to. The TO has the choice of which order in which to perform the dynamic and steady-state simulations.	
Amy Casuscelli - Xcel Energy, Inc. - 1,3,5,6 - MRO,WECC	
Answer	
Document Name	
Comment	

Additional clarity regarding obligations for "proximate" facilities is needed. We suggest adding clarity that R8-R10 only applies to company facilities, not proximate facilties.	
Likes 0	
Dislikes 0	
Response	
Thank you for your comments. The DT notes that Requirements R8-R10 were not modified under this project, other than to do renumbering. Be that as it may, the DT believes that the wording in Requirements R8-10, in particular through referencing Requirement R5, makes it clear that the application of Requirements R8-R10 is to applicable Transmission station(s) and Transmission substation(s) identified in Requirement R1, and not to proximate Transmission station(s) and Transmission substation(s).	
Tamarra Hardie - Public Utility District No. 1 of Chelan County - 6, Group Name CHPD	
Answer	
Document Name	
Comment	
N/A	
Likes 0	
Dislikes 0	
Response	
Thank you.	
Sarah Miller - FirstEnergy - FirstEnergy Corporation - 4, Group Name FE Voters	
Answer	
Document Name	
Comment	

None	
Likes 0	
Dislikes 0	
Response	
Thank you.	
Jeffrey Streifling - NB Power Corporation - 1	
Answer	
Document Name	
Comment	
CIP-014-4 standard: 1. R2: add BES acronym to first instance of the use of Bulk Electric System and replace with BES throughout the rest of the standard. 2. When referring to “control center” throughout the standard, are we referring to the NERC Glossary term “Control Center”? If so, please consider capitalizing the term throughout the standard. 3. R5 High VSL: refers to Part 5.2 however the primary control center is identified in Part 5.3. Technical Rationale: 1. Replace references to CIP-002-5.1 for CIP-002-5.1a throughout the document. 2. Replace the reference to EOP-004-2 on page 18 with EOP-004-4.	
Likes 0	
Dislikes 0	
Response	

Thank you for your comments. Please see the above response for these issues.	
Stephen Stafford - Stephen Stafford On Behalf of: Greg Davis, Georgia Transmission Corporation, 1; - Stephen Stafford	
Answer	
Document Name	
Comment	

The primary issue with this standard as it is written, and as this draft continues is the application of requirements/expectations appropriate for the Transmission Planner/Planning Coordinator function to the Transmission Owner instead. Developing steady-state and dynamic simulation criteria is a planning function and should not be required of a Transmission Owner. The sub-requirements (of R3) go further into addressing what a transmission planning study should include but applies this requirement incorrectly to the Transmission owner. The intent of R3 is more appropriately applicable to the TPL body of standards. More appropriately, CIP-014 should reference output from a study performed in accordance with a clearly defined TPL requirement for an extreme event involving the loss of an applicable Transmission station(s) or substation(s).

This reduces clarity on the types of studies to be performed to assess the extreme events identified in this standard. The revisions may follow the scope of the SAR but this fundamental flaw is still an issue.

Regarding R6:

With an attempt at clarifying study criteria, though they should be applied to the appropriate planning entity, there is no reason to maintain a requirement for an unaffiliated third party to perform a verification of a transmission planning analysis associated with the risk assessment. Instead of requiring planning entities be the third party verifier, they should just perform the study under clearly defined requirements in a TPL standard and communicate this information to the Transmission Owner. It is also important to note the third party verifying the risk assessment for this physical security standard is not required to have expertise in that area according to this requirement. Additionally, the SDT should consider removing the Reliability Coordinator as a potential third party verifier as that function does not perform the type of analysis being sought in this standard.

Additional Comment:

The analysis outlined in the CIP-014 standard is an evaluation of an extreme event and is based on transmission planning analysis. It would seem NERC and the industry are potentially missing an opportunity to consolidate requirements around the evaluation of extreme events better than what is currently provided for in the current construct of the existing and planned Reliability Standards. Consideration should be given to provide a better pathway to house long-term planning requirements around extreme event analysis within the TPL standards (not CIP) and specify the reliability analyses needed, the parameters for determining reliability, expectations for corrective actions, and the communication path from planning to owners and others with a reliability-related need for this information. The planning assessment/CAP required by TPL-001 is already required to be distributed to applicable

owners. Clarifying the extreme event expectations in TPL-001 (or other planning standard) to specify that evaluating the substation outage outlined in CIP-014 every 36 months is one pathway to better align standard requirements with the appropriate entity.	
Likes 0	
Dislikes 0	
Response	
Thank you for your comments. The SAR did not allow for the drafting team to add additional responsible entities such as TPs and PCs. A new SAR will be required for this change. If a risk assessment identifies a transmission station or transmission substation as causing instability, uncontrolled separation, or Cascading within an Interconnection when rendered inoperable or damaged, then the TO can chose to forego future assessments for that substation, provided Requirements R7 through R10 continued to be adhered to. The TO has the choice of which order in which to perform the dynamic and steady-state simulations.	
Kelly Heims - Central Iowa Power Cooperative - 1	
Answer	
Document Name	
Comment	
Central Iowa Power Cooperative supports the MRO's NERC Standards Review Forum (NSRF) and ACES comments for Question 8.	
Likes 0	
Dislikes 0	
Response	
Thank you for your comments.	
Anna Martinson - MRO - 1,2,3,4,5,6 - MRO, Group Name MRO Group	
Answer	
Document Name	2023-06-unofficial_comment_form_03312026 NSRF.docx
Comment	

Understanding that R6, formerly R2 under CIP-014-3, is out of scope for this SAR, MRO NSRF requests that the drafting team make a recommendation to the Standards Committee based on industry feedback that a SAR be drafted to remove R6 as an administrative burden. It should no longer be needed, given that this project has added the necessary specifics required for a meaningful risk assessment, diminishing the need for third-party verification. Also, there has been anecdotal experience as an industry that auditors have audited the (CIP-014-3) R1 risk assessments directly without relying on the R2 third-party verification as directed by the RSAW. If (CIP-014-4) R6 is to be retained, 90 calendar days for completing R6 in R6.2 is proving to be tight for some larger entities, which request extension to 180 calendar days (which would be much easier to calculate as six calendar months to avoid getting tripped up on 28/30/31-day months). The MRO NSRF requests that the requirement R10 for a third-party review of the physical security plan be considered for removal as part of the same SAR, this requirement similarly adds administrative burden without benefit to the BES.	
Likes 0	
Dislikes 0	
Response	
Thank you for your comments. See the DT's above response regarding third party verification issues.	
Alison Nickells - NiSource - Northern Indiana Public Service Co. - 1	
Answer	
Document Name	
Comment	
No comments.	
Likes 0	
Dislikes 0	
Response	
Thank you.	
Matthew Nicklin - Southern Illinois Power Cooperative - 1,5 - SERC	
Answer	
Document Name	

Comment	
SIPC would like to thank the DT for their hard work and allowing us to comment on this project.	
Likes 0	
Dislikes 0	
Response	
Thank you for your support and involvement.	
Rebika Yitna - Rebika Yitna On Behalf of: Roger Brand, MEAG Power, 3, 1; - Rebika Yitna	
Answer	
Document Name	
Comment	
No additional comments	
Likes 0	
Dislikes 0	
Response	
Thank you.	
Amy Wilke - American Transmission Company, LLC - 1	
Answer	
Document Name	
Comment	
ATC has no additional comments, and thanks the drafting team for the approach taken. ATC has more conservative methodologies for most requirements that go above and beyond these new obligations and accomplishes these additional requirements through the implementation of our standards.	
Likes 0	

Dislikes 0	
Response	
Thank you for your support and involvement.	
Ken Bartz - MGE Energy - Madison Gas and Electric Co. - 3	
Answer	
Document Name	
Comment	
Madison Gas and Electric supports any responses and comments of the MRO NSRF and/or TAPS/Utility Services. MGE engages regularly with those trade partners as they formulate voting positions and comments.	
Likes 0	
Dislikes 0	
Response	
Thank you for your comments.	
Donna Wood - Tri-State G and T Association, Inc. - 1	
Answer	
Document Name	
Comment	
Tri-State has no additional comments.	
Likes 0	
Dislikes 0	
Response	
Thank you.	
Laura Brignola - Constellation - 6	

Answer	
Document Name	
Comment	
Not Applicable to Constellation.	
Likes 0	
Dislikes 0	
Response	
Thank you.	

Standard Development Timeline

This section is maintained by the drafting team during the development of the standard and will be removed when the standard is adopted by the NERC Board of Trustees (Board).

Description of Current Draft

CIP-014-4 is posted for a 45-day formal comment period with additional ballot.

Completed Actions	Date
Standards Committee approved Standard Authorization Request for posting	June 21, 2023
Standard Authorization Request posted for comment	July 26 – August 24, 2023
Accepted Revised Standard Authorization Request	January 17, 2024
45-day formal or informal comment period with ballot	May 20 – July 3, 2024
45-day formal or informal comment period with additional ballot	September 23 – November 6, 2024
45-day formal comment period with additional ballot	June 6 – July 21, 2025
45-day formal comment period with additional ballot	March 31 – May 14, 2026

Anticipated Actions	Date
10-day final ballot	May 28 – June 8, 2026
Board adoption	June 17, 2026

New or Modified Term(s) Used in NERC Reliability Standards

This section includes all new or modified terms used in the proposed standard that will be included in the *Glossary of Terms Used in NERC Reliability Standards* upon applicable regulatory approval. Terms used in the proposed standard that are already defined and are not being modified can be found in the *Glossary of Terms Used in NERC Reliability Standards*. The new or revised terms listed below will be presented for approval along with the proposed standard. Upon Board adoption, this section will be removed.

Term(s):

None.

A. Introduction

1. **Title:** Physical Security

2. **Number:** CIP-014-4

3. **Purpose:** To identify and protect Transmission stations and Transmission substations, and their associated primary control centers, that if rendered inoperable or damaged due to a physical attack, could result in instability, uncontrolled separation, or Cascading within an Interconnection.

4. **Applicability:**

   4.1. Functional Entities:

   4.1.1. Transmission Owner that owns or jointly owns one or more Transmission stations or Transmission substations that meet the applicability criteria of Attachment 1.

   4.1.2. Transmission Operator

   Exemption: Facilities in a "protected area," as defined in 10 C.F.R. § 73.2, within the scope of a security plan approved or accepted by the Nuclear Regulatory Commission are not subject to this Standard; or Facilities within the scope of a security plan approved or accepted by the Canadian Nuclear Safety Commission are not subject to this Reliability Standard.

5. **Effective Date:** See Implementation Plan for CIP-014-4.

B. Requirements and Measures

R1. Each Transmission Owner shall, at least once every 36 calendar months, identify each applicable Transmission station and Transmission substation meeting any of the criteria in Attachment 1 that is either existing or planned to be in service within 36 calendar months. *[Violation Risk Factor: High; Time-Horizon: Long-term Planning]*

M1. Examples of evidence may include, but are not limited to, dated written or electronic documentation of the Transmission station(s) and Transmission substation(s) (existing and those planned to be in service within 36 calendar months) that meet any of the criteria in Attachment 1.

R2. Each Transmission Owner with applicable Transmission station(s) or Transmission substation(s) identified in Requirement R1 shall identify proximate existing Bulk Electric System (BES) Transmission station(s) and BES Transmission substation(s), irrespective of ownership, within 1500 feet or 457 meters (the shortest distance, measured substation fence line to substation fence line) of an applicable Transmission station or Transmission substation identified in Requirement R1. *[Violation Risk Factor: Medium; Time-Horizon: Long-term Planning]*

M2. Examples of evidence may include, but are not limited to, dated written or electronic documentation of the BES Transmission stations or BES Transmission substations identified in Requirement R2.

R3. Each Transmission Owner shall have a documented risk assessment methodology for evaluating the loss of each applicable Transmission station or Transmission substation identified in Requirement R1. The methodology shall include, at a minimum, the following: *[Violation Risk Factor: High; Time-Horizon: Long-term Planning]*

3.1. Documented criteria for assessing instability, uncontrolled separation, or Cascading within an Interconnection. The criteria shall include, at a minimum, technically justified thresholds identifying unacceptable generation and load loss within an Interconnection.

3.2. A provision that steady-state and dynamic simulations shall each be performed using at a minimum one System peak Load case and one System Off-Peak Load case.

3.3. Specifications for simulations at each applicable Transmission station or Transmission substation identified in accordance with Requirement R1 and, if applicable, at each associated proximate existing BES Transmission station(s) and BES Transmission substation(s) identified in accordance with Requirement R2, that include:

3.3.1. At the applicable Transmission station or Transmission substation:

3.3.1.1. Prior loss of communication and Protection Systems;

3.3.1.2. Application of a Fault or Faults; and

3.3.1.3. Delayed (remote) clearing times shall be used unless otherwise technically substantiated.

3.3.2. At each proximate existing BES station(s) and BES substation(s), as applicable:

3.3.2.1. Application of a Fault or Faults, either simultaneous with or following the Fault or Faults applied under Part 3.3.1.2; and

3.3.2.2. Normal clearing times shall be used unless otherwise technically substantiated.

3.3.3. A documented justification for the Fault(s) associated with physical attack to be simulated. A single justification may be used for multiple locations. The justification shall include at a minimum:

3.3.3.1. The type of credible high-severity physical attack considered; and

3.3.3.2. The type of Fault(s) selected based upon the attack considered.

3.3.4. Removal of all Elements that Protection Systems and other controls are expected to automatically disconnect.

3.3.5. Actual or more conservative clearing times shall be used.

M3. Each Transmission Owner shall provide dated evidence, such as electronic or hard copies, of a risk assessment methodology satisfying Requirement R3.

R4. Each Transmission Owner with applicable Transmission station(s) and Transmission substation(s) identified in Requirement R1 jointly owned by multiple Transmission Owners shall coordinate with each appropriate Transmission Owner(s) to determine and document their individual and joint responsibilities under Requirement R3 and Requirement R5. *[Violation Risk Factor: Medium; Time-Horizon: Operations Planning, Long-term Planning]*

M4. Examples of acceptable evidence may include, but are not limited to, dated documentation, such as meeting minutes, agreements, and email correspondence, that identifies that agreement has been reached on individual and joint responsibilities for performing the required risk assessments.

R5. At least once every 36 calendar months, each Transmission Owner shall perform a risk assessment to identify applicable Transmission station(s) and Transmission substation(s) identified in Requirement R1, that if rendered inoperable or damaged could result in instability, uncontrolled separation, or Cascading within an Interconnection, using the methodology established in Requirement R3. Jointly owned Transmission station(s) and Transmission substation(s) shall be assessed according to the responsibilities documented under Requirement R4. If proximate BES station(s) and BES Transmission substation(s) were identified in Requirement R2, they shall be included in the risk assessment according to Requirement R3, Part 3.3. *[Violation Risk Factor: High; Time-Horizon: Operations Planning, Long-term Planning]*

5.1. If during a risk assessment, a Transmission station or Transmission substation is identified in either the dynamic or steady-state simulation as resulting in instability, uncontrolled separation, or Cascading within an Interconnection when rendered inoperable or damaged, then no further simulation is required.

5.2. If a previous risk assessment has identified a Transmission station or Transmission substation as causing instability, uncontrolled separation, or Cascading within an Interconnection when rendered inoperable or damaged, then the Transmission Owner may forgo additional assessments on that Transmission station or Transmission substation. Requirement R5, Part 5.3 and Requirement R7 through Requirement R10 still apply to that Transmission station or Transmission substation until a new risk assessment demonstrates otherwise.

5.3. The Transmission Owner shall identify the primary control center that operationally controls each Transmission station or Transmission substation identified as resulting in instability, uncontrolled separation, or Cascading within an Interconnection when rendered inoperable or damaged in the Requirement R5 risk assessment.

M5. Examples of acceptable evidence may include, but are not limited to, dated written or electronic documentation of the risk assessment satisfying Requirement R5 including the identified Transmission station(s) or Transmission substation(s). For Requirement R5, Part 5.3, examples of acceptable evidence may include, but are not limited to, dated written or electronic documentation of the identification of the primary control center that operationally controls each identified Transmission station or Transmission substation.

R6. Each Transmission Owner shall have an unaffiliated third party verify the risk assessment performed under Requirement R5. The verification may occur concurrently with or after the risk assessment performed under Requirement R5. *[Violation Risk Factor: Medium; Time-Horizon: Long-term Planning]*

6.1. Each Transmission Owner shall select an unaffiliated verifying entity that is either:

- A registered Planning Coordinator, Transmission Planner, or Reliability Coordinator; or
- An entity that has transmission planning or analysis experience.

6.2. The unaffiliated third-party verification shall verify the Transmission Owner's risk assessment performed under Requirement R5, which may include recommendations for the addition or deletion of a Transmission station(s) or Transmission substation(s). The Transmission Owner shall ensure the verification is completed within 90 calendar days following the completion of the Requirement R5 risk assessment.

6.3. If the unaffiliated verifying entity recommends that the Transmission Owner add a Transmission station(s) or Transmission substation(s) to, or remove a Transmission station or Transmission substation from, its identification under Requirement R5, the Transmission Owner shall either, within 60 calendar days of completion of the verification, for each recommended addition or removal of a Transmission station or Transmission substation:

- Modify its identification under Requirement R5 consistent with the recommendation; or
- Document the technical basis for not modifying the identification in accordance with the recommendation.

6.4. Each Transmission Owner shall implement procedures, such as the use of non-disclosure agreements, for protecting sensitive or confidential information made available to the unaffiliated third-party verifier and to protect or exempt sensitive or confidential information developed pursuant to this Reliability Standard from public disclosure.

M6. Examples of acceptable evidence may include, but are not limited to, dated written or electronic documentation that the Transmission Owner completed an unaffiliated third party verification of the Requirement R5 risk assessment and satisfied all of the applicable provisions of Requirement R6, including, if applicable, documenting the technical basis for not modifying the identification in Requirements R1, R2, R3, R4, and R5 as specified under Part 6.3. Additionally, examples of evidence may include, but are not limited to, written or electronic documentation of procedures to protect information under Part 6.4.

R7. For a primary control center(s) identified by the Transmission Owner according to Requirement R5, Part 5.3 that a) operationally controls an identified Transmission station or Transmission substation verified according to Requirement R6, and b) is not under the operational control of the Transmission Owner: the Transmission Owner shall, within seven calendar days following completion of Requirement R6, notify the Transmission Operator that has operational control of the primary control center of such identification and the date of completion of Requirement R6. *[Violation Risk Factor: Lower; Time-Horizon: Long-term Planning]*

7.1. If a Transmission station or Transmission substation previously identified under Requirements R1 and R5 and verified according to Requirement R6 is removed from the identification during a subsequent risk assessment performed according to Requirement R5 or a verification according to Requirement R6, then the Transmission Owner shall, within seven calendar days following the verification or the subsequent risk assessment, notify the Transmission Operator that has operational control of the primary control center of the removal.

M7. Examples of acceptable evidence may include, but are not limited to, written or electronic notifications or communications that the Transmission Owner notified each Transmission Operator, as applicable, according to Requirement R7.

R8. Each Transmission Owner that identified a Transmission station, Transmission substation, or a primary control center in Requirement R5 and verified according to Requirement R6, and each Transmission Operator notified by a Transmission Owner according to Requirement R7, shall conduct an evaluation of the potential threats and vulnerabilities of a physical attack to each of their respective Transmission station(s), Transmission substation(s), and primary control center(s) identified in Requirement R5 and verified according to Requirement R6. The evaluation shall consider the following: *[Violation Risk Factor: Medium; Time-Horizon: Operations Planning, Long-term Planning]*

8.1. Unique characteristics of the identified and verified Transmission station(s), Transmission substation(s), and primary control center(s);

8.2. Prior history of attack(s) on similar facilities taking into account the frequency, geographic proximity, and severity of past physical security related events; and

8.3. Intelligence or threat warnings received from sources such as law enforcement, the Electric Reliability Organization (ERO), the Electricity Sector Information Sharing and Analysis Center (E-ISAC), U.S. federal and/or Canadian governmental agencies, or their successors.

M8. Examples of evidence may include, but are not limited to, dated written or electronic documentation that the Transmission Owner or Transmission Operator conducted an evaluation of the potential threats and vulnerabilities of a physical attack to their respective Transmission station(s), Transmission substation(s), and primary control center(s) as specified in Requirement R8.

R9. Each Transmission Owner that identified a Transmission station, Transmission substation, or primary control center in Requirement R5 and verified according to Requirement R6, and each Transmission Operator notified by a Transmission Owner according to Requirement R7, shall develop and implement a documented physical security plan(s) that covers their respective Transmission station(s), Transmission substation(s), and primary control center(s). The physical security plan(s) shall be developed within 120 calendar days following the completion of Requirement R6 and executed according to the timeline specified in the physical security plan(s). The physical security plan(s) shall include the following attributes: [*Violation Risk Factor*: *High; Time-Horizon: Long-term Planning*]

9.1. Resiliency or security measures designed collectively to deter, detect, delay, assess, communicate, and respond to potential physical threats and vulnerabilities identified during the evaluation conducted in Requirement R8.

9.2. Law enforcement contact and coordination information.

9.3. A timeline for executing the physical security enhancements and modifications specified in the physical security plan.

9.4. Provisions to evaluate evolving physical threats, and their corresponding security measures, to the Transmission station(s), Transmission substation(s), or primary control center(s).

M9. Examples of evidence may include, but are not limited to, dated written or electronic documentation of its physical security plan(s) that covers their respective identified and verified Transmission station(s), Transmission substation(s), and primary control center(s) as specified in Requirement R6, and additional evidence demonstrating execution of the physical security plan according to the timeline specified in the physical security plan.

R10. Each Transmission Owner that identified a Transmission station, Transmission substation, or primary control center in Requirement R5 and verified according to Requirement R6, and each Transmission Operator notified by a Transmission Owner according to Requirement R7, shall have an unaffiliated third party review the evaluation performed under Requirement R8 and the security plan(s) developed under Requirement R9. The review may occur concurrently with or after completion of the evaluation performed under Requirement R8 and the security plan development under Requirement R9. *[Violation Risk Factor: Medium; Time-Horizon: Long-term Planning]*

10.1. Each Transmission Owner and Transmission Operator shall select an unaffiliated third-party reviewer from the following:

- An entity or organization with electric industry physical security experience and whose review staff has at least one member who holds either a Certified Protection Professional (CPP) or Physical Security Professional (PSP) certification;
- An entity or organization approved by the ERO;
- A governmental agency with physical security expertise; or
- An entity or organization with demonstrated law enforcement, government, or military physical security expertise.

10.2. The Transmission Owner or Transmission Operator, respectively, shall ensure that the unaffiliated third-party review is completed within 90 calendar days of completing the security plan(s) developed in Requirement R9. The unaffiliated third-party review may, but is not required to, include recommended changes to the evaluation performed under Requirement R8 or the security plan(s) developed under Requirement R9.

10.3. If the unaffiliated third-party reviewer recommends changes to the evaluation performed under Requirement R8 or security plan(s) developed under Requirement R9, the Transmission Owner or Transmission Operator shall, within

60 calendar days of the completion of the unaffiliated third party review, for each recommendation:

- Modify its evaluation or security plan(s) consistent with the recommendation; or
- Document the reason(s) for not modifying the evaluation or security plan(s) consistent with the recommendation.

10.4. Each Transmission Owner and Transmission Operator shall implement procedures, such as the use of non-disclosure agreements, for protecting sensitive or confidential information made available to the unaffiliated third-party reviewer and to protect or exempt sensitive or confidential information developed pursuant to this Reliability Standard from public disclosure.

M10. Examples of evidence may include, but are not limited to, written or electronic documentation that the Transmission Owner or Transmission Operator had an unaffiliated third party review the evaluation performed under Requirement R8 and the security plan(s) developed under Requirement R9 as specified in Requirement R10 including, if applicable, documenting the reasons for not modifying the evaluation or security plan(s) in accordance with a recommendation under Part 10.3. Additionally, examples of evidence may include, but are not limited to, written or electronic documentation of procedures to protect information under Part 10.4.

C. Compliance

1. Compliance Monitoring Process

1.1. Compliance Enforcement Authority: "Compliance Enforcement Authority" means NERC or the Regional Entity in their respective roles of monitoring and enforcing compliance with the NERC Reliability Standards.

1.2. Evidence Retention: The following evidence retention period(s) identify the period of time an entity is required to retain specific evidence to demonstrate compliance. For instances where the evidence retention period specified below is shorter than the time since the last audit, the Compliance Enforcement Authority may ask an entity to provide other evidence to show that it was compliant for the full-time period since the last audit.

The Transmission Owner and Transmission Operator shall keep data or evidence to show compliance, as identified below, unless directed by its Compliance Enforcement Authority to retain specific evidence for a longer period of time as part of an investigation:

The responsible entities shall retain evidence, as per Requirements R1 through R10, for three years.

If a Responsible Entity is found non-compliant, it shall keep information related to the non-compliance until mitigation is complete and approved, or for the time specified above, whichever is longer.

The CEA shall keep the last audit records and all requested and submitted subsequent audit records.

1.3. Compliance Monitoring and Enforcement Program: "Compliance Monitoring Enforcement Program" or "CMEP" means, depending on the context (1) the NERC Compliance Monitoring and Enforcement Program (Appendix 4C to the NERC Rules of Procedure) or the Commission-approved program of a Regional Entity, as applicable, or (2) the program, department or organization within NERC or a Regional Entity that is responsible for performing compliance monitoring and enforcement activities with respect to Registered Entities' compliance with Reliability Standards.

Violation Severity Levels

	Violation Severity Levels			
	Lower VSL	**Moderate VSL**	**High VSL**	**Severe VSL**
R1.	The Transmission Owner identified each applicable Transmission station(s) and Transmission substation(s) per Attachment 1, but did so after 36 calendar months, but less than or equal to 38 calendar months. OR The Transmission Owner identified each applicable Transmission station(s) and Transmission substation(s), but failed to identify less than or equal to 10% of the applicable Transmission station(s) and Transmission substation(s) per Attachment 1.	The Transmission Owner identified each applicable Transmission station(s) and Transmission substation(s) per Attachment 1, but did so after 38 calendar months, but less than or equal to 40 calendar months. OR The Transmission Owner identified each applicable Transmission station(s) and Transmission substation(s), but failed to identify more than 10% and less than or equal to 20% of the applicable Transmission station(s) and Transmission substation(s) per Attachment 1.	The Transmission Owner identified each applicable Transmission station(s) and Transmission substation(s) per Attachment 1, but did so after 40 calendar months, but less than or equal to 42 calendar months. OR The Transmission Owner identified each applicable Transmission station(s) and Transmission substation(s), but failed to identify more than 20% and less than or equal to 30% of the applicable Transmission station(s) and Transmission substation(s) per Attachment 1.	The Transmission Owner failed to identify each applicable Transmission station(s) and Transmission substation(s) per Attachment 1. OR The Transmission Owner identified each applicable Transmission station(s) and Transmission substation(s) per Attachment 1, but did so after more than 42 calendar months. OR The Transmission Owner identified each applicable Transmission station(s) and Transmission substation(s), but failed to identify more than 30% of the applicable Transmission station(s) and Transmission substation(s) per Attachment 1.

	Violation Severity Levels			
	Lower VSL	Moderate VSL	High VSL	Severe VSL
R2.	N/A	N/A	N/A	The Transmission Owner with applicable Transmission station(s) or Transmission substation(s) identified in Requirement R1 did not identify existing BES Transmission station(s) and BES Transmission substation(s), irrespective of ownership, within 1500 feet or 457 meters (the shortest distance, measured substation fence line to substation fence line) of an applicable Transmission station or Transmission substation identified in Requirement R1.
R3.	N/A	The Transmission Owner has a risk assessment methodology that failed to include one of the requirements listed in Parts 3.1 through 3.3.	The Transmission Owner has a risk assessment methodology that failed to include two of the requirements listed in Parts 3.1 through 3.3.	The Transmission Owner has a risk assessment methodology that failed to include all three of the requirements listed in Parts 3.1 through 3.3. OR The Transmission Owner does not have a risk assessment methodology.

	Violation Severity Levels			
	Lower VSL	Moderate VSL	High VSL	Severe VSL
R4.	The Transmission Owner with applicable Transmission station(s) and Transmission substation(s) identified in Requirement R1 owned by multiple Transmission Owners failed to coordinate with each appropriate Transmission Owner(s) to determine and document their individual and joint responsibilities for documenting a risk assessment methodology under Requirement R3 and for performing any required risk assessments per Requirement R5 for less than or equal to 25% of jointly owned applicable Transmission station(s) and Transmission substation(s).	The Transmission Owner with applicable Transmission station(s) and Transmission substation(s) identified in Requirement R1 owned by multiple Transmission Owners failed to coordinate with each appropriate Transmission Owner(s) to determine and document their individual and joint responsibilities for documenting a risk assessment methodology under Requirement R3 and for performing any required risk assessments per Requirement R5 for more than 25% and less than or equal to 50% of jointly owned applicable Transmission station(s) and Transmission substation(s).	The Transmission Owner with applicable Transmission station(s) and Transmission substation(s) identified in Requirement owned by multiple Transmission Owners failed to coordinate with each appropriate Transmission Owner(s) to determine and document their individual and joint responsibilities for documenting a risk assessment methodology under Requirement R3 and for performing any required risk assessments per Requirement R5 for more than 50% and less than or equal to 75% of jointly owned applicable Transmission station(s) and Transmission substation(s).	The Transmission Owner with applicable Transmission station(s) and Transmission substation(s) identified in Requirement R1 owned by multiple Transmission Owners failed to coordinate with each appropriate Transmission Owner(s) to determine and document their individual and joint responsibilities for documenting a risk assessment methodology under Requirement R3 and for performing any required risk assessments per Requirement R5 for more than 75% and less than or equal to 100% of any evidence for jointly owned applicable Transmission station(s) and Transmission substation(s).
R5.	The Transmission Owner performed a risk assessment, but did so after 36 calendar months, but less than or equal to 38 calendar months.	The Transmission Owner performed a risk assessment, but did so after 38 calendar months, but less than or equal to 40 calendar months. OR	The Transmission Owner performed a risk assessment, but did so after 40 calendar months, but less than or equal to 42 calendar months. OR	The Transmission Owner performed a risk assessment, but did so after more than 42 calendar months. OR

	Violation Severity Levels			
	Lower VSL	Moderate VSL	High VSL	Severe VSL
		The Transmission Owner performed a risk assessment inconsistent with one of the methodology requirements listed in Requirement R3, Parts 3.1 through 3.3.	The Transmission Owner performed a risk assessment inconsistent with two of the methodology requirements listed in Requirement R3, Parts 3.1 through 3.3. OR The Transmission Owner performed a risk assessment, but failed to include the primary control center identified in Part 5.2.	The Transmission Owner performed a risk assessment inconsistent with all three of the methodology requirements listed in Requirement R3, Parts 3.1 through 3.3.
R6.	The Transmission Owner had an unaffiliated third party verify the risk assessment performed under Requirement R5, but did so in more than 90 calendar days, but less than or equal to 100 calendar days following completion of Requirement R5. OR The Transmission Owner had an unaffiliated third party verify the risk assessment performed under Requirement R5 and modified or documented the technical basis	The Transmission Owner had an unaffiliated third party verify the risk assessment performed under Requirement R5, but did so more than 100 calendar days, but less than or equal to 110 calendar days following completion of Requirement R5. OR The Transmission Owner had an unaffiliated third party verify the risk assessment performed under Requirement R5 and modified or documented the technical basis for not modifying its identification	The Transmission Owner had an unaffiliated third party verify the risk assessment performed under Requirement R5, but did so more than 110 calendar days, but less than or equal to 120 calendar days following completion of Requirement R5. OR The Transmission Owner had an unaffiliated third party verify the risk assessment performed under Requirement R5 and modified or documented the technical basis	The Transmission Owner had an unaffiliated third party verify the risk assessment performed under Requirement R5, but did so more than 120 calendar days following completion of Requirement R5. OR The Transmission Owner failed to have an unaffiliated third party verify the risk assessment performed under Requirement R5. OR

	Violation Severity Levels			
	Lower VSL	Moderate VSL	High VSL	Severe VSL
	for not modifying its identification under Requirement R5 as required by Part6.3, but did so more than 60 calendar days and less than or equal to 70 calendar days from completion of the third party verification.	under Requirement R5 as required by Part 6.3, but did so more than 70 calendar days and less than or equal to 80 calendar days from completion of the third party verification.	for not modifying its identification under Requirement R5 as required by Part 6.3, but did so more than 80 calendar days from completion of the third party verification. OR The Transmission Owner had an unaffiliated third party verify the risk assessment performed under Requirement R5, but failed to modify or document the technical basis for not modifying its identification under R4 as required by Part 6.3.	The Transmission Owner had an unaffiliated third party verify the risk assessment performed under Requirement R5, but failed to implement procedures for protecting information per Part 6.4.
R7.	The Transmission Owner notified the Transmission Operator that operates the primary control center as specified in Requirement R7, but did so more than seven calendar days and less than or equal to nine calendar days following the completion of Requirement R6. OR	The Transmission Owner notified the Transmission Operator that operates the primary control center as specified in Requirement R7, but did so more than nine calendar days and less than or equal to 11 calendar days following the completion of Requirement R6. OR	The Transmission Owner notified the Transmission Operator that operates the primary control center as specified in Requirement R7, but did so more than 11 calendar days and less than or equal to 13 calendar days following the completion of Requirement R6. OR	The Transmission Owner notified the Transmission Operator that operates the primary control center as specified in Requirement R7, but did so more than 13 calendar days following the completion of Requirement R6. OR The Transmission Owner failed to notify the Transmission

	Violation Severity Levels			
	Lower VSL	Moderate VSL	High VSL	Severe VSL
	The Transmission Owner notified the Transmission Operator that operates the primary control center of the removal from the identification in Requirement R5, but did so more than seven calendar days and less than or equal to nine calendar days following the verification or the subsequent risk assessment.	The Transmission Owner notified the Transmission Operator that operates the primary control center of the removal from the identification in Requirement R5, but did so more than nine calendar days and less than or equal to 11 calendar days following the verification or the subsequent risk assessment.	The Transmission Owner notified the Transmission Operator that operates the primary control center of the removal from the identification in Requirement R5, but did so more than 11 calendar days and less than or equal to 13 calendar days following the verification or the subsequent risk assessment.	Operator that it operates a control center identified in Requirement R5. OR The Transmission Owner notified the Transmission Operator that operates the primary control center of the removal from the identification in Requirement R5, but did so more than 13 calendar days following the verification or the subsequent risk assessment. OR The Transmission Owner failed to notify the Transmission Operator that operates the primary control center of the removal from the identification in Requirement R5.

	Violation Severity Levels			
	Lower VSL	Moderate VSL	High VSL	Severe VSL
R8.	N/A	The responsible entity conducted an evaluation of the potential physical threats and vulnerabilities to each of its Transmission station(s), Transmission substation(s), and primary control center(s) identified in Requirement R5, but failed to consider one of Parts 8.1 through 8.3 in the evaluation.	The responsible entity conducted an evaluation of the potential physical threats and vulnerabilities to each of its Transmission station(s), Transmission substation(s), and primary control center(s) identified in Requirement R5, but failed to consider two of Parts 8.1 through 8.3 in the evaluation.	The responsible entity failed to conduct an evaluation of the potential physical threats and vulnerabilities to each of its Transmission station(s), Transmission substation(s), and primary control center(s) identified in Requirement R5. OR The responsible entity conducted an evaluation of the potential physical threats and vulnerabilities to each of its Transmission station(s), Transmission substation(s), and primary control center(s) identified in Requirement R5, but failed to consider Parts 8.1 through 8.3.

	Violation Severity Levels			
	Lower VSL	Moderate VSL	High VSL	Severe VSL
R9.	The responsible entity developed and implemented a documented physical security plan(s) that covers each of its Transmission station(s), Transmission substation(s), and primary control center(s) identified in Requirement R5, but did so more than 120 calendar days, but less than or equal to 130 calendar days after completing Requirement R6. OR The responsible entity developed and implemented a documented physical security plan(s) that covers its Transmission station(s), Transmission substation(s), and primary control center(s) identified in Requirement R5 and verified according to Requirement R6, but failed to include one of Parts 9.1 through 9.4 in the plan.	The responsible entity developed and implemented a documented physical security plan(s) that covers each of its Transmission station(s), Transmission substation(s), and primary control center(s) identified in Requirement R5, but did so more than 130 calendar days, but less than or equal to 140 calendar days after completing Requirement R6. OR The responsible entity developed and implemented a documented physical security plan(s) that covers its Transmission station(s), Transmission substation(s), and primary control center(s) identified in Requirement R5 and verified according to Requirement R6, but failed to include two of Parts 9.1 through 9.4 in the plan.	The responsible entity developed and implemented a documented physical security plan(s) that covers each of its Transmission station(s), Transmission substation(s), and primary control center(s) identified in Requirement R5, but did so more than 140 calendar days, but less than or equal to 150 calendar days after completing Requirement R6. OR The responsible entity developed and implemented a documented physical security plan(s) that covers its Transmission station(s), Transmission substation(s), and primary control center(s) identified in Requirement R5 and verified according to Requirement R6, but failed to include three of Parts 9.1 through 9.4 in the plan.	The responsible entity developed and implemented a documented physical security plan(s) that covers each of its Transmission station(s), Transmission substation(s), and primary control center(s) identified in Requirement R5, but did so more than 150 calendar days after completing the verification in Requirement R6. OR The responsible entity failed to develop and implement a documented physical security plan(s) that covers its Transmission station(s), Transmission substation(s), and primary control center(s) identified in Requirement R5 and verified according to Requirement R6. OR The responsible entity developed and implemented a documented physical security plan(s) that covers its

	Violation Severity Levels			
	Lower VSL	Moderate VSL	High VSL	Severe VSL
				Transmission station(s), Transmission substation(s), and primary control center(s) identified in Requirement R5 and verified according to Requirement R6, but failed to include Parts 9.1 through 9.4 in the plan.
R10.	The responsible entity had an unaffiliated third party review the evaluation performed under Requirement R8 and the security plan(s) developed under Requirement R9, but did so in more than 90 calendar days, but less than or equal to 100 calendar days. OR The responsible entity had an unaffiliated third party review the evaluation performed under Requirement R8 and the security plan(s) developed under Requirement R9 and modified or documented the reason for not modifying the security plan(s) as specified in Part 10.3, but did so more than 70 calendar days and less than	The responsible entity had an unaffiliated third party review the evaluation performed under Requirement R8 and the security plan(s) developed under Requirement R9, but did so in more than 100 calendar days, but less than or equal to 110 calendar days. OR The responsible entity had an unaffiliated third party review the evaluation performed under Requirement R8 and the security plan(s) developed under Requirement R9 and modified or documented the reason for not modifying the security plan(s) as specified in Part 10.3, but did so more than 80 calendar days following	The responsible entity had an unaffiliated third party review the evaluation performed under Requirement R8 and the security plan(s) developed under Requirement R9, but did so more than 110 calendar days, but less than or equal to 120 calendar days. OR The responsible entity failed to have an unaffiliated third party review the evaluation performed under Requirement R8 and the security plan(s) developed under Requirement R9. OR The responsible entity had an unaffiliated third party review	The responsible entity failed to have an unaffiliated third party review the evaluation performed under Requirement R8 and the security plan(s) developed under Requirement R9 in more than 120 calendar days.

	Violation Severity Levels			
	Lower VSL	Moderate VSL	High VSL	Severe VSL
	or equal to 80 calendar days following completion of the third party review.	completion of the third party review. OR The responsible entity had an unaffiliated third party review the evaluation performed under Requirement R8 and the security plan(s) developed under Requirement R9, but did not document the reason for not modifying the security plan(s) as specified in Part 10.3.	the evaluation performed under Requirement R8 and the security plan(s) developed under Requirement R9, but failed to implement procedures for protecting information per Part 10.4.	

D. Regional Variances

None.

E. Interpretations

None.

F. Associated Documents

CIP-014-4 Implementation Plan

CIP-014-4 Technical Rationale Document

Version History

Version	Date	Action	Change Tracking
1	October 1, 2015	Effective Date	New
2	April 16, 2015	Revised to meet FERC Order 802 directive to remove “widespread”.	Revision
2	May 7, 2015	Adopted by the NERC Board of Trustees	
2	July 14, 2015	FERC Letter Order in Docket No. RD15-4-000 approving CIP-014-2	
3	January 19, 2022	Revised to remove Compliance Section 1.4	Revision
3	June 16, 2022	FERC Letter Order in Docket No. RD22-3-000 approving Modifications to CIP-014-3	Revision
3	June 16,2022	Effective Date	Revision
4	TBD	Revisions made by the Project 2023-06 drafting team	Revision

Attachment 1 – Applicability Criteria

Applicable Transmission station(s) or Transmission substation(s) are those that meet any of the following criteria:

1. Transmission Facilities operated at 500 kV or higher. For the purpose of this criterion, the collector bus for a generation plant is not considered a Transmission Facility, but is part of the generation interconnection Facility.

2. Transmission Facilities that are operating between 200 kV and 499 kV at a single station or substation, where the station or substation is connected at 200 kV or higher voltages to three or more other Transmission stations or substations and has an "aggregate weighted value" exceeding 3,000 according to the table below. The "aggregate weighted value" for a single station or substation is determined by summing the "weight value per line" shown in the table below for each incoming and each outgoing BES Transmission Line that is connected to another Transmission station or substation. For the purpose of this criterion, the collector bus for a generation plant is not considered a Transmission Facility, but is part of the generation interconnection Facility.

Voltage Value of a Line	Weight Value per Line
less than 200 kV (not applicable)	(not applicable)
200 kV to 299 kV	700
300 kV to 499 kV	1,300
500 kV and above	N/A

3. Transmission Facilities at a single station or substation location that are identified by their Reliability Coordinator, Planning Coordinator, or Transmission Planner as critical to the derivation of Interconnection Reliability Operating Limits (IROLs) and their associated contingencies.

4. Transmission Facilities identified as essential to meeting Nuclear Plant Interface Requirements (NPIRs).

Standard Development Timeline

This section is maintained by the drafting team during the development of the standard and will be removed when the standard is adopted by the NERC Board of Trustees (Board).

Description of Current Draft

CIP-014-4 is posted for a 45-day formal comment period with additional ballot.

Completed Actions	Date
Standards Committee approved Standard Authorization Request for posting	June 21, 2023
Standard Authorization Request posted for comment	July 26 – August 24, 2023
Accepted Revised Standard Authorization Request	January 17, 2024
45-day formal or informal comment period with ballot	May 20 – July 3, 2024
45-day formal or informal comment period with additional ballot	September 23 – November 6, 2024
45-day formal comment period with additional ballot	June 6 – July 21, 2025
45-day formal comment period with additional ballot	March 31 – May 14, 2026

Anticipated Actions	Date
10-day final ballot	May 28 – June 8, 2026
Board adoption	June 17, 2026

New or Modified Term(s) Used in NERC Reliability Standards

This section includes all new or modified terms used in the proposed standard that will be included in the *Glossary of Terms Used in NERC Reliability Standards* upon applicable regulatory approval. Terms used in the proposed standard that are already defined and are not being modified can be found in the *Glossary of Terms Used in NERC Reliability Standards*. The new or revised terms listed below will be presented for approval along with the proposed standard. Upon Board adoption, this section will be removed.

Term(s):

None.

A. Introduction

1. **Title:** Physical Security

2. **Number:** CIP-014-4

3. **Purpose:** To identify and protect Transmission stations and Transmission substations, and their associated primary control centers, that if rendered inoperable or damaged due to a physical attack, could result in instability, uncontrolled separation, or Cascading within an Interconnection.

4. **Applicability:**

   4.1. Functional Entities:

   4.1.1. Transmission Owner that owns or jointly owns one or more Transmission stations or Transmission substations that meet the applicability criteria of Attachment 1.

   4.1.2. Transmission Operator

   Exemption: Facilities in a "protected area," as defined in 10 C.F.R. § 73.2, within the scope of a security plan approved or accepted by the Nuclear Regulatory Commission are not subject to this Standard; or Facilities within the scope of a security plan approved or accepted by the Canadian Nuclear Safety Commission are not subject to this Reliability Standard.

5. **Effective Date:** See Implementation Plan for CIP-014-4.

B. Requirements and Measures

R1. Each Transmission Owner shall, at least once every 36 calendar months, identify each applicable Transmission station and Transmission substation meeting any of the criteria in Attachment 1 that is either existing or planned to be in service within 36 calendar months. *[Violation Risk Factor: High; Time-Horizon: Long-term Planning]*

M1. Examples of evidence may include, but are not limited to, dated written or electronic documentation of the Transmission station(s) and Transmission substation(s) (existing and those planned to be in service within 36 calendar months) that meet any of the criteria in Attachment 1.

R2. Each Transmission Owner with applicable Transmission station(s) or Transmission substation(s) identified in Requirement R1 shall identify proximate existing Bulk Electric System (BES) Transmission station(s) and ~~Bulk Electric System~~BES Transmission substation(s), irrespective of ownership, within 1500 feet or 457 meters (the shortest distance, measured substation fence line to substation fence line) of an applicable Transmission station or Transmission substation identified in Requirement R1. *[Violation Risk Factor: Medium; Time-Horizon: Long-term Planning]*

M2. Examples of evidence may include, but are not limited to, dated written or electronic documentation of the ~~Bulk Electric System~~BES Transmission stations or ~~Bulk Electric System~~BES Transmission substations identified in Requirement R2.

R3. Each Transmission Owner shall have a documented risk assessment methodology for evaluating the loss of each applicable Transmission station or Transmission substation identified in Requirement R1. The methodology shall include, at a minimum, the following: *[Violation Risk Factor: High; Time-Horizon: Long-term Planning]*

3.1. Documented criteria for assessing instability, uncontrolled separation, or Cascading within an Interconnection. The criteria shall include, at a minimum, technically justified thresholds identifying unacceptable generation and load loss within an Interconnection.

3.2. A provision that steady-state and dynamic simulations shall each be performed using at a minimum one System peak Load case and one System Off-Peak Load case.

3.3. Specifications for simulations at each applicable Transmission station or Transmission substation identified in accordance with Requirement R1 and, if applicable, at each associated proximate existing ~~Bulk Electric System~~BES Transmission station(s) and ~~Bulk Electric System~~BES Transmission substation(s) identified in accordance with Requirement R2, that include:

3.3.1. At the applicable Transmission station or Transmission substation:

3.3.1.1. Prior loss of communication and Protection Systems;

3.3.1.2. Application of a Fault or Faults; and

3.3.1.3. Delayed (remote) clearing times shall be used unless otherwise technically substantiated.

3.3.2. At each proximate existing ~~Bulk Electric System Transmission~~BES station(s) and ~~Bulk Electric System Transmission~~BES substation(s), as applicable:

3.3.2.1. Application of a Fault or Faults, either simultaneous with or following the Fault or Faults applied under Part 3.3.1.2; and

3.3.2.2. Normal clearing times shall be used unless otherwise technically substantiated.

3.3.3. A documented justification for the Fault(s) associated with physical attack to be simulated. A single justification may be used for multiple locations. The justification shall include at a minimum:

3.3.3.1. The type of credible high-severity physical attack considered; and

3.3.3.2. The type of Fault(s) selected based upon the attack considered.

3.3.4. Removal of all Elements that Protection Systems and other controls are expected to automatically disconnect.

3.3.5. Actual or more conservative clearing times shall be used.

M3. Each Transmission Owner shall provide dated evidence, such as electronic or hard copies, of a risk assessment methodology satisfying Requirement R3.

R4. Each Transmission Owner with applicable Transmission station(s) and Transmission substation(s) identified in Requirement R1 jointly owned by multiple Transmission Owners shall coordinate with each appropriate Transmission Owner(s) to determine and document their individual and joint responsibilities under Requirement R3 and Requirement R5. *[Violation Risk Factor: Medium; Time-Horizon: Operations Planning, Long-term Planning]*

M4. Examples of acceptable evidence may include, but are not limited to, dated documentation, such as meeting minutes, agreements, and email correspondence, that identifies that agreement has been reached on individual and joint responsibilities for performing the required risk assessments.

R5. At least once every 36 calendar months, each Transmission Owner shall perform a risk assessment to identify applicable Transmission station(s) and Transmission substation(s) identified in Requirement R1, that if rendered inoperable or damaged could result in instability, uncontrolled separation, or Cascading within an Interconnection, using the methodology established in Requirement R3. Jointly owned Transmission station(s) and Transmission substation(s) shall be assessed according to the responsibilities documented under Requirement R4. If proximate ~~Bulk Electric System Transmission~~BES station(s) and ~~Bulk Electric System~~BES Transmission substation(s) were identified in Requirement R2, they shall be included

in the risk assessment according to Requirement R3, Part 3.3. *[Violation Risk Factor: High; Time-Horizon: Operations Planning, Long-term Planning]*

5.1. If during a risk assessment, a Transmission station or Transmission substation is identified in either the dynamic or steady-state simulation as ~~causing~~ resulting in instability, uncontrolled separation, or Cascading within an Interconnection when rendered inoperable or damaged, then no further simulation is required.

5.2. If a previous risk assessment has identified a Transmission station or Transmission substation as causing instability, uncontrolled separation, or Cascading within an Interconnection when rendered inoperable or damaged, then the Transmission Owner may forgo additional assessments on that Transmission station or Transmission substation. Requirement R5, Part 5.3 and Requirement R7 through Requirement R10 still apply to that Transmission station or Transmission substation until a new risk assessment demonstrates otherwise.

5.3. The Transmission Owner shall identify the primary control center that operationally controls each Transmission station or Transmission substation identified as ~~causing~~ resulting in instability, uncontrolled separation, or Cascading within an Interconnection when rendered inoperable or damaged in the Requirement R5 risk assessment.

M5. Examples of acceptable evidence may include, but are not limited to, dated written or electronic documentation of the risk assessment satisfying Requirement R5 including the identified Transmission station(s) or Transmission substation(s). For Requirement R5, Part 5.3, examples of acceptable evidence may include, but are not limited to, dated written or electronic documentation of the identification of the primary control center that operationally controls each identified Transmission station or Transmission substation.

R6. Each Transmission Owner shall have an unaffiliated third party verify the risk assessment performed under Requirement R5. The verification may occur concurrently with or after the risk assessment performed under Requirement R5. *[Violation Risk Factor: Medium; Time-Horizon: Long-term Planning]*

6.1. Each Transmission Owner shall select an unaffiliated verifying entity that is either:

- A registered Planning Coordinator, Transmission Planner, or Reliability Coordinator; or
- An entity that has transmission planning or analysis experience.

6.2. The unaffiliated third-party verification shall verify the Transmission Owner's risk assessment performed under Requirement R5, which may include recommendations for the addition or deletion of a Transmission station(s) or Transmission substation(s). The Transmission Owner shall ensure the verification

is completed within 90 calendar days following the completion of the Requirement R5 risk assessment.

6.3. If the unaffiliated verifying entity recommends that the Transmission Owner add a Transmission station(s) or Transmission substation(s) to, or remove a Transmission station or Transmission substation from, its identification under Requirement R5, the Transmission Owner shall either, within 60 calendar days of completion of the verification, for each recommended addition or removal of a Transmission station or Transmission substation:

- Modify its identification under Requirement R5 consistent with the recommendation; or
- Document the technical basis for not modifying the identification in accordance with the recommendation.

6.4. Each Transmission Owner shall implement procedures, such as the use of non-disclosure agreements, for protecting sensitive or confidential information made available to the unaffiliated third-party verifier and to protect or exempt sensitive or confidential information developed pursuant to this Reliability Standard from public disclosure.

M6. Examples of acceptable evidence may include, but are not limited to, dated written or electronic documentation that the Transmission Owner completed an unaffiliated third party verification of the Requirement R5 risk assessment and satisfied all of the applicable provisions of Requirement R6, including, if applicable, documenting the technical basis for not modifying the identification in Requirements R1, R2, R3, R4, and R5 as specified under Part 6.3. Additionally, examples of evidence may include, but are not limited to, written or electronic documentation of procedures to protect information under Part 6.4.

R7. For a primary control center(s) identified by the Transmission Owner according to Requirement R5, Part 5.3 that a) operationally controls an identified Transmission station or Transmission substation verified according to Requirement R6, and b) is not under the operational control of the Transmission Owner: the Transmission Owner shall, within seven calendar days following completion of Requirement R6, notify the Transmission Operator that has operational control of the primary control center of such identification and the date of completion of Requirement R6. *[Violation Risk Factor: Lower; Time-Horizon: Long-term Planning]*

7.1. If a Transmission station or Transmission substation previously identified under Requirements R1 and R5 and verified according to Requirement R6 is removed from the identification during a subsequent risk assessment performed according to Requirement R5 or a verification according to Requirement R6, then the Transmission Owner shall, within seven calendar days following the verification or the subsequent risk assessment, notify the Transmission Operator that has operational control of the primary control center of the removal.

M7. Examples of acceptable evidence may include, but are not limited to, written or electronic notifications or communications that the Transmission Owner notified each Transmission Operator, as applicable, according to Requirement R7.

R8. Each Transmission Owner that identified a Transmission station, Transmission substation, or a primary control center in Requirement R5 and verified according to Requirement R6, and each Transmission Operator notified by a Transmission Owner according to Requirement R7, shall conduct an evaluation of the potential threats and vulnerabilities of a physical attack to each of their respective Transmission station(s), Transmission substation(s), and primary control center(s) identified in Requirement R5 and verified according to Requirement R6. The evaluation shall consider the following: *[Violation Risk Factor: Medium; Time-Horizon: Operations Planning, Long-term Planning]*

8.1. Unique characteristics of the identified and verified Transmission station(s), Transmission substation(s), and primary control center(s);

8.2. Prior history of attack(s) on similar facilities taking into account the frequency, geographic proximity, and severity of past physical security related events; and

8.3. Intelligence or threat warnings received from sources such as law enforcement, the Electric Reliability Organization (ERO), the Electricity Sector Information Sharing and Analysis Center (E-ISAC), U.S. federal and/or Canadian governmental agencies, or their successors.

M8. Examples of evidence may include, but are not limited to, dated written or electronic documentation that the Transmission Owner or Transmission Operator conducted an evaluation of the potential threats and vulnerabilities of a physical attack to their respective Transmission station(s), Transmission substation(s), and primary control center(s) as specified in Requirement R8.

R9. Each Transmission Owner that identified a Transmission station, Transmission substation, or primary control center in Requirement R5 and verified according to Requirement R6, and each Transmission Operator notified by a Transmission Owner according to Requirement R7, shall develop and implement a documented physical security plan(s) that covers their respective Transmission station(s), Transmission substation(s), and primary control center(s). The physical security plan(s) shall be developed within 120 calendar days following the completion of Requirement R6 and executed according to the timeline specified in the physical security plan(s). The physical security plan(s) shall include the following attributes: [*Violation Risk Factor*: *High; Time-Horizon: Long-term Planning*]

9.1. Resiliency or security measures designed collectively to deter, detect, delay, assess, communicate, and respond to potential physical threats and vulnerabilities identified during the evaluation conducted in Requirement R8.

9.2. Law enforcement contact and coordination information.

9.3. A timeline for executing the physical security enhancements and modifications specified in the physical security plan.

9.4. Provisions to evaluate evolving physical threats, and their corresponding security measures, to the Transmission station(s), Transmission substation(s), or primary control center(s).

M9. Examples of evidence may include, but are not limited to, dated written or electronic documentation of its physical security plan(s) that covers their respective identified and verified Transmission station(s), Transmission substation(s), and primary control center(s) as specified in Requirement R6, and additional evidence demonstrating execution of the physical security plan according to the timeline specified in the physical security plan.

R10. Each Transmission Owner that identified a Transmission station, Transmission substation, or primary control center in Requirement R5 and verified according to Requirement R6, and each Transmission Operator notified by a Transmission Owner according to Requirement R7, shall have an unaffiliated third party review the evaluation performed under Requirement R8 and the security plan(s) developed under Requirement R9. The review may occur concurrently with or after completion of the evaluation performed under Requirement R8 and the security plan development under Requirement R9. *[Violation Risk Factor: Medium; Time-Horizon: Long-term Planning]*

10.1. Each Transmission Owner and Transmission Operator shall select an unaffiliated third-party reviewer from the following:

- An entity or organization with electric industry physical security experience and whose review staff has at least one member who holds either a Certified Protection Professional (CPP) or Physical Security Professional (PSP) certification;
- An entity or organization approved by the ERO;
- A governmental agency with physical security expertise; or
- An entity or organization with demonstrated law enforcement, government, or military physical security expertise.

10.2. The Transmission Owner or Transmission Operator, respectively, shall ensure that the unaffiliated third-party review is completed within 90 calendar days of completing the security plan(s) developed in Requirement R9. The unaffiliated third-party review may, but is not required to, include recommended changes to the evaluation performed under Requirement R8 or the security plan(s) developed under Requirement R9.

10.3. If the unaffiliated third-party reviewer recommends changes to the evaluation performed under Requirement R8 or security plan(s) developed under

Requirement R9, the Transmission Owner or Transmission Operator shall, within 60 calendar days of the completion of the unaffiliated third party review, for each recommendation:

- Modify its evaluation or security plan(s) consistent with the recommendation; or
- Document the reason(s) for not modifying the evaluation or security plan(s) consistent with the recommendation.

10.4. Each Transmission Owner and Transmission Operator shall implement procedures, such as the use of non-disclosure agreements, for protecting sensitive or confidential information made available to the unaffiliated third-party reviewer and to protect or exempt sensitive or confidential information developed pursuant to this Reliability Standard from public disclosure.

M10. Examples of evidence may include, but are not limited to, written or electronic documentation that the Transmission Owner or Transmission Operator had an unaffiliated third party review the evaluation performed under Requirement R8 and the security plan(s) developed under Requirement R9 as specified in Requirement R10 including, if applicable, documenting the reasons for not modifying the evaluation or security plan(s) in accordance with a recommendation under Part 10.3. Additionally, examples of evidence may include, but are not limited to, written or electronic documentation of procedures to protect information under Part 10.4.

C. Compliance

1. Compliance Monitoring Process

1.1. Compliance Enforcement Authority: "Compliance Enforcement Authority" means NERC or the Regional Entity in their respective roles of monitoring and enforcing compliance with the NERC Reliability Standards.

1.2. Evidence Retention: The following evidence retention period(s) identify the period of time an entity is required to retain specific evidence to demonstrate compliance. For instances where the evidence retention period specified below is shorter than the time since the last audit, the Compliance Enforcement Authority may ask an entity to provide other evidence to show that it was compliant for the full-time period since the last audit.

The Transmission Owner and Transmission Operator shall keep data or evidence to show compliance, as identified below, unless directed by its Compliance Enforcement Authority to retain specific evidence for a longer period of time as part of an investigation:

The responsible entities shall retain evidence, as per Requirements R1 through R10, for three years.

If a Responsible Entity is found non-compliant, it shall keep information related to the non-compliance until mitigation is complete and approved, or for the time specified above, whichever is longer.

The CEA shall keep the last audit records and all requested and submitted subsequent audit records.

1.3. Compliance Monitoring and Enforcement Program: "Compliance Monitoring Enforcement Program" or "CMEP" means, depending on the context (1) the NERC Compliance Monitoring and Enforcement Program (Appendix 4C to the NERC Rules of Procedure) or the Commission-approved program of a Regional Entity, as applicable, or (2) the program, department or organization within NERC or a Regional Entity that is responsible for performing compliance monitoring and enforcement activities with respect to Registered Entities' compliance with Reliability Standards.

Violation Severity Levels

	Violation Severity Levels			
	Lower VSL	**Moderate VSL**	**High VSL**	**Severe VSL**
R1.	The Transmission Owner identified each applicable Transmission station(s) and Transmission substation(s) per Attachment 1, but did so after 36 calendar months, but less than or equal to 38 calendar months. OR The Transmission Owner identified each applicable Transmission station(s) and Transmission substation(s), but failed to identify less than or equal to 10% of the applicable Transmission station(s) and Transmission substation(s) per Attachment 1.	The Transmission Owner identified each applicable Transmission station(s) and Transmission substation(s) per Attachment 1, but did so after 38 calendar months, but less than or equal to 40 calendar months. OR The Transmission Owner identified each applicable Transmission station(s) and Transmission substation(s), but failed to identify more than 10% and less than or equal to 20% of the applicable Transmission station(s) and Transmission substation(s) per Attachment 1.	The Transmission Owner identified each applicable Transmission station(s) and Transmission substation(s) per Attachment 1, but did so after 40 calendar months, but less than or equal to 42 calendar months. OR The Transmission Owner identified each applicable Transmission station(s) and Transmission substation(s), but failed to identify more than 20% and less than or equal to 30% of the applicable Transmission station(s) and Transmission substation(s) per Attachment 1.	The Transmission Owner failed to identify each applicable Transmission station(s) and Transmission substation(s) per Attachment 1. OR The Transmission Owner identified each applicable Transmission station(s) and Transmission substation(s) per Attachment 1, but did so after more than 42 calendar months. OR The Transmission Owner identified each applicable Transmission station(s) and Transmission substation(s), but failed to identify more than 30% of the applicable Transmission station(s) and Transmission substation(s) per Attachment 1.

	Violation Severity Levels			
	Lower VSL	Moderate VSL	High VSL	Severe VSL
R2.	N/A	N/A	N/A	The Transmission Owner with applicable Transmission station(s) or Transmission substation(s) identified in Requirement R1 did not identify existing ~~Bulk Electric System~~BES Transmission station(s) and ~~Bulk Electric System~~BES Transmission substation(s), irrespective of ownership, within 1500 feet or 457 meters (the shortest distance, measured substation fence line to substation fence line) of an applicable Transmission station or Transmission substation identified in Requirement R1.
R3.	N/A	The Transmission Owner has a risk assessment methodology that failed to include one of the requirements listed in Parts 3.1 through 3.3.	The Transmission Owner has a risk assessment methodology that failed to include two of the requirements listed in Parts 3.1 through 3.3.	The Transmission Owner has a risk assessment methodology that failed to include all three of the requirements listed in Parts 3.1 through 3.3. OR The Transmission Owner does not have a risk assessment methodology.

	Violation Severity Levels			
	Lower VSL	Moderate VSL	High VSL	Severe VSL
R4.	The Transmission Owner with applicable Transmission station(s) and Transmission substation(s) identified in Requirement R1 owned by multiple Transmission Owners failed to coordinate with each appropriate Transmission Owner(s) to determine and document their individual and joint responsibilities for documenting a risk assessment methodology under Requirement R3 and for performing any required risk assessments per Requirement R5 for less than or equal to 25% of jointly owned applicable Transmission station(s) and Transmission substation(s).	The Transmission Owner with applicable Transmission station(s) and Transmission substation(s) identified in Requirement R1 owned by multiple Transmission Owners failed to coordinate with each appropriate Transmission Owner(s) to determine and document their individual and joint responsibilities for documenting a risk assessment methodology under Requirement R3 and for performing any required risk assessments per Requirement R5 for more than 25% and less than or equal to 50% of jointly owned applicable Transmission station(s) and Transmission substation(s).	The Transmission Owner with applicable Transmission station(s) and Transmission substation(s) identified in Requirement owned by multiple Transmission Owners failed to coordinate with each appropriate Transmission Owner(s) to determine and document their individual and joint responsibilities for documenting a risk assessment methodology under Requirement R3 and for performing any required risk assessments per Requirement R5 for more than 50% and less than or equal to 75% of jointly owned applicable Transmission station(s) and Transmission substation(s).	The Transmission Owner with applicable Transmission station(s) and Transmission substation(s) identified in Requirement R1 owned by multiple Transmission Owners failed to coordinate with each appropriate Transmission Owner(s) to determine and document their individual and joint responsibilities for documenting a risk assessment methodology under Requirement R3 and for performing any required risk assessments per Requirement R5 for more than 75% and less than or equal to 100% of any evidence for jointly owned applicable Transmission station(s) and Transmission substation(s).
R5.	The Transmission Owner performed a risk assessment, but did so after 36 calendar months, but less than or equal to 38 calendar months.	The Transmission Owner performed a risk assessment, but did so after 38 calendar months, but less than or equal to 40 calendar months. OR	The Transmission Owner performed a risk assessment, but did so after 40 calendar months, but less than or equal to 42 calendar months. OR	The Transmission Owner performed a risk assessment, but did so after more than 42 calendar months. OR

	Violation Severity Levels			
	Lower VSL	Moderate VSL	High VSL	Severe VSL
		The Transmission Owner performed a risk assessment inconsistent with one of the methodology requirements listed in Requirement R3, Parts 3.1 through 3.3.	The Transmission Owner performed a risk assessment inconsistent with two of the methodology requirements listed in Requirement R3, Parts 3.1 through 3.3. OR The Transmission Owner performed a risk assessment, but failed to include the primary control center identified in Part 5.2.	The Transmission Owner performed a risk assessment inconsistent with all three of the methodology requirements listed in Requirement R3, Parts 3.1 through 3.3.
R6.	The Transmission Owner had an unaffiliated third party verify the risk assessment performed under Requirement R5, but did so in more than 90 calendar days, but less than or equal to 100 calendar days following completion of Requirement R5. OR The Transmission Owner had an unaffiliated third party verify the risk assessment performed under Requirement R5 and modified or documented the technical basis	The Transmission Owner had an unaffiliated third party verify the risk assessment performed under Requirement R5, but did so more than 100 calendar days, but less than or equal to 110 calendar days following completion of Requirement R5. OR The Transmission Owner had an unaffiliated third party verify the risk assessment performed under Requirement R5 and modified or documented the technical basis for not modifying its identification	The Transmission Owner had an unaffiliated third party verify the risk assessment performed under Requirement R5, but did so more than 110 calendar days, but less than or equal to 120 calendar days following completion of Requirement R5. OR The Transmission Owner had an unaffiliated third party verify the risk assessment performed under Requirement R5 and modified or documented the technical basis	The Transmission Owner had an unaffiliated third party verify the risk assessment performed under Requirement R5, but did so more than 120 calendar days following completion of Requirement R5. OR The Transmission Owner failed to have an unaffiliated third party verify the risk assessment performed under Requirement R5. OR

	Violation Severity Levels			
	Lower VSL	Moderate VSL	High VSL	Severe VSL
	for not modifying its identification under Requirement R5 as required by Part6.3, but did so more than 60 calendar days and less than or equal to 70 calendar days from completion of the third party verification.	under Requirement R5 as required by Part 6.3, but did so more than 70 calendar days and less than or equal to 80 calendar days from completion of the third party verification.	for not modifying its identification under Requirement R5 as required by Part 6.3, but did so more than 80 calendar days from completion of the third party verification. OR The Transmission Owner had an unaffiliated third party verify the risk assessment performed under Requirement R5, but failed to modify or document the technical basis for not modifying its identification under R4 as required by Part 6.3.	The Transmission Owner had an unaffiliated third party verify the risk assessment performed under Requirement R5, but failed to implement procedures for protecting information per Part 6.4.
R7.	The Transmission Owner notified the Transmission Operator that operates the primary control center as specified in Requirement R7, but did so more than seven calendar days and less than or equal to nine calendar days following the completion of Requirement R6. OR	The Transmission Owner notified the Transmission Operator that operates the primary control center as specified in Requirement R7, but did so more than nine calendar days and less than or equal to 11 calendar days following the completion of Requirement R6. OR	The Transmission Owner notified the Transmission Operator that operates the primary control center as specified in Requirement R7, but did so more than 11 calendar days and less than or equal to 13 calendar days following the completion of Requirement R6. OR	The Transmission Owner notified the Transmission Operator that operates the primary control center as specified in Requirement R7, but did so more than 13 calendar days following the completion of Requirement R6. OR The Transmission Owner failed to notify the Transmission

	Violation Severity Levels			
	Lower VSL	Moderate VSL	High VSL	Severe VSL
	The Transmission Owner notified the Transmission Operator that operates the primary control center of the removal from the identification in Requirement R5, but did so more than seven calendar days and less than or equal to nine calendar days following the verification or the subsequent risk assessment.	The Transmission Owner notified the Transmission Operator that operates the primary control center of the removal from the identification in Requirement R5, but did so more than nine calendar days and less than or equal to 11 calendar days following the verification or the subsequent risk assessment.	The Transmission Owner notified the Transmission Operator that operates the primary control center of the removal from the identification in Requirement R5, but did so more than 11 calendar days and less than or equal to 13 calendar days following the verification or the subsequent risk assessment.	Operator that it operates a control center identified in Requirement R5. OR The Transmission Owner notified the Transmission Operator that operates the primary control center of the removal from the identification in Requirement R5, but did so more than 13 calendar days following the verification or the subsequent risk assessment. OR The Transmission Owner failed to notify the Transmission Operator that operates the primary control center of the removal from the identification in Requirement R5.

	Violation Severity Levels			
	Lower VSL	Moderate VSL	High VSL	Severe VSL
R8.	N/A	The responsible entity conducted an evaluation of the potential physical threats and vulnerabilities to each of its Transmission station(s), Transmission substation(s), and primary control center(s) identified in Requirement R5, but failed to consider one of Parts 8.1 through 8.3 in the evaluation.	The responsible entity conducted an evaluation of the potential physical threats and vulnerabilities to each of its Transmission station(s), Transmission substation(s), and primary control center(s) identified in Requirement R5, but failed to consider two of Parts 8.1 through 8.3 in the evaluation.	The responsible entity failed to conduct an evaluation of the potential physical threats and vulnerabilities to each of its Transmission station(s), Transmission substation(s), and primary control center(s) identified in Requirement R5. OR The responsible entity conducted an evaluation of the potential physical threats and vulnerabilities to each of its Transmission station(s), Transmission substation(s), and primary control center(s) identified in Requirement R5, but failed to consider Parts 8.1 through 8.3.

	Violation Severity Levels			
	Lower VSL	Moderate VSL	High VSL	Severe VSL
R9.	The responsible entity developed and implemented a documented physical security plan(s) that covers each of its Transmission station(s), Transmission substation(s), and primary control center(s) identified in Requirement R5, but did so more than 120 calendar days, but less than or equal to 130 calendar days after completing Requirement R6. OR The responsible entity developed and implemented a documented physical security plan(s) that covers its Transmission station(s), Transmission substation(s), and primary control center(s) identified in Requirement R5 and verified according to Requirement R6, but failed to include one of Parts 9.1 through 9.4 in the plan.	The responsible entity developed and implemented a documented physical security plan(s) that covers each of its Transmission station(s), Transmission substation(s), and primary control center(s) identified in Requirement R5, but did so more than 130 calendar days, but less than or equal to 140 calendar days after completing Requirement R6. OR The responsible entity developed and implemented a documented physical security plan(s) that covers its Transmission station(s), Transmission substation(s), and primary control center(s) identified in Requirement R5 and verified according to Requirement R6, but failed to include two of Parts 9.1 through 9.4 in the plan.	The responsible entity developed and implemented a documented physical security plan(s) that covers each of its Transmission station(s), Transmission substation(s), and primary control center(s) identified in Requirement R5, but did so more than 140 calendar days, but less than or equal to 150 calendar days after completing Requirement R6. OR The responsible entity developed and implemented a documented physical security plan(s) that covers its Transmission station(s), Transmission substation(s), and primary control center(s) identified in Requirement R5 and verified according to Requirement R6, but failed to include three of Parts 9.1 through 9.4 in the plan.	The responsible entity developed and implemented a documented physical security plan(s) that covers each of its Transmission station(s), Transmission substation(s), and primary control center(s) identified in Requirement R5, but did so more than 150 calendar days after completing the verification in Requirement R6. OR The responsible entity failed to develop and implement a documented physical security plan(s) that covers its Transmission station(s), Transmission substation(s), and primary control center(s) identified in Requirement R5 and verified according to Requirement R6. OR The responsible entity developed and implemented a documented physical security plan(s) that covers its

	Violation Severity Levels			
	Lower VSL	Moderate VSL	High VSL	Severe VSL
				Transmission station(s), Transmission substation(s), and primary control center(s) identified in Requirement R5 and verified according to Requirement R6, but failed to include Parts 9.1 through 9.4 in the plan.
R10.	The responsible entity had an unaffiliated third party review the evaluation performed under Requirement R8 and the security plan(s) developed under Requirement R9, but did so in more than 90 calendar days, but less than or equal to 100 calendar days. OR The responsible entity had an unaffiliated third party review the evaluation performed under Requirement R8 and the security plan(s) developed under Requirement R9 and modified or documented the reason for not modifying the security plan(s) as specified in Part 10.3, but did so more than 70 calendar days and less than	The responsible entity had an unaffiliated third party review the evaluation performed under Requirement R8 and the security plan(s) developed under Requirement R9, but did so in more than 100 calendar days, but less than or equal to 110 calendar days. OR The responsible entity had an unaffiliated third party review the evaluation performed under Requirement R8 and the security plan(s) developed under Requirement R9 and modified or documented the reason for not modifying the security plan(s) as specified in Part 10.3, but did so more than 80 calendar days following	The responsible entity had an unaffiliated third party review the evaluation performed under Requirement R8 and the security plan(s) developed under Requirement R9, but did so more than 110 calendar days, but less than or equal to 120 calendar days. OR The responsible entity failed to have an unaffiliated third party review the evaluation performed under Requirement R8 and the security plan(s) developed under Requirement R9. OR The responsible entity had an unaffiliated third party review	The responsible entity failed to have an unaffiliated third party review the evaluation performed under Requirement R8 and the security plan(s) developed under Requirement R9 in more than 120 calendar days.

	Violation Severity Levels			
	Lower VSL	Moderate VSL	High VSL	Severe VSL
	or equal to 80 calendar days following completion of the third party review.	completion of the third party review. OR The responsible entity had an unaffiliated third party review the evaluation performed under Requirement R8 and the security plan(s) developed under Requirement R9, but did not document the reason for not modifying the security plan(s) as specified in Part 10.3.	the evaluation performed under Requirement R8 and the security plan(s) developed under Requirement R9, but failed to implement procedures for protecting information per Part 10.4.	

D. Regional Variances

None.

E. Interpretations

None.

F. Associated Documents

CIP-014-4 Implementation Plan

CIP-014-4 Technical Rationale Document

Version History

Version	Date	Action	Change Tracking
1	October 1, 2015	Effective Date	New
2	April 16, 2015	Revised to meet FERC Order 802 directive to remove “widespread”.	Revision
2	May 7, 2015	Adopted by the NERC Board of Trustees	
2	July 14, 2015	FERC Letter Order in Docket No. RD15-4-000 approving CIP-014-2	
3	January 19, 2022	Revised to remove Compliance Section 1.4	Revision
3	June 16, 2022	FERC Letter Order in Docket No. RD22-3-000 approving Modifications to CIP-014-3	Revision
3	June 16,2022	Effective Date	Revision
4	TBD	Revisions made by the Project 2023-06 drafting team	Revision

Attachment 1 – Applicability Criteria

Applicable Transmission station(s) or Transmission substation(s) are those that meet any of the following criteria:

1. Transmission Facilities operated at 500 kV or higher. For the purpose of this criterion, the collector bus for a generation plant is not considered a Transmission Facility, but is part of the generation interconnection Facility.

2. Transmission Facilities that are operating between 200 kV and 499 kV at a single station or substation, where the station or substation is connected at 200 kV or higher voltages to three or more other Transmission stations or substations and has an "aggregate weighted value" exceeding 3,000 according to the table below. The "aggregate weighted value" for a single station or substation is determined by summing the "weight value per line" shown in the table below for each incoming and each outgoing ~~Bulk Electric System~~BES Transmission Line that is connected to another Transmission station or substation. For the purpose of this criterion, the collector bus for a generation plant is not considered a Transmission Facility, but is part of the generation interconnection Facility.

Voltage Value of a Line	Weight Value per Line
less than 200 kV (not applicable)	(not applicable)
200 kV to 299 kV	700
300 kV to 499 kV	1,300
500 kV and above	N/A

3. Transmission Facilities at a single station or substation location that are identified by their Reliability Coordinator, Planning Coordinator, or Transmission Planner as critical to the derivation of Interconnection Reliability Operating Limits (IROLs) and their associated contingencies.

4. Transmission Facilities identified as essential to meeting Nuclear Plant Interface Requirements (NPIRs).

Standard Development Timeline

This section is maintained by the drafting team during the development of the standard and will be removed when the standard is adopted by the NERC Board of Trustees (Board).

Description of Current Draft

CIP-014-4 is posted for a 45-day formal comment period with additional ballot.

Completed Actions	Date
Standards Committee approved Standard Authorization Request for posting	June 21, 2023
Standard Authorization Request posted for comment	July 26 – August 24, 2023
Accepted Revised Standard Authorization Request	January 17, 2024
45-day formal or informal comment period with ballot	May 20 – July 3, 2024
45-day formal or informal comment period with additional ballot	September 23 – November 6, 2024
45-day formal comment period with additional ballot	June 6 – July 21, 2025
45-day formal comment period with additional ballot	March 31 – May 14, 2026

Anticipated Actions	Date
10-day final ballot	May 28 – June 8, 2026
Board adoption	June 17, 2026

New or Modified Term(s) Used in NERC Reliability Standards

This section includes all new or modified terms used in the proposed standard that will be included in the *Glossary of Terms Used in NERC Reliability Standards* upon applicable regulatory approval. Terms used in the proposed standard that are already defined and are not being modified can be found in the *Glossary of Terms Used in NERC Reliability Standards*. The new or revised terms listed below will be presented for approval along with the proposed standard. Upon Board adoption, this section will be removed.

Term(s):

None.

A. Introduction

1. **Title:** Physical Security

2. **Number:** CIP-~~014-3~~014-4

3. **Purpose:** To identify and protect Transmission stations and Transmission substations, and their associated primary control centers, that if rendered inoperable or damaged ~~as a result of~~due to a physical attack, could result in instability, uncontrolled separation, or Cascading within an Interconnection.

4. **Applicability:**

   4.1. Functional Entities:

   4.1.1. ~~**4.1.1**~~ Transmission Owner that owns ~~**a**~~or jointly owns one or more Transmission ~~**station**~~stations or Transmission ~~**substation that meets any of the following**~~substations that meet the applicability criteria~~:~~ of Attachment 1.

   ~~**4.1.1.1** Transmission Facilities operated at 500 kV or higher. For the purpose of this criterion, the collector bus for a generation plant is not considered a Transmission Facility, but is part of the generation interconnection Facility.~~

   ~~**4.1.1.2** Transmission Facilities that are operating between 200 kV and 499 kV at a single station or substation, where the station or substation is connected at 200 kV or higher voltages to three or more other Transmission stations or substations and has an "aggregate weighted value" exceeding 3000 according to the table below. The "aggregate weighted value" for a single station or substation is determined by summing the "weight value per line" shown in the table below for each incoming and each outgoing BES Transmission Line that is connected to another Transmission station or substation. For the purpose of this criterion, the collector bus for a generation plant is not considered a Transmission Facility, but is part of the generation interconnection Facility.~~

~~**Voltage Value of a Line**~~	~~**Weight Value per Line**~~
~~less than 200 kV (not applicable)~~	~~(not applicable)~~
~~200 kV to 299 kV~~	~~700~~
~~300 kV to 499 kV~~	~~1300~~
~~500 kV and above~~	~~0~~

   ~~**4.1.1.3** Transmission Facilities at a single station or substation location that are identified by its Reliability Coordinator, Planning Coordinator, or Transmission Planner as critical to the derivation of Interconnection~~

~~Reliability Operating Limits (IROLs) and their associated contingencies.~~

~~**4.1.1.4** Transmission Facilities identified as essential to meeting Nuclear Plant Interface Requirements.~~

4.1.2. ~~**4.1.2**~~ Transmission Operator~~.~~

Exemption: Facilities in a "protected area," as defined in 10 C.F.R. § 73.2, within the scope of a security plan approved or accepted by the Nuclear Regulatory Commission are not subject to this Standard; or~~,~~ Facilities within the scope of a security plan approved or accepted by the Canadian Nuclear Safety Commission are not subject to this Reliability Standard.

5. ~~5.~~ Effective ~~Dates~~Date:

See Implementation Plan for CIP-~~014-2~~014-4.

~~6. Background:~~

~~This Reliability Standard addresses the directives from the FERC order issued March 7, 2014, *Reliability Standards for Physical Security Measures*, 146 FERC ¶ 61,166 (2014), which required NERC to develop a physical security reliability standard(s) to identify and protect facilities that if rendered inoperable or damaged could result in instability, uncontrolled separation, or Cascading within an Interconnection~~

B. Requirements and Measures

R1. Each Transmission Owner shall, ~~perform an initial risk assessment and subsequent risk assessments of its Transmission stations and Transmission substations (existing and planned to be in service within 24 months) that meet the criteria specified in Applicability Section 4.1.1. The initial and subsequent risk assessments shall consist of a transmission analysis or transmission analyses designed to~~ at least once every 36 calendar months, identify each applicable ~~the~~ Transmission station~~(s)~~ and Transmission substation~~(s) that if rendered inoperable or damaged could result in instability, uncontrolled separation, or Cascading within an Interconnection,~~ meeting any of the criteria in Attachment 1 that is either existing or planned to be in service within 36 calendar months. *[Violation Risk Factor: High; Time-Horizon: Long-term Planning]*

~~**1.1.** Subsequent risk assessments shall be performed:~~

~~At least once every 30 calendar months for a Transmission Owner that has identified in its previous risk assessment (as verified according to Requirement R2) one or more Transmission stations or Transmission substations that if rendered inoperable or damaged could result in instability, uncontrolled separation, or Cascading within an Interconnection; or~~

M1. Examples of evidence may include, but are not limited to, dated written or electronic documentation of the ~~risk assessment of its~~ Transmission station(s) and Transmission substation(s) (existing and those planned to be in service within ~~24~~ 36 calendar months) that meet any of the criteria in Attachment 1 ~~Applicability Section 4.1.1 as specified in Requirement R1. Additionally, examples of acceptable evidence may include, but are not limited to, dated written or electronic documentation of the identification of the primary control center that operationally controls each Transmission station or Transmission substation identified in the Requirement R1 risk assessment as specified in Requirement R1, Part 1.2~~.

R2. Each Transmission Owner with applicable Transmission station(s) or Transmission substation(s) identified in Requirement R1 shall identify proximate existing Bulk Electric System (BES) Transmission station(s) and BES Transmission substation(s), irrespective of ownership, within 1500 feet or 457 meters (the shortest distance, measured substation fence line to substation fence line) of an applicable Transmission station or Transmission substation identified in Requirement R1. *[Violation Risk Factor: Medium; Time-Horizon: Long-term Planning]*

M2. Examples of evidence may include, but are not limited to, dated written or electronic documentation of the BES Transmission stations or BES Transmission substations identified in Requirement R2.

R3. Each Transmission Owner shall have a documented risk assessment methodology for evaluating the loss of each applicable Transmission station or Transmission substation identified in Requirement R1. The methodology shall include, at a minimum, the following: *[Violation Risk Factor: High; Time-Horizon: Long-term Planning]*

3.1. Documented criteria for assessing instability, uncontrolled separation, or Cascading within an Interconnection. The criteria shall include, at a minimum, technically justified thresholds identifying unacceptable generation and load loss within an Interconnection.

3.2. A provision that steady-state and dynamic simulations shall each be performed using at a minimum one System peak Load case and one System Off-Peak Load case.

3.3. Specifications for simulations at each applicable Transmission station or Transmission substation identified in accordance with Requirement R1 and, if applicable, at each associated proximate existing BES Transmission station(s) and BES Transmission substation(s) identified in accordance with Requirement R2, that include:

3.3.1. At the applicable Transmission station or Transmission substation:

3.3.1.1. Prior loss of communication and Protection Systems;

3.3.1.2. Application of a Fault or Faults; and

3.3.1.3. Delayed (remote) clearing times shall be used unless otherwise technically substantiated.

3.3.2. At each proximate existing BES Transmission station(s) and BES Transmission substation(s), as applicable:

3.3.2.1. Application of a Fault or Faults, either simultaneous with or following the Fault or Faults applied under Part 3.3.1.2; and

3.3.2.2. Normal clearing times shall be used unless otherwise technically substantiated.

3.3.3. A documented justification for the Fault(s) associated with physical attack to be simulated. A single justification may be used for multiple locations. The justification shall include at a minimum:

3.3.3.1. The type of credible high-severity physical attack considered; and

3.3.3.2. The type of Fault(s) selected based upon the attack considered.

3.3.4. Removal of all Elements that Protection Systems and other controls are expected to automatically disconnect.

3.3.5. Actual or more conservative clearing times shall be used.

M3. Each Transmission Owner shall provide dated evidence, such as electronic or hard copies, of a risk assessment methodology satisfying Requirement R3.

R4. Each Transmission Owner with applicable Transmission station(s) and Transmission substation(s) identified in Requirement R1 jointly owned by multiple Transmission Owners shall coordinate with each appropriate Transmission Owner(s) to determine and document their individual and joint responsibilities under Requirement R3 and Requirement R5. *[Violation Risk Factor: Medium; Time-Horizon: Operations Planning, Long-term Planning]*

M4. Examples of acceptable evidence may include, but are not limited to, dated documentation, such as meeting minutes, agreements, and email correspondence, that identifies that agreement has been reached on individual and joint responsibilities for performing the required risk assessments.

R5. At least once every 36 calendar months, each Transmission Owner shall perform a risk assessment to identify applicable Transmission station(s) and Transmission substation(s) identified in Requirement R1, that if rendered inoperable or damaged could result in instability, uncontrolled separation, or Cascading within an Interconnection, using the methodology established in Requirement R3. Jointly owned Transmission station(s) and Transmission substation(s) shall be assessed according to the responsibilities documented under Requirement R4. If proximate BES Transmission station(s) and BES Transmission substation(s) were identified in Requirement R2, they shall be included in the risk assessment according to Requirement R3, Part 3.3. *[Violation Risk Factor: High; Time-Horizon: Operations Planning, Long-term Planning]*

5.1. If during a risk assessment, a Transmission station or Transmission substation is identified in either the dynamic or steady-state simulation as resulting in instability, uncontrolled separation, or Cascading within an Interconnection when rendered inoperable or damaged, then no further simulation is required.

5.2. If ~~At least once every 60 calendar months for a Transmission Owner that has not identified in its~~ a previous risk assessment ~~(as verified according to Requirement R2) any Transmission stations or Transmission substations that if rendered inoperable or damaged could result in~~ has identified a Transmission station or Transmission substation as causing instability, uncontrolled separation, or Cascading within an Interconnection when rendered inoperable or damaged, then the Transmission Owner may forgo additional assessments on that Transmission station or Transmission substation. Requirement R5, Part 5.3 and Requirement R7 through Requirement R10 still apply to that Transmission station or Transmission substation until a new risk assessment demonstrates otherwise.

5.3. ~~**1.2.**~~ The Transmission Owner shall identify the primary control center that operationally controls each Transmission station or Transmission substation

identified ~~in the Requirement R1 risk assessment~~ as resulting in instability, uncontrolled separation, or Cascading within an Interconnection when rendered inoperable or damaged in the Requirement R5 risk assessment.

M5. Examples of acceptable evidence may include, but are not limited to, dated written or electronic documentation of the risk assessment satisfying Requirement R5 including the identified Transmission station(s) or Transmission substation(s). For Requirement R5, Part 5.3, examples of acceptable evidence may include, but are not limited to, dated written or electronic documentation of the identification of the primary control center that operationally controls each identified Transmission station or Transmission substation.

R6. ~~**R2.**~~ Each Transmission Owner shall have an unaffiliated third party verify the risk assessment performed under Requirement ~~R1~~R5. The verification may occur ~~concurrent~~concurrently with or after the risk assessment performed under Requirement ~~R1. *[VRF*~~R5. *[Violation Risk Factor: Medium; Time-Horizon: Long-term Planning]*

6.1. ~~**2.1.**~~ Each Transmission Owner shall select an unaffiliated verifying entity that is either:

- A registered Planning Coordinator, Transmission Planner, or Reliability Coordinator; or
- An entity that has transmission planning or analysis experience.

6.2. ~~**2.2.**~~ The unaffiliated ~~third party~~third-party verification shall verify the Transmission Owner's risk assessment performed under Requirement ~~R1~~R5, which may include recommendations for the addition or deletion of a Transmission station(s) or Transmission substation(s). The Transmission Owner shall ensure the verification is completed within 90 calendar days following the completion of the Requirement ~~R1~~R5 risk assessment.

6.3. ~~**2.3.**~~ If the unaffiliated verifying entity recommends that the Transmission Owner add a Transmission station(s) or Transmission substation(s) to, or remove a Transmission station~~(s)~~ or Transmission substation~~(s)~~ from, its identification under Requirement ~~R1~~R5, the Transmission Owner shall either, within 60 calendar days of completion of the verification, for each recommended addition or removal of a Transmission station or Transmission substation:

- Modify its identification under Requirement ~~R1~~R5 consistent with the recommendation; or
- Document the technical basis for not modifying the identification in accordance with the recommendation.

6.4. ~~**2.4.**~~ Each Transmission Owner shall implement procedures, such as the use of non-disclosure agreements, for protecting sensitive or confidential information made available to the unaffiliated ~~third party~~third-party verifier and to protect or

exempt sensitive or confidential information developed pursuant to this Reliability Standard from public disclosure.

M6. ~~**M2.**~~ Examples of acceptable evidence may include, but are not limited to, dated written or electronic documentation that the Transmission Owner completed an unaffiliated third party verification of the Requirement ~~R1~~R5 risk assessment and satisfied all of the applicable provisions of Requirement ~~R2~~R6, including, if applicable, documenting the technical basis for not modifying the ~~Requirement R1~~ identification in Requirements R1, R2, R3, R4, and R5 as specified under Part ~~2.3~~6.3. Additionally, examples of evidence may include, but are not limited to, written or electronic documentation of procedures to protect information under Part ~~2.4~~6.4.

R7. ~~**R3.**~~ For a primary control center(s) identified by the Transmission Owner according to Requirement ~~R1~~R5, Part ~~1.2~~5.3 that a) operationally controls an identified Transmission station or Transmission substation verified according to Requirement ~~R2~~R6, and b) is not under the operational control of the Transmission Owner: the Transmission Owner shall, within seven calendar days following completion of Requirement ~~R2~~R6, notify the Transmission Operator that has operational control of the primary control center of such identification and the date of completion of Requirement ~~R2. *[VRF*~~R6. *[Violation Risk Factor: Lower; Time-Horizon: Long-term Planning]*

7.1. ~~**3.1.**~~ If a Transmission station or Transmission substation previously identified under ~~Requirement~~Requirements R1 and R5 and verified according to Requirement ~~R2~~R6 is removed from the identification during a subsequent risk assessment performed according to Requirement ~~R1~~R5 or a verification according to Requirement ~~R2~~R6, then the Transmission Owner shall, within seven calendar days following the verification or the subsequent risk assessment, notify the Transmission Operator that has operational control of the primary control center of the removal.

M7. ~~**M3.**~~ Examples of acceptable evidence may include, but are not limited to, ~~dated~~ written or electronic notifications or communications that the Transmission Owner notified each Transmission Operator, as applicable, according to Requirement ~~R3~~R7.

R8. ~~**R4.**~~ Each Transmission Owner that identified a Transmission station, Transmission substation, or a primary control center in Requirement ~~R1~~R5 and verified according to Requirement ~~R2~~R6, and each Transmission Operator notified by a Transmission Owner according to Requirement ~~R3~~R7, shall conduct an evaluation of the potential threats and vulnerabilities of a physical attack to each of their respective Transmission station(s), Transmission substation(s), and primary control center(s) identified in Requirement ~~R1~~R5 and verified according to Requirement ~~R2~~R6. The evaluation shall consider the following: *[~~VRF~~Violation Risk Factor: Medium; Time-Horizon: Operations Planning, Long-term Planning]*

8.1. ~~**4.1.**~~ Unique characteristics of the identified and verified Transmission station(s), Transmission substation(s), and primary control center(s);

8.2. ~~**4.2.**~~ Prior history of attack(s) on similar facilities taking into account the frequency, geographic proximity, and severity of past physical security related events; and

8.3. ~~**4.3.**~~ Intelligence or threat warnings received from sources such as law enforcement, the Electric Reliability Organization (ERO), the Electricity Sector Information Sharing and Analysis Center (~~ES-ISAC~~E-ISAC), U.S. federal and/or Canadian governmental agencies, or their successors.

~~M4~~M8. Examples of evidence may include, but are not limited to, dated written or electronic documentation that the Transmission Owner or Transmission Operator conducted an evaluation of the potential threats and vulnerabilities of a physical attack to their respective Transmission station(s), Transmission substation(s), and primary control center(s) as specified in Requirement ~~R4~~R8.

R9. ~~**R5.**~~ Each Transmission Owner that identified a Transmission station, Transmission substation, or primary control center in Requirement ~~R1~~R5 and verified according to Requirement ~~R2~~R6, and each Transmission Operator notified by a Transmission Owner according to Requirement ~~R3~~R7, shall develop and implement a documented physical security plan(s) that covers their respective Transmission station(s), Transmission substation(s), and primary control center(s). The physical security plan(s) shall be developed within 120 calendar days following the completion of Requirement ~~R2~~R6 and executed according to the timeline specified in the physical security plan(s). The physical security plan(s) shall include the following attributes: [~~*VRF*~~*Violation Risk Factor*: *High; Time-Horizon: Long-term Planning*]

9.1. ~~**5.1.**~~ Resiliency or security measures designed collectively to deter, detect, delay, assess, communicate, and respond to potential physical threats and vulnerabilities identified during the evaluation conducted in Requirement ~~R4~~R8.

9.2. ~~**5.2.**~~ Law enforcement contact and coordination information.

9.3. ~~**5.3.**~~ A timeline for executing the physical security enhancements and modifications specified in the physical security plan.

9.4. ~~**5.4.**~~ Provisions to evaluate evolving physical threats, and their corresponding security measures, to the Transmission station(s), Transmission substation(s), or primary control center(s).

~~M5~~M9. Examples of evidence may include, but are not limited to, dated written or electronic documentation of its physical security plan(s) that covers their respective identified and verified Transmission station(s), Transmission substation(s), and primary control center(s) as specified in Requirement ~~R5~~R6, and additional evidence demonstrating execution of the physical security plan according to the timeline specified in the physical security plan.

R10. ~~**R6.**~~ Each Transmission Owner that identified a Transmission station, Transmission substation, or primary control center in Requirement ~~R1~~R5 and verified according to Requirement ~~R2~~R6, and each Transmission Operator notified by a Transmission Owner according to Requirement ~~R3~~R7, shall have an unaffiliated third party review the evaluation performed under Requirement ~~R4~~R8 and the security plan(s) developed under Requirement ~~R5~~R9. The review may occur concurrently with or after completion of the evaluation performed under Requirement ~~R4~~R8 and the security plan development under Requirement ~~R5. *[VRF*~~R9. *[Violation Risk Factor: Medium; Time-Horizon: Long-term Planning]*

10.1. ~~**6.1.**~~ Each Transmission Owner and Transmission Operator shall select an unaffiliated ~~third party~~third-party reviewer from the following:

- An entity or organization with electric industry physical security experience and whose review staff has at least one member who holds either a Certified Protection Professional (CPP) or Physical Security Professional (PSP) certification~~.~~;
- An entity or organization approved by the ERO~~.~~;
- A governmental agency with physical security expertise~~.~~; or
- An entity or organization with demonstrated law enforcement, government, or military physical security expertise.

10.2. ~~**6.2.**~~ The Transmission Owner or Transmission Operator, respectively, shall ensure that the unaffiliated ~~third party~~third-party review is completed within 90 calendar days of completing the security plan(s) developed in Requirement ~~R5~~R9. The unaffiliated ~~third party~~third-party review may, but is not required to, include recommended changes to the evaluation performed under Requirement ~~R4~~R8 or the security plan(s) developed under Requirement ~~R5~~R9.

10.3. ~~**6.3.**~~ If the unaffiliated ~~third party~~third-party reviewer recommends changes to the evaluation performed under Requirement ~~R4~~R8 or security plan(s) developed under Requirement ~~R5~~R9, the Transmission Owner or Transmission Operator shall, within 60 calendar days of the completion of the unaffiliated third party review, for each recommendation:

- Modify its evaluation or security plan(s) consistent with the recommendation; or
- Document the reason(s) for not modifying the evaluation or security plan(s) consistent with the recommendation.

10.4. ~~**6.4.**~~ Each Transmission Owner and Transmission Operator shall implement procedures, such as the use of non-disclosure agreements, for protecting sensitive or confidential information made available to the unaffiliated ~~third party~~third-party reviewer and to protect or exempt sensitive or confidential

information developed pursuant to this Reliability Standard from public disclosure.

~~M6~~M10. Examples of evidence may include, but are not limited to, written or electronic documentation that the Transmission Owner or Transmission Operator had an unaffiliated third party review the evaluation performed under Requirement ~~R4~~R8 and the security plan(s) developed under Requirement ~~R5~~R9 as specified in Requirement ~~R6~~R10 including, if applicable, documenting the reasons for not modifying the evaluation or security plan(s) in accordance with a recommendation under Part ~~6.3~~10.3. Additionally, examples of evidence may include, but are not limited to, written or electronic documentation of procedures to protect information under Part ~~6.4~~10.4.

C. Compliance

1. Compliance Monitoring Process

1.1. Compliance Enforcement Authority

~~: As defined in the NERC Rules of Procedure,~~ "Compliance Enforcement Authority" means NERC or the Regional Entity in their respective roles of monitoring and enforcing compliance with the NERC Reliability Standards.

~~**1.2. Evidence Retention**~~

1.2. Evidence Retention: The following evidence retention ~~periods~~period(s) identify the period of time an entity is required to retain specific evidence to demonstrate compliance. For instances where the evidence retention period specified below is shorter than the time since the last audit, the Compliance Enforcement Authority may ask an entity to provide other evidence ~~during an on-site visit~~ to show that it was compliant for the ~~full-time~~full-time period since the last audit.

The Transmission Owner and Transmission Operator shall keep data or evidence to show compliance, as identified below, unless directed by its Compliance Enforcement Authority ~~()~~ to retain specific evidence for a longer period of time as part of an investigation~~.~~:

The responsible entities shall retain ~~documentation as~~ evidence, as per Requirements R1 through R10, for three years.

If a Responsible Entity is found non-compliant, it shall keep information related to the non-compliance until mitigation is complete and approved, or for the time specified above, whichever is longer.

The CEA shall keep the last audit records and all requested and submitted subsequent audit records~~, subject to the confidentiality provisions of Section 1500 of the Rules of Procedure and the provisions of Section 1.4 below~~.

~~**1.3. Compliance Monitoring and Assessment Processes:**~~

~~Compliance Audits~~

~~Self-Certifications~~
~~Spot Checking~~

1.3. Compliance Monitoring and Enforcement Program: "Compliance Monitoring Enforcement Program" or "CMEP" means, depending on the context (1) the NERC Compliance Monitoring and Enforcement Program (Appendix 4C to the NERC Rules of Procedure) or the Commission-approved program of a Regional Entity, as applicable, or (2) the program, department or organization within

NERC or a Regional Entity that is responsible for performing compliance monitoring and enforcement activities with respect to Registered Entities' compliance with Reliability Standards.

Compliance Violation Investigations Severity Levels

Self-Reporting

Complaints Text

2. Table of Compliance Elements

R #	Time Horizon	VRF	Violation Severity Levels (CIP-014-3)		
		Lower VSL	Moderate VSL	High VSL	Severe VSL
R1	Long-term Planning	The Transmission Owner performed an initial risk assessment but did so after the date specified in the implementation plan for performing the initial risk assessment but less than or equal to two calendar months after that date; OR The Transmission Owner that has identified in its previous risk assessment one or more Transmission stations or Transmission substations that if rendered inoperable or damaged could result in instability, uncontrolled separation, or Cascading within an Interconnection	The Transmission Owner performed an initial risk assessment but did so more than two calendar months after the date specified in the implementation plan for performing the initial risk assessment but less than or equal to four calendar months after that date; OR The Transmission Owner that has identified in its previous risk assessment one or more Transmission stations or Transmission substations that if rendered inoperable or damaged could result in instability, uncontrolled separation, or Cascading within an Interconnection performed a subsequent	The Transmission Owner performed an initial risk assessment but did so more than four calendar months after the date specified in the implementation plan for performing the initial risk assessment but less than or equal to six calendar months after that date; OR The Transmission Owner that has identified in its previous risk assessment one or more Transmission stations or Transmission substations that if rendered inoperable or damaged could result in instability, uncontrolled separation, or Cascading within an Interconnection performed a subsequent	The Transmission Owner performed an initial risk assessment but did so more than six calendar months after the date specified in the implementation plan for performing the initial risk assessment; OR The Transmission Owner failed to perform an initial risk assessment; OR The Transmission Owner that has identified in its previous risk assessment one or more Transmissionstations or Transmission substations that if rendered inoperable or damaged could result in instability, uncontrolled separation,

R #	Time Horizon	VRF Violation Severity Levels (CIP-014-3)			
		Lower VSL	Moderate VSL	High VSL	Severe VSL
		performed a subsequent risk assessment but did so after 30 calendar months but less than or equal to 32 calendar months; OR The Transmission Owner that has not identified in its previous risk assessment any Transmission stations or Transmission substations that if rendered inoperable or damaged could result in instability, uncontrolled separation, or Cascading within an Interconnection performed a subsequent risk assessment but did so after 60 calendar months but less than or	risk assessment but did so after 32 calendar months but less than or equal to 34 calendar months; OR The Transmission Owner that has not identified in its previous risk assessment any Transmission stations or Transmission substations that if rendered inoperable or damaged could result in instability, uncontrolled separation, or Cascading within an Interconnection performed a subsequent risk assessment but did so after 62 calendar months but less than or equal to 64 calendar months.	risk assessment but did so after 34 calendar months but less than or equal to 36 calendar months; OR The Transmission Owner that has not identified in its previous risk assessment any Transmission stations or Transmission substations that if rendered inoperable or damaged could result in instability, uncontrolled separation, or Cascading within an Interconnection performed a subsequent risk assessment but did so after 64 calendar months but less than or equal to 66 calendar months; OR	or Cascading within an Interconnection performed a subsequent risk assessment but did so after more than 36 calendar months; OR The Transmission Owner that has identified in its previous risk assessment one or more Transmission stations or Transmission substations that if rendered inoperable or damaged could result in instability, uncontrolledseparation, or Cascading within an Interconnection failed to perform a risk assessment; OR The Transmission Owner that has not identified in its previous risk assessment any

R #	Time Horizon	VRF Violation Severity Levels (CIP-014-3)			
		Lower VSL	Moderate VSL	High VSL	Severe VSL
		equal to 62 calendar months.		The Transmission Owner performed a risk assessment but failed to include Part 1.2.	Transmission stations or Transmission substations that if rendered inoperable or damaged could result in instability, uncontrolled separation, or Cascading within an Interconnection performed a subsequent risk assessment but did so after more than 66 calendar months; OR The Transmission Owner that has not identified in its previous risk assessment any Transmission station and Transmission substations that if rendered inoperable or damaged could result in instability, uncontrolled separation, or Cascading within an Interconnection failed to perform a subsequent risk assessment.

	Violation Severity Levels			
	Lower VSL	**Moderate VSL**	**High VSL**	**Severe VSL**
R1.	The Transmission Owner identified each applicable Transmission station(s) and Transmission substation(s) per Attachment 1, but did so after 36 calendar months, but less than or equal to 38 calendar months. OR The Transmission Owner identified each applicable Transmission station(s) and Transmission substation(s), but failed to identify less than or equal to 10% of the applicable Transmission station(s) and Transmission substation(s) per Attachment 1.	The Transmission Owner identified each applicable Transmission station(s) and Transmission substation(s) per Attachment 1, but did so after 38 calendar months, but less than or equal to 40 calendar months. OR The Transmission Owner identified each applicable Transmission station(s) and Transmission substation(s), but failed to identify more than 10% and less than or equal to 20% of the applicable Transmission station(s) and Transmission substation(s) per Attachment 1.	The Transmission Owner identified each applicable Transmission station(s) and Transmission substation(s) per Attachment 1, but did so after 40 calendar months, but less than or equal to 42 calendar months. OR The Transmission Owner identified each applicable Transmission station(s) and Transmission substation(s), but failed to identify more than 20% and less than or equal to 30% of the applicable Transmission station(s) and Transmission substation(s) per Attachment 1.	The Transmission Owner failed to identify each applicable Transmission station(s) and Transmission substation(s) per Attachment 1. OR The Transmission Owner identified each applicable Transmission station(s) and Transmission substation(s) per Attachment 1, but did so after more than 42 calendar months. OR The Transmission Owner identified each applicable Transmission station(s) and Transmission substation(s), but failed to identify more than 30% of the applicable Transmission station(s) and Transmission substation(s) per Attachment 1.
R2.	N/A	N/A	N/A	The Transmission Owner with applicable Transmission

				station(s) or Transmission substation(s) identified in Requirement R1 did not identify existing BES Transmission station(s) and BES Transmission substation(s), irrespective of ownership, within 1500 feet or 457 meters (the shortest distance, measured substation fence line to substation fence line) of an applicable Transmission station or Transmission substation identified in Requirement R1.
R3.	N/A	The Transmission Owner has a risk assessment methodology that failed to include one of the requirements listed in Parts 3.1 through 3.3.	The Transmission Owner has a risk assessment methodology that failed to include two of the requirements listed in Parts 3.1 through 3.3.	The Transmission Owner has a risk assessment methodology that failed to include all three of the requirements listed in Parts 3.1 through 3.3. OR The Transmission Owner does not have a risk assessment methodology.
R4.	The Transmission Owner with applicable Transmission station(s) and Transmission substation(s) identified in Requirement R1 owned by multiple Transmission Owners failed to coordinate with each appropriate Transmission Owner(s) to determine and document their individual and joint responsibilities for documenting a risk assessment	The Transmission Owner with applicable Transmission station(s) and Transmission substation(s) identified in Requirement R1 owned by multiple Transmission Owners failed to coordinate with each appropriate Transmission Owner(s) to determine and document their individual and joint responsibilities for documenting a risk assessment	The Transmission Owner with applicable Transmission station(s) and Transmission substation(s) identified in Requirement owned by multiple Transmission Owners failed to coordinate with each appropriate Transmission Owner(s) to determine and document their individual and joint responsibilities for documenting a risk assessment	The Transmission Owner with applicable Transmission station(s) and Transmission substation(s) identified in Requirement R1 owned by multiple Transmission Owners failed to coordinate with each appropriate Transmission Owner(s) to determine and document their individual and joint responsibilities for documenting a risk assessment

	methodology under Requirement R3 and for performing any required risk assessments per Requirement R5 for less than or equal to 25% of jointly owned applicable Transmission station(s) and Transmission substation(s).	methodology under Requirement R3 and for performing any required risk assessments per Requirement R5 for more than 25% and less than or equal to 50% of jointly owned applicable Transmission station(s) and Transmission substation(s).	methodology under Requirement R3 and for performing any required risk assessments per Requirement R5 for more than 50% and less than or equal to 75% of jointly owned applicable Transmission station(s) and Transmission substation(s).	methodology under Requirement R3 and for performing any required risk assessments per Requirement R5 for more than 75% and less than or equal to 100% of any evidence for jointly owned applicable Transmission station(s) and Transmission substation(s).
R5.	The Transmission Owner performed a risk assessment, but did so after 36 calendar months, but less than or equal to 38 calendar months.	The Transmission Owner performed a risk assessment, but did so after 38 calendar months, but less than or equal to 40 calendar months. OR The Transmission Owner performed a risk assessment inconsistent with one of the methodology requirements listed in Requirement R3, Parts 3.1 through 3.3.	The Transmission Owner performed a risk assessment, but did so after 40 calendar months, but less than or equal to 42 calendar months. OR The Transmission Owner performed a risk assessment inconsistent with two of the methodology requirements listed in Requirement R3, Parts 3.1 through 3.3. OR The Transmission Owner performed a risk assessment, but failed to include the primary control center identified in Part 5.2.	The Transmission Owner performed a risk assessment, but did so after more than 42 calendar months. OR The Transmission Owner performed a risk assessment inconsistent with all three of the methodology requirements listed in Requirement R3, Parts 3.1 through 3.3.
~~R2~~ ~~Long-term Planning~~	The Transmission Owner had an unaffiliated third party verify the risk assessment performed under Requirement ~~R1~~R5, but did so	The Transmission Owner had an unaffiliated third party verify the risk assessment performed under Requirement ~~R1~~R5, but did so	The Transmission Owner had an unaffiliated third party verify the risk assessment performed under Requirement ~~R1~~R5, but did so	The Transmission Owner had an unaffiliated third party verify the risk assessment performed under Requirement ~~R1~~R5, but did so

~~Medium~~R6.	in more than 90 calendar days, but less than or equal to 100 calendar days following completion of Requirement ~~R1;~~R5. OR The Transmission Owner had an unaffiliated third party verify the risk assessment performed under Requirement ~~R1~~R5 and modified or documented the technical basis for not modifying its identification under Requirement ~~R1~~R5 as required by ~~Part 2.3~~Part6.3, but did so more than 60 calendar days and less than or equal to 70 calendar days from completion of the third party verification.	more than 100 calendar days, but less than or equal to 110 calendar days following completion of Requirement ~~R1;~~R5. ~~Or~~OR The Transmission Owner had an unaffiliated third party verify the risk assessment performed under Requirement ~~R1~~R5 and modified or documented the technical basis for not modifying its identification under Requirement ~~R1~~R5 as required by Part ~~2.3~~6.3, but did so more than 70 calendar days and less than or equal to 80 calendar days from completion of the third party verification.	more than 110 calendar days, but less than or equal to 120 calendar days following completion of Requirement ~~R1;~~R5. OR The Transmission Owner had an unaffiliated third party verify the risk assessment performed under Requirement ~~R1~~R5 and modified or documented the technical basis for not modifying its identification under Requirement ~~R1~~R5 as required by Part ~~2.3~~6.3, but did so more than 80 calendar days from completion of the third party verification~~;~~. OR The Transmission Owner had an unaffiliated third party verify the risk assessment performed under Requirement ~~R1~~R5, but failed to modify or document the technical basis for not modifying its identification under ~~R1~~R4 as required by Part ~~2.3~~6.3.	more than 120 calendar days following completion of Requirement ~~R1;~~R5. OR The Transmission Owner failed to have an unaffiliated third party verify the risk assessment performed under Requirement ~~R1;~~R5. OR The Transmission Owner had an unaffiliated third party verify the risk assessment performed under Requirement ~~R1~~R5, but failed to implement procedures for protecting information per Part ~~2.4~~6.4.
~~R3~~	The Transmission Owner notified the Transmission	The Transmission Owner notified the Transmission	The Transmission Owner notified the Transmission	The Transmission Owner notified the Transmission

Long-term Planning LowerR7.	Operator that operates the primary control center as specified in Requirement R3R7, but did so more than seven calendar days and less than or equal to nine calendar days following the completion of Requirement R2;R6. OR The Transmission Owner notified the Transmission Operator that operates the primary control center of the removal from the identification in Requirement R1R5, but did so more than seven calendar days and less than or equal to nine calendar days following the verification or the subsequent risk assessment.	Operator that operates the primary control center as specified in Requirement R3R7, but did so more than nine calendar days and less than or equal to 11 calendar days following the completion of Requirement R2;R6. OR The Transmission Owner notified the Transmission Operator that operates the primary control center of the removal from the identification in Requirement R1R5, but did so more than nine calendar days and less than or equal to 11 calendar days following the verification or the subsequent risk assessment.	Operator that operates the primary control center as specified in Requirement R3R7, but did so more than 11 calendar days and less than or equal to 13 calendar days following the completion of Requirement R2;R6. OR The Transmission Owner notified the Transmission Operator that operates the primary control center of the removal from the identification in Requirement R1R5, but did so more than 11 calendar days and less than or equal to 13 calendar days following the verification or the subsequent risk assessment.	Operator that operates the primary control center as specified in Requirement R3R7, but did so more than 13 calendar days following the completion of Requirement R2;R6. OR The Transmission Owner failed to notify the Transmission Operator that it operates a control center identified in Requirement R1;R5. OR The Transmission Owner notified the Transmission Operator that operates the primary control center of the removal from the identification in Requirement R1R5, but did so more than 13 calendar days following the verification or the subsequent risk assessment. OR The Transmission Owner failed to notify the Transmission Operator that operates the primary control center of the removal from

				the identification in Requirement ~~R1~~R5.

		Violation Severity Levels			
		Lower VSL	**Moderate VSL**	**High VSL**	**Severe VSL**
~~R4~~R8.	**~~Operations Planning, Long-term Planning~~**	**~~Medium~~** N/A	The ~~Responsible Entity~~responsible entity conducted an evaluation of the potential physical threats and vulnerabilities to each of its Transmission station(s), Transmission substation(s), and primary control center(s) identified in Requirement ~~R1~~R5, but failed to consider one of Parts ~~4.1~~8.1 through ~~4.3~~8.3 in the evaluation.	The ~~Responsible Entity~~responsible entity conducted an evaluation of the potential physical threats and vulnerabilities to each of its Transmission station(s), Transmission substation(s), and primary control center(s) identified in Requirement ~~R1~~R5, but failed to consider two of Parts ~~4.1~~8.1 through ~~4.3~~8.3 in the evaluation.	The ~~Responsible Entity~~responsible entity failed to conduct an evaluation of the potential physical threats and vulnerabilities to each of its Transmission station(s), Transmission substation(s), and primary control center(s) identified in Requirement ~~R1;~~R5. OR The ~~Responsible Entity~~responsible entity conducted an evaluation of the potential physical threats and vulnerabilities to each of its Transmission station(s), Transmission substation(s), and primary control center(s) identified in Requirement ~~R1~~R5, but failed to consider Parts ~~4.1~~8.1 through ~~4.3~~8.3.

		Violation Severity Levels			
		Lower VSL	**Moderate VSL**	**High VSL**	**Severe VSL**
~~R5~~R9.	~~Long-term Planning~~	~~High~~ The ~~Responsible Entity~~responsible entity developed and implemented a documented physical security plan(s) that covers each of its Transmission station(s), Transmission substation(s), and primary control center(s) identified in Requirement ~~R1~~R5, but did so more than 120 calendar days, but less than or equal to 130 calendar days after completing Requirement ~~R2;~~R6. OR The ~~Responsible Entity~~responsible entity developed and implemented a documented physical security plan(s) that covers its Transmission station(s), Transmission substation(s), and primary control center(s) identified in Requirement ~~R1~~R5 and verified according to	The ~~Responsible Entity~~responsible entity developed and implemented a documented physical security plan(s) that covers each of its Transmission station(s), Transmission substation(s), and primary control center(s) identified in Requirement ~~R1~~R5, but did so more than 130 calendar days, but less than or equal to 140 calendar days after completing Requirement ~~R2;~~R6. OR The ~~Responsible Entity~~responsible entity developed and implemented a documented physical security plan(s) that covers its Transmission station(s), Transmission substation(s), and primary control center(s) identified in Requirement ~~R1~~R5 and verified according to Requirement ~~R2~~R6, but failed to include two of	The ~~Responsible Entity~~responsible entity developed and implemented a documented physical security plan(s) that covers each of its Transmission station(s), Transmission substation(s), and primary control center(s) identified in Requirement ~~R1~~R5, but did so more than 140 calendar days, but less than or equal to 150 calendar days after completing Requirement ~~R2;~~R6. OR The ~~Responsible Entity~~responsible entity developed and implemented a documented physical security plan(s) that covers its Transmission station(s), Transmission substation(s), and primary control center(s) identified in Requirement ~~R1~~R5 and verified according to Requirement ~~R2~~R6, but failed to include three of	The ~~Responsible Entity~~responsible entity developed and implemented a documented physical security plan(s) that covers each of its Transmission station(s), Transmission substation(s), and primary control center(s) identified in Requirement ~~R1~~R5, but did so more than 150 calendar days after completing the verification in Requirement ~~R2;~~ R6. OR The ~~Responsible Entity~~responsible entity failed to develop and implement a documented physical security plan(s) that covers its Transmission station(s), Transmission substation(s), and primary control center(s) identified in Requirement ~~R1~~R5 and verified according to Requirement ~~R2~~R6. OR

		Violation Severity Levels			
		Lower VSL	**Moderate VSL**	**High VSL**	**Severe VSL**
		Requirement ~~R2~~R6, but failed to include one of Parts ~~5.1~~9.1 through ~~5.4~~9.4 in the plan.	Parts ~~5.1~~9.1 through ~~5.4~~9.4 in the plan.	Parts ~~5.1~~9.1 through ~~5.4~~9.4 in the plan.	The ~~Responsible Entity~~responsible entity developed and implemented a documented physical security plan(s) that covers its Transmission station(s), Transmission substation(s), and primary control center(s) identified in Requirement ~~R1~~R5 and verified according to Requirement ~~2~~R6, but failed to include Parts ~~5.1~~9.1 through ~~5.4~~9.4 in the plan.
~~R6~~R10.	**~~Long-term Planning~~**	~~**Medium**~~ The ~~Responsible Entity~~responsible entity had an unaffiliated third party review the evaluation performed under Requirement ~~R4~~R8 and the security plan(s) developed under Requirement ~~R5~~R9, but did so in more than 90 calendar days, but less than or equal to 100 calendar days~~;~~. OR	The ~~Responsible Entity~~responsible entity had an unaffiliated third party review the evaluation performed under Requirement ~~R4~~R8 and the security plan(s) developed under Requirement ~~R5~~R9, but did so in more than 100 calendar days, but less than or equal to 110 calendar days~~;~~. OR The ~~Responsible Entity~~responsible entity	The ~~Responsible Entity~~responsible entity had an unaffiliated third party review the evaluation performed under Requirement ~~R4~~R8 and the security plan(s) developed under Requirement ~~R5~~R9, but did so more than 110 calendar days, but less than or equal to 120 calendar days~~;~~. OR The ~~Responsible Entity had~~responsible entity failed	The ~~Responsible Entity~~responsible entity failed to have an unaffiliated third party review the evaluation performed under Requirement ~~R4~~R8 and the security plan(s) developed under Requirement ~~R5~~R9 in more than 120 calendar days~~;~~. ~~OR~~ ~~The Responsible Entity failed to have an unaffiliated third party~~

		Violation Severity Levels			
		Lower VSL	**Moderate VSL**	**High VSL**	**Severe VSL**
		The ~~Responsible Entity~~responsible entity had an unaffiliated third party review the evaluation performed under Requirement ~~R4~~R8 and the security plan(s) developed under Requirement ~~R5~~R9 and modified or documented the reason for not modifying the security plan(s) as specified in Part ~~6.3~~10.3, but did so more than ~~60~~70 calendar days and less than or equal to ~~70~~80 calendar days following completion of the third party review.	had an unaffiliated third party review the evaluation performed under Requirement ~~R4~~R8 and the security plan(s) developed under Requirement ~~R5~~R9 and modified or documented the reason for not modifying the security plan(s) as specified in Part ~~6.3~~10.3, but did so more than ~~70 calendar days and less than or equal to~~ 80 calendar days following completion of the third party review. OR The responsible entity had an unaffiliated third party review the evaluation performed under Requirement R8 and the security plan(s) developed under Requirement R9, but did not document the reason for not modifying the security plan(s) as specified in Part 10.3.	to have an unaffiliated third party review the evaluation performed under Requirement ~~R4~~R8 and the security plan(s) developed under Requirement ~~R5 and modified or documented the reason for not modifying the security plan(s) as specified in Part 6.3 but did so more than 80 calendar days following completion of the third party review;~~R9. OR The ~~Responsible Entity~~responsible entity had an unaffiliated third party review the evaluation performed under Requirement ~~R4~~R8 and the security plan(s) developed under Requirement ~~R5~~R9, but ~~did not document the reason for not modifying the security plan(s) as specified in~~failed to implement procedures for	~~review the evaluation performed under Requirement R4 and the security plan(s) developed under Requirement R5;~~ ~~OR~~ ~~The Responsible Entity had an unaffiliated third party review the evaluation performed under Requirement R4 and the security plan(s) developed under Requirement R5 but failed to implement procedures for protecting information per Part 6.4.~~

		Violation Severity Levels			
		Lower VSL	Moderate VSL	High VSL	Severe VSL
				protecting information per Part ~~6.3~~10.4.	

D. Regional Variances

None.

E. Interpretations

None.

F. Associated Documents

~~None.~~

CIP-014-4 Implementation Plan

CIP-014-4 Technical Rationale Document

Version History

Version	Date	Action	Change Tracking
1	October 1, 2015	Effective Date	New
2	April 16, 2015	Revised to meet FERC Order 802 directive to remove “widespread”.	Revision
2	May 7, 2015	Adopted by the NERC Board of Trustees	
2	July 14, 2015	FERC Letter Order in Docket No. RD15-4-000 approving CIP-014-2	
3	January 19, 2022	Revised to remove Compliance Section 1.4	Revision
3	June 16, 2022	FERC Letter Order in Docket No. RD22-3-000 approving Modifications to CIP-014-3	Revision
3	June 16,2022	Effective Date	Revision
4	TBD	Revisions made by the Project 2023-06 drafting team	Revision

Guidelines and Technical Basis

Section 4Attachment 1 — Applicability Criteria

The purpose of Reliability Standard CIP-014 is to protect Transmission stations and Transmission substations, and their associated primary control centers that if rendered inoperable or damaged as a result of a physical attack could result in instability, uncontrolled separation, or Cascading within an Interconnection. To properly include those entities that own or operate such Facilities, the Reliability Standard CIP-014 first applies to Transmission Owners that own Transmission Facilities that meet the specific criteria in Applicability Section 4.1.1.1 through 4.1.1.4. The Facilities described in Applicability Section 4.1.1.1 through 4.1.1.4 mirror those Transmission Facilities that meet the bright line criteria for "Medium Impact" Transmission Facilities under Attachment 1 of Reliability Standard CIP-002-5.1. Each Transmission Owner that owns Transmission Facilities that meet the criteria in Section 4.1.1.1 through 4.1.1.4 is required to perform a risk assessment as specified in Requirement R1 to identify its Transmission stations and Transmission substations, and their associated primary control centers, that if rendered inoperable or damaged as a result of a physical attack could result in instability, uncontrolled separation, or Cascading within an Interconnection. The Standard Drafting Team (SDT) expects this population will be small and that many Transmission Owners that meet the applicability of this standard will not actually identify any such Facilities. Only those Transmission Owners with Transmission stations or Transmission substations identified in the risk assessment (and verified under Requirement R2) have performance obligations under Requirements R3 through R6.

This standard also applies to Transmission Operators. A Transmission Operator's obligations under the standard, however, are only triggered if the Transmission Operator is notified by an applicable Transmission Owner under Requirement R3 that the Transmission Operator operates a primary control center that operationally controls a Transmission station(s) or Transmission substation(s) identified in the Requirement R1 risk assessment. A primary control center operationally controls a Transmission station or Transmission substation when the control center's electronic actions can cause direct physical action at the identified Transmission station or Transmission substation, such as opening a breaker, as opposed to a control center that only has information from the Transmission station or Transmission substation and must coordinate direct action through another entity. Only Transmission Operators who are notified that they have primary control centers under this standard have performance obligations under Requirements R4 through R6. In other words, primary control center for purposes of this Standard is the control center that the Transmission Owner or Transmission Operator, respectively, uses as its primary, permanently manned site to physically operate a Transmission station or Transmission substation that is identified in Requirement R1 and verified in Requirement R2. Control centers that provide back-up capability are not applicable, as they are a form of resiliency and intentionally redundant.

The SDT considered several options for bright line criteria that could be used to determine applicability and provide an initial threshold that defines the set of Transmission stations and Transmission substations that would meet the directives of the FERC order on physical security (*i.e.*, those that could cause instability, uncontrolled separation, or Cascading within an

~~Interconnection). The SDT determined that using the criteria for Medium Impact Transmission Facilities in Attachment 1 of CIP-002-5.1 would provide a conservative threshold for defining which Transmission stations and Transmission substations must be included in the risk assessment in Requirement R1 of CIP-014. Additionally, the SDT concluded that using the CIP-002-5.1 Medium Impact criteria was appropriate because it has been approved by stakeholders, NERC, and FERC, and its use provides a technically sound basis to determine which Transmission Owners should conduct the risk assessment. As described in CIP-002-5.1, the failure of a Transmission station or Transmission substation that meets the Medium Impact criteria could have the capability to result in exceeding one or more Interconnection Reliability Operating Limits (IROLs). The SDT understands that using this bright line criteria to determine applicability may require some Transmission Owners to perform risk assessments under Requirement R1 that will result in a finding that none of their Transmission stations or Transmission substations would pose a risk of instability, uncontrolled separation, or Cascading within an Interconnection. However, the SDT determined that higher bright lines could not be technically justified to ensure inclusion of all Transmission stations and Transmission substations, and their associated primary control centers that, if rendered inoperable or damaged as a result of a physical attack could result in instability, uncontrolled separation, or Cascading within an Interconnection. Further guidance and technical basis for the bright line criteria for Medium Impact Facilities can be found in the Guidelines and Technical Basis section of CIP-002-5.1.~~

~~Additionally, the SDT determined that it was not necessary to include Generator Operators and Generator Owners in the Reliability Standard. First, Transmission stations or Transmission substations interconnecting generation facilities are considered when determining applicability. Transmission Owners will consider those Transmission stations and Transmission substations that include a Transmission station on the high side of the Generator Step-up transformer (GSU) using Applicability Section 4.1.1.1 and 4.1.1.2. As an example, a Transmission station or Transmission substation identified as a Transmission Owner facility that interconnects generation will be subject to the Requirement R1 risk assessment if it operates at 500kV or greater or if it is connected at 200 kV – 499kV to three or more other Transmission stations or Transmission substations and has an "aggregate weighted value" exceeding 3000 according to the table in Applicability Section 4.1.1.2. Second, the Transmission analysis or analyses conducted under Requirement R1 should take into account the impact of the loss of generation connected to applicable Transmission stations or Transmission substations. Additionally, the FERC order does not explicitly mention generation assets and is reasonably understood to focus on the most critical Transmission Facilities. The diagram below shows an example of a station.~~

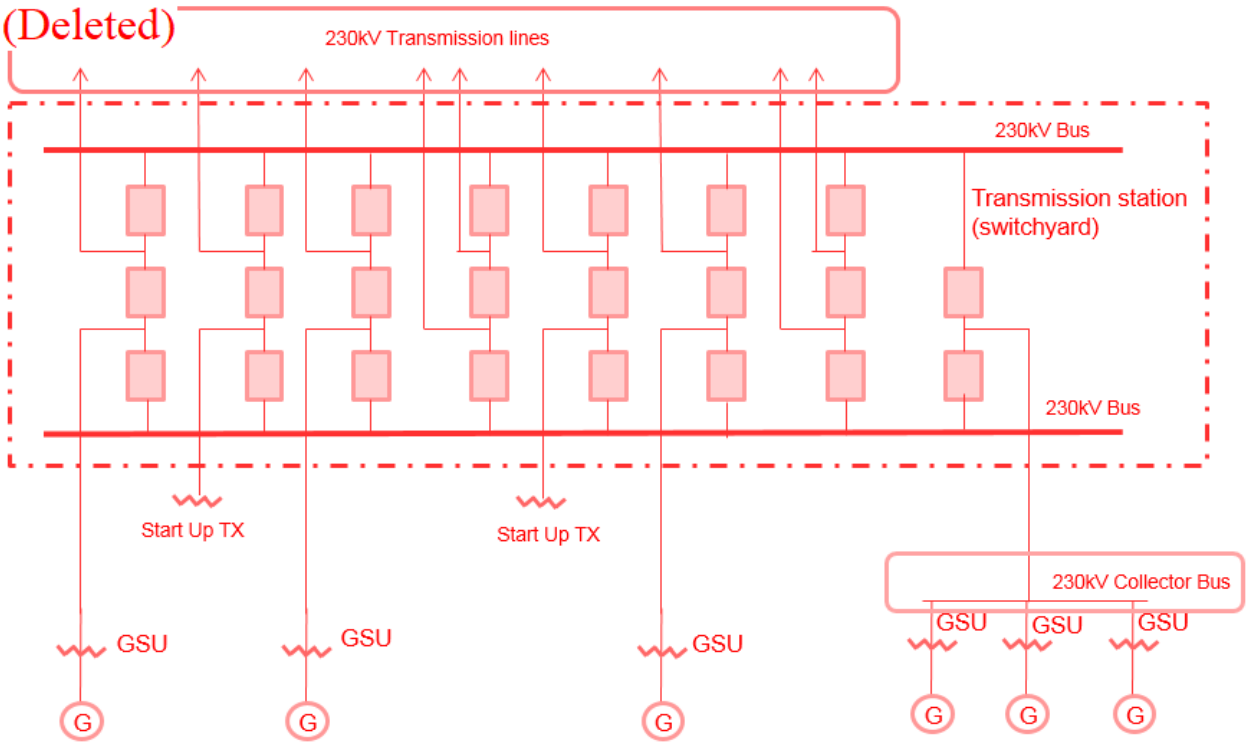

~~Also, the SDT uses the phrase "Transmission stations or Transmission substations" to recognize the existence of both stations and substations. Many entities in industry consider a substation to be a location with physical borders (i.e. fence, wall, etc.) that contains at least an autotransformer. Locations also exist that do not contain autotransformers, and many entities in industry refer to those locations as stations (switching stations or switchyards). Therefore, the SDT chose to use both "station" and "substation" to refer to the locations where groups of Transmission Facilities exist.~~

~~On the issue of joint ownership, the SDT recognizes that this issue is not unique to CIP-014, and expects that the applicable Transmission Owners and Transmission Operators will develop memorandums of understanding, agreements, Coordinated Functional Registrations, or procedures, etc., to designate responsibilities under CIP-014 when joint ownership is at issue, which is similar to what many entities have completed for other Reliability Standards.~~

~~The language contained in the applicability section regarding the collector bus is directly copied from CIP-002-5.1, Attachment 1, and has no additional meaning within the CIP-014 standard.~~

~~Requirement R1~~

~~The initial risk assessment required under Requirement R1 must be completed on or before the effective date of the standard. Subsequent risk assessments are to be performed at least once every 30 or 60 months depending on the results of the previous risk assessment per Requirement R1, Part 1.1. In performing the risk assessment under Requirement R1, the Transmission Owner should first identify their population of Transmission stations and Transmission substations that meet the criteria contained in Applicability Section 4.1.1.~~

~~Requirement R1 then requires the Transmission Owner to perform a risk assessment, consisting of a transmission analysis, to determine which of those Transmission stations and Transmission Substations if rendered inoperable or damaged could result in instability, uncontrolled separation, or Cascading within an Interconnection. The requirement is not to require identification of, and thus, not intended to bring within the scope of the standard a Transmission station or Transmission substation unless the applicable Transmission Owner determines through technical studies and analyses based on objective analysis, technical expertise, operating experience and experienced judgment that the loss of such facility would have a critical impact on the operation of the Interconnection in the event the asset is rendered inoperable or damaged. In the November 20, 2014 Order, FERC reiterated that "only an instability that has a "critical impact on the operation of the interconnection" warrants finding that the facility causing the instability is critical under Requirement R1." The Transmission Owner may determine the criteria for critical impact by considering, among other criteria, any of the following:~~

- ~~Criteria or methodology used by Transmission Planners or Planning Coordinators in TPL-001-4, Requirement R6~~
- ~~NERC EOP-004-2 reporting criteria~~
- ~~Area or magnitude of potential impact~~

~~The standard does not mandate the specific analytical method for performing the risk assessment. The Transmission Owner has the discretion to choose the specific method that best suites its needs. As an example, an entity may perform a Power Flow analysis and stability analysis at a variety of load levels.~~

~~Performing Risk Assessments~~

~~The Transmission Owner has the discretion to select a transmission analysis method that fits its facts and system circumstances. To mandate a specific approach is not technically desirable and may lead to results that fail to adequately consider regional, topological, and system circumstances. The following guidance is only an example on how a Transmission Owner may perform a power flow and/or stability analysis to identify those Transmission stations and Transmission substations that if rendered inoperable or damaged as a result of a physical attack could result in instability, uncontrolled separation, or Cascading within an Interconnection. An entity could remove all lines, without regard to the voltage level, to a single Transmission station or Transmission substation and review the simulation results to assess system behavior to determine if Cascading of Transmission Facilities, uncontrolled separation, or voltage or frequency instability is likely to occur over a significant area of the Interconnection. Using engineering judgment, the Transmission Owner (possibly in consultation with regional planning or operation committees and/or ISO/RTO committee input) should develop criteria (e.g. imposing a fault near the removed Transmission station or Transmission substation) to identify a contingency or parameters that result in potential instability, uncontrolled separation, or Cascading within an Interconnection. Regional consultation on these matters is likely to be helpful and informative, given that the inputs for the risk assessment and the attributes of what constitutes instability, uncontrolled separation, or Cascading within an Interconnection will~~

likely vary from region-to-region or from ISO-to-ISO based on topology, system characteristics, and system configurations. Criteria could also include post-contingency facilities loadings above a certain emergency rating or failure of a power flow case to converge. Available special protection systems (SPS), if any, could be applied to determine if the system experiences any additional instability which may result in uncontrolled separation. Example criteria may include:

(a) Thermal overloads beyond facility emergency ratings;

(b) Voltage deviation exceeding ± 10%; or

(c) Cascading outage/voltage collapse; or

(d) Frequency below under-frequency load-shed points

Periodicity

A Transmission Owner who identifies one or more Transmission stations or Transmission substations (as verified under Requirement R2) that if rendered inoperable or damaged could result in instability, uncontrolled separation, or Cascading within an Interconnection is required to conduct a risk assessment at least once every 30 months. This period ensures that the risk assessment remains current with projected conditions and configurations in the planned system. This risk assessment, as the initial assessment, must consider applicable planned Transmission stations and Transmission substations to be in service within 24 months. The 30 month timeframe aligns with the 24 month planned to be in service date because the Transmission Owner is provided the flexibility, depending on its planning cycle and the frequency in which it may plan to construct a new Transmission station or Transmission substation to more closely align these dates. The requirement is to conduct the risk assessment at least once every 30 months, so for a Transmission Owner that believes it is better to conduct a risk assessment once every 24 months, because of its planning cycle, it has the flexibility to do so.

Transmission Owners that have not identified any Transmission stations or Transmission substations (as verified under Requirement R2) that if rendered inoperable or damaged could result in instability, uncontrolled separation, or Cascading within an Interconnection are unlikely to see changes to their risk assessment in the Near-Term Planning Horizon. Consequently, a 60 month periodicity for completing a subsequent risk assessment is specified.

Identification of Primary Control Centers

After completing the risk assessment specified in Requirement R1, it is important to additionally identify the primary control center that operationally controls each Transmission station or Transmission substation that if rendered inoperable or damaged could result in instability, uncontrolled separation, or Cascading within an Interconnection. A primary control center "operationally controls" a Transmission station or Transmission substation when the control center's electronic actions can cause direct physical actions at the identified Transmission station and Transmission substation, such as opening a breaker.

Requirement R2

This requirement specifies verification of the risk assessment performed under Requirement R1 by an entity other than the owner or operator of the Requirement R1 risk assessment.

A verification of the risk assessment by an unaffiliated third party, as specified in Requirement R2, could consist of:

1. Certifying that the Requirement R1 risk assessment considers the Transmission stations and Transmission substations identified in Applicability Section 4.1.1.
2. Review of the model used to conduct the risk assessment to ensure it contains sufficient system topology to identify Transmission stations and Transmission substations that if rendered inoperable or damaged could cause instability, uncontrolled separation, or Cascading within an Interconnection.
3. Review of the Requirement R1 risk assessment methodology.

This requirement provides the flexibility for a Transmission Owner to select from unaffiliated registered and non-registered entities with transmission planning or analysis experience to perform the verification of the Requirement R1 risk assessment. The term unaffiliated means that the selected verifying entity cannot be a corporate affiliate (*i.e.*, the verifying or third party reviewer cannot be an entity that corporately controls, is controlled by or is under common control with, the Transmission Owner). The verifying entity also cannot be a division of the Transmission Owner that operates as a functional unit.

The prohibition on registered entities using a corporate affiliate to conduct the verification, however, does not prohibit a governmental entity (e.g., a city, a municipality, a U.S. federal power marketing agency, or any other political subdivision of U.S. or Canadian federal, state, or provincial governments) from selecting as the verifying entity another governmental entity within the same political subdivision. For instance, a U.S. federal power marketing agency may select as its verifier another U.S. federal agency to conduct its verification so long as the selected entity has transmission planning or analysis experience. Similarly, a Transmission Owner owned by a Canadian province can use a separate agency of that province to perform the verification. The verifying entity, however, must still be a third party and cannot be a division of the registered entity that operates as a functional unit.

Requirement R2 also provides that the "verification may occur concurrent with or after the risk assessment performed under Requirement R1." This provision is designed to provide the Transmission Owner the flexibility to work with the verifying entity throughout (*i.e.*, concurrent with) the risk assessment, which for some Transmission Owners may be more efficient and effective. In other words, a Transmission Owner could collaborate with their unaffiliated verifying entity to perform the risk assessment under Requirement R1 such that both Requirement R1 and Requirement R2 are satisfied concurrently. The intent of Requirement R2 is to have an entity other than the owner or operator of the facility to be involved in the risk assessment process and have an opportunity to provide input. Accordingly, Requirement R2 is designed to allow entities the discretion to have a two-step process, where the Transmission Owner performs the risk assessment and subsequently has a third party review that assessment, or a one-step process, where the entity collaborates with a third party to perform the risk assessment.

Characteristics to consider in selecting a third party reviewer could include:

- Registered Entity with applicable planning and reliability functions.
- Experience in power system studies and planning.
- The entity's understanding of the MOD standards, TPL standards, and facility ratings as they pertain to planning studies.
- The entity's familiarity with the Interconnection within which the Transmission Owner is located.

With respect to the requirement that Transmission owners develop and implement procedures for protecting confidential and sensitive information, the Transmission Owner could have a method for identifying documents that require confidential treatment. One mechanism for protecting confidential or sensitive information is to prohibit removal of sensitive or confidential information from the Transmission Owner's site. Transmission Owners could include such a prohibition in a non-disclosure agreement with the verifying entity.

A Technical feasibility study is not required in the Requirement R2 documentation of the technical basis for not modifying the identification in accordance with the recommendation.

On the issue of the difference between a verifier in Requirement R2 and a reviewer in Requirement R6, the SDT indicates that the verifier will confirm that the risk assessment was completed in accordance with Requirement R1, including the number of Transmission stations and substations identified, while the reviewer in Requirement R6 is providing expertise on the manner in which the evaluation of threats was conducted in accordance with Requirement R4, and the physical security plan in accordance with Requirement R5. In the latter situation there is no verification of a technical analysis, rather an application of experience and expertise to provide guidance or recommendations, if needed.

Parts 2.4 and 6.4 require the entities to have procedures to protect the confidentiality of sensitive or confidential information. Those procedures may include the following elements:

1. Control and retention of information on site for third-party verifiers/reviewers.
2. Only "need to know" employees, etc., get the information.
3. Marking documents as confidential
4. Securely storing and destroying information when no longer needed.
5. Not releasing information outside the entity without, for example, General Counsel sign-off.

Requirement R3

Some Transmission Operators will have obligations under this standard for certain primary control centers. Those obligations, however, are contingent upon a Transmission Owner first completing the risk assessment specified by Requirement R1 and the verification specified by Requirement R2. Requirement R3 is intended to ensure that a Transmission Operator that has operational control of a primary control center identified in Requirement R1 receive notice so

that the Transmission Operator may fulfill the rest of the obligations required in Requirements R4 through R6. Since the timing obligations in Requirements R4 through R6 are based upon completion of Requirement R2, the Transmission Owner must also include within the notice the date of completion of Requirement R2. Similarly, the Transmission Owner must notify the Transmission Operator of any removals from identification that result from a subsequent risk assessment under Requirement R1 or as a result of the verification process under Requirement R2.

Requirement R4

This requirement requires owners and operators of facilities identified by the Requirement R1 risk assessment and that are verified under Requirement R2 to conduct an assessment of potential threats and vulnerabilities to those Transmission stations, Transmission substations, and primary control centers using a tailored evaluation process. Threats and vulnerabilities may vary from facility to facility based on any number of factors that include, but are not limited to, location, size, function, existing physical security protections, and attractiveness as a target.

In order to effectively conduct a threat and vulnerability assessment, the asset owner may be the best source to determine specific site vulnerabilities, but current and evolving threats may best be determined by others in the intelligence or law enforcement communities. A number of resources have been identified in the standard, but many others exist and asset owners are not limited to where they may turn for assistance. Additional resources may include state or local fusion centers, U.S. Department of Homeland Security, Federal Bureau of Investigations (FBI), Public Safety Canada, Royal Canadian Mounted Police, and InfraGard chapters coordinated by the FBI.

The Responsible Entity is required to take a number of factors into account in Parts 4.1 to 4.3 in order to make a risk-based evaluation under Requirement R4.

To assist in determining the current threat for a facility, the prior history of attacks on similarly protected facilities should be considered when assessing probability and likelihood of occurrence at the facility in question.

Resources that may be useful in conducting threat and vulnerability assessments include:

- NERC Security Guideline for the Electricity Sector: Physical Security.
- NERC Security Guideline: Physical Security Response.
- ASIS International General Risk Assessment Guidelines.
- ASIS International Facilities Physical Security Measure Guideline.
- ASIS International Security Management Standard: Physical Asset Protection.
- Whole Building Design Guide – Threat/Vulnerability Assessments.

Requirement R5

This requirement specifies development and implementation of a security plan(s) designed to protect against attacks to the facilities identified in Requirement R1 based on the assessment performed under Requirement R4.

Requirement R5 specifies the following attributes for the physical security plan:

- *Resiliency or security measures designed collectively to deter, detect, delay, assess, communicate, and respond to potential physical threats and vulnerabilities identified during the evaluation conducted in Requirement R4.*

  Resiliency may include, among other things:

  a. System topology changes,

  b. Spare equipment,

  c. Construction of a new Transmission station or Transmission substation.

  While most security measures will work together to collectively harden the entire site, some may be allocated to protect specific critical components. For example, if protection from gunfire is considered necessary, the entity may only install ballistic protection for critical components, not the entire site.

- *Law enforcement contact and coordination information.*

  Examples of such information may be posting 9-1-1 for emergency calls and providing substation safety and familiarization training for local and federal law enforcement, fire department, and Emergency Medical Services.

- *A timeline for executing the physical security enhancements and modifications specified in the physical security plan.*

  Entities have the flexibility to prioritize the implementation of the various resiliency or security enhancements and modifications in their security plan according to risk, resources, or other factors. The requirement to include a timeline in the physical security plan for executing the actual physical security enhancements and modifications does not also require that the enhancements and modifications be completed within 120 days. The actual timeline may extend beyond the 120 days, depending on the amount of work to be completed.

- *Provisions to evaluate evolving physical threats, and their corresponding security measures, to the*Applicable Transmission station(s), or Transmission substation(s), *or primary control center(s).* are those that meet any of the following criteria:

1. Transmission Facilities operated at 500 kV or higher. For the purpose of this criterion, the collector bus for a generation plant is not considered a Transmission Facility, but is part of the generation interconnection Facility.

2. Transmission Facilities that are operating between 200 kV and 499 kV at a single station or substation, where the station or substation is connected at 200 kV or higher voltages to three or more other Transmission stations or substations and has an "aggregate weighted value" exceeding 3000 according to the table below. The "aggregate weighted value" for a

single station or substation is determined by summing the "weight value per line" shown in the table below for each incoming and each outgoing BES Transmission Line that is connected to another Transmission station or substation. For the purpose of this criterion, the collector bus for a generation plant is not considered a Transmission Facility, but is part of the generation interconnection Facility.

A registered entity's physical security plan should include processes and responsibilities for obtaining and handling alerts, intelligence, and threat warnings from various sources. Some of these sources could include the ERO, ES-ISAC, and US and/or Canadian federal agencies. This information should be used to reevaluate or consider changes in the security plan and corresponding security measures of the security plan found in R5.

Incremental changes made to the physical security plan prior to the next required third party review do not require additional third party reviews.

Voltage Value of a Line	Weight Value per Line
less than 200 kV (not applicable)	(not applicable)
200 kV to 299 kV	700
300 kV to 499 kV	1300
500 kV and above	N/A

Requirement R6

This requirement specifies review by an entity other than the Transmission Owner or Transmission Operator with appropriate expertise for the evaluation performed according to Requirement R4 and the security plan(s) developed according to Requirement R5. As with Requirement R2, the term unaffiliated means that the selected third party reviewer cannot be a corporate affiliate (*i.e.*, the third party reviewer cannot be an entity that corporately controls, is controlled by or is under common control with, the Transmission Operator). A third party reviewer also cannot be a division of the Transmission Operator that operates as a functional unit.

As noted in the guidance for Requirement R2, the prohibition on registered entities using a corporate affiliate to conduct the review, however, does not prohibit a governmental entity from selecting as the third party reviewer another governmental entity within the same political subdivision. For instance, a city or municipality may use its local enforcement agency, so long as the local law enforcement agency satisfies the criteria in Requirement R6. The third party reviewer, however, must still be a third party and cannot be a division of the registered entity that operates as a functional unit.

The Responsible Entity can select from several possible entities to perform the review:

- *An entity or organization with electric industry physical security experience and whose review staff has at least one member who holds either a Certified Protection Professional (CPP) or Physical Security Professional (PSP) certification.*

  In selecting CPP and PSP for use in this standard, the SDT believed it was important that if a private entity such as a consulting or security firm was engaged to conduct the third party review, they must tangibly demonstrate competence to conduct the review. This includes electric industry physical security experience and either of the premier security industry certifications sponsored by ASIS International. The ASIS certification program was initiated in 1977, and those that hold the CPP certification are board certified in security management. Those that hold the PSP certification are board certified in physical security.

- *An entity or organization approved by the ERO.*

- *A governmental agency with physical security expertise.*

- *An entity or organization with demonstrated law enforcement, government, or military physical security expertise.*

As with the verification under Requirement R2, Requirement R6 provides that the "review may occur concurrently with or after completion of the evaluation performed under Requirement R4 and the security plan development under Requirement R5." This provision is designed to provide applicable Transmission Owners and Transmission Operators the flexibility to work with the third party reviewer throughout (*i.e.*, concurrent with) the evaluation performed according to Requirement R4 and the security plan(s) developed according to Requirement R5, which for some Responsible Entities may be more efficient and effective. In other words, a Transmission Owner or Transmission Operator could collaborate with their unaffiliated third party reviewer to perform an evaluation of potential threats and vulnerabilities (Requirement R4) and develop a security plan (Requirement R5) to satisfy Requirements R4 through R6 simultaneously. The intent of Requirement R6 is to have an entity other than the owner or operator of the facility to be involved in the Requirement R4 evaluation and the development of the Requirement R5 security plans and have an opportunity to provide input on the evaluation and the security plan. Accordingly, Requirement R6 is designed to allow entities the discretion to have a two-step process, where the Transmission Owner performs the evaluation and develops the security plan itself and then has a third party review that assessment, or a one-step process, where the entity collaborates with a third party to perform the evaluation and develop the security plan.

~~Timeline~~

(Deleted graphics)-014-1 – Physical Security Process Flow

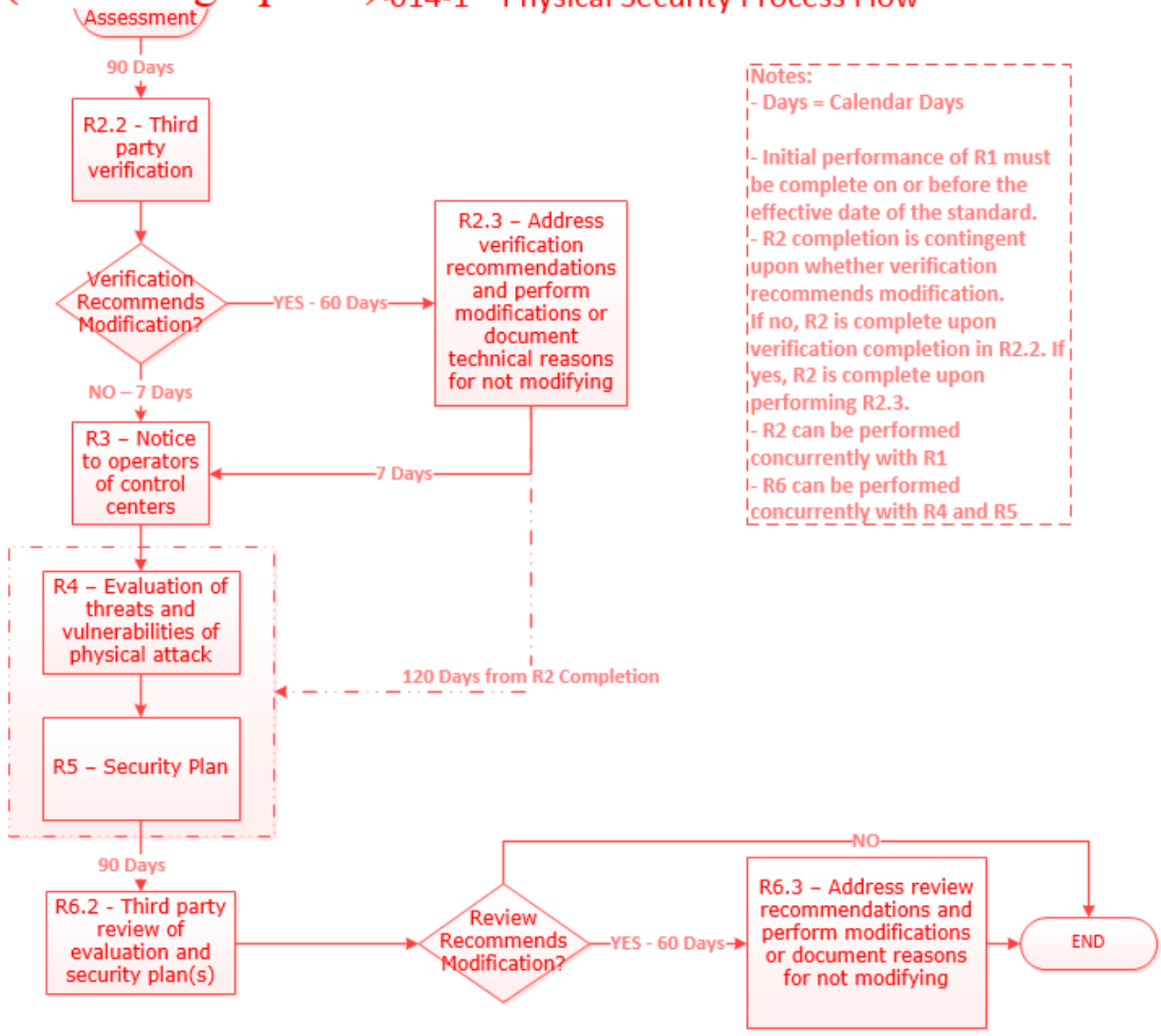

Rationale

During development of this standard, text boxes were embedded within the standard to explain the rationale for various parts of the standard. Upon BOT approval, the text from the rationale text boxes was moved to this section.

Rationale for Requirement R1:
This requirement meets the FERC directive from paragraph 6 of its March 7, 2014 order on physical security to perform a risk assessment to identify which facilities if rendered inoperable or damaged could impact an Interconnection through instability, uncontrolled separation, or cascading failures. The requirement is not intended to bring within the scope of the standard a Transmission station or Transmission substation unless the applicable Transmission Owner determines through technical studies and analyses based on objective analysis, technical expertise, operating experience and experienced judgment that the loss of such facility would have a critical impact on the operation of the Interconnection in the event the asset is rendered inoperable or damaged. In the November 20, 2014 Order, FERC reiterated that "only an instability that has a "critical impact on the operation of the interconnection" warrants finding that the facility causing the instability is critical under Requirement R1." The Transmission Owner may determine the criteria for critical impact by considering, among other criteria, any of the following:

- Criteria or methodology used by Transmission Planners or Planning Coordinators in TPL-001-4, Requirement R6
- NERC EOP-004-2 reporting criteria
- Area or magnitude of potential impact

Requirement R1 also meets the FERC directive for periodic reevaluation of the risk assessment by requiring the risk assessment to be performed every 30 months (or 60 months for an entity that has not identified in a previous risk assessment any Transmission stations or Transmission substations that if rendered inoperable or damaged could result in instability, uncontrolled separation, or Cascading within an Interconnection).

After identifying each Transmission station and Transmission substation that meets the criteria in Requirement R1, it is important to additionally identify the primary control center that operationally controls that Transmission station or Transmission substation (*i.e.*, the control center whose electronic actions can cause direct physical actions at the identified Transmission station and Transmission substation, such as opening a breaker, compared to a control center that only has the ability to monitor the Transmission station and Transmission substation and, therefore, must coordinate direct physical action through another entity).

Rationale for Requirement R2:
This requirement meets the FERC directive from paragraph 11 in the order on physical security requiring verification by an entity other than the owner or operator of the risk assessment performed under Requirement R1.

This requirement provides the flexibility for a Transmission Owner to select registered and non-registered entities with transmission planning or analysis experience to perform the verification of the Requirement R1 risk assessment. The term "unaffiliated" means that the selected verifying entity cannot be a corporate affiliate (*i.e.*, the verifying entity cannot be an entity that controls, is controlled by, or is under common control with, the Transmission owner). The verifying entity also cannot be a division of the Transmission Owner that operates as a functional unit. The term "unaffiliated" is not intended to prohibit a governmental entity from using another government entity to be a verifier under Requirement R2.

Requirement R2 also provides the Transmission Owner the flexibility to work with the verifying entity throughout the Requirement R1 risk assessment, which for some Transmission Owners may be more efficient and effective. In other words, a Transmission Owner could coordinate with their unaffiliated verifying entity to perform a Requirement R1 risk assessment to satisfy both Requirement R1 and Requirement R2 concurrently.

Planning Coordinator is a functional entity listed in Part 2.1. The Planning Coordinator and Planning Authority are the same entity as shown in the NERC Glossary of Terms Used in NERC Reliability Standards.

Rationale for Requirement R3:

Some Transmission Operators will have obligations under this standard for certain primary control centers. Those obligations, however, are contingent upon a Transmission Owner first identifying which Transmission stations and Transmission substations meet the criteria specified by Requirement R1, as verified according to Requirement R2. This requirement is intended to ensure that a Transmission Operator that has operational control of a primary control center identified in Requirement R1, Part 1.2 of a Transmission station or Transmission substation verified according to Requirement R2 receives notice of such identification so that the Transmission Operator may timely fulfill its resulting obligations under Requirements R4 through R6. Since the timing obligations in Requirements R4 through R6 are based upon completion of Requirement R2, the Transmission Owner must also include notice of the date of completion of Requirement R2. Similarly, the Transmission Owner must notify the Transmission Operator of any removals from identification that result from a subsequent risk assessment under Requirement R1 or the verification process under Requirement R2.

Rationale for Requirement R4:

This requirement meets the FERC directive from paragraph 8 in the order on physical security that the reliability standard must require tailored evaluation of potential threats and vulnerabilities to facilities identified in Requirement R1 and verified according to Requirement R2. Threats and vulnerabilities may vary from facility to facility based on factors such as the facility's location, size, function, existing protections, and attractiveness of the target. As such, the requirement does not mandate a one-size-fits-all approach but requires entities to account for the unique characteristics of their facilities.

~~Requirement R4 does not explicitly state when the evaluation of threats and vulnerabilities must occur or be completed. However, Requirement R5 requires that the entity's security plan(s), which is dependent on the Requirement R4 evaluation, must be completed within 120 calendar days following completion of Requirement R2. Thus, an entity has the flexibility when to complete the Requirement R4 evaluation, provided that it is completed in time to comply with the requirement in Requirement R5 to develop a physical security plan 120 calendar days following completion of Requirement R2.~~

~~**Rationale for Requirement R5:**~~
~~This requirement meets the FERC directive from paragraph 9 in the order on physical security requiring the development and implementation of a security plan(s) designed to protect against attacks to the facilities identified in Requirement R1 based on the assessment performed under Requirement R4.~~

~~**Rationale for Requirement R6:**~~
~~This requirement meets the FERC directive from paragraph 11 in the order on physical security requiring review by an entity other than the owner or operator with appropriate expertise of the evaluation performed according to Requirement R4 and the security plan(s) developed according to Requirement R5.~~

~~As with the verification required by Requirement R2, Requirement R6 provides Transmission Owners and Transmission Operators the flexibility to work with the third party reviewer throughout the Requirement R4 evaluation and the development of the Requirement R5 security plan(s). This would allow entities to satisfy their obligations under Requirement R6 concurrent with the satisfaction of their obligations under Requirements R4 and R5.~~

~~**3.** Transmission Facilities at a single station or substation location that are identified by its Reliability Coordinator, Planning Coordinator, or Transmission Planner as critical to the derivation of Interconnection Reliability Operating Limits (IROLs) and their associated contingencies.~~

~~**4.** Transmission Facilities identified as essential to meeting Nuclear Plant Interface Requirements (NPIRs).~~

Attachment 1 – Applicability Criteria

Applicable Transmission station(s) or Transmission substation(s) are those that meet any of the following criteria:

1. Transmission Facilities operated at 500 kV or higher. For the purpose of this criterion, the collector bus for a generation plant is not considered a Transmission Facility, but is part of the generation interconnection Facility.

2. Transmission Facilities that are operating between 200 kV and 499 kV at a single station or substation, where the station or substation is connected at 200 kV or higher voltages to three or more other Transmission stations or substations and has an "aggregate weighted value" exceeding 3,000 according to the table below. The "aggregate weighted value" for a single station or substation is determined by summing the "weight value per line" shown in the table below for each incoming and each outgoing Bulk Electric System Transmission Line that is connected to another Transmission station or substation. For the purpose of this criterion, the collector bus for a generation plant is not considered a Transmission Facility, but is part of the generation interconnection Facility.

Voltage Value of a Line	Weight Value per Line
less than 200 kV (not applicable)	(not applicable)
200 kV to 299 kV	700
300 kV to 499 kV	1,300
500 kV and above	N/A

3. Transmission Facilities at a single station or substation location that are identified by their Reliability Coordinator, Planning Coordinator, or Transmission Planner as critical to the derivation of Interconnection Reliability Operating Limits (IROLs) and their associated contingencies.

4. Transmission Facilities identified as essential to meeting Nuclear Plant Interface Requirements (NPIRs).

NERC
NORTH AMERICAN ELECTRIC RELIABILITY CORPORATION

Implementation Plan

Project 2023-06 CIP-014 Risk Assessment Refinement
Reliability Standard CIP-014-4

Applicable Standard(s)

- CIP-014-4 Physical Security

Requested Retirement(s)

- CIP-014-3 Physical Security

Applicable Entities

- Transmission Owner that owns or jointly owns one or more Transmission stations or Transmission substations that meet the applicability criteria of Attachment 1.
- Transmission Operator

  Exemption: Facilities in a "protected area," as defined in 10 C.F.R. § 73.2, within the scope of a security plan approved or accepted by the Nuclear Regulatory Commission are not subject to this Standard; or Facilities within the scope of a security plan approved or accepted by the Canadian Nuclear Safety Commission are not subject to this Reliability Standard.

General Considerations

In developing this Implementation Plan, the Drafting Team (DT) has determined that 24 calendar months for the CIP-014-4 implementation plan would allow adequate time for Transmission Owners and Transmission Operators to determine applicability, develop criteria, write or revise methodologies, perform assessments, and procure unaffiliated third parties for risk assessment verification (which some Transmission Owners have performed concurrently with their risk assessment analyses).

In determining an appropriate time frame, the DT considered: (1) the severity of the concerns highlighted in the FERC December 2022 order,[1] which directed NERC to evaluate the effectiveness of CIP-014-3 in mitigating the risks to the bulk power system associated with physical attacks; (2) the recommendations of the NERC report entitled Evaluation of the Physical Security Reliability Standard and Physical Security Attacks to the Bulk-Power System;[2] and (3) the Standard Authorization Request requirement that the DT correct any discrepancies between the study period, frequency of study, and the base case(s) a Transmission Owner uses. The DT determined that an Implementation Plan schedule of 24 calendar months appropriately balances the reliability

[1] *N. Am. Elec. Reliability Corp.*, 181 FERC ¶ 61,230 (2022).
[2] *See* NERC Report on CIP-014-3.pdf, filed with FERC on April 14, 2023).

need and risks against the time and resources required of entities to determine applicability, develop criteria, write or revise methodologies, perform assessments, and procure unaffiliated third parties for risk assessment verification.

Effective Date of CIP-014-4

Where approval by an applicable governmental authority (AGA) is required, Reliability Standard CIP-014-4 shall become effective on the first day of the first calendar quarter that is 24 calendar months after the effective date of the AGA's order approving the standard or as otherwise provided for by the AGA.

Where approval by an AGA is not required, Reliability Standard CIP-014-4 shall become effective on the first day of the first calendar quarter that is 24 calendar months after the date the standard is adopted by the NERC Board of Trustees or as otherwise provided for in that jurisdiction.

Initial Performance of Periodic Requirements

The initial risk assessment required by Reliability Standard CIP-014-4 Requirement R5, must be completed on or before the effective date of the standard. Subsequent risk assessments shall be performed no later than 36 calendar months following the effective date of Reliability Standard CIP-014-4.

Retirement Date

Reliability Standard CIP-014-3 shall be retired immediately prior to the effective date of Reliability Standard CIP-014-4 in the particular jurisdiction in which the revised standard is becoming effective.

NERC
NORTH AMERICAN ELECTRIC RELIABILITY CORPORATION

Implementation Plan

Project 2023-06 CIP-014 Risk Assessment Refinement
Reliability Standard CIP-014-4

Applicable Standard(s)

- CIP-014-4 Physical Security

Requested Retirement(s)

- CIP-014-3 Physical Security

Applicable Entities

- Transmission Owner that owns or jointly owns one or more Transmission stations or Transmission substations that meet the applicability criteria of Attachment 1.
- Transmission Operator

  Exemption: Facilities in a "protected area," as defined in 10 C.F.R. § 73.2, within the scope of a security plan approved or accepted by the Nuclear Regulatory Commission are not subject to this Standard; or Facilities within the scope of a security plan approved or accepted by the Canadian Nuclear Safety Commission are not subject to this Reliability Standard.

General Considerations

In developing this Implementation Plan, the Drafting Team (DT) has determined that 24 calendar months for the CIP-014-4 implementation plan would allow adequate time for Transmission Owners and Transmission Operators to determine applicability, develop criteria, write or revise methodologies, perform assessments, and procure unaffiliated third parties for risk assessment verification (which some Transmission Owners have performed concurrently with their risk assessment analyses).

In determining an appropriate time frame, the DT considered: (1) the severity of the concerns highlighted in the FERC's December 2022 order,[1] which directed NERC to evaluate the effectiveness of CIP-014-3 in mitigating the risks to the bulk power system associated with physical attacks; (1) (*N. Am. Elec. Reliability Corp.*, 181 FERC ¶ 61,230 (2022) (December 2022 Order); (2) the recommendations of the NERC report entitled Evaluation of the Physical Security Reliability Standard and Physical Security Attacks to the Bulk-Power System;[2] (*See* NERC Report on CIP-014-3.pdf, filed with FERC on April 14, 2023); and (3) the Standard Authorization Request requirement that the DT correct any discrepancies between the study period, frequency of study, and the base

[1] *N. Am. Elec. Reliability Corp.*, 181 FERC ¶ 61,230 (2022).
[2] *See* NERC Report on CIP-014-3.pdf, filed with FERC on April 14, 2023).

case(s) a Transmission Owner uses. The DT determined that an Implementation Plan schedule of 24 calendar months appropriately balances the reliability need and risks against the time and resources required of entities to determine applicability, develop criteria, write or revise methodologies, perform assessments, and procure unaffiliated third parties for risk assessment verification.

Effective Date of CIP-014-4

Where approval by an applicable governmental authority (AGA) is required, Reliability Standard CIP-014-4 shall become effective on the first day of the first calendar quarter that is 24 calendar months after the effective date of the AGA's order approving the standard or as otherwise provided for by the AGA.

Where approval by an AGA is not required, Reliability Standard CIP-014-4 shall become effective on the first day of the first calendar quarter that is 24 calendar months after the date the standard is adopted by the NERC Board of Trustees or as otherwise provided for in that jurisdiction.

Initial Performance of Periodic Requirements

The initial risk assessment required by Reliability Standard CIP-014-4 Requirement R5, must be completed on or before the effective date of the standard. Subsequent risk assessments shall be performed no later than 36 calendar months following the effective date of Reliability Standard CIP-014-4.

Retirement Date

Reliability Standard CIP-014-3 shall be retired immediately prior to the effective date of Reliability Standard CIP-014-4 in the particular jurisdiction in which the revised standard is becoming effective.

NERC
NORTH AMERICAN ELECTRIC RELIABILITY CORPORATION

Technical Rationale

Project 2023-06 CIP-014 Risk Assessment Refinement
Reliability Standard CIP-014-4 | May 2026

CIP-014-4 – Physical Security

In performing the risk assessment, the Transmission Owner (TO) should first identify their population of Transmission stations and Transmission substations that meet the criteria contained in Attachment 1. The Standard requires the TO to perform a risk assessment, consisting of transmission analyses to determine which of those Transmission stations and Transmission substations, if rendered inoperable or damaged, could result in instability, uncontrolled separation, or Cascading within an Interconnection.

The purpose of Reliability Standard CIP-014 is to protect Transmission stations and Transmission substations, and their associated primary control centers, that if rendered inoperable or damaged, due to a physical attack, could cause instability, uncontrolled separation, or Cascading within an Interconnection. To properly identify candidates for such Transmission station(s) and Transmission substation(s), the TO shall evaluate the criteria listed in Attachment 1.

Rationale for Requirement R1

The Standard Authorization Request (SAR) directed the drafting team (DT) to clarify the in-service window. It also directed the DT to correct any discrepancies between the study period, frequency of study, and the base case(s) a TO uses. In the previous version of CIP-014, the 30-month time frame and the 24-month planned-to-be-in-service date could, if not carefully applied, lead to gaps between models and study horizons. Per the SAR, CIP-014-4 has consolidated these multiple timelines into one.

Requirement R1 is revised to ensure that each TO establishes a list of applicable Transmission station(s) or Transmission substation(s) in accordance with Attachment 1. Aligning the 36 calendar months look ahead in Requirement R1 with the 36 calendar months risk assessment cycle ensures that system topology of the cases used to assess applicability is consistent with the system topology in the risk assessment models.

TOs shall review and, if necessary, update the list of applicable Transmission station(s) or Transmission substation(s) per Attachment 1 at least once every 36 calendar months. The list of applicable Transmission station(s) or Transmission substation(s) shall include existing Facilities and Transmission station(s) and Transmission substation(s) planned to be in service within 36 calendar months. The 36 calendar months risk assessment study cycle aligns with the 36 calendar months planned-to-be-in-service date. "Planned to be in-service" should be taken to mean all Transmission station(s) and Transmission substation(s) as modeled in the base cases.

Rationale for Requirement R2

The distance chosen in Requirement R2 is based on guidelines that considered a variety of plausible attack scenarios capable of rendering a substation inoperable.

The DT chose 1,500 feet or 457 meters (the shortest distance, measured substation fence line to substation fence line) in Requirement R2 after review of the Department of Homeland Security (DHS)-Department of Justice (DOJ) Bomb Threat Stand-Off Card. The Bomb Threat Stand-Off Card is a quick reference guide providing recommended evacuation and shelter-in-place distances for various types and sizes of Improvised Explosive Devices (IED), based on version of August 2025.[1]

The guidance above allowed the DT to draft language that clarified what study scenario(s) and other study assumptions are appropriate and reasonable considering the intent of CIP-014 and the potential range of issues during a physical attack. Simulations should incorporate the loss of station elements without the reliance on local system protection. Clarifying how to account for adjacent Transmission stations or Transmission substations of differing ownership as well as for those Transmission stations or Transmission substations within line-of-sight to each other. These provide limits to what the TO must study and avoid including an explicit representation of the physical event in the standard.

Accurate simulation of the event was deemed a priority of the DT. The DT felt that ownership of proximate substations, as identified in Requirement R2, was irrelevant to Bulk Electric System impact.

The Transmission station(s) or Transmission substation(s) identified in Requirement R2 are only intended for use in the Requirement R5 risk assessment and the Requirement R6 third-party verification to properly account for additional equipment that, if also damaged during an event, could lead to loss of additional Facilities. They are not intended to be subject to Requirements R7 through R10. Requirements R7 through R10 are only relevant for the Transmission station(s) or Transmission substation(s) identified in Requirement R1.

Rationale for Requirement R3

The new Requirement R3 fulfills the first item in the SAR to "clarify the risk assessment methods" and that the "methods should account for dynamic studies." Requirement R3 also fulfills other items in the SAR around case selection, technically supported rationales, the loss of communications, and local protection within the affected station. The previous Requirement R3 is now Requirement R7 of CIP-014-4.

Per Requirement R3, each TO is required to have a risk assessment methodology, including the criteria by which analytical results will be examined to identify Transmission station(s) or Transmission substation(s) that if rendered inoperable or damaged as a result of a physical attack could result in instability, uncontrolled separation, or Cascading within an Interconnection. The TO is not required to develop its own methodology and is free to use a methodology developed elsewhere, such as in coordination with neighboring TOs or Independent System Operators (ISOs).

Rationale for Requirement R3, Part 3.1

TOs should determine the amount of unacceptable load loss and generation loss within an Interconnection when determining the impact of an event to the Transmission system. The thresholds

[1] https://www.cisa.gov/resources-tools/resources/dhs-doj-bomb-threat-stand-card

identifying unacceptable generation and load losses should be the total of the losses within the TO's footprint and losses external to the TO's footprint. Criteria for measures such as load loss or generation loss should consider the impact to the Interconnection.

While the use of Recommended Interconnection Resource Loss Protection Criteria (RLPC) provides one approach to generation loss—setting these thresholds based on the two largest potential resource losses in an Interconnection as detailed in Attachment A of NERC Reliability Standard BAL-003-2—other methods may also be appropriate, as determined by the TO. The RLPC values should be taken from the latest approved version of NERC's annual 'Frequency Response Annual Analysis' report.

Use of the RLPC recommendations in accordance with the latest version of NERC's 'Frequency Response Annual Analysis' report is an example of technically justified thresholds for unacceptable generation and load loss within an Interconnection. Use of lower values than the RLPC recommendations is also technically justifiable. Use of higher values than the RLPC recommendations would require additional technical justification.

Large loss of generation or load due to the evaluated disturbance could result in severe System impacts. The documented risk assessment methodology shall include the amount of unacceptable load loss and generation loss, that could result in instability, uncontrolled separation, or Cascading within an Interconnection. Conditions and thresholds used for determining critical Transmission station(s) or Transmission substation(s), i.e., those that if rendered inoperable or damaged as a result of a physical attack could result in instability, uncontrolled separation, or Cascading within an Interconnection, should be part of the documented risk assessment methodology.

It is up to the TO to identify post-event measures that can be used to assess the criticality of a Transmission station or Transmission substation. Suggested measures are listed below. A TO can decide that one or more of the items are not applicable to their location within the interconnection and if any additional items should be included.

The following parameters can be used to evaluate the steady-state and/or dynamic analysis:

- Steady state voltages
- Transient voltage response
- Thermal loading of Facilities
- Relay loadability
- Rotor angle stability
- Frequency exceeding generator limits
- Frequency stability
- Acceptable damping of oscillations
- Cascading line tripping

- Steady-state voltage stability

Rationale for Requirement R3, Part 3.2
The performance of both steady state and dynamics simulations is required for all applicable Transmission station(s) and substation(s). Dynamic simulations are required by the standard because exclusively performing steady-state simulations is insufficient for determining whether the loss of a Transmission station or Transmission substation could result in instability, uncontrolled separation, or Cascading within an Interconnection.

Rationale for Requirement R3, Part 3.3
Historically, simulation of a three-phase Fault at applicable Transmission station(s) and Transmission substation(s) appears to be the prevalent assumption used by the majority of TOs in the performance of stability analyses for CIP-014 risk assessments. The DT has determined, however, that there may be specific locations or scenarios that merit the use of a different Fault type (or a sequence or progression of multiple Faults) more consistent with the occurrence of a physical attack for those locations or scenarios.

Rationale for Requirement R3, Part 3.3.1
The applicable Transmission substation or Transmission station is the station that is assumed to be under attack for the purposes of this standard. Any damage to Transmission stations or Transmission substations in proximity is assumed to be collateral damage. The intent of CIP-014 is to cover the case when the applicable Transmission station or Transmission substation becomes inoperable. The SAR refers to the "total loss of communication and protection equipment at the substation." Requirement R3, Part 3.3.1 uses the "prior loss" wording to eliminate difficulties when performing simulations. When exploring possible attack scenarios, it is possible to develop scenarios that allow a fault prior to the loss of communication and protection systems. Protection systems typically operate within a few cycles, so a short delay between the fault and the loss of the protection system could allow breakers to operate. "Prior loss of communication and Protection Systems" eliminates this possibility, so the fault should be studied without the availability of local communications or Protection Systems. The use of delayed clearing times, typically Zone 2, is necessary because the applicable substation has lost local protection and all communications with other substations.

Rationale for Requirement R3, Part 3.3.2
The relative locations of the applicable Transmission station or Transmission substation and the neighboring substation will determine the best way to evaluate and study the combinations of substations. Every substation identified in Requirement R2 must be studied in at least one combination with its applicable Transmission station or Transmission substation. For example, if there is a single neighboring substation near the applicable substation, then the applicable and neighboring substation should be studied together. If there are two or more neighboring substations that are close together and both within 1,500 feet of the applicable substation, then the responsible entity may study the applicable substation with the combination of the two neighbors. If there are two or more neighboring substations on different sides of the applicable substation, then it can make more sense to study the applicable substation with each proximity substation individually. For purposes of the simulations, the faults should be applied at the same time or after the faults applied to the applicable Transmission station or

Transmission substation depending on the simulated event and any restrictions of the simulation software. Not all software packages allow for multiple simultaneous faults. The protection and communication systems at the proximate substations are expected to operate normally, so delayed clearing is not necessary.

Rationale for Requirement R3, Part 3.3.3
The DT believes that requiring documented justification for Faults being selected, without specifying Fault type, allows TOs to determine on a location-by-location basis what is a credible high-severity scenario for a physical attack and furthermore how to appropriately model the associated stability simulations. The DT also believes that a single justification may be used for multiple locations. Requirement 3 Part 3.3.3 allows the TOs to determine the type of fault with documented justification. If a fault type and justification is relevant to multiple Transmission stations or Transmission substations, there is no need to repeatedly document the same justification.

Rationale for Requirement R3, Part 3.3.4
Each simulation should include the removal of all Elements that Protection Systems and other controls are expected to automatically disconnect for the event. After the prior loss of communication and Protection Systems at the applicable Transmission station or Transmission substation, other Protection Systems should operate as expected for the event considered. The accurate simulation of Protection System actions is essential for correctly identifying the risk of instability, uncontrolled separation, or Cascading within an Interconnection.

Rationale for Requirement R3, Part 3.3.5
While there are commonly used generic clearing times for remote clearing that are consistent across the industry, actual clearing times can be shorter or longer depending on conditions and design considerations at an individual TO. The difference of a few cycles can have a significant impact on the transient behavior of generating units, therefore, it is required that the risk analysis use actual or more conservative clearing times.

Rationale for Requirement R4
Joint ownership of Transmission substations and Transmission stations was discussed in the Guidelines and Technical Basis of previous versions of the CIP-014-3 standard, but because ownership was not addressed in the standard language, the CIP-014-4 Risk Assessment Refinement SAR required clarification which resulted in the new requirement R4. TOs that have applicable jointly owned Transmission substations and Transmission stations should coordinate and document their individual and joint responsibilities for CIP-014-4 Requirements R3 and R5. TOs should be able to demonstrate sole or joint ownership through one-line diagrams with ownership demarcations and/or a letter of attestation stating which stations are solely or jointly owned.

Rationale for Requirement R5
An objective of the CIP-014-3 Risk Assessment Refinement SAR was to align study periods, frequency of studies, and the powerflow models used for the studies. A 36-month periodicity was chosen for the Requirement R5 risk assessment to reduce the periodicity options from previous versions of the standard.

Additionally, a single study periodicity is more easily aligned with project in-service date considerations and model choices. As called for in Project Scope item 3 of the CIP-014-3 Risk Assessment Refinement SAR, the risk assessment must comply with the methodology developed in Requirement R3, so this language was explicitly added to Requirement R5.

TOs shall review and, if necessary, update the list of applicable Transmission station(s) or Transmission substation(s) per Attachment 1 at least once every 36 months. The list of applicable Transmission station(s) and Transmission substation(s) shall include existing or planned to be in service within 36 months Transmission station(s) and Transmission substation(s). The 36-month cycle for updating the list of applicable Transmission station(s) or Transmission substation(s) per Attachment 1 aligns with the annual cycle for performing Planning Assessments per NERC Standard TPL-001. The 36-month risk assessment study cycle aligns with the 36-month planned-to-be-in-service date.

In addition to the performance of the risk assessment using Transmission station(s) and Transmission substation(s) identified in Requirement R1, any proximate Transmission station(s) and Transmission substation(s) identified in Requirement R2 should also be included in the risk assessment. Furthermore, any Transmission station(s) and Transmission substation(s) assessed due to having been identified per Requirement R1 should also be run as part of a proximate Transmission station(s) and Transmission substation(s) group per Requirement R2 if such an identification is made.

Rationale for Requirement R5, Part 5.1
If a TO performs a steady state analysis and identifies a Transmission station or substation that, if rendered inoperable or damaged, could result in instability, uncontrolled separation, or Cascading within an Interconnection, then dynamic analysis is not required for that Transmission station or substation. If a TO performs a dynamic analysis and identifies a Transmission station or substation that, if rendered inoperable or damaged, could result in instability, uncontrolled separation, or Cascading within an Interconnection, then steady state analysis is not required for that Transmission station or substation.

Rationale for Requirement R5, Part 5.2
The intent of this Requirement is that TOs do not have to reassess already identified and protected Transmission stations or substations (Requirement R5 Part 5.3 and Requirements R7 through R10 still apply to those Transmission stations or substations). A new risk assessment will need to be performed if the TO wishes to determine whether or not a Transmission station or substation can be removed from identification and protection as outlined in Requirement R7 Part 7.1.

Rationale for Requirement R5, Part 5.3
Identification of Primary Control Centers: After completing the risk assessment under Requirement R5 and verified under Requirement R6, it is important to additionally identify the primary control center that operationally controls each Transmission station or Transmission substation, that if rendered inoperable or damaged could result in instability, uncontrolled separation, or Cascading within an Interconnection. A primary control center “operationally controls” a Transmission station or Transmission substation when the control center’s electronic actions can cause direct physical actions at the identified Transmission station and Transmission substation, such as opening a breaker.

Rationale for Implementation Plan

In developing the Implementation Plan, the DT has determined that 24 calendar months for the CIP-014-4 implementation plan would allow adequate time for TOs and Transmission Operators (TOPs) to determine applicability, develop criteria, write or revise methodologies, perform assessments, and procure unaffiliated third parties for risk assessment verification (which some TOs have performed concurrently with their risk assessment analyses.

Furthermore, given a) FERC's sense of urgency stated in their December 2022 order,[2] which directed NERC to evaluate the effectiveness of CIP-014-3 in mitigating the risks to the bulk power system associated with physical attacks, b) the findings of NERC's report to FERC on April 14, 2023 (Evaluation of the Physical Security Reliability Standard and Physical Security Attacks to the Bulk-Power System)[3], and c) the designation of Project 2023-06 as High Priority, the DT has determined that an Implementation Plan schedule of greater than 24 calendar months would not be responsive to the risks identified with sufficient urgency, and thus 24 calendar months is an appropriate timeframe. While the DT understands the time and resources required of entities to respond to this Implementation Plan, the DT believes that 24 calendar months properly balances the need to address the reliability risk and the time needed by entities to determine applicability, develop criteria, write or revise methodologies, perform assessments, and procure unaffiliated third parties for risk assessment verification.

CIP-014-4 Flowchart

The flowchart is a concise outline that guides through the steps for completing the risk assessment at least once every 36 calendar months, based on the Applicability in Attachment 1 and Requirements R1-R5.

[2] *N. Am. Elec. Reliability Corp.*, 181 FERC ¶ 61,230 (2022).

[3] *See* NERC Report on CIP-014-3.pdf, filed with FERC on April 14, 2023).

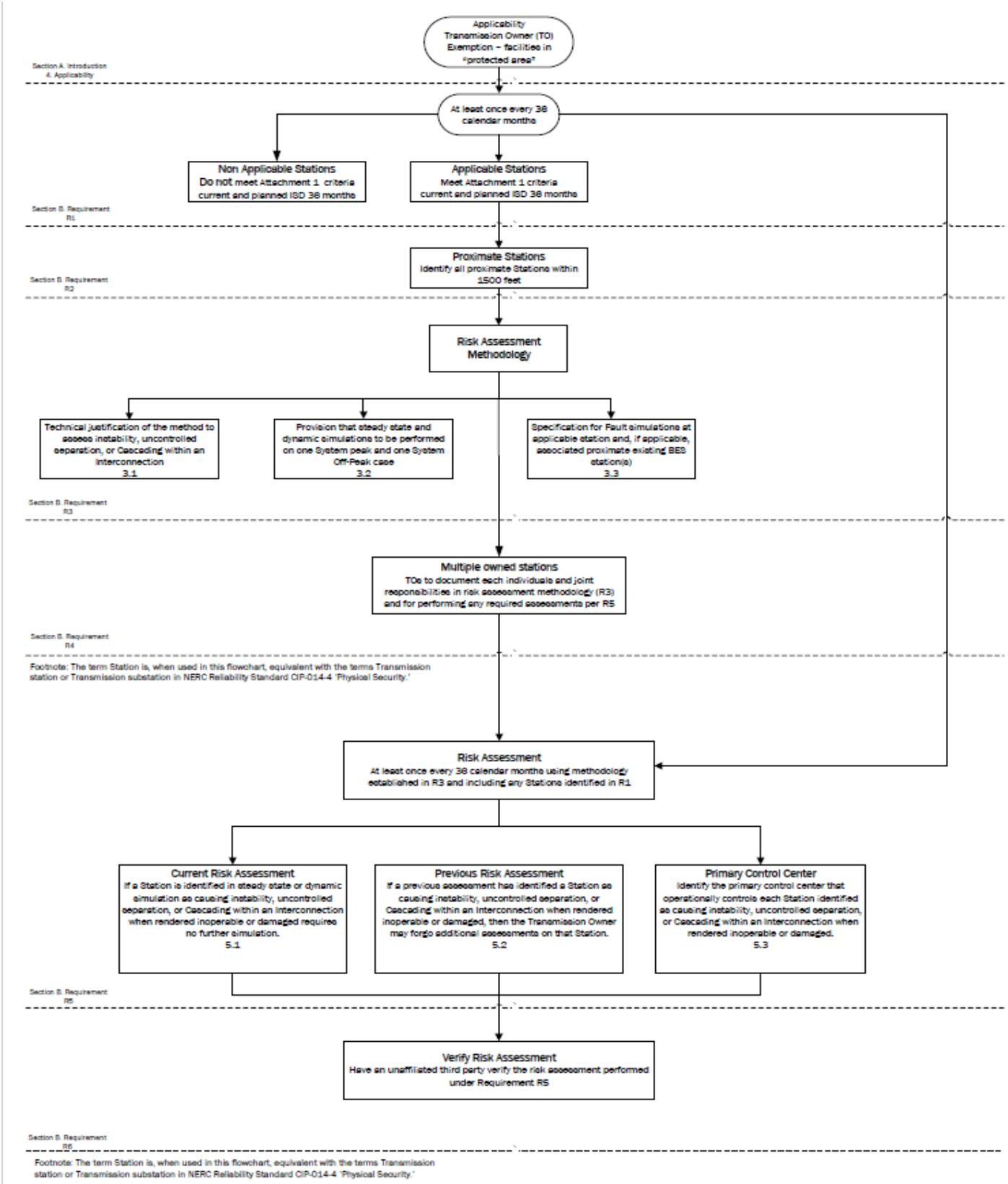
Applicability
Transmission Owner (TO) Exemption – facilities in "protected area"
Section A. Introduction 4. Applicability
At least once every 38 calendar months
Non Applicable Stations
Do not meet Attachment 1 criteria current and planned ISD 38 months
Applicable Stations
Meet Attachment 1 criteria current and planned ISD 38 months
Section B. Requirement R1
Proximate Stations
Identify all proximate Stations within 1500 feet
Section B. Requirement R2
Risk Assessment Methodology
Technical justification of the method to assess instability, uncontrolled separation, or Cascading within an Interconnection 3.1
Provision that steady state and dynamic simulations to be performed on one System peak and one System Off-Peak case 3.2
Specification for Fault simulations at applicable station and, if applicable, associated proximate existing BES station(s) 3.3
Section B. Requirement R3
Multiple owned stations
TOs to document each individuals and joint responsibilities in risk assessment methodology (R3) and for performing any required assessments per R5
Section B. Requirement R4
Footnote: The term Station is, when used in this flowchart, equivalent with the terms Transmission station or Transmission substation in NERC Reliability Standard CIP-014-4 'Physical Security.'
Risk Assessment
At least once every 38 calendar months using methodology established in R3 and including any Stations identified in R1
Current Risk Assessment
If a Station is identified in steady state or dynamic simulation as causing instability, uncontrolled separation, or Cascading within an Interconnection when rendered inoperable or damaged requires no further simulation. 5.1
Previous Risk Assessment
If a previous assessment has identified a Station as causing instability, uncontrolled separation, or Cascading within an Interconnection when rendered inoperable or damaged, then the Transmission Owner may forgo additional assessments on that Station. 5.2
Primary Control Center
Identify the primary control center that operationally controls each Station identified as causing instability, uncontrolled separation, or Cascading within an Interconnection when rendered inoperable or damaged. 5.3
Section B. Requirement R5
Verify Risk Assessment
Have an unaffiliated third party verify the risk assessment performed under Requirement R5
Section B. Requirement R6
Footnote: The term Station is, when used in this flowchart, equivalent with the terms Transmission station or Transmission substation in NERC Reliability Standard CIP-014-4 'Physical Security.'

Technical Rationale for Reliability Standard CIP-014-3

This section contains a "cut and paste" of the former Guidelines and Technical Basis (GTB) as-is of from CIP-014-3 standard to preserve any historical references. No modifications have been made.

Requirement R2 (This is Requirement R6 in CIP-014-4)
This requirement specifies verification of the risk assessment performed under Requirement R1 by an entity other than the owner or operator of the Requirement R1 risk assessment.

A verification of the risk assessment by an unaffiliated third party, as specified in Requirement R2, could consist of:

1. Certifying that the Requirement R1 risk assessment considers the Transmission stations and Transmission substations identified in Applicability Section 4.1.1.
2. Review of the model used to conduct the risk assessment to ensure it contains sufficient system topology to identify Transmission stations and Transmission substations that if rendered inoperable or damaged could cause instability, uncontrolled separation, or Cascading within an Interconnection.
3. Review of the Requirement R1 risk assessment methodology.

This requirement provides the flexibility for a TO to select from unaffiliated registered and non-registered entities with transmission planning or analysis experience to perform the verification of the Requirement R1 risk assessment. The term unaffiliated means that the selected verifying entity cannot be a corporate affiliate (i.e., the verifying or third party reviewer cannot be an entity that corporately controls, is controlled by, or is under common control with the TO). The verifying entity also cannot be a division of the TO that operates as a functional unit.

The prohibition on registered entities using a corporate affiliate to conduct the verification, however, does not prohibit a governmental entity (e.g., a city, a municipality, a U.S. federal power marketing agency, or any other political subdivision of U.S. or Canadian federal, state, or provincial governments) from selecting as the verifying entity another governmental entity within the same political subdivision. For instance, a U.S. federal power marketing agency may select as its verifier another U.S. federal agency to conduct its verification so long as the selected entity has transmission planning or analysis experience. Similarly, a TO owned by a Canadian province can use a separate agency of that province to perform the verification. The verifying entity, however, must still be a third party and cannot be a division of the registered entity that operates as a functional unit.

Requirement R2 also provides that the "verification may occur concurrent with or after the risk assessment performed under Requirement R1." This provision is designed to provide the TO the flexibility to work with the verifying entity throughout (i.e., concurrent with) the risk assessment, which for some TOs may be more efficient and effective. In other words, a TO could collaborate with their unaffiliated verifying entity to perform the risk assessment under Requirement R1 such that both Requirement R1 and

Requirement R2 are satisfied concurrently. The intent of Requirement R2 is to have an entity other than the owner or operator of the facility to be involved in the risk assessment process and have an opportunity to provide input. Accordingly, Requirement R2 is designed to allow entities the discretion to have a two-step process, where the TO performs the risk assessment and subsequently has a third party review that assessment, or a one-step process, where the entity collaborates with a third party to perform the risk assessment.

Characteristics to consider in selecting a third party reviewer could include:

- Registered Entity with applicable planning and reliability functions.
- Experience in power system studies and planning.
- The entity's understanding of the MOD standards, TPL standards, and facility ratings as they pertain to planning studies.
- The entity's familiarity with the Interconnection within which the TO is located.

With respect to the requirement that TO develop and implement procedures for protecting confidential and sensitive information, the TO could have a method for identifying documents that require confidential treatment. One mechanism for protecting confidential or sensitive information is to prohibit removal of sensitive or confidential information from the TO's site. TOs could include such a prohibition in a non-disclosure agreement with the verifying entity.

A Technical feasibility study is not required in the Requirement R2 documentation of the technical basis for not modifying the identification in accordance with the recommendation.

On the issue of the difference between a verifier in Requirement R2 and a reviewer in Requirement R6, the DT indicates that the verifier will confirm that the risk assessment was completed in accordance with Requirement R1, including the number of Transmission stations and substations identified, while the reviewer in Requirement R6 is providing expertise on the manner in which the evaluation of threats was conducted in accordance with Requirement R4, and the physical security plan in accordance with Requirement R5. In the latter situation there is no verification of a technical analysis, rather an application of experience and expertise to provide guidance or recommendations, if needed.

Parts 2.4 and 6.4 require the entities to have procedures to protect the confidentiality of sensitive or confidential information. Those procedures may include the following elements:

1. Control and retention of information on site for third party verifiers/reviewers.
2. Only "need to know" employees, etc., get the information.
3. Marking documents as confidential
4. Securely storing and destroying information when no longer needed.
5. Not releasing information outside the entity without, for example, General Counsel sign-off.

Requirement R3 (This is now Requirement R7 in CIP-014-4)
Some TOPs will have obligations under this standard for certain primary control centers. Those obligations, however, are contingent upon a Transmission Owner(TO) first completing the risk assessment specified by Requirement R1 and the verification specified by Requirement R2. Requirement R3 is intended to ensure that a TOP that has operational control of a primary control center identified in Requirement R1 receive notice so that the TOP may fulfill the rest of the obligations required in Requirements R4 through R6. Since the timing obligations in Requirements R4 through R6 are based upon completion of Requirement R2, the TO must also include within the notice the date of completion of Requirement R2. Similarly, the TO must notify the TOP of any removals from identification that result from a subsequent risk assessment under Requirement R1 or as a result of the verification process under Requirement R2.

Requirement R4 (This is now Requirement R8 in CIP-014-4)
This requirement requires owners and operators of facilities identified by the Requirement R1 risk assessment and that are verified under Requirement R2 to conduct an assessment of potential threats and vulnerabilities to those Transmission stations, Transmission substations, and primary control centers using a tailored evaluation process. Threats and vulnerabilities may vary from facility to facility based on any number of factors that include, but are not limited to, location, size, function, existing physical security protections, and attractiveness as a target.

In order to effectively conduct a threat and vulnerability assessment, the asset owner may be the best source to determine specific site vulnerabilities, but current and evolving threats may best be determined by others in the intelligence or law enforcement communities. A number of resources have been identified in the standard, but many others exist and asset owners are not limited to where they may turn for assistance. Additional resources may include state or local fusion centers, U.S. Department of Homeland Security, Federal Bureau of Investigations (FBI), Public Safety Canada, Royal Canadian Mounted Police, and InfraGard chapters coordinated by the FBI.

The Responsible Entity is required to take a number of factors into account in Parts 4.1 to 4.3 in order to make a risk-based evaluation under Requirement R4.

To assist in determining the current threat for a facility, the prior history of attacks on similarly protected facilities should be considered when assessing probability and likelihood of occurrence at the facility in question.

Resources that may be useful in conducting threat and vulnerability assessments include:

- NERC Security Guideline for the Electricity Sector: Physical Security.
- NERC Security Guideline: Physical Security Response.
- ASIS International General Risk Assessment Guidelines.
- ASIS International Facilities Physical Security Measure Guideline.
- ASIS International Security Management Standard: Physical Asset Protection.

- Whole Building Design Guide - Threat/Vulnerability Assessments.

Requirement R5 (This is now Requirement R9 in CIP-014-4)
This requirement specifies development and implementation of a security plan(s) designed to protect against attacks to the facilities identified in Requirement R1 based on the assessment performed under Requirement R4.

Requirement R5 specifies the following attributes for the physical security plan:

- *Resiliency or security measures designed collectively to deter, detect, delay, assess, communicate, and respond to potential physical threats and vulnerabilities identified during the evaluation conducted in Requirement R4.*

  Resiliency may include, among other things:

  a. System topology changes,

  b. Spare equipment,

  c. Construction of a new Transmission station or Transmission substation.

  While most security measures will work together to collectively harden the entire site, some may be allocated to protect specific critical components. For example, if protection from gunfire is considered necessary, the entity may only install ballistic protection for critical components, not the entire site.

- *Law enforcement contact and coordination information.*

  Examples of such information may be posting 9-1-1 for emergency calls and providing substation safety and familiarization training for local and federal law enforcement, fire department, and Emergency Medical Services.

- *A timeline for executing the physical security enhancements and modifications specified in the physical security plan.*

  Entities have the flexibility to prioritize the implementation of the various resiliency or security enhancements and modifications in their security plan according to risk, resources, or other factors. The requirement to include a timeline in the physical security plan for executing the actual physical security enhancements and modifications does not also require that the enhancements and modifications be completed within 120 days. The actual timeline may extend beyond the 120 days, depending on the amount of work to be completed.

- *Provisions to evaluate evolving physical threats, and their corresponding security measures, to the Transmission station(s), Transmission substation(s), or primary control center(s).*

  A registered entity's physical security plan should include processes and responsibilities for obtaining and handling alerts, intelligence, and threat warnings from various sources. Some of these sources could include the ERO, E-ISAC, and US and/or Canadian federal agencies. This information should be used to reevaluate or consider changes in the security plan and corresponding security measures of the security plan found in R5.

Incremental changes made to the physical security plan prior to the next required third party review do not require additional third party reviews.

Requirement R6 (This is now Requirement R10 in CIP-014-4)
This requirement specifies review by an entity other than the TO or TOP with appropriate expertise for the evaluation performed according to Requirement R4 and the security plan(s) developed according to Requirement R5. As with Requirement R2, the term unaffiliated means that the selected third party reviewer cannot be a corporate affiliate (*i.e.,* the third party reviewer cannot be an entity that corporately controls, is controlled by or is under common control with, the TOP). A third party reviewer also cannot be a division of the TOP that operates as a functional unit.

As noted in the guidance for Requirement R2, the prohibition on registered entities using a corporate affiliate to conduct the review, however, does not prohibit a governmental entity from selecting as the third party reviewer another governmental entity within the same political subdivision. For instance, a city or municipality may use its local enforcement agency, so long as the local law enforcement agency satisfies the criteria in Requirement R6. The third party reviewer, however, must still be a third party and cannot be a division of the registered entity that operates as a functional unit.

The Responsible Entity can select from several possible entities to perform the review:

- *An entity or organization with electric industry physical security experience and whose review staff has at least one member who holds either a Certified Protection Professional or Physical Security Professional certification.*

  In selecting Certified Protection Professional and Physical Security Professional for use in this standard, the DT believed it was important that if a private entity such as a consulting or security firm was engaged to conduct the third party review, they must tangibly demonstrate competence to conduct the review. This includes electric industry physical security experience and either of the premier security industry certifications sponsored by ASIS International. The ASIS certification program was initiated in 1977, and those that hold the Certified Protection Professional certification are board certified in security management. Those that hold the Physical Security Professional certification are board certified in physical security.
- *An entity or organization approved by the ERO.*
- *A governmental agency with physical security expertise.*
- *An entity or organization with demonstrated law enforcement, government, or military physical security expertise.*

As with the verification under Requirement R2, Requirement R6 provides that the "review may occur concurrently with or after completion of the evaluation performed under Requirement R4 and the security plan development under Requirement R5." This provision is designed to provide applicable TOs and TOPs the flexibility to work with the third party reviewer throughout (*i.e.,* concurrent with) the evaluation performed according to Requirement R4 and the security plan(s) developed according to Requirement R5, which for some Responsible Entities may be more efficient and effective. In other

words, a TO or TOP could collaborate with their unaffiliated third party reviewer to perform an evaluation of potential threats and vulnerabilities (Requirement R4) and develop a security plan (Requirement R5) to satisfy Requirements R4 through R6 simultaneously. The intent of Requirement R6 is to have an entity other than the owner or operator of the facility to be involved in the Requirement R4 evaluation and the development of the Requirement R5 security plans and have an opportunity to provide input on the evaluation and the security plan. Accordingly, Requirement R6 is designed to allow entities the discretion to have a two-step process, where the TO performs the evaluation and develops the security plan itself and then has a third party review that assessment, or a one-step process, where the entity collaborates with a third party to perform the evaluation and develop the security plan.

Rationale for Attachment 1

The drafting team moved the applicability language from CIP-014-3 to Attachment 1 to make the standard easier to read.

The purpose of Reliability Standard CIP-014 is to protect Transmission stations and Transmission substations, and their associated primary control centers that if rendered inoperable or damaged as a result of a physical attack could result in instability, uncontrolled separation, or Cascading within an Interconnection. To properly include those entities that own or operate such Facilities, the Reliability Standard CIP-014 first applies to TOs that own Transmission Facilities that meet the specific criteria in Applicability Section 4.1.1.1 through 4.1.1.4. The Facilities described in Applicability Section 4.1.1.1 through 4.1.1.4 mirror those Transmission Facilities that meet the bright line criteria for "Medium Impact" Transmission Facilities under Attachment 1 of Reliability Standard CIP-002-5.1a. Each TO that owns Transmission Facilities that meet the criteria in Section 4.1.1.1 through 4.1.1.4 is required to perform a risk assessment as specified in Requirement R1 to identify its Transmission stations and Transmission substations, and their associated primary control centers, that if rendered inoperable or damaged as a result of a physical attack could result in instability, uncontrolled separation, or Cascading within an Interconnection. The DT expects this population will be small and that many TOs that meet the applicability of this standard will not actually identify any such Facilities. Only those TOs with Transmission stations or Transmission substations identified in the risk assessment (and verified under Requirement R2) have performance obligations under Requirements R3 through R6.

This standard also applies to TOPs. A TOP's obligations under the standard, however, are only triggered if the TOP is notified by an applicable TO under Requirement R3 that the TOP operates a primary control center that operationally controls a Transmission station(s) or Transmission substation(s) identified in the Requirement R1 risk assessment. A primary control center operationally controls a Transmission station or Transmission substation when the control center's electronic actions can cause direct physical action at the identified Transmission station or Transmission substation, such as opening a breaker, as opposed to a control center that only has information from the Transmission station or Transmission substation and must coordinate direct action through another entity. Only TOPs who are notified that they have primary control centers under this standard have performance obligations under Requirements R4 through R6. In other words, primary control center for purposes of this Standard is the control center that the TO or TOP, respectively, uses as its primary, permanently-manned site to physically operate a Transmission station or Transmission substation that is identified in Requirement R1 and verified in Requirement R2. Control

centers that provide back-up capability are not applicable, as they are a form of resiliency and intentionally redundant.

The DT considered several options for bright line criteria that could be used to determine applicability and provide an initial threshold that defines the set of Transmission stations and Transmission substations that would meet the directives of the FERC order on physical security (*i.e.*, those that could cause instability, uncontrolled separation, or Cascading within an Interconnection). The DT determined that using the criteria for Medium Impact Transmission Facilities in Attachment 1 of CIP-002-5.1a would provide a conservative threshold for defining which Transmission stations and Transmission substations must be included in the risk assessment in Requirement R1 of CIP-014. Additionally, the DT concluded that using the CIP-002-5.1a Medium Impact criteria was appropriate because it has been approved by stakeholders, NERC, and FERC, and its use provides a technically sound basis to determine which TOs should conduct the risk assessment. As described in CIP-002-5.1a, the failure of a Transmission station or Transmission substation that meets the Medium Impact criteria could have the capability to result in exceeding one or more Interconnection Reliability Operating Limits (IROLs). The DT understands that using this bright line criteria to determine applicability may require some TOs to perform risk assessments under Requirement R1 that will result in a finding that none of their Transmission stations or Transmission substations would pose a risk of instability, uncontrolled separation, or Cascading within an Interconnection. However, the DT determined that higher bright lines could not be technically justified to ensure inclusion of all Transmission stations and Transmission substations, and their associated primary control centers that, if rendered inoperable or damaged as a result of a physical attack could result in instability, uncontrolled separation, or Cascading within an Interconnection. Further guidance and technical basis for the bright line criteria for Medium Impact Facilities can be found in the Guidelines and Technical Basis section of CIP-002-5.1a.

Additionally, the DT determined that it was not necessary to include Generator Operators and Generator Owners in the Reliability Standard. First, Transmission stations or Transmission substations interconnecting generation facilities are considered when determining applicability. TOs will consider those Transmission stations and Transmission substations that include a Transmission station on the high side of the Generator Step-up transformer using Applicability Section 4.1.1.1 and 4.1.1.2. As an example, a Transmission station or Transmission substation identified as a TO facility that interconnects generation will be subject to the Requirement R1 risk assessment if it operates at 500kV or greater or if it is connected at 200 kV – 499kV to three or more other Transmission stations or Transmission substations and has an "aggregate weighted value" exceeding 3,000 according to the table in Applicability Section 4.1.1.2. Second, the Transmission analysis or analyses conducted under Requirement R1 should take into account the impact of the loss of generation connected to applicable Transmission stations or Transmission substations. Additionally, the FERC order does not explicitly mention generation assets and is reasonably understood to focus on the most critical Transmission Facilities. The diagram below shows an example of a station.

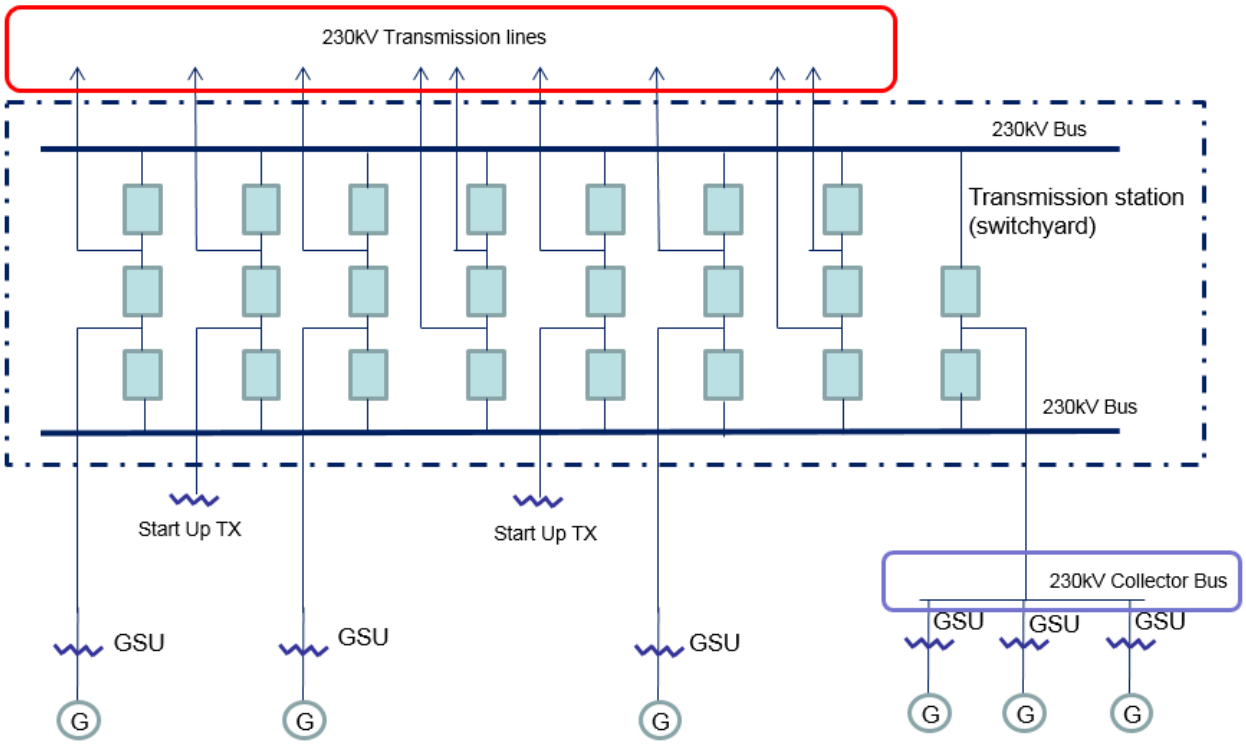

Also, the DT uses the phrase "Transmission stations or Transmission substations" to recognize the existence of both stations and substations. Many entities in industry consider a substation to be a location with physical borders (i.e., fence, wall, etc.) that contains at least an autotransformer. Locations also exist that do not contain autotransformers, and many entities in industry refer to those locations as stations (switching stations or switchyards). Therefore, the DT chose to use both "station" and "substation" to refer to the locations where groups of Transmission Facilities exist.

On the issue of joint ownership, the DT recognizes that this issue is not unique to CIP-014, and expects that the applicable TOs and TOPs will develop memorandums of understanding, agreements, Coordinated Functional Registrations, or procedures, etc., to designate responsibilities under CIP-014 when joint ownership is at issue, which is similar to what many entities have completed for other Reliability Standards.

The language contained in the applicability section regarding the collector bus is directly copied from CIP-002-5.1a, Attachment 1, and has no additional meaning within the CIP-014 standard.

Timeline

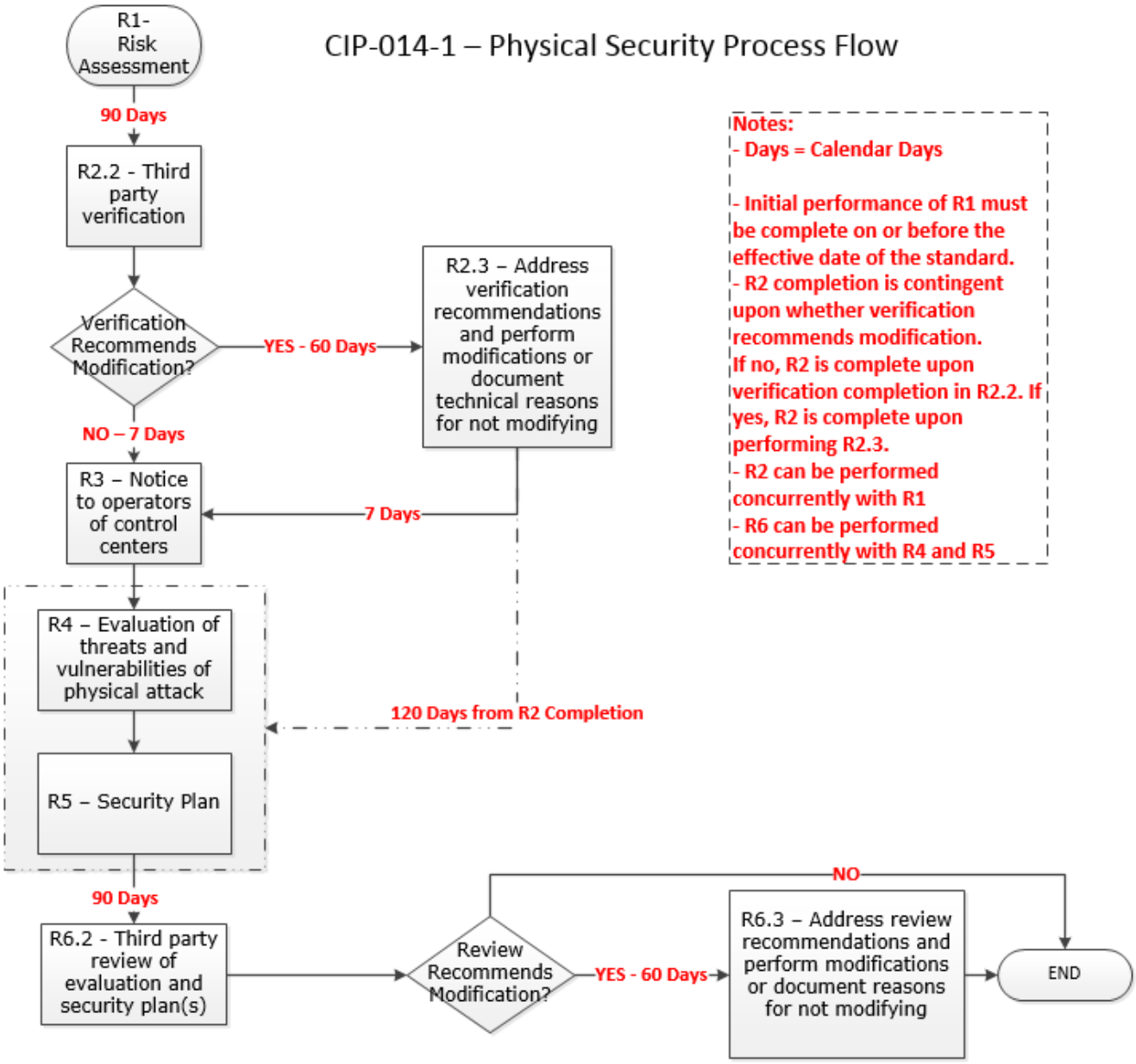
CIP-014-1 – Physical Security Process Flow
R1- Risk Assessment
90 Days
R2.2 - Third party verification
Verification Recommends Modification?
YES - 60 Days
R2.3 – Address verification recommendations and perform modifications or document technical reasons for not modifying
NO – 7 Days
R3 – Notice to operators of control centers
7 Days
R4 – Evaluation of threats and vulnerabilities of physical attack
120 Days from R2 Completion
R5 – Security Plan
90 Days
R6.2 - Third party review of evaluation and security plan(s)
Review Recommends Modification?
YES - 60 Days
NO
R6.3 – Address review recommendations and perform modifications or document reasons for not modifying
END
Notes:
- Days = Calendar Days
- Initial performance of R1 must be complete on or before the effective date of the standard.
- R2 completion is contingent upon whether verification recommends modification. If no, R2 is complete upon verification completion in R2.2. If yes, R2 is complete upon performing R2.3.
- R2 can be performed concurrently with R1
- R6 can be performed concurrently with R4 and R5

Rationale

During development of this standard, text boxes were embedded within the standard to explain the rationale for various parts of the standard. Upon Board of Trustees approval, the text from the rationale text boxes was moved to this section.

Rationale for Requirement R1 (This is for the old Requirement R1 in CIP-014-3):
This requirement meets the FERC directive from paragraph 6 of its March 7, 2014 order on physical security to perform a risk assessment to identify which facilities if rendered inoperable or damaged could impact an Interconnection through instability, uncontrolled separation, or cascading failures. The requirement is not intended to bring within the scope of the standard a Transmission station or Transmission substation unless the applicable TO determines through technical studies and analyses based on objective analysis, technical expertise, operating experience and experienced judgment that the loss of such facility would have a critical impact on the operation of the Interconnection in the event the asset is rendered inoperable or damaged. In the November 20, 2014 Order, FERC reiterated that "only an instability that has a "critical impact on the operation of the interconnection" warrants finding that the facility causing the instability is critical under Requirement R1." The TO may determine the criteria for critical impact by considering, among other criteria, any of the following:

- Criteria or methodology used by Transmission Planners or Planning Coordinators in TPL-001-4, Requirement R6
- NERC EOP-004-4 reporting criteria
- Area or magnitude of potential impact

Requirement R1 also meets the FERC directive for periodic reevaluation of the risk assessment by requiring the risk assessment to be performed every 30 months (or 60 months for an entity that has not identified in a previous risk assessment any Transmission stations or Transmission substations that if rendered inoperable or damaged could result in instability, uncontrolled separation, or Cascading within an Interconnection).

After identifying each Transmission station and Transmission substation that meets the criteria in Requirement R1, it is important to additionally identify the primary control center that operationally controls that Transmission station or Transmission substation (i.e., the control center whose electronic actions can cause direct physical actions at the identified Transmission station and Transmission substation, such as opening a breaker, compared to a control center that only has the ability to monitor the Transmission station and Transmission substation and, therefore, must coordinate direct physical action through another entity).

Rationale for Requirement R2 (This is now Requirement R6 in CIP-014-4):
This requirement meets the FERC directive from paragraph 11 in the order on physical security requiring verification by an entity other than the owner or operator of the risk assessment performed under Requirement R1.

This requirement provides the flexibility for a TO to select registered and non-registered entities with transmission planning or analysis experience to perform the verification of the Requirement R1 risk assessment. The term "unaffiliated" means that the selected verifying entity cannot be a corporate affiliate (i.e., the verifying entity cannot be an entity that controls, is controlled by, or is under common control with, the TO). The verifying entity also cannot be a division of the TO that operates as a functional unit. The term "unaffiliated" is not intended to prohibit a governmental entity from using another government entity to be a verifier under Requirement R2.

Requirement R2 also provides the TO the flexibility to work with the verifying entity throughout the Requirement R1 risk assessment, which for some TO may be more efficient and effective. In other words, a TO could coordinate with their unaffiliated verifying entity to perform a Requirement R1 risk assessment to satisfy both Requirement R1 and Requirement R2 concurrently.

Planning Coordinator is a functional entity listed in Part 2.1. The Planning Coordinator and Planning Authority are the same entity as shown in the NERC Glossary of Terms Used in NERC Reliability Standards.

Rationale for Requirement R3 (This is now Requirement R7 in CIP-014-4):
Some TOPs will have obligations under this standard for certain primary control centers. Those obligations, however, are contingent upon a TO first identifying which Transmission stations and Transmission substations meet the criteria specified by Requirement R1, as verified according to Requirement R2. This requirement is intended to ensure that a TOP that has operational control of a primary control center identified in Requirement R1, Part 1.2 of a Transmission station or Transmission substation verified according to Requirement R2 receives notice of such identification so that the TOP may timely fulfill its resulting obligations under Requirements R4 through R6. Since the timing obligations in Requirements R4 through R6 are based upon completion of Requirement R2, the TO must also include notice of the date of completion of Requirement R2. Similarly, the TO must notify the TOP of any removals from identification that result from a subsequent risk assessment under Requirement R1 or the verification process under Requirement R2.

Rationale for Requirement R4 (This is now Requirement R8 in CIP-014-4):
This requirement meets the FERC directive from paragraph 8 in the order on physical security that the reliability standard must require tailored evaluation of potential threats and vulnerabilities to facilities identified in Requirement R1 and verified according to Requirement R2. Threats and vulnerabilities may vary from facility to facility based on factors such as the facility's location, size, function, existing protections, and attractiveness of the target. As such, the requirement does not mandate a one-size-fits-all approach but requires entities to account for the unique characteristics of their facilities.

Requirement R4 does not explicitly state when the evaluation of threats and vulnerabilities must occur or be completed. However, Requirement R5 requires that the entity's security plan(s), which is dependent on the Requirement R4 evaluation, must be completed within 120 calendar days following completion of Requirement R2. Thus, an entity has the flexibility when to complete the Requirement R4 evaluation, provided that it is completed in time to comply with the requirement in Requirement R5 to develop a physical security plan 120 calendar days following completion of Requirement R2.

Rationale for Requirement R5 (This is now Requirement R9 in CIP-014-4):
This requirement meets the FERC directive from paragraph 9 in the order on physical security requiring the development and implementation of a security plan(s) designed to protect against attacks to the facilities identified in Requirement R1 based on the assessment performed under Requirement R4.

Rationale for Requirement R6 (This is now Requirement R10 in CIP-014-4):
This requirement meets the FERC directive from paragraph 11 in the order on physical security requiring review by an entity other than the owner or operator with appropriate expertise of the evaluation performed according to Requirement R4 and the security plan(s) developed according to Requirement R5.

As with the verification required by Requirement R2, Requirement R6 provides TOs and TOPs the flexibility to work with the third party reviewer throughout the Requirement R4 evaluation and the development of the Requirement R5 security plan(s). This would allow entities to satisfy their obligations under Requirement R6 concurrent with the satisfaction of their obligations under Requirements R4 and R5.

NERC
NORTH AMERICAN ELECTRIC RELIABILITY CORPORATION

Technical Rationale

Project 2023-06 CIP-014 Risk Assessment Refinement
Reliability Standard CIP-014-4 | ~~March~~ May 2026

CIP-014-4 – Physical Security

In performing the risk assessment, the Transmission Owner (TO) should first identify their population of Transmission stations and Transmission substations that meet the criteria contained in Attachment 1. The Standard requires the TO to perform a risk assessment, consisting of transmission analyses to determine which of those Transmission stations and Transmission substations, if rendered inoperable or damaged, could result in instability, uncontrolled separation, or Cascading within an Interconnection.

The purpose of Reliability Standard CIP-014 is to protect Transmission stations and Transmission substations, and their associated primary control centers, that if rendered inoperable or damaged, due to a physical attack, could cause instability, uncontrolled separation, or Cascading within an Interconnection. To properly identify candidates for such Transmission station(s) and Transmission substation(s), the TO shall evaluate the criteria listed in Attachment 1.

Rationale for Requirement R1

The Standard Authorization Request (SAR) directed the drafting team (DT) to clarify the in-service window. It also directed the DT to correct any discrepancies between the study period, frequency of study, and the base case(s) a TO uses. In the previous version of CIP-014, the 30-month time frame and the 24-month planned-to-be-in-service date could, if not carefully applied, lead to gaps between models and study horizons. Per the SAR, CIP-014-4 has consolidated these multiple timelines into one.

Requirement R1 is revised to ensure that each TO establishes a list of applicable Transmission station(s) or Transmission substation(s) in accordance with Attachment 1. Aligning the 36 calendar months look ahead in Requirement R1 with the 36 calendar months risk assessment cycle ensures that system topology of the cases used to assess applicability is consistent with the system topology in the risk assessment models.

TOs shall review and, if necessary, update the list of applicable Transmission station(s) or Transmission substation(s) per Attachment 1 at least once every 36 calendar months. The list of applicable Transmission station(s) or Transmission substation(s) shall include existing Facilities and Transmission station(s) and Transmission substation(s) planned to be in service within 36 calendar months. The 36 calendar months risk assessment study cycle aligns with the 36 calendar months planned-to-be-in-service date. "Planned to be in-service" should be taken to mean all Transmission station(s) and Transmission substation(s) as modeled in the base cases ~~for the Near-Term Transmission Planning Horizon~~.

Rationale for Requirement R2

The distance chosen in ~~r~~Requirement R2 is based on guidelines that considered a variety of plausible attack scenarios capable of rendering a substation inoperable.

The DT chose 1,500 feet or 457 meters (the shortest distance, measured substation fence line to substation fence line) in Requirement R2 after review of the Department of Homeland Security (DHS)-Department of Justice (DOJ) Bomb Threat Stand-Off Card. The Bomb Threat Stand-Off Card is a quick reference guide providing recommended evacuation and shelter-in-place distances for various types and sizes of Improvised Explosive Devices (IED), based on version of August~~,~~ 2025.[1]

The guidance above allowed the DT to draft language that clarified what study scenario(s) and other study assumptions are appropriate and reasonable considering the intent of CIP-014 and the potential range of issues during a physical attack. Simulations should incorporate the loss of station elements without the reliance on local system protection. Clarifying how to account for adjacent Transmission stations or Transmission substations of differing ownership as well as for those Transmission stations or Transmission substations within line-of-sight to each other. These provide limits to what the TO must study and avoid including an explicit representation of the physical event in the standard.

Accurate simulation of the event was deemed a priority of the DT. The DT felt that ownership of proximate substations, as identified in Requirement R2, was irrelevant to Bulk Electric System impact.

The Transmission station(s) or Transmission substation(s) identified in Requirement R2 are only intended for use in the Requirement R5 risk assessment and the Requirement R6 third-party verification to properly account for additional equipment that, if also damaged during an event, could lead to loss of additional Facilities. They are not intended to be subject to Requirements R7 through R10. Requirements R7 through R10 are only relevant for the Transmission ~~sub~~station(s) or Transmission substation(s) identified in Requirement R1.

Rationale for Requirement R3
The new Requirement R3 fulfills the first item in the SAR to "clarify the risk assessment methods" and that the "methods should account for dynamic studies." Requirement R3 also fulfills other items in the SAR around case selection, technically supported rationales, the loss of communications, and local protection within the affected station. The previous Requirement R3 is now Requirement R7 of CIP-014-4.

Per Requirement R3, each TO is required to have a risk assessment methodology, including the criteria by which analytical results will be examined to identify Transmission station(s) or Transmission substation(s) that if rendered inoperable or damaged as a result of a physical attack could result in instability, uncontrolled separation, or Cascading within an Interconnection. The TO is not required to develop its own methodology and is free to use a methodology developed elsewhere, such as in coordination with neighboring TOs or Independent System Operators (ISOs).

Rationale for Requirement R3, Part 3.1
TOs should determine the amount of unacceptable load loss and generation loss within an Interconnection when determining the impact of an event to the Transmission system. The thresholds

[1] https://www.cisa.gov/resources-tools/resources/dhs-doj-bomb-threat-stand-card

identifying unacceptable generation and load losses should be the total of the losses within the TO's footprint and losses external to the TO's footprint. Criteria for measures such as load loss or generation loss should consider the impact to the Interconnection.

While the use of Recommended Interconnection Resource Loss Protection Criteria (RLPC) provides one approach to generation loss—setting these thresholds based on the two largest potential resource losses in an Interconnection as detailed in Attachment A of NERC Reliability Standard BAL-003-2—other methods may also be appropriate, as determined by the TO. The RLPC values should be taken from the latest approved version of NERC's annual 'Frequency Response Annual Analysis' report.

Use of the RLPC recommendations in accordance with the latest version of NERC's 'Frequency Response Annual Analysis' report is an example of technically justified thresholds for unacceptable generation and load loss within an Interconnection. Use of lower values than the RLPC recommendations is also technically justifiable. Use of higher values than the RLPC recommendations would require additional technical justification.

Large loss of generation or load due to the evaluated disturbance could result in severe System impacts. The documented risk assessment methodology shall include the amount of unacceptable load loss and generation loss, that could result in instability, uncontrolled separation, or Cascading within an Interconnection. Conditions and thresholds used for determining critical Transmission station(s) or Transmission substation(s), i.e., those that if rendered inoperable or damaged as a result of a physical attack could result in instability, uncontrolled separation, or Cascading within an Interconnection, should be part of the documented risk assessment methodology.

It is up to the TO to identify post-event measures that can be used to assess the criticality of a Transmission station or Transmission substation. Suggested measures are listed below. A TO can decide that one or more of the items are not applicable to their location within the interconnection and if any additional items should be included.

The following parameters can be used to evaluate the steady-state and/or dynamic analysis:

- Steady state voltages
- Transient voltage response
- Thermal loading of Facilities
- Relay loadability
- Rotor angle stability
- Frequency exceeding generator limits
- Frequency stability
- Acceptable damping of oscillations
- Cascading line tripping

- Steady-state voltage stability

Rationale for Requirement R3, Part 3.2
The performance of both steady state and dynamics simulations is required for all applicable Transmission station(s) and substation(s). Dynamic simulations are required by the standard because exclusively performing steady-state simulations is insufficient for determining whether the loss of a Transmission station or Transmission substation could result in instability, uncontrolled separation, or Cascading within an Interconnection.

Rationale for Requirement R3, Part 3.3
Historically, simulation of a three-phase Fault at applicable Transmission station(s) and Transmission substation(s) appears to be the prevalent assumption used by the majority of TOs in the performance of stability analyses for CIP-014 risk assessments. The DT has determined, however, that there may be specific locations or scenarios that merit the use of a different Fault type (or a sequence or progression of multiple Faults) more consistent with the occurrence of a physical attack for those locations or scenarios.

Rationale for Requirement R3, Part 3.3.1
The applicable Transmission substation or Transmission station is the station that is assumed to be under attack for the purposes of this standard. Any damage to Transmission sStations or Transmission sSubstations in proximity is assumed to be collateral damage. The intent of CIP-014 is to cover the case when the applicable Transmission sStation or Transmission sSubstation becomes inoperable. The SAR refers to the "total loss of communication and protection equipment at the substation." Requirement R3, Part 3.3.1 uses the "prior loss" wording to eliminate difficulties when performing simulations. When exploring possible attack scenarios, it is possible to develop scenarios that allow a fault prior to the loss of communication and protection systems. Protection systems typically operate within a few cycles, so a short delay between the fault and the loss of the protection system could allow breakers to operate. "Prior loss of communication and Protection Systems" eliminates this possibility, so the fault should be studied without the availability of local communications or Protection Systems. The use of delayed clearing times, typically Zone 2, is necessary because the applicable substation has lost local protection and all communications with other substations.

Rationale for Requirement R3, Part 3.3.2
The relative locations of the applicable Transmission SStation or Transmission sSubstation and the neighboring substation will determine the best way to evaluate and study the combinations of substations. Every substation identified in Requirement R2 must be studied in at least one combination with its applicable Transmission sStation or Transmission sSubstation. For example, if there is a single neighboring substation near the applicable substation, then the applicable and neighboring substation should be studied together. If there are two or more neighboring substations that are close together and both within 1,500 feet of the applicable substation, then the responsible entity may study the applicable substation with the combination of the two neighbors. If there are two or more neighboring substations on different sides of the applicable substation, then it can make more sense to study the applicable substation with each proximity substation individually. For purposes of the simulations, the faults should be applied at the same time or after the faults applied to the applicable Transmission sStation or

Transmission sSubstation depending on the simulated event and any restrictions of the simulation software. Not all software packages allow for multiple simultaneous faults. The protection and communication systems at the proximate substations are expected to operate normally, so delayed clearing is not necessary.

Rationale for Requirement R3, Part 3.3.3
The DT believes that requiring documented justification for Faults being selected, without specifying Fault type, allows TOs to determine on a location-by-location basis what is a credible high-severity scenario for a physical attack and furthermore how to appropriately model the associated stability simulations. The DT also believes that a single justification may be used for multiple locations. Requirement 3 Part 3.3.3 allows the TOs to determine the type of fault with documented justification. If a fault type and justification is relevant to multiple Transmission sStations or Transmission sSubstations, there is no need to repeatedly document the same justification.

Rationale for Requirement R3, Part 3.3.4
Each simulation should include the removal of all Elements that Protection Systems and other controls are expected to automatically disconnect for the event. After the prior loss of communication and Protection Systems at the applicable Transmission station or Transmission substation, other Protection Systems should operate as expected for the event considered. The accurate simulation of Protection System actions is essential for correctly identifying the risk of instability, uncontrolled separation, or Cascading within an Interconnection.

Rationale for Requirement R3, Part 3.3.5
While there are commonly used generic clearing times for remote clearing that are consistent across the industry, actual clearing times can be shorter or longer depending on conditions and design considerations at an individual TO. The difference of a few cycles can have a significant impact on the transient behavior of generating units, therefore, it is required that the risk analysis use actual or more conservative clearing times.

Rationale for Requirement R4
Joint ownership of Transmission substations and Transmission stations was discussed in the Guidelines and Technical Basis of previous versions of the CIP-014-3 standard, but because ownership was not addressed in the standard language, the CIP-014-4 Risk Assessment Refinement SAR required clarification which resulted in the new requirement R4. TOs that have applicable jointly owned Transmission substations and Transmission stations should coordinate and document their individual and joint responsibilities for CIP-014-4 Requirements R3 and R5. TOs should be able to demonstrate sole or joint ownership through one-line diagrams with ownership demarcations and/or a letter of attestation stating which stations are solely or jointly owned.

Rationale for Requirement R5
An objective of the CIP-014-3 Risk Assessment Refinement SAR was to align study periods, frequency of studies, and the powerflow models used for the studies. A 36-month periodicity was chosen for the Requirement R5 risk assessment to reduce the periodicity options from previous versions of the standard.

Additionally, a single study periodicity is more easily aligned with project in-service date considerations and model choices. As called for in Project Scope item 3 of the CIP-014-3 Risk Assessment Refinement SAR, the risk assessment must comply with the methodology developed in Requirement R3, so this language was explicitly added to Requirement R5.

TOs shall review and, if necessary, update the list of applicable Transmission station(s) or Transmission substation(s) per Attachment 1 at least once every 36 months. The list of applicable Transmission station(s) and Transmission substation(s) shall include existing or planned to be in service within 36 months Transmission station(s) and Transmission substation(s). The 36-month cycle for updating the list of applicable Transmission station(s) or Transmission substation(s) per Attachment 1 aligns with the annual cycle for performing Planning Assessments per NERC Standard TPL-001. The 36-month risk assessment study cycle aligns with the 36-month planned-to-be-in-service date.

In addition to the performance of the risk assessment using Transmission station(s) and Transmission substation(s) identified in Requirement R1, any proximate Transmission station(s) and Transmission substation(s) identified in Requirement R2 should also be included in the risk assessment. Furthermore, any Transmission station(s) and Transmission substation(s) assessed due to having been identified per Requirement R1 should also be run as part of a proximate Transmission station(s) and Transmission substation(s) group per Requirement R2 if such an identification is made.

Rationale for Requirement R5, Part 5.1
If a TO performs a steady state analysis and identifies a Transmission station or substation that, if rendered inoperable or damaged, could result in instability, uncontrolled separation, or Cascading within an Interconnection, then dynamic analysis is not required for that Transmission station or substation. If a TO performs a dynamic analysis and identifies a Transmission station or substation that, if rendered inoperable or damaged, could result in instability, uncontrolled separation, or Cascading within an Interconnection, then steady state analysis is not required for that Transmission station or substation.

Rationale for Requirement R5, Part 5.2
The intent of this Requirement is that TOs do not have to reassess already identified and protected Transmission stations or substations (Requirement R5 Part 5.3 and Requirements R7 through R10 still apply to those Transmission stations or substations). A new risk assessment will need to be performed if the TO wishes to determine whether or not a Transmission station or substation can be removed from identification and protection as outlined in Requirement R7 Part 7.1.

Rationale for Requirement R5, Part 5.3
Identification of Primary Control Centers: After completing the risk assessment under Requirement R5 and verified under Requirement R6, it is important to additionally identify the primary control center that operationally controls each Transmission station or Transmission substation, that if rendered inoperable or damaged could result in instability, uncontrolled separation, or Cascading within an Interconnection. A primary control center “operationally controls” a Transmission station or Transmission substation when the control center’s electronic actions can cause direct physical actions at the identified Transmission station and Transmission substation, such as opening a breaker.

Rationale for Implementation Plan

In developing the Implementation Plan, the DT has determined that 24 calendar months for the CIP-014-4 implementation plan would allow adequate time for TOs and Transmission Operators (TOPs) to determine applicability, develop criteria, write or revise methodologies, perform assessments, and procure unaffiliated third parties for risk assessment verification (which some TOs have performed concurrently with their risk assessment analyses.

Furthermore, given a) FERC's sense of urgency stated in their December 2022 order,[2] which directed NERC to evaluate the effectiveness of CIP-014-3 in mitigating the risks to the bulk power system associated with physical attacks~~original Order to revise CIP-014 (Docket No. RD23-2-000, issued December 15, 2022)~~, b) the findings of NERC's report to FERC on April 14, 2023 (Evaluation of the Physical Security Reliability Standard and Physical Security Attacks to the Bulk-Power System)[3], and c) the designation of Project 2023-06 as High Priority, the DT has determined that an Implementation Plan schedule of greater than 24 calendar months would not be responsive to the risks identified~~FERC's concerns~~ with sufficient urgency, and thus 24 calendar months is an appropriate timeframe. While the DT understands the time and resources required of entities to respond to this Implementation Plan, the DT believes that 24 calendar months properly balances the need to address the reliability risk and the time needed by entities to determine applicability, develop criteria, write or revise methodologies, perform assessments, and procure unaffiliated third parties for risk assessment verification.

CIP-014-4 Flowchart

The flowchart is a concise outline that guides through the steps for completing the risk assessment at least once every 36 calendar months, based on the Applicability in Attachment 1 and Requirements R1-R5.

[2] *N. Am. Elec. Reliability Corp.*, 181 FERC ¶ 61,230 (2022).
[3] *See* NERC Report on CIP-014-3.pdf, filed with FERC on April 14, 2023).

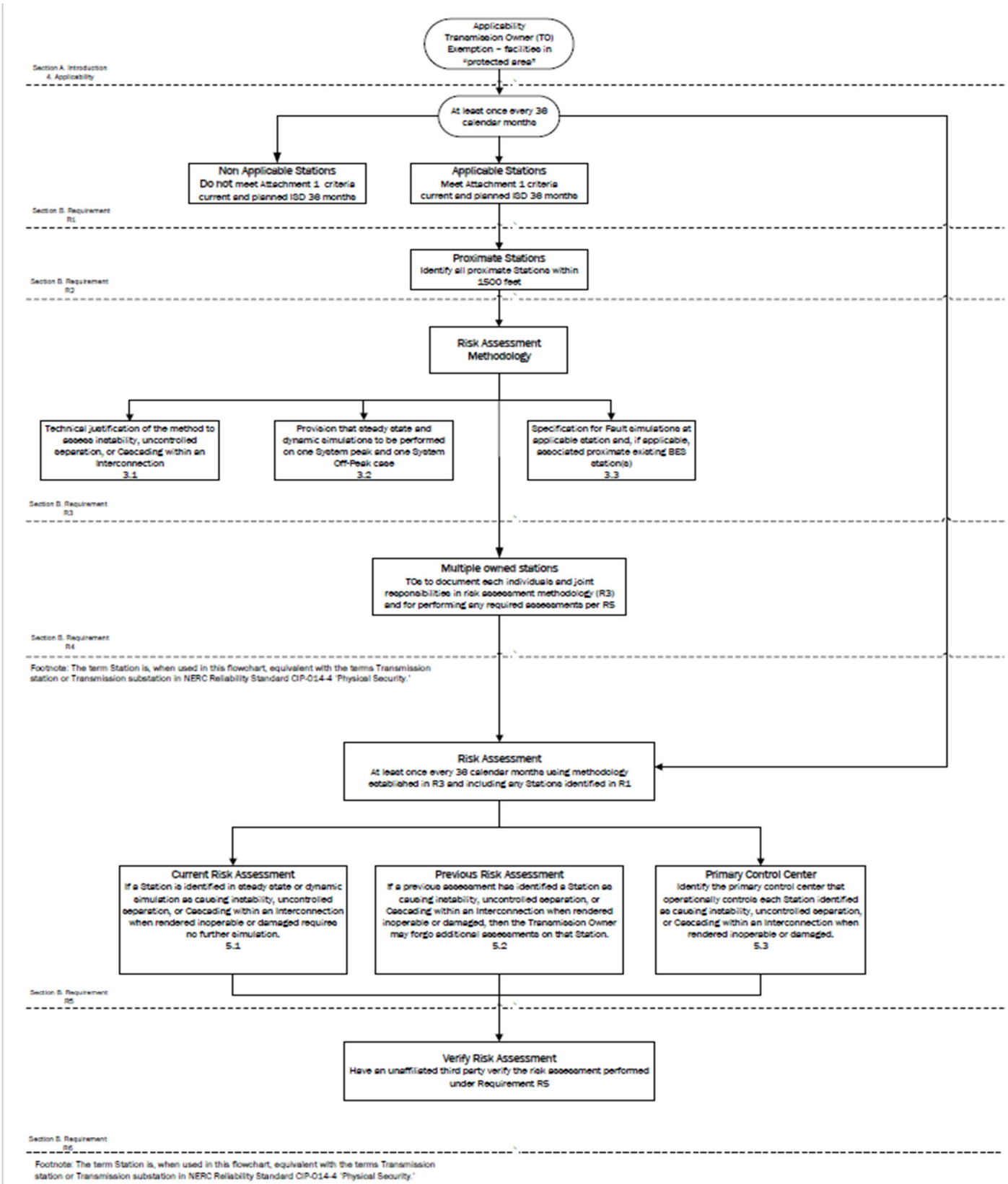
Applicability
Transmission Owner (TO) Exemption – facilities in "protected area"
Section A. Introduction 4. Applicability
At least once every 36 calendar months
Non Applicable Stations
Do not meet Attachment 1 criteria current and planned ISD 36 months
Applicable Stations
Meet Attachment 1 criteria current and planned ISD 36 months
Section B. Requirement R1
Proximate Stations
Identify all proximate Stations within 1500 feet
Section B. Requirement R2
Risk Assessment Methodology
Technical justification of the method to assess instability, uncontrolled separation, or Cascading within an Interconnection 3.1
Provision that steady state and dynamic simulations to be performed on one System peak and one System Off-Peak case 3.2
Specification for Fault simulations at applicable station and, if applicable, associated proximate existing BES station(s) 3.3
Section B. Requirement R3
Multiple owned stations
TOs to document each individuals and joint responsibilities in risk assessment methodology (R3) and for performing any required assessments per R5
Section B. Requirement R4
Footnote: The term Station is, when used in this flowchart, equivalent with the terms Transmission station or Transmission substation in NERC Reliability Standard CIP-014-4 'Physical Security.'
Risk Assessment
At least once every 36 calendar months using methodology established in R3 and including any Stations identified in R1
Current Risk Assessment
If a Station is identified in steady state or dynamic simulation as causing instability, uncontrolled separation, or Cascading within an Interconnection when rendered inoperable or damaged requires no further simulation. 5.1
Previous Risk Assessment
If a previous assessment has identified a Station as causing instability, uncontrolled separation, or Cascading within an Interconnection when rendered inoperable or damaged, then the Transmission Owner may forgo additional assessments on that Station. 5.2
Primary Control Center
Identify the primary control center that operationally controls each Station identified as causing instability, uncontrolled separation, or Cascading within an Interconnection when rendered inoperable or damaged. 5.3
Section B. Requirement R5
Verify Risk Assessment
Have an unaffiliated third party verify the risk assessment performed under Requirement R5
Section B. Requirement R6
Footnote: The term Station is, when used in this flowchart, equivalent with the terms Transmission station or Transmission substation in NERC Reliability Standard CIP-014-4 'Physical Security.'

Technical Rationale for Reliability Standard CIP-014-3

This section contains a "cut and paste" of the former Guidelines and Technical Basis (GTB) as-is of from CIP-014-3 standard to preserve any historical references. No modifications have been made.

Requirement R2 (This is Requirement R6 in CIP-014-4)
This requirement specifies verification of the risk assessment performed under Requirement R1 by an entity other than the owner or operator of the Requirement R1 risk assessment.

A verification of the risk assessment by an unaffiliated third party, as specified in Requirement R2, could consist of:

1. Certifying that the Requirement R1 risk assessment considers the Transmission stations and Transmission substations identified in Applicability Section 4.1.1.
2. Review of the model used to conduct the risk assessment to ensure it contains sufficient system topology to identify Transmission stations and Transmission substations that if rendered inoperable or damaged could cause instability, uncontrolled separation, or Cascading within an Interconnection.
3. Review of the Requirement R1 risk assessment methodology.

This requirement provides the flexibility for a TO to select from unaffiliated registered and non-registered entities with transmission planning or analysis experience to perform the verification of the Requirement R1 risk assessment. The term unaffiliated means that the selected verifying entity cannot be a corporate affiliate (i.e., the verifying or third party reviewer cannot be an entity that corporately controls, is controlled by, or is under common control with the TO). The verifying entity also cannot be a division of the TO that operates as a functional unit.

The prohibition on registered entities using a corporate affiliate to conduct the verification, however, does not prohibit a governmental entity (e.g., a city, a municipality, a U.S. federal power marketing agency, or any other political subdivision of U.S. or Canadian federal, state, or provincial governments) from selecting as the verifying entity another governmental entity within the same political subdivision. For instance, a U.S. federal power marketing agency may select as its verifier another U.S. federal agency to conduct its verification so long as the selected entity has transmission planning or analysis experience. Similarly, a TO owned by a Canadian province can use a separate agency of that province to perform the verification. The verifying entity, however, must still be a third party and cannot be a division of the registered entity that operates as a functional unit.

Requirement R2 also provides that the "verification may occur concurrent with or after the risk assessment performed under Requirement R1." This provision is designed to provide the TO the flexibility to work with the verifying entity throughout (i.e., concurrent with) the risk assessment, which for some TOs may be more efficient and effective. In other words, a TO could collaborate with their unaffiliated verifying entity to perform the risk assessment under Requirement R1 such that both Requirement R1 and

Requirement R2 are satisfied concurrently. The intent of Requirement R2 is to have an entity other than the owner or operator of the facility to be involved in the risk assessment process and have an opportunity to provide input. Accordingly, Requirement R2 is designed to allow entities the discretion to have a two-step process, where the TO performs the risk assessment and subsequently has a third party review that assessment, or a one-step process, where the entity collaborates with a third party to perform the risk assessment.

Characteristics to consider in selecting a third party reviewer could include:

- Registered Entity with applicable planning and reliability functions.
- Experience in power system studies and planning.
- The entity's understanding of the MOD standards, TPL standards, and facility ratings as they pertain to planning studies.
- The entity's familiarity with the Interconnection within which the TO is located.

With respect to the requirement that TO develop and implement procedures for protecting confidential and sensitive information, the TO could have a method for identifying documents that require confidential treatment. One mechanism for protecting confidential or sensitive information is to prohibit removal of sensitive or confidential information from the TO's site. TOs could include such a prohibition in a non-disclosure agreement with the verifying entity.

A Technical feasibility study is not required in the Requirement R2 documentation of the technical basis for not modifying the identification in accordance with the recommendation.

On the issue of the difference between a verifier in Requirement R2 and a reviewer in Requirement R6, the DT indicates that the verifier will confirm that the risk assessment was completed in accordance with Requirement R1, including the number of Transmission stations and substations identified, while the reviewer in Requirement R6 is providing expertise on the manner in which the evaluation of threats was conducted in accordance with Requirement R4, and the physical security plan in accordance with Requirement R5. In the latter situation there is no verification of a technical analysis, rather an application of experience and expertise to provide guidance or recommendations, if needed.

Parts 2.4 and 6.4 require the entities to have procedures to protect the confidentiality of sensitive or confidential information. Those procedures may include the following elements:

1. Control and retention of information on site for third party verifiers/reviewers.
2. Only "need to know" employees, etc., get the information.
3. Marking documents as confidential
4. Securely storing and destroying information when no longer needed.
5. Not releasing information outside the entity without, for example, General Counsel sign-off.

Requirement R3 (This is now Requirement R7 in CIP-014-4)
Some TOPs will have obligations under this standard for certain primary control centers. Those obligations, however, are contingent upon a Transmission Owner(TO) first completing the risk assessment specified by Requirement R1 and the verification specified by Requirement R2. Requirement R3 is intended to ensure that a TOP that has operational control of a primary control center identified in Requirement R1 receive notice so that the TOP may fulfill the rest of the obligations required in Requirements R4 through R6. Since the timing obligations in Requirements R4 through R6 are based upon completion of Requirement R2, the TO must also include within the notice the date of completion of Requirement R2. Similarly, the TO must notify the TOP of any removals from identification that result from a subsequent risk assessment under Requirement R1 or as a result of the verification process under Requirement R2.

Requirement R4 (This is now Requirement R8 in CIP-014-4)
This requirement requires owners and operators of facilities identified by the Requirement R1 risk assessment and that are verified under Requirement R2 to conduct an assessment of potential threats and vulnerabilities to those Transmission stations, Transmission substations, and primary control centers using a tailored evaluation process. Threats and vulnerabilities may vary from facility to facility based on any number of factors that include, but are not limited to, location, size, function, existing physical security protections, and attractiveness as a target.

In order to effectively conduct a threat and vulnerability assessment, the asset owner may be the best source to determine specific site vulnerabilities, but current and evolving threats may best be determined by others in the intelligence or law enforcement communities. A number of resources have been identified in the standard, but many others exist and asset owners are not limited to where they may turn for assistance. Additional resources may include state or local fusion centers, U.S. Department of Homeland Security, Federal Bureau of Investigations (FBI), Public Safety Canada, Royal Canadian Mounted Police, and InfraGard chapters coordinated by the FBI.

The Responsible Entity is required to take a number of factors into account in Parts 4.1 to 4.3 in order to make a risk-based evaluation under Requirement R4.

To assist in determining the current threat for a facility, the prior history of attacks on similarly protected facilities should be considered when assessing probability and likelihood of occurrence at the facility in question.

Resources that may be useful in conducting threat and vulnerability assessments include:

- NERC Security Guideline for the Electricity Sector: Physical Security.
- NERC Security Guideline: Physical Security Response.
- ASIS International General Risk Assessment Guidelines.
- ASIS International Facilities Physical Security Measure Guideline.
- ASIS International Security Management Standard: Physical Asset Protection.

- Whole Building Design Guide - Threat/Vulnerability Assessments.

Requirement R5 (This is now Requirement R9 in CIP-014-4)
This requirement specifies development and implementation of a security plan(s) designed to protect against attacks to the facilities identified in Requirement R1 based on the assessment performed under Requirement R4.

Requirement R5 specifies the following attributes for the physical security plan:

- *Resiliency or security measures designed collectively to deter, detect, delay, assess, communicate, and respond to potential physical threats and vulnerabilities identified during the evaluation conducted in Requirement R4.*

  Resiliency may include, among other things:

  a. System topology changes,

  b. Spare equipment,

  c. Construction of a new Transmission station or Transmission substation.

  While most security measures will work together to collectively harden the entire site, some may be allocated to protect specific critical components. For example, if protection from gunfire is considered necessary, the entity may only install ballistic protection for critical components, not the entire site.

- *Law enforcement contact and coordination information.*

  Examples of such information may be posting 9-1-1 for emergency calls and providing substation safety and familiarization training for local and federal law enforcement, fire department, and Emergency Medical Services.

- *A timeline for executing the physical security enhancements and modifications specified in the physical security plan.*

  Entities have the flexibility to prioritize the implementation of the various resiliency or security enhancements and modifications in their security plan according to risk, resources, or other factors. The requirement to include a timeline in the physical security plan for executing the actual physical security enhancements and modifications does not also require that the enhancements and modifications be completed within 120 days. The actual timeline may extend beyond the 120 days, depending on the amount of work to be completed.

- *Provisions to evaluate evolving physical threats, and their corresponding security measures, to the Transmission station(s), Transmission substation(s), or primary control center(s).*

  A registered entity's physical security plan should include processes and responsibilities for obtaining and handling alerts, intelligence, and threat warnings from various sources. Some of these sources could include the ERO, E-ISAC, and US and/or Canadian federal agencies. This information should be used to reevaluate or consider changes in the security plan and corresponding security measures of the security plan found in R5.

Incremental changes made to the physical security plan prior to the next required third party review do not require additional third party reviews.

Requirement R6 (This is now Requirement R10 in CIP-014-4)
This requirement specifies review by an entity other than the TO or TOP with appropriate expertise for the evaluation performed according to Requirement R4 and the security plan(s) developed according to Requirement R5. As with Requirement R2, the term unaffiliated means that the selected third party reviewer cannot be a corporate affiliate (*i.e.,* the third party reviewer cannot be an entity that corporately controls, is controlled by or is under common control with, the TOP). A third party reviewer also cannot be a division of the TOP that operates as a functional unit.

As noted in the guidance for Requirement R2, the prohibition on registered entities using a corporate affiliate to conduct the review, however, does not prohibit a governmental entity from selecting as the third party reviewer another governmental entity within the same political subdivision. For instance, a city or municipality may use its local enforcement agency, so long as the local law enforcement agency satisfies the criteria in Requirement R6. The third party reviewer, however, must still be a third party and cannot be a division of the registered entity that operates as a functional unit.

The Responsible Entity can select from several possible entities to perform the review:

- *An entity or organization with electric industry physical security experience and whose review staff has at least one member who holds either a Certified Protection Professional or Physical Security Professional certification.*

  In selecting Certified Protection Professional and Physical Security Professional for use in this standard, the DT believed it was important that if a private entity such as a consulting or security firm was engaged to conduct the third party review, they must tangibly demonstrate competence to conduct the review. This includes electric industry physical security experience and either of the premier security industry certifications sponsored by ASIS International. The ASIS certification program was initiated in 1977, and those that hold the Certified Protection Professional certification are board certified in security management. Those that hold the Physical Security Professional certification are board certified in physical security.
- *An entity or organization approved by the ERO.*
- *A governmental agency with physical security expertise.*
- *An entity or organization with demonstrated law enforcement, government, or military physical security expertise.*

As with the verification under Requirement R2, Requirement R6 provides that the "review may occur concurrently with or after completion of the evaluation performed under Requirement R4 and the security plan development under Requirement R5." This provision is designed to provide applicable TOs and TOPs the flexibility to work with the third party reviewer throughout (*i.e.,* concurrent with) the evaluation performed according to Requirement R4 and the security plan(s) developed according to Requirement R5, which for some Responsible Entities may be more efficient and effective. In other

words, a TO or TOP could collaborate with their unaffiliated third party reviewer to perform an evaluation of potential threats and vulnerabilities (Requirement R4) and develop a security plan (Requirement R5) to satisfy Requirements R4 through R6 simultaneously. The intent of Requirement R6 is to have an entity other than the owner or operator of the facility to be involved in the Requirement R4 evaluation and the development of the Requirement R5 security plans and have an opportunity to provide input on the evaluation and the security plan. Accordingly, Requirement R6 is designed to allow entities the discretion to have a two-step process, where the TO performs the evaluation and develops the security plan itself and then has a third party review that assessment, or a one-step process, where the entity collaborates with a third party to perform the evaluation and develop the security plan.

Rationale for Attachment 1

The drafting team moved the applicability language from CIP-014-3 to Attachment 1 to make the standard easier to read.

The purpose of Reliability Standard CIP-014 is to protect Transmission stations and Transmission substations, and their associated primary control centers that if rendered inoperable or damaged as a result of a physical attack could result in instability, uncontrolled separation, or Cascading within an Interconnection. To properly include those entities that own or operate such Facilities, the Reliability Standard CIP-014 first applies to TOs that own Transmission Facilities that meet the specific criteria in Applicability Section 4.1.1.1 through 4.1.1.4. The Facilities described in Applicability Section 4.1.1.1 through 4.1.1.4 mirror those Transmission Facilities that meet the bright line criteria for "Medium Impact" Transmission Facilities under Attachment 1 of Reliability Standard CIP-002-5.1a. Each TO that owns Transmission Facilities that meet the criteria in Section 4.1.1.1 through 4.1.1.4 is required to perform a risk assessment as specified in Requirement R1 to identify its Transmission stations and Transmission substations, and their associated primary control centers, that if rendered inoperable or damaged as a result of a physical attack could result in instability, uncontrolled separation, or Cascading within an Interconnection. The DT expects this population will be small and that many TOs that meet the applicability of this standard will not actually identify any such Facilities. Only those TOs with Transmission stations or Transmission substations identified in the risk assessment (and verified under Requirement R2) have performance obligations under Requirements R3 through R6.

This standard also applies to TOPs. A TOP's obligations under the standard, however, are only triggered if the TOP is notified by an applicable TO under Requirement R3 that the TOP operates a primary control center that operationally controls a Transmission station(s) or Transmission substation(s) identified in the Requirement R1 risk assessment. A primary control center operationally controls a Transmission station or Transmission substation when the control center's electronic actions can cause direct physical action at the identified Transmission station or Transmission substation, such as opening a breaker, as opposed to a control center that only has information from the Transmission station or Transmission substation and must coordinate direct action through another entity. Only TOPs who are notified that they have primary control centers under this standard have performance obligations under Requirements R4 through R6. In other words, primary control center for purposes of this Standard is the control center that the TO or TOP, respectively, uses as its primary, permanently-manned site to physically operate a Transmission station or Transmission substation that is identified in Requirement R1 and verified in Requirement R2. Control

centers that provide back-up capability are not applicable, as they are a form of resiliency and intentionally redundant.

The DT considered several options for bright line criteria that could be used to determine applicability and provide an initial threshold that defines the set of Transmission stations and Transmission substations that would meet the directives of the FERC order on physical security (*i.e.*, those that could cause instability, uncontrolled separation, or Cascading within an Interconnection). The DT determined that using the criteria for Medium Impact Transmission Facilities in Attachment 1 of CIP-002-5.1a would provide a conservative threshold for defining which Transmission stations and Transmission substations must be included in the risk assessment in Requirement R1 of CIP-014. Additionally, the DT concluded that using the CIP-002-5.1a Medium Impact criteria was appropriate because it has been approved by stakeholders, NERC, and FERC, and its use provides a technically sound basis to determine which TOs should conduct the risk assessment. As described in CIP-002-5.1a, the failure of a Transmission station or Transmission substation that meets the Medium Impact criteria could have the capability to result in exceeding one or more Interconnection Reliability Operating Limits (IROLs). The DT understands that using this bright line criteria to determine applicability may require some TOs to perform risk assessments under Requirement R1 that will result in a finding that none of their Transmission stations or Transmission substations would pose a risk of instability, uncontrolled separation, or Cascading within an Interconnection. However, the DT determined that higher bright lines could not be technically justified to ensure inclusion of all Transmission stations and Transmission substations, and their associated primary control centers that, if rendered inoperable or damaged as a result of a physical attack could result in instability, uncontrolled separation, or Cascading within an Interconnection. Further guidance and technical basis for the bright line criteria for Medium Impact Facilities can be found in the Guidelines and Technical Basis section of CIP-002-5.1a.

Additionally, the DT determined that it was not necessary to include Generator Operators and Generator Owners in the Reliability Standard. First, Transmission stations or Transmission substations interconnecting generation facilities are considered when determining applicability. TOs will consider those Transmission stations and Transmission substations that include a Transmission station on the high side of the Generator Step-up transformer using Applicability Section 4.1.1.1 and 4.1.1.2. As an example, a Transmission station or Transmission substation identified as a TO facility that interconnects generation will be subject to the Requirement R1 risk assessment if it operates at 500kV or greater or if it is connected at 200 kV – 499kV to three or more other Transmission stations or Transmission substations and has an "aggregate weighted value" exceeding 3,000 according to the table in Applicability Section 4.1.1.2. Second, the Transmission analysis or analyses conducted under Requirement R1 should take into account the impact of the loss of generation connected to applicable Transmission stations or Transmission substations. Additionally, the FERC order does not explicitly mention generation assets and is reasonably understood to focus on the most critical Transmission Facilities. The diagram below shows an example of a station.

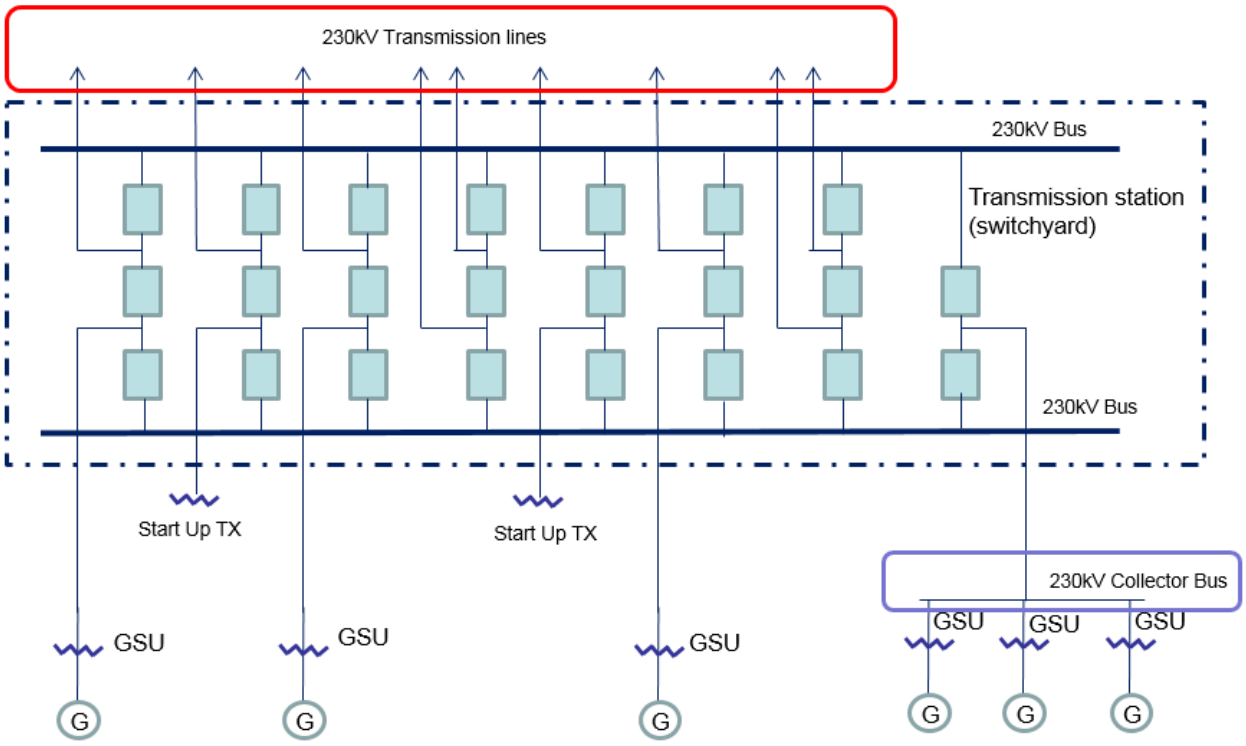

Also, the DT uses the phrase "Transmission stations or Transmission substations" to recognize the existence of both stations and substations. Many entities in industry consider a substation to be a location with physical borders (i.e., fence, wall, etc.) that contains at least an autotransformer. Locations also exist that do not contain autotransformers, and many entities in industry refer to those locations as stations (switching stations or switchyards). Therefore, the DT chose to use both "station" and "substation" to refer to the locations where groups of Transmission Facilities exist.

On the issue of joint ownership, the DT recognizes that this issue is not unique to CIP-014, and expects that the applicable TOs and TOPs will develop memorandums of understanding, agreements, Coordinated Functional Registrations, or procedures, etc., to designate responsibilities under CIP-014 when joint ownership is at issue, which is similar to what many entities have completed for other Reliability Standards.

The language contained in the applicability section regarding the collector bus is directly copied from CIP-002-5.1a, Attachment 1, and has no additional meaning within the CIP-014 standard.

Timeline

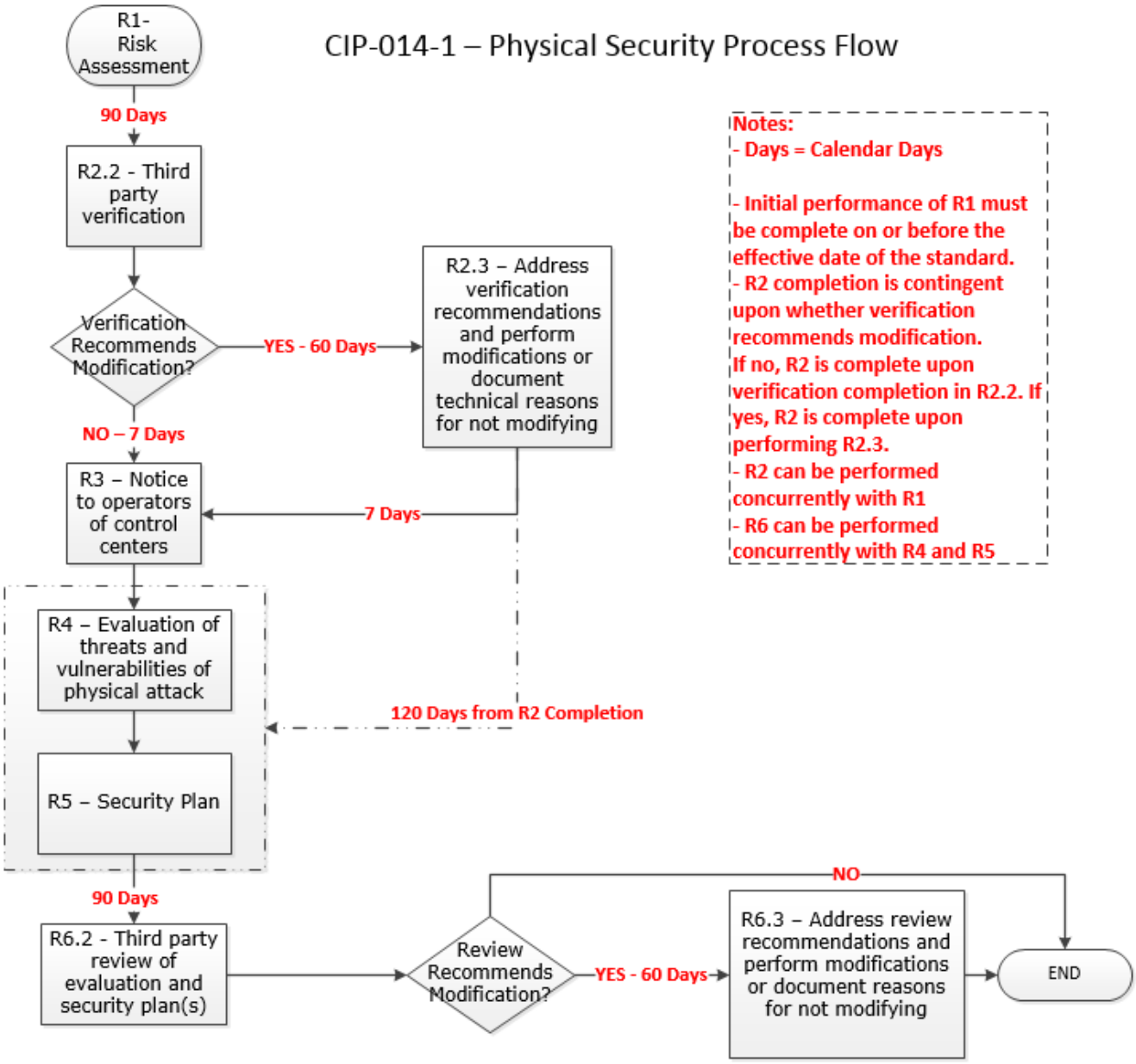
CIP-014-1 – Physical Security Process Flow
R1- Risk Assessment
90 Days
R2.2 - Third party verification
Verification Recommends Modification?
YES - 60 Days
R2.3 – Address verification recommendations and perform modifications or document technical reasons for not modifying
NO – 7 Days
R3 – Notice to operators of control centers
7 Days
R4 – Evaluation of threats and vulnerabilities of physical attack
120 Days from R2 Completion
R5 – Security Plan
90 Days
R6.2 - Third party review of evaluation and security plan(s)
Review Recommends Modification?
YES - 60 Days
NO
R6.3 – Address review recommendations and perform modifications or document reasons for not modifying
END
Notes:
- Days = Calendar Days
- Initial performance of R1 must be complete on or before the effective date of the standard.
- R2 completion is contingent upon whether verification recommends modification. If no, R2 is complete upon verification completion in R2.2. If yes, R2 is complete upon performing R2.3.
- R2 can be performed concurrently with R1
- R6 can be performed concurrently with R4 and R5

Rationale

During development of this standard, text boxes were embedded within the standard to explain the rationale for various parts of the standard. Upon Board of Trustees approval, the text from the rationale text boxes was moved to this section.

Rationale for Requirement R1 (This is for the old Requirement R1 in CIP-014-3):
This requirement meets the FERC directive from paragraph 6 of its March 7, 2014 order on physical security to perform a risk assessment to identify which facilities if rendered inoperable or damaged could impact an Interconnection through instability, uncontrolled separation, or cascading failures. The requirement is not intended to bring within the scope of the standard a Transmission station or Transmission substation unless the applicable TO determines through technical studies and analyses based on objective analysis, technical expertise, operating experience and experienced judgment that the loss of such facility would have a critical impact on the operation of the Interconnection in the event the asset is rendered inoperable or damaged. In the November 20, 2014 Order, FERC reiterated that "only an instability that has a "critical impact on the operation of the interconnection" warrants finding that the facility causing the instability is critical under Requirement R1." The TO may determine the criteria for critical impact by considering, among other criteria, any of the following:

- Criteria or methodology used by Transmission Planners or Planning Coordinators in TPL-001-4, Requirement R6
- NERC EOP-004-4~~2~~ reporting criteria
- Area or magnitude of potential impact

Requirement R1 also meets the FERC directive for periodic reevaluation of the risk assessment by requiring the risk assessment to be performed every 30 months (or 60 months for an entity that has not identified in a previous risk assessment any Transmission stations or Transmission substations that if rendered inoperable or damaged could result in instability, uncontrolled separation, or Cascading within an Interconnection).

After identifying each Transmission station and Transmission substation that meets the criteria in Requirement R1, it is important to additionally identify the primary control center that operationally controls that Transmission station or Transmission substation (i.e., the control center whose electronic actions can cause direct physical actions at the identified Transmission station and Transmission substation, such as opening a breaker, compared to a control center that only has the ability to monitor the Transmission station and Transmission substation and, therefore, must coordinate direct physical action through another entity).

Rationale for Requirement R2 (This is now Requirement R6 in CIP-014-4):
This requirement meets the FERC directive from paragraph 11 in the order on physical security requiring verification by an entity other than the owner or operator of the risk assessment performed under Requirement R1.

This requirement provides the flexibility for a TO to select registered and non-registered entities with transmission planning or analysis experience to perform the verification of the Requirement R1 risk assessment. The term "unaffiliated" means that the selected verifying entity cannot be a corporate affiliate (i.e., the verifying entity cannot be an entity that controls, is controlled by, or is under common control with, the TO). The verifying entity also cannot be a division of the TO that operates as a functional unit. The term "unaffiliated" is not intended to prohibit a governmental entity from using another government entity to be a verifier under Requirement R2.

Requirement R2 also provides the TO the flexibility to work with the verifying entity throughout the Requirement R1 risk assessment, which for some TO may be more efficient and effective. In other words, a TO could coordinate with their unaffiliated verifying entity to perform a Requirement R1 risk assessment to satisfy both Requirement R1 and Requirement R2 concurrently.

Planning Coordinator is a functional entity listed in Part 2.1. The Planning Coordinator and Planning Authority are the same entity as shown in the NERC Glossary of Terms Used in NERC Reliability Standards.

Rationale for Requirement R3 (This is now Requirement R7 in CIP-014-4):
Some TOPs will have obligations under this standard for certain primary control centers. Those obligations, however, are contingent upon a TO first identifying which Transmission stations and Transmission substations meet the criteria specified by Requirement R1, as verified according to Requirement R2. This requirement is intended to ensure that a TOP that has operational control of a primary control center identified in Requirement R1, Part 1.2 of a Transmission station or Transmission substation verified according to Requirement R2 receives notice of such identification so that the TOP may timely fulfill its resulting obligations under Requirements R4 through R6. Since the timing obligations in Requirements R4 through R6 are based upon completion of Requirement R2, the TO must also include notice of the date of completion of Requirement R2. Similarly, the TO must notify the TOP of any removals from identification that result from a subsequent risk assessment under Requirement R1 or the verification process under Requirement R2.

Rationale for Requirement R4 (This is now Requirement R8 in CIP-014-4):
This requirement meets the FERC directive from paragraph 8 in the order on physical security that the reliability standard must require tailored evaluation of potential threats and vulnerabilities to facilities identified in Requirement R1 and verified according to Requirement R2. Threats and vulnerabilities may vary from facility to facility based on factors such as the facility's location, size, function, existing protections, and attractiveness of the target. As such, the requirement does not mandate a one-size-fits-all approach but requires entities to account for the unique characteristics of their facilities.

Requirement R4 does not explicitly state when the evaluation of threats and vulnerabilities must occur or be completed. However, Requirement R5 requires that the entity's security plan(s), which is dependent on the Requirement R4 evaluation, must be completed within 120 calendar days following completion of Requirement R2. Thus, an entity has the flexibility when to complete the Requirement R4 evaluation, provided that it is completed in time to comply with the requirement in Requirement R5 to develop a physical security plan 120 calendar days following completion of Requirement R2.

Rationale for Requirement R5 (This is now Requirement R9 in CIP-014-4):
This requirement meets the FERC directive from paragraph 9 in the order on physical security requiring the development and implementation of a security plan(s) designed to protect against attacks to the facilities identified in Requirement R1 based on the assessment performed under Requirement R4.

Rationale for Requirement R6 (This is now Requirement R10 in CIP-014-4):
This requirement meets the FERC directive from paragraph 11 in the order on physical security requiring review by an entity other than the owner or operator with appropriate expertise of the evaluation performed according to Requirement R4 and the security plan(s) developed according to Requirement R5.

As with the verification required by Requirement R2, Requirement R6 provides TOs and TOPs the flexibility to work with the third party reviewer throughout the Requirement R4 evaluation and the development of the Requirement R5 security plan(s). This would allow entities to satisfy their obligations under Requirement R6 concurrent with the satisfaction of their obligations under Requirements R4 and R5.

NERC
NORTH AMERICAN ELECTRIC RELIABILITY CORPORATION

Violation Risk Factor and Violation Severity Level Justifications

Project 2023-06 CIP-014 Risk Assessment Refinement (CIP-014-4)

This document provides the drafting team's justification for assignment of violation risk factors (VRFs) and violation severity levels (VSLs) for each requirement in CIP-014-4 Physical Security. Each requirement is assigned a VRF and a VSL. These elements support the determination of an initial value range for the Base Penalty Amount regarding violations of requirements in FERC-approved Reliability Standards, as defined in the Electric Reliability Organizations (ERO) Sanction Guidelines. The drafting team applied the following NERC criteria and FERC Guidelines when developing the VRFs and VSLs for the requirements.

NERC Criteria for Violation Risk Factors

High Risk Requirement

A requirement that, if violated, could directly cause or contribute to Bulk Electric System instability, separation, or a cascading sequence of failures, or could place the Bulk Electric System at an unacceptable risk of instability, separation, or cascading failures; or, a requirement in a planning time frame that, if violated, could, under emergency, abnormal, or restorative conditions anticipated by the preparations, directly cause or contribute to Bulk Electric System instability, separation, or a cascading sequence of failures, or could place the Bulk Electric System at an unacceptable risk of instability, separation, or cascading failures, or could hinder restoration to a normal condition.

Medium Risk Requirement

A requirement that, if violated, could directly affect the electrical state or the capability of the Bulk Electric System, or the ability to effectively monitor and control the Bulk Electric System. However, violation of a medium risk requirement is unlikely to lead to Bulk Electric System instability, separation, or cascading failures; or, a requirement in a planning time frame that, if violated, could, under emergency, abnormal, or restorative conditions anticipated by the preparations, directly and adversely affect the electrical state or capability of the Bulk Electric System, or the ability to effectively monitor, control, or restore the Bulk Electric System. However, violation of a medium risk requirement is unlikely, under emergency, abnormal, or restoration conditions anticipated by the preparations, to lead to Bulk Electric System instability, separation, or cascading failures, nor to hinder restoration to a normal condition.

Lower Risk Requirement
A requirement that is administrative in nature and a requirement that, if violated, would not be expected to adversely affect the electrical state or capability of the Bulk Electric System, or the ability to effectively monitor and control the Bulk Electric System; or, a requirement that is administrative in nature and a requirement in a planning time frame that, if violated, would not, under the emergency, abnormal, or restorative conditions anticipated by the preparations, be expected to adversely affect the electrical state or capability of the Bulk Electric System, or the ability to effectively monitor, control, or restore the Bulk Electric System.

FERC Guidelines for Violation Risk Factors

Guideline (1) – Consistency with the Conclusions of the Final Blackout Report

FERC seeks to ensure that VRFs assigned to Requirements of Reliability Standards in these identified areas appropriately reflect their historical critical impact on the reliability of the Bulk-Power System. In the VSL Order, FERC listed critical areas (from the Final Blackout Report) where violations could severely affect the reliability of the Bulk-Power System:

- Emergency operations
- Vegetation management
- Operator personnel training
- Protection systems and their coordination
- Operating tools and backup facilities
- Reactive power and voltage control
- System modeling and data exchange
- Communication protocol and facilities
- Requirements to determine equipment ratings
- Synchronized data recorders
- Clearer criteria for operationally critical facilities
- Appropriate use of transmission loading relief.

Guideline (2) – Consistency within a Reliability Standard
FERC expects a rational connection between the sub-Requirement VRF assignments and the main Requirement VRF assignment.

Guideline (3) – Consistency among Reliability Standards
FERC expects the assignment of VRFs corresponding to Requirements that address similar reliability goals in different Reliability Standards would be treated comparably.

Guideline (4) – Consistency with NERC's Definition of the Violation Risk Factor Level
Guideline (4) was developed to evaluate whether the assignment of a particular VRF level conforms to NERC's definition of that risk level.

Guideline (5) – Treatment of Requirements that Co-mingle More Than One Obligation
Where a single Requirement co-mingles a higher risk reliability objective and a lesser risk reliability objective, the VRF assignment for such Requirements must not be watered down to reflect the lower risk level associated with the less important objective of the Reliability Standard.

NERC Criteria for Violation Severity Levels

VSLs define the degree to which compliance with a requirement was not achieved. Each requirement must have at least one VSL. While it is preferable to have four VSLs for each requirement, some requirements do not have multiple "degrees" of non-compliant performance and may have only one, two, or three VSLs.

VSLs should be based on NERC's overarching criteria shown in the table below:

Lower VSL	Moderate VSL	High VSL	Severe VSL
The performance or product measured almost meets the full intent of the requirement.	The performance or product measured meets the majority of the intent of the requirement.	The performance or product measured does not meet the majority of the intent of the requirement, but does meet some of the intent.	The performance or product measured does not substantively meet the intent of the requirement.

FERC Order of Violation Severity Levels

The FERC VSL guidelines are presented below, followed by an analysis of whether the VSLs proposed for each requirement in the standard meet the FERC Guidelines for assessing VSLs:

Guideline (1) – Violation Severity Level Assignments Should Not Have the Unintended Consequence of Lowering the Current Level of Compliance

Compare the VSLs to any prior levels of non-compliance and avoid significant changes that may encourage a lower level of compliance than was required when levels of non-compliance were used.

Guideline (2) – Violation Severity Level Assignments Should Ensure Uniformity and Consistency in the Determination of Penalties

A violation of a "binary" type requirement must be a "Severe" VSL.
Do not use ambiguous terms such as "minor" and "significant" to describe non-compliant performance.

Guideline (3) – Violation Severity Level Assignment Should Be Consistent with the Corresponding Requirement

VSLs should not expand on what is required in the requirement.

Guideline (4) – Violation Severity Level Assignment Should Be Based on a Single Violation, Not on a Cumulative Number of Violations

Unless otherwise stated in the requirement, each instance of non-compliance with a requirement is a separate violation. Section 4 of the Sanction Guidelines states that assessing penalties on a per violation per day basis is the "default" for penalty calculations.

VRF Justifications for CIP-014-4, Requirement R1	
Proposed VRF	**High**
NERC VRF Discussion	A VRF of higher is appropriate because the requirement, if violated, could directly cause or contribute to Bulk Electric System (BES) instability, separation, or a cascading sequence of failures, or could place the BES at an unacceptable risk of instability, separation, or cascading failures. The VRF is revised and unchanged from the last FERC approved version.
FERC VRF G1 Discussion Guideline 1- Consistency with Blackout Report	This VRF is consistent with the identified areas from the FERC list of critical areas in the Final Blackout Report.
FERC VRF G2 Discussion Guideline 2- Consistency within a Reliability Standard	The VRF for Requirement R1 is consistent with those connections between the sub-Requirement VRF assignments and the main Requirement VRF assignment.
FERC VRF G3 Discussion Guideline 3- Consistency among Reliability Standards	This VRF is consistent with other VRFs that address similar reliability goals in different Reliability Standards.
FERC VRF G4 Discussion Guideline 4- Consistency with NERC Definitions of VRFs	This VRF is consistent with the definition of a High VRF requirement per the criteria filed with FERC as part of the ERO's Sanctions Guidelines.
FERC VRF G5 Discussion Guideline 5- Treatment of Requirements that Co-mingle More	This requirement does not mingle a higher risk reliability objective and a lesser risk reliability objective. Therefore, the VRF reflects the risk of the whole requirement.

VRF Justifications for CIP-014-4, Requirement R1	
Proposed VRF	**High**
than One Obligation	

VSLs for CIP-014-4, Requirement R1			
Lower	**Moderate**	**High**	**Severe**
The Transmission Owner identified each applicable Transmission station(s) and Transmission substation(s) per Attachment 1, but did so after 36 calendar months, but less than or equal to 38 calendar months. OR The Transmission Owner identified each applicable Transmission station(s) and Transmission substation(s), but failed to identify less than or equal to 10% of the applicable Transmission station(s) and Transmission substation(s) per Attachment 1.	The Transmission Owner identified each applicable Transmission station(s) and Transmission substation(s) per Attachment 1, but did so after 38 calendar months, but less than or equal to 40 calendar months. OR The Transmission Owner identified each applicable Transmission station(s) and Transmission substation(s), but failed to identify more than 10% and less than or equal to 20% of the applicable Transmission station(s) and Transmission substation(s) per Attachment 1.	The Transmission Owner identified each applicable Transmission station(s) and Transmission substation(s) per Attachment 1, but did so after 40 calendar months, but less than or equal to 42 calendar months. OR The Transmission Owner identified each applicable Transmission station(s) and Transmission substation(s), but failed to identify more than 20% and less than or equal to 30% of the applicable Transmission station(s) and Transmission substation(s) per Attachment 1.	The Transmission Owner failed to identify each applicable Transmission station(s) and Transmission substation(s) per Attachment 1. OR The Transmission Owner identified each applicable Transmission station(s) and Transmission substation(s) per Attachment 1, but did so after more than 42 calendar months. OR The Transmission Owner identified each applicable Transmission station(s) and Transmission substation(s), but failed to identify more than 30% of the applicable Transmission station(s) and Transmission substation(s) per Attachment 1.

VSL Justifications for CIP-014-4, Requirement R1	
FERC VSL G1 Violation Severity Level Assignments Should Not Have the Unintended Consequence of Lowering the Current Level of Compliance	The proposed VSLs do not have the unintended consequence of lowering the level of compliance.
FERC VSL G2 Violation Severity Level Assignments Should Ensure Uniformity and Consistency in the Determination of Penalties Guideline 2a: The Single Violation Severity Level Assignment Category for "Binary" Requirements Is Not Consistent Guideline 2b: Violation Severity Level Assignments that Contain Ambiguous Language	The proposed VSLs are not binary and do not use any ambiguous terminology, thereby supporting uniformity and consistency in the determination of similar penalties for similar violations.
FERC VSL G3 Violation Severity Level Assignment Should Be Consistent with the Corresponding Requirement	The proposed VSLs use the same terminology as used in the associated requirement and are, therefore, consistent with the requirement.
FERC VSL G4 Violation Severity Level Assignment Should Be Based on A Single Violation, Not on A Cumulative Number of Violations	Each VSL is based on a single violation and not cumulative violations.

VRF Justifications for CIP-014-4, Requirement R2	
Proposed VRF	**Medium**
NERC VRF Discussion	A VRF of Medium is appropriate because, if violated, it could directly affect the electrical state or the capability of the BES, or the ability to effectively monitor and control the BES; however, a violation is unlikely to lead to BES instability, separation, or cascading failures.
FERC VRF G1 Discussion Guideline 1- Consistency with Blackout Report	This VRF is consistent with the identified areas from the FERC list of critical areas in the Final Blackout Report.
FERC VRF G2 Discussion Guideline 2- Consistency within a Reliability Standard	The VRF for Requirement R2 is consistent with those connections between the sub-Requirement VRF assignments and the main Requirement VRF assignment.
FERC VRF G3 Discussion Guideline 3- Consistency among Reliability Standards	This VRF is consistent with other VRFs that address similar reliability goals in different Reliability Standards.
FERC VRF G4 Discussion Guideline 4- Consistency with NERC Definitions of VRFs	This VRF is consistent with the definition of a Medium VRF requirement per the criteria filed with FERC as part of the ERO's Sanctions Guidelines.
FERC VRF G5 Discussion Guideline 5- Treatment of Requirements that Co-mingle More than One Obligation	This requirement does not mingle a higher risk reliability objective and a lesser risk reliability objective. Therefore, the VRF reflects the risk of the whole requirement.

VSLs for CIP-014-4, Requirement R2			
Lower	**Moderate**	**High**	**Severe**
N/A	N/A	N/A	The Transmission Owner with applicable Transmission station(s) or Transmission substation(s) identified in Requirement R1 did not identify existing Bulk Electric System Transmission station(s) and Bulk Electric System Transmission substation(s), irrespective of ownership, within 1500 feet or 457 meters (the shortest distance, measured substation fence line to substation fence line) of an applicable Transmission station or Transmission substation identified in Requirement R1.

VSL Justifications for CIP-014-4, Requirement R2	
FERC VSL G1 Violation Severity Level Assignments Should Not Have the Unintended Consequence of Lowering the Current Level of Compliance	This is a new Requirement and does not have the unintended consequence of lowering the current level of compliance.
FERC VSL G2 Violation Severity Level Assignments Should Ensure Uniformity and Consistency in the Determination of Penalties	The proposed VSLs are binary and do not use any ambiguous terminology, thereby supporting uniformity and consistency in the determination of similar penalties for similar violations. The new Requirement R2 is a binary requirement and thus only assigned a Severe VSL because the Transmission Owners either have or have not identified proximate Transmission station(s) and Transmission substation(s), irrespective of ownership, within 1,500 feet or 457 meters (the shortest distance, measured substation fence line to substation fence line) of an applicable Transmission station or Transmission substation identified in Requirement R1.

VSL Justifications for CIP-014-4, Requirement R2	
Guideline 2a: The Single Violation Severity Level Assignment Category for "Binary" Requirements Is Not Consistent Guideline 2b: Violation Severity Level Assignments that Contain Ambiguous Language	
FERC VSL G3 Violation Severity Level Assignment Should Be Consistent with the Corresponding Requirement	The proposed VSLs use the same terminology as used in the associated requirement and are, therefore, consistent with the requirement.
FERC VSL G4 Violation Severity Level Assignment Should Be Based on A Single Violation, Not on A Cumulative Number of Violations	Each VSL is based on a single violation and not cumulative violations.

VRF Justifications for CIP-014-4, Requirement R3	
Proposed VRF	**High**
NERC VRF Discussion	A VRF of higher is appropriate because the requirement, if violated, could directly cause or contribute to BES instability, separation, or a cascading sequence of failures, or could place the BES at an unacceptable risk of instability, separation, or cascading failures.
FERC VRF G1 Discussion Guideline 1- Consistency with	This VRF is consistent with the identified areas from the FERC list of critical areas in the Final Blackout Report.

VRF Justifications for CIP-014-4, Requirement R3	
Proposed VRF	**High**
Blackout Report	
FERC VRF G2 Discussion Guideline 2- Consistency within a Reliability Standard	The VRF for Requirement R3 is consistent with those connections between the sub-Requirement VRF assignments and the main Requirement VRF assignment.
FERC VRF G3 Discussion Guideline 3- Consistency among Reliability Standards	This VRF is consistent with other VRFs that address similar reliability goals in different Reliability Standards.
FERC VRF G4 Discussion Guideline 4- Consistency with NERC Definitions of VRFs	This VRF is consistent with the definition of a High VRF requirement per the criteria filed with FERC as part of the ERO's Sanctions Guidelines.
FERC VRF G5 Discussion Guideline 5- Treatment of Requirements that Co-mingle More than One Obligation	This requirement does mingle a higher risk reliability objective and risk reliability objective. Therefore, the VRF reflects the risk of the whole requirement.

VSLs for CIP-014-4, Requirement R3			
Lower	**Moderate**	**High**	**Severe**
N/A	The Transmission Owner has a risk assessment methodology that failed to include one of the requirements listed in Parts 3.1 through 3.3.	The Transmission Owner has a risk assessment methodology that failed to include two of the requirements listed in Parts 3.1 through 3.3.	The Transmission Owner has a risk assessment methodology that failed to include all three of the requirements listed in Parts 3.1 through 3.3. OR The Transmission Owner does not

			have a risk assessment methodology.

VSL Justifications for CIP-014-4, Requirement R3	
FERC VSL G1 Violation Severity Level Assignments Should Not Have the Unintended Consequence of Lowering the Current Level of Compliance	The proposed VSLs do not have the unintended consequence of lowering the level of compliance.
FERC VSL G2 Violation Severity Level Assignments Should Ensure Uniformity and Consistency in the Determination of Penalties Guideline 2a: The Single Violation Severity Level Assignment Category for "Binary" Requirements Is Not Consistent Guideline 2b: Violation Severity Level Assignments that Contain Ambiguous Language	The proposed VSLs are not binary and do not use any ambiguous terminology, thereby supporting uniformity and consistency in the determination of similar penalties for similar violations.
FERC VSL G3 Violation Severity Level Assignment Should Be Consistent with the Corresponding Requirement	The proposed VSLs use the same terminology as used in the associated requirement and are, therefore, consistent with the requirement.
FERC VSL G4 Violation Severity Level Assignment Should Be Based on A Single	Each VSL is based on a single violation and not cumulative violations.

VSL Justifications for CIP-014-4, Requirement R3	
Violation, Not on A Cumulative Number of Violations	

VRF Justifications for CIP-014-4, Requirement R4	
Proposed VRF	**Medium**
NERC VRF Discussion	A VRF of Medium is appropriate because, if violated, it could directly affect the electrical state or the capability of the BES, or the ability to effectively monitor and control the BES; however, a violation is unlikely to lead to BES instability, separation, or cascading failures.
FERC VRF G1 Discussion Guideline 1- Consistency with Blackout Report	This VRF is consistent with the identified areas from the FERC list of critical areas in the Final Blackout Report.
FERC VRF G2 Discussion Guideline 2- Consistency within a Reliability Standard	The VRF for Requirement R4 is consistent with those connections between the sub-Requirement VRF assignments and the main Requirement VRF assignment.
FERC VRF G3 Discussion Guideline 3- Consistency among Reliability Standards	This VRF is consistent with other VRFs that address similar reliability goals in different Reliability Standards.
FERC VRF G4 Discussion Guideline 4- Consistency with NERC Definitions of VRFs	This VRF is consistent with the definition of a Medium VRF requirement per the criteria filed with FERC as part of the ERO's Sanctions Guidelines.
FERC VRF G5 Discussion Guideline 5- Treatment of Requirements that Co-mingle More	This requirement does not mingle a higher risk reliability objective and a lesser risk reliability objective. Therefore, the VRF reflects the risk of the whole requirement.

VRF Justifications for CIP-014-4, Requirement R4	
Proposed VRF	**Medium**
than One Obligation	

VSLs for CIP-014-4, Requirement R4			
Lower	**Moderate**	**High**	**Severe**
The Transmission Owner with applicable Transmission station(s) and Transmission substation(s) identified in Requirement R1 owned by multiple Transmission Owners failed to coordinate with each appropriate Transmission Owner(s) to determine and document their individual and joint responsibilities for documenting a risk assessment methodology under Requirement R3 and for performing any required risk assessments per Requirement R5 for less than or equal to 25% of jointly owned applicable Transmission station(s) and Transmission substation(s).	The Transmission Owner with applicable Transmission station(s) and Transmission substation(s) identified in Requirement R1 owned by multiple Transmission Owners failed to coordinate with each appropriate Transmission Owner(s) to determine and document their individual and joint responsibilities for documenting a risk assessment methodology under Requirement R3 and for performing any required risk assessments per Requirement R5 for more than 25% and less than or equal to 50% of jointly owned applicable Transmission station(s) and Transmission substation(s).	The Transmission Owner with applicable Transmission station(s) and Transmission substation(s) identified in Requirement owned by multiple Transmission Owners failed to coordinate with each appropriate Transmission Owner(s) to determine and document their individual and joint responsibilities for documenting a risk assessment methodology under Requirement R3 and for performing any required risk assessments per Requirement R5 for more than 50% and less than or equal to 75% of jointly owned applicable Transmission station(s) and Transmission substation(s).	The Transmission Owner with applicable Transmission station(s) and Transmission substation(s) identified in Requirement R1 owned by multiple Transmission Owners failed to coordinate with each appropriate Transmission Owner(s) to determine and document their individual and joint responsibilities for documenting a risk assessment methodology under Requirement R3 and for performing any required risk assessments per Requirement R5 for more than 75% and less than or equal to 100% of jointly owned applicable Transmission station(s) and Transmission substation(s).

VSL Justifications for CIP-014-4, Requirement R4	
FERC VSL G1 Violation Severity Level Assignments Should Not Have the Unintended Consequence of Lowering the Current Level of Compliance	The proposed VSLs do not have the unintended consequence of lowering the level of compliance.
FERC VSL G2 Violation Severity Level Assignments Should Ensure Uniformity and Consistency in the Determination of Penalties Guideline 2a: The Single Violation Severity Level Assignment Category for "Binary" Requirements Is Not Consistent Guideline 2b: Violation Severity Level Assignments that Contain Ambiguous Language	The proposed VSLs are not binary and do not use any ambiguous terminology, thereby supporting uniformity and consistency in the determination of similar penalties for similar violations.
FERC VSL G3 Violation Severity Level Assignment Should Be Consistent with the Corresponding Requirement	The proposed VSLs use the same terminology as used in the associated requirement and are, therefore, consistent with the requirement.
FERC VSL G4 Violation Severity Level Assignment Should Be Based on A Single Violation, Not on A Cumulative Number of Violations	Each VSL is based on a single violation and not cumulative violations.

VRF Justifications for CIP-014-4, Requirement R5	
Proposed VRF	**High**
NERC VRF Discussion	The VRF for this new Requirement R5 remains High because it is one of the two sub-Requirements of Requirement R1 from the previously FERC approved CIP-014-3 Reliability Standard.
FERC VRF G1 Discussion Guideline 1- Consistency with Blackout Report	This VRF is consistent with the identified areas from the FERC list of critical areas in the Final Blackout Report.
FERC VRF G2 Discussion Guideline 2- Consistency within a Reliability Standard	The VRF for Requirement R5 is consistent with those connections between the sub-Requirement VRF assignments and the main Requirement VRF assignment.
FERC VRF G3 Discussion Guideline 3- Consistency among Reliability Standards	This VRF is consistent with other VRFs that address similar reliability goals in different Reliability Standards.
FERC VRF G4 Discussion Guideline 4- Consistency with NERC Definitions of VRFs	This VRF is consistent with the definition of a High VRF requirement per the criteria filed with FERC as part of the ERO's Sanctions Guidelines.
FERC VRF G5 Discussion Guideline 5- Treatment of Requirements that Co-mingle More than One Obligation	This requirement does mingle a higher risk reliability objective and risk reliability objective. Therefore, the VRF reflects the risk of the whole requirement.

VSLs for CIP-014-4, Requirement R5			
Lower	**Moderate**	**High**	**Severe**
The Transmission Owner performed a risk assessment, but did so after 36 calendar months, but less than or equal to 38 calendar months.	The Transmission Owner performed a risk assessment, but did so after 38 calendar months, but less than or equal to 40 calendar months. OR The Transmission Owner performed a risk assessment inconsistent with one of the methodology requirements listed in Requirement R3, Parts 3.1 through 3.3.	The Transmission Owner performed a risk assessment, but did so after 40 calendar months, but less than or equal to 42 calendar months. OR The Transmission Owner performed a risk assessment inconsistent with two of the methodology requirements listed in Requirement R3, Parts 3.1 through 3.3. OR The Transmission Owner performed a risk assessment, but failed to include the primary control center identified in Part 5.2.	The Transmission Owner performed a risk assessment, but did so after more than 42 calendar months. OR The Transmission Owner performed a risk assessment inconsistent with all three of the methodology requirements listed in Requirement R3, Parts 3.1 through 3.3.

VSL Justifications for CIP-014-4, Requirement R5	
FERC VSL G1 Violation Severity Level Assignments Should Not Have the Unintended Consequence of Lowering the Current Level of Compliance	The proposed VSLs do not have the unintended consequence of lowering the level of compliance.
FERC VSL G2 Violation Severity Level Assignments	The proposed VSLs are not binary and do not use any ambiguous terminology, thereby supporting uniformity and consistency in the determination of similar penalties for similar violations.

VSL Justifications for CIP-014-4, Requirement R5	
Should Ensure Uniformity and Consistency in the Determination of Penalties Guideline 2a: The Single Violation Severity Level Assignment Category for "Binary" Requirements Is Not Consistent Guideline 2b: Violation Severity Level Assignments that Contain Ambiguous Language	
FERC VSL G3 Violation Severity Level Assignment Should Be Consistent with the Corresponding Requirement	The proposed VSLs use the same terminology as used in the associated requirement and are, therefore, consistent with the requirement.
FERC VSL G4 Violation Severity Level Assignment Should Be Based on A Single Violation, Not on A Cumulative Number of Violations	Each VSL is based on a single violation and not cumulative violations.

VRF Justification for CIP-014-4, Requirement R6

This Requirement is the same as Requirement R2 in CIP-014-3. The VRF did not change from the previously FERC approved CIP-014-3 Reliability Standard.

VSL Justification for CIP-014-4, Requirement R6

The Requirement is the same as Requirement R2 in the previously FERC approved CIP-014-3 Reliability Standard. The VSL did not have material changes except for the reference Requirement numbers because 5 (five) new Requirements were added.

VRF Justification for CIP-014-4, Requirement R7

This Requirement is the same as Requirement R3 in CIP-014-3. The VRF did not change from the previously FERC approved CIP-014-3 Reliability Standard.

VSL Justification for CIP-014-4, Requirement R7

The Requirement is the same as Requirement R3 in the previously FERC approved CIP-014-3 Reliability Standard. The VSL did not have material changes except for the reference Requirement numbers because 5 (five) new Requirements were added.

VRF Justification for CIP-014-4, Requirement R8

This Requirement is the same as Requirement R4 in CIP-014-3. The VRF did not change from the previously FERC approved CIP-014-3 Reliability Standard.

VSL Justification for CIP-014-4, Requirement R8

The Requirement is the same as Requirement R4 in CIP-014-3. The VSL did not have material changes from the previously FERC approved CIP-014-3 Reliability Standard except changed “Responsible Entity” to “responsible entity” and the reference Requirement numbers because 5 (five) new Requirements were added.

VRF Justification for CIP-014-4, Requirement R9

This Requirement is the same as Requirement R5 in CIP-014-3. The VRF did not change from the previously FERC approved CIP-014-3 Reliability Standard.

VSL Justification for CIP-014-4, Requirement R9

The Requirement is the same as Requirement R5 in CIP-014-3. The VSL did not have material change from the previously FERC approved CIP-014-3 Reliability Standard except changed “Responsible Entity” to “responsible entity” and the reference Requirement numbers because 5 (five) new Requirements were added.

VRF Justification for CIP-014-4, Requirement R10

This Requirement is the same as Requirement R6 in CIP-014-3. The VRF did not change from the previously FERC approved CIP-014-3 Reliability Standard.

VSL Justification for CIP-014-4, Requirement R10

VSLs for CIP-014-4, Requirement R10			
Lower	**Moderate**	**High**	**Severe**
The responsible entity had an unaffiliated third party review the evaluation performed under Requirement R8 and the security plan(s) developed under Requirement R9, but did so in more than 90 calendar days, but less than or equal to 100 calendar days. OR The responsible entity had an unaffiliated third party review the evaluation performed under Requirement R8 and the security plan(s) developed under Requirement R9 and modified or documented the reason for not modifying the security plan(s) as specified in Part 10.3, but did so more than 70 calendar days and less than or equal to 80 calendar days following completion of the third party review.	The responsible entity had an unaffiliated third party review the evaluation performed under Requirement R8 and the security plan(s) developed under Requirement R9, but did so in more than 100 calendar days, but less than or equal to 110 calendar days. OR The responsible entity had an unaffiliated third party review the evaluation performed under Requirement R8 and the security plan(s) developed under Requirement R9 and modified or documented the reason for not modifying the security plan(s) as specified in Part 10.3, but did so more than 80 calendar days following completion of the third party review. OR The responsible entity had an unaffiliated third party review the evaluation performed under Requirement R8 and the security plan(s) developed under Requirement R9, but did not document the reason for not	The responsible entity had an unaffiliated third party review the evaluation performed under Requirement R8 and the security plan(s) developed under Requirement R9, but did so more than 110 calendar days, but less than or equal to 120 calendar days. OR The responsible entity failed to have an unaffiliated third party review the evaluation performed under Requirement R8 and the security plan(s) developed under Requirement R9. OR The responsible entity had an unaffiliated third party review the evaluation performed under Requirement R8 and the security plan(s) developed under Requirement R9, but failed to implement procedures for protecting information per Part 10.4.	The responsible entity failed to have an unaffiliated third party review the evaluation performed under Requirement R8 and the security plan(s) developed under Requirement R9 in more than 120 calendar days.

	modifying the security plan(s) as specified in Part 10.3.		

VSL Justifications for CIP-014-4, Requirement R10	
FERC VSL G1 Violation Severity Level Assignments Should Not Have the Unintended Consequence of Lowering the Current Level of Compliance	This is an existing Requirement. The drafting team revised the VSL language for consistency with the proposed revisions to the standard. All of the violation severity levels stayed the same from the previously FERC-approved version
FERC VSL G2 Violation Severity Level Assignments Should Ensure Uniformity and Consistency in the Determination of Penalties Guideline 2a: The Single Violation Severity Level Assignment Category for "Binary" Requirements Is Not Consistent Guideline 2b: Violation Severity Level Assignments that Contain Ambiguous Language	The proposed VSLs are not binary and do not use any ambiguous terminology, thereby supporting uniformity and consistency in the determination of similar penalties for similar violations.
FERC VSL G3 Violation Severity Level Assignment Should Be Consistent with the Corresponding Requirement	The proposed VSLs use the same terminology as used in the associated requirement and are, therefore, consistent with the requirement.
FERC VSL G4 Violation Severity Level Assignment Should Be Based on A Single Violation, Not on A Cumulative	Each VSL is based on a single violation and not cumulative violations.

Number of Violations	

NERC
NORTH AMERICAN ELECTRIC RELIABILITY CORPORATION

Violation Risk Factor and Violation Severity Level Justifications

Project 2023-06 CIP-014 Risk Assessment Refinement (CIP-014-4)

This document provides the drafting team's justification for assignment of violation risk factors (VRFs) and violation severity levels (VSLs) for each requirement in CIP-014-4 Physical Security. Each requirement is assigned a VRF and a VSL. These elements support the determination of an initial value range for the Base Penalty Amount regarding violations of requirements in FERC-approved Reliability Standards, as defined in the Electric Reliability Organizations (ERO) Sanction Guidelines. The drafting team applied the following NERC criteria and FERC Guidelines when developing the VRFs and VSLs for the requirements.

NERC Criteria for Violation Risk Factors

High Risk Requirement

A requirement that, if violated, could directly cause or contribute to Bulk Electric System instability, separation, or a cascading sequence of failures, or could place the Bulk Electric System at an unacceptable risk of instability, separation, or cascading failures; or, a requirement in a planning time frame that, if violated, could, under emergency, abnormal, or restorative conditions anticipated by the preparations, directly cause or contribute to Bulk Electric System instability, separation, or a cascading sequence of failures, or could place the Bulk Electric System at an unacceptable risk of instability, separation, or cascading failures, or could hinder restoration to a normal condition.

Medium Risk Requirement

A requirement that, if violated, could directly affect the electrical state or the capability of the Bulk Electric System, or the ability to effectively monitor and control the Bulk Electric System. However, violation of a medium risk requirement is unlikely to lead to Bulk Electric System instability, separation, or cascading failures; or, a requirement in a planning time frame that, if violated, could, under emergency, abnormal, or restorative conditions anticipated by the preparations, directly and adversely affect the electrical state or capability of the Bulk Electric System, or the ability to effectively monitor, control, or restore the Bulk Electric System. However, violation of a medium risk requirement is unlikely, under emergency, abnormal, or restoration conditions anticipated by the preparations, to lead to Bulk Electric System instability, separation, or cascading failures, nor to hinder restoration to a normal condition.

Lower Risk Requirement
A requirement that is administrative in nature and a requirement that, if violated, would not be expected to adversely affect the electrical state or capability of the Bulk Electric System, or the ability to effectively monitor and control the Bulk Electric System; or, a requirement that is administrative in nature and a requirement in a planning time frame that, if violated, would not, under the emergency, abnormal, or restorative conditions anticipated by the preparations, be expected to adversely affect the electrical state or capability of the Bulk Electric System, or the ability to effectively monitor, control, or restore the Bulk Electric System.

FERC Guidelines for Violation Risk Factors

Guideline (1) – Consistency with the Conclusions of the Final Blackout Report

FERC seeks to ensure that VRFs assigned to Requirements of Reliability Standards in these identified areas appropriately reflect their historical critical impact on the reliability of the Bulk-Power System. In the VSL Order, FERC listed critical areas (from the Final Blackout Report) where violations could severely affect the reliability of the Bulk-Power System:

- Emergency operations
- Vegetation management
- Operator personnel training
- Protection systems and their coordination
- Operating tools and backup facilities
- Reactive power and voltage control
- System modeling and data exchange
- Communication protocol and facilities
- Requirements to determine equipment ratings
- Synchronized data recorders
- Clearer criteria for operationally critical facilities
- Appropriate use of transmission loading relief.

Guideline (2) – Consistency within a Reliability Standard
FERC expects a rational connection between the sub-Requirement VRF assignments and the main Requirement VRF assignment.

Guideline (3) – Consistency among Reliability Standards
FERC expects the assignment of VRFs corresponding to Requirements that address similar reliability goals in different Reliability Standards would be treated comparably.

Guideline (4) – Consistency with NERC's Definition of the Violation Risk Factor Level
Guideline (4) was developed to evaluate whether the assignment of a particular VRF level conforms to NERC's definition of that risk level.

Guideline (5) – Treatment of Requirements that Co-mingle More Than One Obligation
Where a single Requirement co-mingles a higher risk reliability objective and a lesser risk reliability objective, the VRF assignment for such Requirements must not be watered down to reflect the lower risk level associated with the less important objective of the Reliability Standard.

NERC Criteria for Violation Severity Levels

VSLs define the degree to which compliance with a requirement was not achieved. Each requirement must have at least one VSL. While it is preferable to have four VSLs for each requirement, some requirements do not have multiple "degrees" of non-compliant performance and may have only one, two, or three VSLs.

VSLs should be based on NERC's overarching criteria shown in the table below:

Lower VSL	Moderate VSL	High VSL	Severe VSL
The performance or product measured almost meets the full intent of the requirement.	The performance or product measured meets the majority of the intent of the requirement.	The performance or product measured does not meet the majority of the intent of the requirement, but does meet some of the intent.	The performance or product measured does not substantively meet the intent of the requirement.

FERC Order of Violation Severity Levels

The FERC VSL guidelines are presented below, followed by an analysis of whether the VSLs proposed for each requirement in the standard meet the FERC Guidelines for assessing VSLs:

Guideline (1) – Violation Severity Level Assignments Should Not Have the Unintended Consequence of Lowering the Current Level of Compliance

Compare the VSLs to any prior levels of non-compliance and avoid significant changes that may encourage a lower level of compliance than was required when levels of non-compliance were used.

Guideline (2) – Violation Severity Level Assignments Should Ensure Uniformity and Consistency in the Determination of Penalties

A violation of a "binary" type requirement must be a "Severe" VSL.
Do not use ambiguous terms such as "minor" and "significant" to describe non-compliant performance.

Guideline (3) – Violation Severity Level Assignment Should Be Consistent with the Corresponding Requirement

VSLs should not expand on what is required in the requirement.

Guideline (4) – Violation Severity Level Assignment Should Be Based on a Single Violation, Not on a Cumulative Number of Violations

Unless otherwise stated in the requirement, each instance of non-compliance with a requirement is a separate violation. Section 4 of the Sanction Guidelines states that assessing penalties on a per violation per day basis is the "default" for penalty calculations.

VRF Justifications for CIP-014-4, Requirement R1	
Proposed VRF	**High**
NERC VRF Discussion	A VRF of higher is appropriate because the requirement, if violated, could directly cause or contribute to Bulk Electric System (BES) instability, separation, or a cascading sequence of failures, or could place the BES at an unacceptable risk of instability, separation, or cascading failures. The VRF is revised and unchanged from the last FERC approved version.
FERC VRF G1 Discussion Guideline 1- Consistency with Blackout Report	This VRF is consistent with the identified areas from the FERC list of critical areas in the Final Blackout Report.
FERC VRF G2 Discussion Guideline 2- Consistency within a Reliability Standard	The VRF for Requirement R1 is consistent with those connections between the sub-Requirement VRF assignments and the main Requirement VRF assignment.
FERC VRF G3 Discussion Guideline 3- Consistency among Reliability Standards	This VRF is consistent with other VRFs that address similar reliability goals in different Reliability Standards.
FERC VRF G4 Discussion Guideline 4- Consistency with NERC Definitions of VRFs	This VRF is consistent with the definition of a High VRF requirement per the criteria filed with FERC as part of the ERO's Sanctions Guidelines.
FERC VRF G5 Discussion Guideline 5- Treatment of Requirements that Co-mingle More	This requirement does not mingle a higher risk reliability objective and a lesser risk reliability objective. Therefore, the VRF reflects the risk of the whole requirement.

VRF Justifications for CIP-014-4, Requirement R1	
Proposed VRF	**High**
than One Obligation	

VSLs for CIP-014-4, Requirement R1			
Lower	**Moderate**	**High**	**Severe**
The Transmission Owner identified each applicable Transmission station(s) and Transmission substation(s) per Attachment 1, but did so after 36 calendar months, but less than or equal to 38 calendar months. OR The Transmission Owner identified each applicable Transmission station(s) and Transmission substation(s), but failed to identify less than or equal to 10% of the applicable Transmission station(s) and Transmission substation(s) per Attachment 1.	The Transmission Owner identified each applicable Transmission station(s) and Transmission substation(s) per Attachment 1, but did so after 38 calendar months, but less than or equal to 40 calendar months. OR The Transmission Owner identified each applicable Transmission station(s) and Transmission substation(s), but failed to identify more than 10% and less than or equal to 20% of the applicable Transmission station(s) and Transmission substation(s) per Attachment 1.	The Transmission Owner identified each applicable Transmission station(s) and Transmission substation(s) per Attachment 1, but did so after 40 calendar months, but less than or equal to 42 calendar months. OR The Transmission Owner identified each applicable Transmission station(s) and Transmission substation(s), but failed to identify more than 20% and less than or equal to 30% of the applicable Transmission station(s) and Transmission substation(s) per Attachment 1.	The Transmission Owner failed to identify each applicable Transmission station(s) and Transmission substation(s) per Attachment 1. OR The Transmission Owner identified each applicable Transmission station(s) and Transmission substation(s) per Attachment 1, but did so after more than 42 calendar months. OR The Transmission Owner identified each applicable Transmission station(s) and Transmission substation(s), but failed to identify more than 30% of the applicable Transmission station(s) and Transmission substation(s) per Attachment 1.

VSL Justifications for CIP-014-4, Requirement R1	
FERC VSL G1 Violation Severity Level Assignments Should Not Have the Unintended Consequence of Lowering the Current Level of Compliance	The proposed VSLs do not have the unintended consequence of lowering the level of compliance.
FERC VSL G2 Violation Severity Level Assignments Should Ensure Uniformity and Consistency in the Determination of Penalties Guideline 2a: The Single Violation Severity Level Assignment Category for "Binary" Requirements Is Not Consistent Guideline 2b: Violation Severity Level Assignments that Contain Ambiguous Language	The proposed VSLs are not binary and do not use any ambiguous terminology, thereby supporting uniformity and consistency in the determination of similar penalties for similar violations.
FERC VSL G3 Violation Severity Level Assignment Should Be Consistent with the Corresponding Requirement	The proposed VSLs use the same terminology as used in the associated requirement and are, therefore, consistent with the requirement.
FERC VSL G4 Violation Severity Level Assignment Should Be Based on A Single Violation, Not on A Cumulative Number of Violations	Each VSL is based on a single violation and not cumulative violations.

VRF Justifications for CIP-014-4, Requirement R2	
Proposed VRF	**Medium**
NERC VRF Discussion	A VRF of Medium is appropriate because, if violated, it could directly affect the electrical state or the capability of the BES, or the ability to effectively monitor and control the BES; however, a violation is unlikely to lead to BES instability, separation, or cascading failures.
FERC VRF G1 Discussion Guideline 1- Consistency with Blackout Report	This VRF is consistent with the identified areas from the FERC list of critical areas in the Final Blackout Report.
FERC VRF G2 Discussion Guideline 2- Consistency within a Reliability Standard	The VRF for Requirement R2 is consistent with those connections between the sub-Requirement VRF assignments and the main Requirement VRF assignment.
FERC VRF G3 Discussion Guideline 3- Consistency among Reliability Standards	This VRF is consistent with other VRFs that address similar reliability goals in different Reliability Standards.
FERC VRF G4 Discussion Guideline 4- Consistency with NERC Definitions of VRFs	This VRF is consistent with the definition of a Medium VRF requirement per the criteria filed with FERC as part of the ERO's Sanctions Guidelines.
FERC VRF G5 Discussion Guideline 5- Treatment of Requirements that Co-mingle More than One Obligation	This requirement does not mingle a higher risk reliability objective and a lesser risk reliability objective. Therefore, the VRF reflects the risk of the whole requirement.

VSLs for CIP-014-4, Requirement R2			
Lower	**Moderate**	**High**	**Severe**
N/A	N/A	N/A	The Transmission Owner with applicable Transmission station(s) or Transmission substation(s) identified in Requirement R1 did not identify existing Bulk Electric System Transmission station(s) and Bulk Electric System Transmission substation(s), irrespective of ownership, within 1500 feet or 457 meters (the shortest distance, measured substation fence line to substation fence line) of an applicable Transmission station or Transmission substation identified in Requirement R1.

VSL Justifications for CIP-014-4, Requirement R2	
FERC VSL G1 Violation Severity Level Assignments Should Not Have the Unintended Consequence of Lowering the Current Level of Compliance	This is a new Requirement and does not have the unintended consequence of lowering the current level of compliance.
FERC VSL G2 Violation Severity Level Assignments Should Ensure Uniformity and Consistency in the Determination of Penalties	The proposed VSLs are binary and do not use any ambiguous terminology, thereby supporting uniformity and consistency in the determination of similar penalties for similar violations. The new Requirement R2 is a binary requirement and thus only assigned a Severe VSL because the Transmission Owners either have or have not identified proximate Transmission station(s) and Transmission substation(s), irrespective of ownership, within 1,500 feet or 457 meters (the shortest distance, measured substation fence line to substation fence line) of an applicable Transmission station or Transmission substation identified in Requirement R1.

VSL Justifications for CIP-014-4, Requirement R2	
Guideline 2a: The Single Violation Severity Level Assignment Category for "Binary" Requirements Is Not Consistent Guideline 2b: Violation Severity Level Assignments that Contain Ambiguous Language	
FERC VSL G3 Violation Severity Level Assignment Should Be Consistent with the Corresponding Requirement	The proposed VSLs use the same terminology as used in the associated requirement and are, therefore, consistent with the requirement.
FERC VSL G4 Violation Severity Level Assignment Should Be Based on A Single Violation, Not on A Cumulative Number of Violations	Each VSL is based on a single violation and not cumulative violations.

VRF Justifications for CIP-014-4, Requirement R3	
Proposed VRF	**High**
NERC VRF Discussion	A VRF of higher is appropriate because the requirement, if violated, could directly cause or contribute to BES instability, separation, or a cascading sequence of failures, or could place the BES at an unacceptable risk of instability, separation, or cascading failures.
FERC VRF G1 Discussion Guideline 1- Consistency with	This VRF is consistent with the identified areas from the FERC list of critical areas in the Final Blackout Report.

VRF Justifications for CIP-014-4, Requirement R3	
Proposed VRF	**High**
Blackout Report	
FERC VRF G2 Discussion Guideline 2- Consistency within a Reliability Standard	The VRF for Requirement R3 is consistent with those connections between the sub-Requirement VRF assignments and the main Requirement VRF assignment.
FERC VRF G3 Discussion Guideline 3- Consistency among Reliability Standards	This VRF is consistent with other VRFs that address similar reliability goals in different Reliability Standards.
FERC VRF G4 Discussion Guideline 4- Consistency with NERC Definitions of VRFs	This VRF is consistent with the definition of a High VRF requirement per the criteria filed with FERC as part of the ERO's Sanctions Guidelines.
FERC VRF G5 Discussion Guideline 5- Treatment of Requirements that Co-mingle More than One Obligation	This requirement does mingle a higher risk reliability objective and risk reliability objective. Therefore, the VRF reflects the risk of the whole requirement.

VSLs for CIP-014-4, Requirement R3			
Lower	**Moderate**	**High**	**Severe**
N/A	The Transmission Owner has a risk assessment methodology that failed to include one of the requirements listed in Parts 3.1 through 3.3.	The Transmission Owner has a risk assessment methodology that failed to include two of the requirements listed in Parts 3.1 through 3.3.	The Transmission Owner has a risk assessment methodology that failed to include all three of the requirements listed in Parts 3.1 through 3.3. OR The Transmission Owner does not

			have a risk assessment methodology.

VSL Justifications for CIP-014-4, Requirement R3	
FERC VSL G1 Violation Severity Level Assignments Should Not Have the Unintended Consequence of Lowering the Current Level of Compliance	The proposed VSLs do not have the unintended consequence of lowering the level of compliance.
FERC VSL G2 Violation Severity Level Assignments Should Ensure Uniformity and Consistency in the Determination of Penalties Guideline 2a: The Single Violation Severity Level Assignment Category for "Binary" Requirements Is Not Consistent Guideline 2b: Violation Severity Level Assignments that Contain Ambiguous Language	The proposed VSLs are not binary and do not use any ambiguous terminology, thereby supporting uniformity and consistency in the determination of similar penalties for similar violations.
FERC VSL G3 Violation Severity Level Assignment Should Be Consistent with the Corresponding Requirement	The proposed VSLs use the same terminology as used in the associated requirement and are, therefore, consistent with the requirement.
FERC VSL G4 Violation Severity Level Assignment Should Be Based on A Single	Each VSL is based on a single violation and not cumulative violations.

VSL Justifications for CIP-014-4, Requirement R3	
Violation, Not on A Cumulative Number of Violations	

VRF Justifications for CIP-014-4, Requirement R4	
Proposed VRF	**Medium**
NERC VRF Discussion	A VRF of Medium is appropriate because, if violated, it could directly affect the electrical state or the capability of the BES, or the ability to effectively monitor and control the BES; however, a violation is unlikely to lead to BES instability, separation, or cascading failures.
FERC VRF G1 Discussion Guideline 1- Consistency with Blackout Report	This VRF is consistent with the identified areas from the FERC list of critical areas in the Final Blackout Report.
FERC VRF G2 Discussion Guideline 2- Consistency within a Reliability Standard	The VRF for Requirement R4 is consistent with those connections between the sub-Requirement VRF assignments and the main Requirement VRF assignment.
FERC VRF G3 Discussion Guideline 3- Consistency among Reliability Standards	This VRF is consistent with other VRFs that address similar reliability goals in different Reliability Standards.
FERC VRF G4 Discussion Guideline 4- Consistency with NERC Definitions of VRFs	This VRF is consistent with the definition of a Medium VRF requirement per the criteria filed with FERC as part of the ERO's Sanctions Guidelines.
FERC VRF G5 Discussion Guideline 5- Treatment of Requirements that Co-mingle More	This requirement does not mingle a higher risk reliability objective and a lesser risk reliability objective. Therefore, the VRF reflects the risk of the whole requirement.

VRF Justifications for CIP-014-4, Requirement R4	
Proposed VRF	**Medium**
than One Obligation	

VSLs for CIP-014-4, Requirement R4			
Lower	**Moderate**	**High**	**Severe**
The Transmission Owner with applicable Transmission station(s) and Transmission substation(s) identified in Requirement R1 owned by multiple Transmission Owners failed to coordinate with each appropriate Transmission Owner(s) to determine and document their individual and joint responsibilities for documenting a risk assessment methodology under Requirement R3 and for performing any required risk assessments per Requirement R5 for less than or equal to 25% of jointly owned applicable Transmission station(s) and Transmission substation(s).	The Transmission Owner with applicable Transmission station(s) and Transmission substation(s) identified in Requirement R1 owned by multiple Transmission Owners failed to coordinate with each appropriate Transmission Owner(s) to determine and document their individual and joint responsibilities for documenting a risk assessment methodology under Requirement R3 and for performing any required risk assessments per Requirement R5 for more than 25% and less than or equal to 50% of jointly owned applicable Transmission station(s) and Transmission substation(s).	The Transmission Owner with applicable Transmission station(s) and Transmission substation(s) identified in Requirement owned by multiple Transmission Owners failed to coordinate with each appropriate Transmission Owner(s) to determine and document their individual and joint responsibilities for documenting a risk assessment methodology under Requirement R3 and for performing any required risk assessments per Requirement R5 for more than 50% and less than or equal to 75% of jointly owned applicable Transmission station(s) and Transmission substation(s).	The Transmission Owner with applicable Transmission station(s) and Transmission substation(s) identified in Requirement R1 owned by multiple Transmission Owners failed to coordinate with each appropriate Transmission Owner(s) to determine and document their individual and joint responsibilities for documenting a risk assessment methodology under Requirement R3 and for performing any required risk assessments per Requirement R5 for more than 75% and less than or equal to 100% of ~~any evidence for~~ jointly owned applicable Transmission station(s) and Transmission substation(s).

VSL Justifications for CIP-014-4, Requirement R4	
FERC VSL G1 Violation Severity Level Assignments Should Not Have the Unintended Consequence of Lowering the Current Level of Compliance	The proposed VSLs do not have the unintended consequence of lowering the level of compliance.
FERC VSL G2 Violation Severity Level Assignments Should Ensure Uniformity and Consistency in the Determination of Penalties Guideline 2a: The Single Violation Severity Level Assignment Category for "Binary" Requirements Is Not Consistent Guideline 2b: Violation Severity Level Assignments that Contain Ambiguous Language	The proposed VSLs are not binary and do not use any ambiguous terminology, thereby supporting uniformity and consistency in the determination of similar penalties for similar violations.
FERC VSL G3 Violation Severity Level Assignment Should Be Consistent with the Corresponding Requirement	The proposed VSLs use the same terminology as used in the associated requirement and are, therefore, consistent with the requirement.
FERC VSL G4 Violation Severity Level Assignment Should Be Based on A Single Violation, Not on A Cumulative Number of Violations	Each VSL is based on a single violation and not cumulative violations.

VRF Justifications for CIP-014-4, Requirement R5	
Proposed VRF	**High**
NERC VRF Discussion	The VRF for this new Requirement R5 remains High because it is one of the two sub-Requirements of Requirement R1 from the previously FERC approved CIP-014-3 Reliability Standard.
FERC VRF G1 Discussion Guideline 1- Consistency with Blackout Report	This VRF is consistent with the identified areas from the FERC list of critical areas in the Final Blackout Report.
FERC VRF G2 Discussion Guideline 2- Consistency within a Reliability Standard	The VRF for Requirement R5 is consistent with those connections between the sub-Requirement VRF assignments and the main Requirement VRF assignment.
FERC VRF G3 Discussion Guideline 3- Consistency among Reliability Standards	This VRF is consistent with other VRFs that address similar reliability goals in different Reliability Standards.
FERC VRF G4 Discussion Guideline 4- Consistency with NERC Definitions of VRFs	This VRF is consistent with the definition of a High VRF requirement per the criteria filed with FERC as part of the ERO's Sanctions Guidelines.
FERC VRF G5 Discussion Guideline 5- Treatment of Requirements that Co-mingle More than One Obligation	This requirement does mingle a higher risk reliability objective and risk reliability objective. Therefore, the VRF reflects the risk of the whole requirement.

VSLs for CIP-014-4, Requirement R5			
Lower	**Moderate**	**High**	**Severe**
The Transmission Owner performed a risk assessment, but did so after 36 calendar months, but less than or equal to 38 calendar months.	The Transmission Owner performed a risk assessment, but did so after 38 calendar months, but less than or equal to 40 calendar months. OR The Transmission Owner performed a risk assessment inconsistent with one of the methodology requirements listed in Requirement R3, Parts 3.1 through 3.3.	The Transmission Owner performed a risk assessment, but did so after 40 calendar months, but less than or equal to 42 calendar months. OR The Transmission Owner performed a risk assessment inconsistent with two of the methodology requirements listed in Requirement R3, Parts 3.1 through 3.3. OR The Transmission Owner performed a risk assessment, but failed to include the primary control center identified in Part 5.2.	The Transmission Owner performed a risk assessment, but did so after more than 42 calendar months. OR The Transmission Owner performed a risk assessment inconsistent with all three of the methodology requirements listed in Requirement R3, Parts 3.1 through 3.3.

VSL Justifications for CIP-014-4, Requirement R5	
FERC VSL G1 Violation Severity Level Assignments Should Not Have the Unintended Consequence of Lowering the Current Level of Compliance	The proposed VSLs do not have the unintended consequence of lowering the level of compliance.
FERC VSL G2 Violation Severity Level Assignments	The proposed VSLs are not binary and do not use any ambiguous terminology, thereby supporting uniformity and consistency in the determination of similar penalties for similar violations.

VSL Justifications for CIP-014-4, Requirement R5	
Should Ensure Uniformity and Consistency in the Determination of Penalties Guideline 2a: The Single Violation Severity Level Assignment Category for "Binary" Requirements Is Not Consistent Guideline 2b: Violation Severity Level Assignments that Contain Ambiguous Language	
FERC VSL G3 Violation Severity Level Assignment Should Be Consistent with the Corresponding Requirement	The proposed VSLs use the same terminology as used in the associated requirement and are, therefore, consistent with the requirement.
FERC VSL G4 Violation Severity Level Assignment Should Be Based on A Single Violation, Not on A Cumulative Number of Violations	Each VSL is based on a single violation and not cumulative violations.

VRF Justification for CIP-014-4, Requirement R6

This Requirement is the same as Requirement R2 in CIP-014-3. The VRF did not change from the previously FERC approved CIP-014-3 Reliability Standard.

VSL Justification for CIP-014-4, Requirement R6

The Requirement is the same as Requirement R2 in the previously FERC approved CIP-014-3 Reliability Standard. The VSL did not have material changes except for the reference Requirement numbers because 5 (five) new Requirements were added.

VRF Justification for CIP-014-4, Requirement R7

This Requirement is the same as Requirement R3 in CIP-014-3. The VRF did not change from the previously FERC approved CIP-014-3 Reliability Standard.

VSL Justification for CIP-014-4, Requirement R7

The Requirement is the same as Requirement R3 in the previously FERC approved CIP-014-3 Reliability Standard. The VSL did not have material changes except for the reference Requirement numbers because 5 (five) new Requirements were added.

VRF Justification for CIP-014-4, Requirement R8

This Requirement is the same as Requirement R4 in CIP-014-3. The VRF did not change from the previously FERC approved CIP-014-3 Reliability Standard.

VSL Justification for CIP-014-4, Requirement R8

The Requirement is the same as Requirement R4 in CIP-014-3. The VSL did not have material changes from the previously FERC approved CIP-014-3 Reliability Standard except changed “Responsible Entity” to “responsible entity” and the reference Requirement numbers because 5 (five) new Requirements were added.

VRF Justification for CIP-014-4, Requirement R9

This Requirement is the same as Requirement R5 in CIP-014-3. The VRF did not change from the previously FERC approved CIP-014-3 Reliability Standard.

VSL Justification for CIP-014-4, Requirement R9

The Requirement is the same as Requirement R5 in CIP-014-3. The VSL did not have material change from the previously FERC approved CIP-014-3 Reliability Standard except changed “Responsible Entity” to “responsible entity” and the reference Requirement numbers because 5 (five) new Requirements were added.

VRF Justification for CIP-014-4, Requirement R10

This Requirement is the same as Requirement R6 in CIP-014-3. The VRF did not change from the previously FERC approved CIP-014-3 Reliability Standard.

VSL Justification for CIP-014-4, Requirement R10

VSLs for CIP-014-4, Requirement R10			
Lower	**Moderate**	**High**	**Severe**
The responsible entity had an unaffiliated third party review the evaluation performed under Requirement R8 and the security plan(s) developed under Requirement R9, but did so in more than 90 calendar days, but less than or equal to 100 calendar days. OR The responsible entity had an unaffiliated third party review the evaluation performed under Requirement R8 and the security plan(s) developed under Requirement R9 and modified or documented the reason for not modifying the security plan(s) as specified in Part 10.3, but did so more than 70 calendar days and less than or equal to 80 calendar days following completion of the third party review.	The responsible entity had an unaffiliated third party review the evaluation performed under Requirement R8 and the security plan(s) developed under Requirement R9, but did so in more than 100 calendar days, but less than or equal to 110 calendar days. OR The responsible entity had an unaffiliated third party review the evaluation performed under Requirement R8 and the security plan(s) developed under Requirement R9 and modified or documented the reason for not modifying the security plan(s) as specified in Part 10.3, but did so more than 80 calendar days following completion of the third party review. OR The responsible entity had an unaffiliated third party review the evaluation performed under Requirement R8 and the security plan(s) developed under Requirement R9, but did not document the reason for not	The responsible entity had an unaffiliated third party review the evaluation performed under Requirement R8 and the security plan(s) developed under Requirement R9, but did so more than 110 calendar days, but less than or equal to 120 calendar days. OR The responsible entity failed to have an unaffiliated third party review the evaluation performed under Requirement R8 and the security plan(s) developed under Requirement R9. OR The responsible entity had an unaffiliated third party review the evaluation performed under Requirement R8 and the security plan(s) developed under Requirement R9, but failed to implement procedures for protecting information per Part 10.4.	The responsible entity failed to have an unaffiliated third party review the evaluation performed under Requirement R8 and the security plan(s) developed under Requirement R9 in more than 120 calendar days.

	modifying the security plan(s) as specified in Part 10.3.		

VSL Justifications for CIP-014-4, Requirement R10	
FERC VSL G1 Violation Severity Level Assignments Should Not Have the Unintended Consequence of Lowering the Current Level of Compliance	This is an existing Requirement. The drafting team revised the VSL language for consistency with the proposed revisions to the standard. All of the violation severity levels stayed the same from the previously FERC-approved version
FERC VSL G2 Violation Severity Level Assignments Should Ensure Uniformity and Consistency in the Determination of Penalties Guideline 2a: The Single Violation Severity Level Assignment Category for "Binary" Requirements Is Not Consistent Guideline 2b: Violation Severity Level Assignments that Contain Ambiguous Language	The proposed VSLs are not binary and do not use any ambiguous terminology, thereby supporting uniformity and consistency in the determination of similar penalties for similar violations.
FERC VSL G3 Violation Severity Level Assignment Should Be Consistent with the Corresponding Requirement	The proposed VSLs use the same terminology as used in the associated requirement and are, therefore, consistent with the requirement.
FERC VSL G4 Violation Severity Level Assignment Should Be Based on A Single Violation, Not on A Cumulative	Each VSL is based on a single violation and not cumulative violations.

Number of Violations	

Reliability Standard Audit Worksheet[1]

CIP-014-4 – Physical Security

This section to be completed by the Compliance Enforcement Authority.

Audit ID:	Audit ID if available; or REG-NCRnnnnn-YYYYMMDD
Registered Entity:	Registered name of entity being audited
NCR Number:	NCR######
Compliance Enforcement Authority:	Region or NERC performing audit
Compliance Assessment Date(s)[2]:	Month DD, YYYY, to Month DD, YYYY
Compliance Monitoring Method:	[On-site Audit | Off-site Audit | Spot Check]
Names of Auditors:	Supplied by CEA

Applicability of Requirements

	BA	DP	GO	GOP	PA/PC	RC	RP	RSG	TO	TOP	TP	TSP
R1									X			
R2									X			
R3									X			
R4									X			
R5									X			
R6									X			
R7									X			
R8									X	X		
R9									X	X		
R10									X	X		

Legend:

Text with blue background:	Fixed text – do not edit
Text entry area with Green background:	Entity-supplied information
Text entry area with white background:	Auditor-supplied information

[1] NERC developed this Reliability Standard Audit Worksheet (RSAW) language in order to facilitate NERC's and the Regional Entities' assessment of a registered entity's compliance with this Reliability Standard. The NERC RSAW language is written to specific versions of each NERC Reliability Standard. Entities using this RSAW should choose the version of the RSAW applicable to the Reliability Standard being assessed. While the information included in this RSAW provides some of the methodology that NERC has elected to use to assess compliance with the requirements of the Reliability Standard, this document should not be treated as a substitute for the Reliability Standard or viewed as additional Reliability Standard requirements. In all cases, the Regional Entity should rely on the language contained in the Reliability Standard itself, and not on the language contained in this RSAW, to determine compliance with the Reliability Standard. NERC's Reliability Standards can be found on NERC's website. Additionally, NERC Reliability Standards are updated frequently, and this RSAW may not necessarily be updated with the same frequency. Therefore, it is imperative that entities treat this RSAW as a reference document only, and not as a substitute or replacement for the Reliability Standard. It is the responsibility of the registered entity to verify its compliance with the latest approved version of the Reliability Standards, by the applicable governmental authority, relevant to its registration status.

The NERC RSAW language contained within this document provides a non-exclusive list, for informational purposes only, of examples of the types of evidence a registered entity may produce or may be asked to produce to demonstrate compliance with the Reliability Standard. A registered entity's adherence to the examples contained within this RSAW does not necessarily constitute compliance with the applicable Reliability Standard, and NERC and the Regional Entity using this RSAW reserves the right to request additional evidence from the registered entity that is not included in this RSAW. Additionally, this RSAW includes excerpts from FERC Orders and other regulatory references. The FERC Order cites are provided for ease of reference only, and this document does not necessarily include all applicable Order provisions. In the event of a discrepancy between FERC Orders, and the language included in this document, FERC Orders shall prevail.

[2] Compliance Assessment Date(s): The date(s) the actual compliance assessment (on-site audit, off-site spot check, etc.) occurs.

Findings

(This section to be completed by the Compliance Enforcement Authority)

Req.	Finding	Summary and Documentation	Functions Monitored
R1			
R2			
R3			
R4			
R5			
R6			
R7			
R8			
R9			
R10			

Req.	Areas of Concern

Req.	Recommendations

Req.	Positive Observations

DRAFT

Subject Matter Experts

Identify the Subject Matter Expert(s) responsible for this Reliability Standard.

Registered Entity Response (Required; Insert additional rows if needed):

SME Name	Title	Organization	Requirement(s)

DRAFT

Note to Auditors Concerning Third Party Verifications and Reviews

Requirements R6 and R10 prescribe, respectively, unaffiliated third party verifications for Requirement R5 and unaffiliated third party reviews for Requirements R8 and R9. Auditors are encouraged to rely on the verifications and reviews performed in cases where the verifying or reviewing entities are qualified, unaffiliated with the audited entity, and the scope of their verification or review is clear. The concept of reliance means using the work of others to avoid duplication of efforts and is consistent with recognized professional auditing standards, which are required for Compliance Audits per NERC's Rules of Procedure. Reliance in the context of this Reliability Standard means using the Requirement R6 verifications and Requirement R10 reviews to reduce audit risk and the related rigor of audit testing for Requirements R5, R8, and R9. However, in cases where the verifying or reviewing entity lacks the qualifications specified in Requirement R6 for verifications, or Requirement R10 for reviewers, the required non-affiliation from the audited entity, or where the scope of the third-party entity's verification or review is unclear, auditors may need to apply audit testing of Requirements R5, R8, or R9. For this reason, the Evidence Requested and Compliance Assessment Approach Sections are still present in this RSAW for Requirements R5, R8, and R9. We anticipate those sections will also facilitate expectations for entities and their unaffiliated third-party verifiers and reviewers, assist Electric Reliability Organization (ERO) Enterprise auditors to understand the audit procedures applied by unaffiliated third party verifiers and reviewers, and provide transparency between ERO Enterprise auditors and Industry, should circumstances require audit testing of Requirements R5, R8, or R9. Further, it is an objective of the ERO Enterprise (collectively NERC and Regional Entities) to have transparent Evidence Requests and Compliance Assessment Approaches for every enforceable standard, whether they are in audit scope or not.

DRAFT

R1 Supporting Evidence and Documentation

R1. Each Transmission Owner shall, at least once every 36 calendar months, shall identify each applicable Transmission station and Transmission substation meeting any of the criteria in Attachment 1 that is either existing or planned to be in service within 36 calendar months.

M1. Examples of evidence may include, but are not limited to, dated written or electronic documentation of the Transmission station(s) and Transmission substation(s) (existing and those planned to be in service within 36 calendar months) that meet any of the criteria in Attachment 1.

Registered Entity Response (Required):

Compliance Narrative:

Provide a brief explanation, in your own words, of how you comply with this Requirement. References to supplied evidence, including links to the appropriate page, are recommended.

Evidence Requested[i]:

Provide the following evidence, or other evidence to demonstrate compliance.
(R1) List of existing Transmission stations/substations that meet any of the criteria in Attachment 1.
(R1) List of Transmission stations/substations planned in the next 36 calendar months that meet any of the criteria in Attachment 1.

Registered Entity Evidence (Required):

The following information is requested for each document submitted as evidence. Also, evidence submitted should be highlighted and bookmarked, as appropriate, to identify the exact location where evidence of compliance may be found.					
File Name	**Document Title**	**Revision or Version**	**Document Date**	**Relevant Page(s) or Section(s)**	**Description of Applicability of Document**

Audit Team Evidence Reviewed (This section to be completed by the Compliance Enforcement Authority):

Compliance Assessment Approach Specific to CIP-014-4, R1

This section to be completed by the Compliance Enforcement Authority

	(R1) Review entity's process for determining Transmission stations/substations subject to identification in accordance with Requirement R1, including the criteria described in Attachment 1.
	(R1) Verify entity's identification process includes existing Transmission stations/substations.

	(R1) Verify entity's identification process includes Transmission stations/substations planned in the next 36 calendar months.
	(R1) Review evidence that the identification was performed and verify that it occurred within the past 36 calendar months.
Note to Auditor:	

Auditor Notes:

DRAFT

R2 Supporting Evidence and Documentation

R2. Each Transmission Owner with applicable Transmission station(s) or Transmission substation(s) identified in Requirement R1 shall identify proximate existing Bulk Electric System Transmission station(s) and Bulk Electric System Transmission substation(s), irrespective of ownership, within 1500 feet or 457 meters (the shortest distance, measured substation fence line to substation fence line) of an applicable Transmission station or Transmission substation identified in Requirement R1.

M2. Examples of evidence may include, but are not limited to, dated written or electronic documentation of the Bulk Electric System Transmission stations or Bulk Electric System Transmission substations identified in Requirement R2.

Registered Entity Response (Required):

Compliance Narrative:

Provide a brief explanation, in your own words, of how you comply with this Requirement. References to supplied evidence, including links to the appropriate page, are recommended.

Evidence Requested[i]:

Provide the following evidence, or other evidence to demonstrate compliance.
(R2) Dated list of proximate existing Bulk Electric System Transmission station(s), irrespective of ownership, within 1500 feet or 457 meters of an applicable Transmission station or Transmission substation identified in Requirement R1.

Registered Entity Evidence (Required):

The following information is requested for each document submitted as evidence. Also, evidence submitted should be highlighted and bookmarked, as appropriate, to identify the exact location where evidence of compliance may be found.

File Name	Document Title	Revision or Version	Document Date	Relevant Page(s) or Section(s)	Description of Applicability of Document

Audit Team Evidence Reviewed (This section to be completed by the Compliance Enforcement Authority):

Compliance Assessment Approach Specific to CIP-014-4, R2

This section to be completed by the Compliance Enforcement Authority

	(R2) Review entity's process for determining proximate Bulk Electric System Transmission station(s) and substation(s) located within 1500 feet or 457m of an applicable Transmission station or Transmission

	substation identified in Requirement R1.
	(R2) Verify entity's process includes Bulk Electric System Transmission station(s) and substation(s) are identified irrespective of ownership.
	(R2) Verify entity's process includes measuring the shortest distance, measured substation fence line to substation fence line.
Note to Auditor:	

Auditor Notes:

DRAFT

R3 Supporting Evidence and Documentation

R3. Each Transmission Owner shall have a documented risk assessment methodology for evaluating the loss of each applicable Transmission station or Transmission substation identified in Requirement R1. The methodology shall include, at a minimum, the following:

3.1. Documented criteria for assessing instability, uncontrolled separation, or Cascading within an Interconnection. The criteria shall include, at a minimum, technically justified thresholds identifying unacceptable generation and load loss within an Interconnection.

3.2. A provision that steady-state and dynamic simulations shall each be performed using at a minimum one System peak Load case and one System Off-Peak Load case.

3.3. Specifications for simulations at each applicable Transmission station or Transmission substation identified in accordance with Requirement R1 and, if applicable, at each associated proximate existing Bulk Electric System Transmission station(s) and Bulk Electric System Transmission substation(s) identified in accordance with Requirement R2, that include:

3.3.1. At the applicable Transmission station or Transmission substation:

3.3.1.1. Prior loss of communication and Protection Systems;

3.3.1.2. Application of a Fault or Faults; and

3.3.1.3. Delayed (remote) clearing times shall be used unless otherwise technically substantiated.

3.3.2. At each proximate existing Bulk Electric System Transmission station(s) and Bulk Electric System Transmission substation(s), as applicable:

3.3.2.1. Application of a Fault or Faults, either simultaneous with or following the Fault or Faults applied under Part 3.3.1.2; and

3.3.2.2. Normal clearing times shall be used unless otherwise technically substantiated.

3.3.3. A documented justification for the Fault(s) associated with physical attack to be simulated. A single justification may be used for multiple locations. The justification shall include at a minimum:

3.3.3.1. The type of credible high-severity physical attack considered; and

3.3.3.2. The type of Fault(s) selected based upon the attack considered.

3.3.4. Removal of all Elements that Protection Systems and other controls are expected to automatically disconnect.

3.3.5. Actual or more conservative clearing times shall be used.

M3. Each Transmission Owner shall provide dated evidence, such as electronic or hard copies, of a risk assessment methodology satisfying Requirement R3.

DRAFT

Registered Entity Response (Required):

Compliance Narrative:

Provide a brief explanation, in your own words, of how you comply with this Requirement. References to supplied evidence, including links to the appropriate page, are recommended.

Evidence Requested[i]:

Provide the following evidence, or other evidence to demonstrate compliance.
(R3) Provide a dated risk assessment methodology which includes, at a minimum, the requirements of Requirement R3.

Registered Entity Evidence (Required):

The following information is requested for each document submitted as evidence. Also, evidence submitted should be highlighted and bookmarked, as appropriate, to identify the exact location where evidence of compliance may be found.					
File Name	**Document Title**	**Revision or Version**	**Document Date**	**Relevant Page(s) or Section(s)**	**Description of Applicability of Document**

Audit Team Evidence Reviewed (This section to be completed by the Compliance Enforcement Authority):

Compliance Assessment Approach Specific to CIP-014-4, R3

This section to be completed by the Compliance Enforcement Authority

	(R3) Verify entity has a documented risk assessment methodology for evaluating the loss of each applicable Transmission station or Transmission substation identified in Requirement R1.
	(R3 Part 3.1) Verify the entity's risk assessment methodology includes criteria for assessing instability, uncontrolled separation, or Cascading within an Interconnection. This should include thresholds identifying unacceptable generation and load loss within an Interconnection.
	(R3 Part 3.2) Verify the entity's risk assessment methodology includes a provision to perform steady-state and dynamic studies for a minimum of one System peak Load case and one System Off-Peak Load case.
	(R3 Part 3.3) Verify entity documented specifications for simulations at each applicable Transmission station or Transmission substation identified in Requirement R1.
	(R3 Part 3.3) If applicable, verify entity documented specifications for simulations at each associated proximate existing Bulk Electric System Transmissions station(s) and substation(s) identified in Requirement R2.
	Verify entity specifications for simulations at applicable Transmission stations or substations include prior

	loss of communication and Protection Systems (R3 Part 3.3.1.1), application of a Fault or Faults (R3 Part 3.3.1.2), and delayed (remote) clearing times were used unless otherwise technically substantiated (R3 Part 3.3.1.3).
	If applicable, verify entity specifications for simulations at each proximate existing Bulk Electric System Transmission station(s) or substation(s) include application of a Fault or Faults, either simultaneous with or following the Fault or Faults applied under Part 3.3.1.2 (R3 Part 3.3.2.1), and normal clearing times are used unless otherwise technically substantiated (R3 Part 3.3.2.2).
	(R3 Part 3.3.3) Verify the entity's risk assessment methodology includes documenting justification for the Fault(s) associated with the physical attack that was simulated. Justifications should include the type of credible high-severity physical attack considered, and the type of Fault(s) selected based on the attack considered. A single justification may be used for multiple locations.
	(R3 Part 3.3.4) Verify the entity's risk assessment methodology specifications for simulation(s) includes removal of all Elements that Protection Systems and other controls expected to automatically disconnect.
	(R3 Part 3.3.5) Verify the entity's risk assessment methodology specifications for simulation(s) includes using actual or more conservative clearing times.
Note to Auditor:	

Auditor Notes:

R4 Supporting Evidence and Documentation

R4. Each Transmission Owner with applicable Transmission station(s) and Transmission substation(s) identified in Requirement R1 jointly owned by multiple Transmission Owners shall coordinate with each appropriate Transmission Owner(s) to determine and document their individual and joint responsibilities under Requirement R3 and Requirement R5.

M4. Examples of acceptable evidence may include, but are not limited to, dated documentation, such as meeting minutes, agreements, and email correspondence, that identifies that agreement has been reached on individual and joint responsibilities for performing the required risk assessments.

Registered Entity Response (Required):

Compliance Narrative:

Provide a brief explanation, in your own words, of how you comply with this Requirement. References to supplied evidence, including links to the appropriate page, are recommended.

Evidence Requested[i]:

Provide the following evidence, or other evidence to demonstrate compliance.
(R4) For applicable jointly owned Transmission station(s) and Transmission substation(s) identified in R1, dated evidence (e.g., meeting minutes, agreements, emails, etc.) of coordination to determine and document individual and joint responsibilities for Requirement R3 and Requirement R5.

Registered Entity Evidence (Required):

The following information is requested for each document submitted as evidence. Also, evidence submitted should be highlighted and bookmarked, as appropriate, to identify the exact location where evidence of compliance may be found.					
File Name	**Document Title**	**Revision or Version**	**Document Date**	**Relevant Page(s) or Section(s)**	**Description of Applicability of Document**

Audit Team Evidence Reviewed (This section to be completed by the Compliance Enforcement Authority):

Compliance Assessment Approach Specific to CIP-014-4, R4

This section to be completed by the Compliance Enforcement Authority

	(R4) Verify the entity documented evidence of agreements made with Transmission Owners of jointly owned Transmission station(s) and Transmission substation(s) identified in R1 and documents individual and joint responsibilities for Requirement R3 and Requirement R5.

Note to Auditor:

Auditor Notes:

DRAFT

R5 Supporting Evidence and Documentation

R5. At least once every 36 calendar months, each Transmission Owner shall perform a risk assessment to identify applicable Transmission station(s) and Transmission substation(s) identified in Requirement R1, that if rendered inoperable or damaged could result in instability, uncontrolled separation, or Cascading within an Interconnection, using the methodology established in Requirement R3. Jointly owned Transmission station(s) and Transmission substation(s) shall be assessed according to the responsibilities documented under Requirement R4. If proximate Bulk Electric System Transmission station(s) and Bulk Electric System Transmission substation(s) were identified in Requirement R2, they shall be included in the risk assessment according to Requirement R3, Part 3.3.

5.1. If during a risk assessment, a Transmission station or Transmission substation is identified in either the dynamic or steady-state simulation as causing instability, uncontrolled separation, or Cascading within an Interconnection when rendered inoperable or damaged, then no further simulation is required.

5.2. If a previous risk assessment has identified a Transmission station or Transmission substation as causing instability, uncontrolled separation, or Cascading within an Interconnection when rendered inoperable or damaged, then the Transmission Owner may forgo additional assessments on that Transmission station or Transmission substation. Requirement R5, Part 5.3 and Requirement R7 through Requirement R10 still apply to that Transmission station or Transmission substation until a new risk assessment demonstrates otherwise.

5.3. The Transmission Owner shall identify the primary control center that operationally controls each Transmission station or Transmission substation identified as causing instability, uncontrolled separation, or Cascading within an Interconnection when rendered inoperable or damaged in the Requirement R5 risk assessment.

M5. Examples of acceptable evidence may include, but are not limited to, dated written or electronic documentation of the risk assessment satisfying Requirement R5 including the identified Transmission station(s) or Transmission substation(s). For Requirement R5, Part 5.3, examples of acceptable evidence may include, but are not limited to, dated written or electronic documentation of the identification of the primary control center that operationally controls each identified Transmission station or Transmission substation.

Registered Entity Response (Required):

Compliance Narrative:

Provide a brief explanation, in your own words, of how you comply with this Requirement. References to supplied evidence, including links to the appropriate page, are recommended.

Evidence Requested[i]:

Provide the following evidence, or other evidence to demonstrate compliance.
(R5) Dated written or electronic documentation of the current and immediately preceding risk assessment performed.
(R5 Part 5.1) Dated documentation identifying Transmission station(s) or Transmission substation(s) as causing

instability, uncontrolled separation, or Cascading if rendered inoperable or damaged in either dynamic or steady-state simulation.
(R5 Part 5.2) Dated documentation that a previous risk assessment identified Transmission station(s) or Transmission substation(s) as causing instability, uncontrolled separation, or Cascading if rendered inoperable or damaged.
(R5 Part 5.3) Dated documentation identifying the primary control center that operationally controls each Transmission station or Transmission substation identified as causing instability, uncontrolled separation, or Cascading if rendered inoperable or damaged.

Registered Entity Evidence (Required):

The following information is requested for each document submitted as evidence. Also, evidence submitted should be highlighted and bookmarked, as appropriate, to identify the exact location where evidence of compliance may be found.

File Name	Document Title	Revision or Version	Document Date	Relevant Page(s) or Section(s)	Description of Applicability of Document

Audit Team Evidence Reviewed (This section to be completed by the Compliance Enforcement Authority):

Compliance Assessment Approach Specific to CIP-014-4, R5

This section to be completed by the Compliance Enforcement Authority

	(R5) Verify the entity performed a risk assessment at least once every 36 calendar months using the methodology established in Requirement R3 to identify applicable Transmission station(s) and Transmission substation(s) identified in Requirement R1, that if rendered inoperable or damaged could result in instability, uncontrolled separation, or Cascading.
	(R5) Verify jointly owned Transmission station(s) and Transmission substation(s), if any, were assessed according to the responsibilities documented under Requirement R4.
	(R5) Verify proximate Bulk Electric System Transmission station(s) and Bulk Electric System Transmission substation(s) identified in R2, if any, were included in the risk assessment according to Requirement R3, Part 3.3.
	(R5 Part 5.1) Verify the entity identified Transmission station(s) and Transmission substation(s) causing instability, uncontrolled separation, or Cascading when rendered inoperable or damaged in either dynamic or steady-state simulation during a risk assessment.
	(R5 Part 5.2) Verify the entity identified Transmission station(s) or Transmission substation(s) from previous risk assessments as causing instability, uncontrolled separation, or Cascading when rendered inoperable or damaged to forgo additional assessments, if any.
	(R5 Part 5.3) Verify the entity identified primary control center(s) that operationally control each

	Transmission station or Transmission substation identified as causing instability, uncontrolled separation, or Cascading within an Interconnection when rendered inoperable or damaged in the Requirement R5 risk assessment.

Note to Auditor:
If any previous risk assessments were used to forgo additional assessments on Transmission station(s) and Transmission substation(s) using the Requirement R3 risk assessment methodology, the Transmission station(s) and Transmission substation(s) will apply to Requirement R5, Part 5.3, and Requirements R7 through R10 until a new risk assessment demonstrates otherwise.

Auditor Notes:

DRAFT

R6 Supporting Evidence and Documentation

R6. Each Transmission Owner shall have an unaffiliated third party verify the risk assessment performed under Requirement R5. The verification may occur concurrently with or after the risk assessment performed under Requirement R5.

6.1. Each Transmission Owner shall select an unaffiliated verifying entity that is either

- A registered Planning Coordinator, Transmission Planner, or Reliability Coordinator; or
- An entity that has transmission planning or analysis experience.

6.2. The unaffiliated third-party verification shall verify the Transmission Owner's risk assessment performed under Requirement R5, which may include recommendations for the addition or deletion of a Transmission station(s) or Transmission substation(s). The Transmission Owner shall ensure the verification is completed within 90 calendar days following the completion of the Requirement R5 risk assessment.

6.3. If the unaffiliated verifying entity recommends that the Transmission Owner add a Transmission station(s) or Transmission substation(s) to, or remove a Transmission station or Transmission substation from, its identification under Requirement R5, the Transmission Owner shall either, within 60 calendar days of completion of the verification, for each recommended addition or removal of a Transmission station or Transmission substation:

- Modify its identification under Requirement R5 consistent with the recommendation; or
- Document the technical basis for not modifying the identification in accordance with the recommendation.

6.4. Each Transmission Owner shall implement procedures, such as the use of nondisclosure agreements, for protecting sensitive or confidential information made available to the unaffiliated third-party verifier and to protect or exempt sensitive or confidential information developed pursuant to this Reliability Standard from public disclosure.

M6. Examples of acceptable evidence may include, but are not limited to, dated written or electronic documentation that the Transmission Owner completed an unaffiliated third party verification of the Requirement R5 risk assessment and satisfied all of the applicable provisions of Requirement R6, including, if applicable, documenting the technical basis for not modifying the identification in Requirements R1, R2, R3, R4, and R5 as specified under Part 6.3. Additionally, examples of evidence may include, but are not limited to, written or electronic documentation of procedures to protect information under Part 6.4.

Registered Entity Response (Required):

Compliance Narrative:

Provide a brief explanation, in your own words of how you comply with this Requirement. References to supplied evidence, including links to the appropriate page, are recommended.

Evidence Requested[i]:

Provide the following evidence, or other evidence to demonstrate compliance.
(R6) Dated evidence of unaffiliated third-party verification of the entity's risk assessment performed under Requirement R5.
(R6 Part 6.1) Documented qualifications of the verifying party.
(R6 Part 6.3) Recommendations, if any, of the verifying party related to Requirement R5 risk assessments.
(R6 Part 6.3) Documentation of modifications and implementation of recommendations or technical basis for not implementing recommendations of the verifying party.
(R6 Part 6.4) Evidence that procedures were implemented to protect sensitive and confidential information.

Registered Entity Evidence (Required):

The following information is requested for each document submitted as evidence. Also, evidence submitted should be highlighted and bookmarked, as appropriate, to identify the exact location where evidence of compliance may be found.					
File Name	**Document Title**	**Revision or Version**	**Document Date**	**Relevant Page(s) or Section(s)**	**Description of Applicability of Document**

Audit Team Evidence Reviewed (This section to be completed by the Compliance Enforcement Authority):

Compliance Assessment Approach Specific to CIP-014-4, R6

This section to be completed by the Compliance Enforcement Authority

	(R6) Review evidence of third-party verification of the entity's risk assessment and verify the following:
	(R6 Part 6.1) The reviewing entity is registered in accordance with Requirement R6.1 or has transmission planning or analysis experience.
	(R6 Part 6.2) Verification was performed within 90 calendar days of the completion of the Requirement R5 risk assessment.
	(R6 Part 6.3) If the unaffiliated verifying entity provided any recommendations, the entity, within 60 days of the completion of the verification, either documented modifications and implementation of recommendations or documented a technical basis for not implementing recommendations of the verifying party.
	(R6 Part 6.4) Review non-disclosure agreement (or other evidence) to verify procedures for protecting sensitive or confidential information between the entity and third-party were implemented.
Note to Auditor: The third-party verification may occur concurrently with or after the risk assessment performed under Requirement R5.	

Auditor Notes:

DRAFT

R7 Supporting Evidence and Documentation

R7. For a primary control center(s) identified by the Transmission Owner according to Requirement R5, Part 5.3 that a) operationally controls an identified Transmission station or Transmission substation verified according to Requirement R6, and b) is not under the operational control of the Transmission Owner: the Transmission Owner shall, within seven calendar days following completion of Requirement R6, notify the Transmission Operator that has operational control of the primary control center of such identification and the date of completion of Requirement R6.

7.1. If a Transmission station or Transmission substation previously identified under Requirements R1 and R5 and verified according to Requirement R6 is removed from the identification during a subsequent risk assessment performed according to Requirement R5 or a verification according to Requirement R6, then the Transmission Owner shall, within seven calendar days following the verification or the subsequent risk assessment, notify the Transmission Operator that has operational control of the primary control center of the removal.

M7. Examples of acceptable evidence may include, but are not limited to, written or electronic notifications or communications that the Transmission Owner notified each Transmission Operator, as applicable, according to Requirement R7.

Registered Entity Response (Required):

Question: Are there any primary control centers identified in Requirement R5, Part 5.3 that are not under operational control of your NERC registration? ☐ Yes ☐ No

If "Yes," provide details below.

Registered Entity Response (Required):

Compliance Narrative:

Provide a brief explanation, in your own words of how you comply with this Requirement. References to supplied evidence, including links to the appropriate page, are recommended.

Evidence Requested[i]:

Provide the following evidence, or other evidence to demonstrate compliance.
(R7) If applicable, dated communications with Transmission Operators demonstrating notification and the date of completion of Requirement R6.

Registered Entity Evidence (Required):

The following information is requested for each document submitted as evidence. Also, evidence submitted should be highlighted and bookmarked, as appropriate, to identify the exact location where evidence of compliance may be found.

File Name	Document Title	Revision or Version	Document Date	Relevant Page(s) or Section(s)	Description of Applicability of Document

Audit Team Evidence Reviewed (This section to be completed by the Compliance Enforcement Authority):

Compliance Assessment Approach Specific to CIP-014-4, R7

This section to be completed by the Compliance Enforcement Authority

	(R7) For each applicable primary control center identified in Requirement R5 Part 5.3 not under the control of the entity's registration, verify notification exists and contains the date of completion of Requirement R6, and ensure the responsible Transmission Operator was notified within seven calendar days of the completion of R2.
	(R7 Part 7.1) For each Transmission station/substation removed under Part 7.1, ensure the responsible Transmission Operator was notified of the removal within seven calendar days of removal from identification.
Note to Auditor: Note the entity's response to the above Question. If auditor can verify the entity's answer of 'No,' then Requirement R7 is not applicable, and no further audit testing is required.	

Auditor Notes:

R8 Supporting Evidence and Documentation

R8. Each Transmission Owner that identified a Transmission station, Transmission substation, or a primary control center in Requirement R5 and verified according to Requirement R6, and each Transmission Operator notified by a Transmission Owner according to Requirement R7, shall conduct an evaluation of the potential threats and vulnerabilities of a physical attack to each of their respective Transmission station(s), Transmission substation(s), and primary control center(s) identified in Requirement R5 and verified according to Requirement R6. The evaluation shall consider the following:

8.1. Unique characteristics of the identified and verified Transmission station(s), Transmission substation(s), and primary control center(s);

8.2. Prior history of attack(s) on similar facilities taking into account the frequency, geographic proximity, and severity of past physical security related events; and

8.3. Intelligence or threat warnings received from sources such as law enforcement, the Electric Reliability Organization (ERO), the Electricity Sector Information Sharing and Analysis Center (E-ISAC), U.S. federal and/or Canadian governmental agencies, or their successors.

M8. Examples of evidence may include, but are not limited to, dated written or electronic documentation that the Transmission Owner or Transmission Operator conducted an evaluation of the potential threats and vulnerabilities of a physical attack to their respective Transmission station(s), Transmission substation(s), and primary control center(s) as specified in Requirement R8.

Registered Entity Response (Required):

Compliance Narrative:

Provide a brief explanation, in your own words of how you comply with this Requirement. References to supplied evidence, including links to the appropriate page, are recommended.

Evidence Requested[i]:

Provide the following evidence, or other evidence to demonstrate compliance.
(R8) A description of the entity's process for executing the evaluation prescribed in Requirement R8.
(R8) Dated documentation that the Transmission Owner or Transmission Operator conducted an evaluation of the potential threats and vulnerabilities of a physical attack to their respective Transmission station(s), Transmission substation(s), and primary control center(s) as specified in Requirement R8.

Registered Entity Evidence (Required):

The following information is requested for each document submitted as evidence. Also, evidence submitted should be highlighted and bookmarked, as appropriate, to identify the exact location where evidence of compliance may be found.					
File Name	**Document Title**	**Revision or Version**	**Document Date**	**Relevant Page(s) or Section(s)**	**Description of Applicability of Document**

Audit Team Evidence Reviewed (This section to be completed by the Compliance Enforcement Authority):

Compliance Assessment Approach Specific to CIP-014-4, R8

This section to be completed by the Compliance Enforcement Authority

	(R8) Review evidence of evaluation and verify it considers the following:
	(R8) Potential threats and vulnerabilities as described in Requirement R8.
	(R8 Part 8.1) Unique characteristics as described in Requirement R8 Part 8.1.
	(R8 Part 8.2) Prior history of attack on similar facilities taking into account the frequency, geographic proximity, and severity of past physical security related events
	(R8 Part 8.3) Intelligence or warnings as described in Requirement R8 Part 8.3.
Note to Auditor: See above Note concerning Third Party Verifications for important details regarding audit risk assessment and related rigor of audit procedures to be applied for this Requirement. Auditor should cross reference the Transmission stations/substations and primary control centers identified in the risk assessment performed under Requirement R5 to the evaluation prescribed in Requirement R8 to ensure it is complete.	

Auditor Notes:

R9 Supporting Evidence and Documentation

R9. Each Transmission Owner that identified a Transmission station, Transmission substation, or primary control center in Requirement R5 and verified according to Requirement R6, and each Transmission Operator notified by a Transmission Owner according to Requirement R7, shall develop and implement a documented physical security plan(s) that covers their respective Transmission station(s), Transmission substation(s), and primary control center(s). The physical security plan(s) shall be developed within 120 calendar days following the completion of Requirement R6 and executed according to the timeline specified in the physical security plan(s). The physical security plan(s) shall include the following attributes:

9.1. Resiliency or security measures designed collectively to deter, detect, delay, assess, communicate, and respond to potential physical threats and vulnerabilities identified during the evaluation conducted in Requirement R8.

9.2. Law enforcement contact and coordination information.

9.3. A timeline for executing the physical security enhancements and modifications specified in the physical security plan.

9.4. Provisions to evaluate evolving physical threats, and their corresponding security measures, to the Transmission station(s), Transmission substation(s), or primary control center(s).

M9. Examples of evidence may include, but are not limited to, dated written or electronic documentation of its physical security plan(s) that covers their respective identified and verified Transmission station(s), Transmission substation(s), and primary control center(s) as specified in Requirement R6, and additional evidence demonstrating execution of the physical security plan according to the timeline specified in the physical security plan.

Registered Entity Response (Required):

Compliance Narrative:

Provide a brief explanation, in your own words of how you comply with this Requirement. References to supplied evidence, including links to the appropriate page, are recommended.

Evidence Requested[i]:

Provide the following evidence, or other evidence to demonstrate compliance.
(R9) Dated physical security plan(s).

Registered Entity Evidence (Required):

The following information is requested for each document submitted as evidence. Also, evidence submitted should be highlighted and bookmarked, as appropriate, to identify the exact location where evidence of compliance may be found.					
File Name	**Document Title**	**Revision or Version**	**Document Date**	**Relevant Page(s)**	**Description of Applicability of Document**

				or Section(s)	

Audit Team Evidence Reviewed (This section to be completed by the Compliance Enforcement Authority):

Compliance Assessment Approach Specific to CIP-014-4, R9

This section to be completed by the Compliance Enforcement Authority

Note to Auditor:	
	(R9) Review evidence and verify the physical security plan(s) covers the Transmission stations/substations and primary controls identified in Requirements R5 and/or R6, and verify plan was developed within 120 calendar days following the completion of Requirement R6 and executed according to the timeline specified in the physical security plan(s). In addition, verify the plan includes the following attributes:
	(R9 Part 9.1) Resiliency or security measures designed collectively to deter, detect, delay, assess, communicate, and respond to potential physical threats and vulnerabilities identified during the evaluation conducted in Requirement R8.
	(R9 Part 9.2) Law enforcement contact and coordination information.
	(R9 Part 9.3) A timeline for executing physical security enhancements and modifications specified in the physical security plan.
	(R9 Part 9.4) Provisions to evaluate evolving physical threats, and their corresponding security measures in accordance with Requirement R9 Part 9.4.
	(R9) Verify implementation of physical security plan(s). See 'Note to Auditor' for details

Note to Auditor: See above Note concerning Third Party Verifications for important details regarding audit risk assessment and related rigor of audit procedures to be applied for this Requirement.

Auditor should cross reference the Transmission stations/substations and primary control centers identified in the risk assessment performed under Requirement R5 to the evaluation prescribed in Requirement R8 and the security plan(s) prescribed in Requirement R9 to ensure the plan addresses vulnerabilities to physical attacks per the evaluation conducted in Requirement R8.

Requirement R9 includes implementation of the security plan(s), which is not within the scope of the third-party review described in Requirement R10. Auditors can gain reasonable assurance security plan(s) was/were implemented by determining if specific actions prescribed by the plan(s) have taken place within the timelines established by the plan(s). For example, if the plan calls for certain procedures to occur, then auditors could ask for evidence demonstrating that the procedure has been implemented within the timeline established in the security plan. Also, if the plan calls for construction of a barrier, an auditor could verify evidence that such a barrier was constructed in accordance with the entity's timeline. As auditors should obtain reasonable, not absolute, assurance the plan(s) was/were implemented, testing implementation on a

sample basis may be appropriate.

Auditor Notes:

DRAFT

R10 Supporting Evidence and Documentation

R10. Each Transmission Owner that identified a Transmission station, Transmission substation, or primary control center in Requirement R5 and verified according to Requirement R6, and each Transmission Operator notified by a Transmission Owner according to Requirement R7, shall have an unaffiliated third party review the evaluation performed under Requirement R8 and the security plan(s) developed under Requirement R9. The review may occur concurrently with or after completion of the evaluation performed under Requirement R8 and the security plan development under Requirement R9.

10.1. Each Transmission Owner and Transmission Operator shall select an unaffiliated third-party reviewer from the following:

- An entity or organization with electric industry physical security experience and whose review staff has at least one member who holds either a Certified Protection Professional (CPP) or Physical Security Professional (PSP) certification;
- An entity or organization approved by the ERO;
- A governmental agency with physical security expertise; or
- An entity or organization with demonstrated law enforcement, government, or military physical security expertise.

10.2. The Transmission Owner or Transmission Operator, respectively, shall ensure that the unaffiliated third-party review is completed within 90 calendar days of completing the security plan(s) developed in Requirement R9. The unaffiliated third-party review may, but is not required to, include recommended changes to the evaluation performed under Requirement R8 or the security plan(s) developed under Requirement R9.

10.3. If the unaffiliated third-party reviewer recommends changes to the evaluation performed under Requirement R8 or security plan(s) developed under Requirement R9, the Transmission Owner or Transmission Operator shall, within 60 calendar days of the completion of the unaffiliated third party review, for each recommendation:

- Modify its evaluation or security plan(s) consistent with the recommendation; or
- Document the reason(s) for not modifying the evaluation or security plan(s) consistent with the recommendation.

10.4. Each Transmission Owner and Transmission Operator shall implement procedures, such as the use of non-disclosure agreements, for protecting sensitive or confidential information made available to the unaffiliated third-party reviewer and to protect or exempt sensitive or confidential information developed pursuant to this Reliability Standard from public disclosure.

M10. Examples of evidence may include, but are not limited to, written or electronic documentation that the Transmission Owner or Transmission Operator had an unaffiliated third party review the evaluation performed under Requirement R8 and the security plan(s) developed under Requirement R9 as specified in Requirement R10 including, if applicable, documenting the reasons for not modifying the evaluation or security plan(s) in accordance with a recommendation under Part 10.3. Additionally,

examples of evidence may include, but are not limited to, written or electronic documentation of procedures to protect information under Part 10.4.

Registered Entity Response (Required):

Compliance Narrative:

Provide a brief explanation, in your own words of how you comply with this Requirement. References to supplied evidence, including links to the appropriate page, are recommended.

Evidence Requested[i]:

Provide the following evidence, or other evidence to demonstrate compliance.
(R10) Dated Evidence of unaffiliated third-party review of entity's Requirement R8 evaluation and Requirement R9 security plan(s).
(R10 Part 10.1) Evidence that reviewing entity staff meets qualifications identified in Part 10.1.
(R10 Part 10.3) Recommendations of third-party reviewer related to Requirement R8 evaluation and Requirement R9 security plan.
(R10 Part 10.3) Dated documentation of modifications and implementation of recommendations or reasons and compensating mitigating measures for not implementing recommendations of the third-party reviewer.
(R10 Part 10.4) Evidence that procedures were implemented to protect sensitive and confidential information.

Registered Entity Evidence (Required):

The following information is requested for each document submitted as evidence. Also, evidence submitted should be highlighted and bookmarked, as appropriate, to identify the exact location where evidence of compliance may be found.					
File Name	**Document Title**	**Revision or Version**	**Document Date**	**Relevant Page(s) or Section(s)**	**Description of Applicability of Document**

Audit Team Evidence Reviewed (This section to be completed by the Compliance Enforcement Authority):

Compliance Assessment Approach Specific to CIP-014-4, R10

This section to be completed by the Compliance Enforcement Authority

	(R10) Review evidence and verify the physical security plan(s) and the Requirement R8 evaluation have been reviewed by an unaffiliated third party. Also, review evidence and verify the following:
	(R10 Part 10.1) Reviewing party has the qualifications identified in Part 10.1.
	(R10 Part 10.2) Review is dated within 90 calendar days of completion of the Requirement R9 security

	plan.
	(R10 Part 10.3) Reviewing entity recommended changes to security plan(s) were made by entity or the reason(s) for not making the change(s) was/were documented within 60 calendar days of the completion of the unaffiliated third-party review.
	(R10 Part 10.4) Review non-disclosure agreement (or other evidence) to verify procedures for protecting sensitive or confidential information between the entity and third party were implemented.
Note to Auditor: The third-party review may occur concurrently with or after the evaluation performed under Requirement R8 or the security plan develop under Requirement R9.	

Auditor Notes:

DRAFT

Additional Information

The full text of CIP-014-4 may be found on the NERC website (www.nerc.com) under "Standards", "Reliability Standards."

In addition to the Reliability Standard, the NERC webpage for the Reliability Standard will have a link to the applicable Implementation Plan.

In addition to the Reliability Standard, there is background information available on the NERC website. Capitalized terms in the Reliability Standard refer to terms in the NERC Glossary, which may be found on the NERC website.

Sampling Methodology

Sampling is essential for auditing compliance with NERC Reliability Standards since it is not always possible or practical to test 100% of either the equipment, documentation, or both, associated with the full suite of enforceable standards. The Sampling Methodology Guidelines and Criteria (see NERC website), or sample guidelines provided by the ERO help to establish a minimum sample set for monitoring and enforcement uses in audits of NERC Reliability Standards.

Regulatory Language

See FERC Docket No. RD23-2-000.

Revision History for RSAW

Version	Date	Reviewers	Revision Description
1	05/27/2026	NERC Compliance Assurance	Initial Draft

[i] Items in the Evidence Requested section are suggested evidence that may but will not necessarily, demonstrate compliance. These items are not mandatory and other forms and types of evidence may be submitted at the entity's discretion.

DRAFT

Standards Announcement

Project 2023-06 CIP-014 Risk Assessment Refinement

Final Ballot Open through June 8, 2026

Now Available

A final ballot for **2023-06 CIP-014 Risk Assessment Refinement** is open through **8 p.m. Eastern, Monday, June 8, 2026**.

Balloting

In the final ballot, votes are counted by exception. Votes from the previous ballot are automatically carried over in the final ballot. Only members of the applicable ballot pools can cast a vote. Ballot pool members who previously voted have the option to change their vote in the final ballot. Ballot pool members who did not cast a vote during the previous ballot can vote in the final ballot.

Members of the ballot pool(s) associated with this project can log into the Standards Balloting and Commenting System (SBS) and submit votes here.

- *Contact NERC IT support directly at https://support.nerc.net/ (Monday – Friday, 8 a.m. - 5 p.m. Eastern) for problems regarding accessing the SBS due to a forgotten password, incorrect credential error messages, or system lock-out.*
- *Passwords expire every **6 months** and must be reset.*
- *The SBS **is not** supported for use on mobile devices.*
- *Please be mindful of ballot and comment period closing dates. We ask to **allow at least 48 hours** for NERC support staff to assist with inquiries. Therefore, it is recommended that users try logging into their SBS accounts **prior to the last day** of a comment/ballot period.*

Next Steps

The voting results will be posted and announced after the ballots close. If approved, the standard will be submitted to the Board of Trustees for adoption and then filed with the appropriate regulatory authorities.

For more information on the Standards Development Process, refer to the Standard Processes Manual

For more information or assistance, please contact **Ben Wu via email or at 470-542-6882.**

BALLOT RESULTS

Ballot Name: Project 2023-06 CIP-014 Risk Assessment Refinement CIP-014-4 FN 5 ST
Voting Start Date: 5/28/2026 2:06:17 PM
Voting End Date: 6/8/2026 8:00:00 PM
Ballot Type: ST
Ballot Activity: FN
Ballot Series: 5
Total # Votes: 236
Total Ballot Pool: 293
Quorum: 80.55
Quorum Established Date: 5/28/2026 2:21:43 PM
Weighted Segment Value: 80.05

Segment	Ballot Pool	Segment Weight	Affirmative Votes	Affirmative Fraction	Negative Votes w/ Comment	Negative Fraction w/ Comment	Negative Votes w/o Comment	Abstain	No Vote
Segment: 1	85	1	48	0.762	15	0.238	0	9	13
Segment: 2	7	0	0	0	0	0	0	6	1
Segment: 3	67	1	41	0.82	9	0.18	0	4	13
Segment: 4	15	0.5	5	0.5	0	0	0	2	8
Segment: 5	66	1	36	0.783	10	0.217	0	6	14
Segment: 6	46	1	28	0.778	8	0.222	0	5	5
Segment: 7	0	0	0	0	0	0	0	0	0
Segment: 8	0	0	0	0	0	0	0	0	0
Segment: 9	0	0	0	0	0	0	0	0	0

© 2026 - NERC Ver 4.2.1.0 Machine Name: ATLVPEROWEB01

Segment	Ballot Pool	Segment Weight	Affirmative Votes	Affirmative Fraction	Negative Votes w/ Comment	Negative Fraction w/ Comment	Negative Votes w/o Comment	Abstain	No Vote
Segment: 10	7	0.3	2	0.2	1	0.1	0	1	3
Totals:	293	4.8	160	3.842	43	0.958	0	33	57

BALLOT POOL MEMBERS

Show All entries Search: Search

Segment	Organization	Voter	Designated Proxy	Ballot	NERC Memo
1	AEP - AEP Service Corporation	Dennis Sauriol		Affirmative	N/A
1	Allete - Minnesota Power, Inc.	Hillary Creurer	Lori Frisk	Affirmative	N/A
1	Ameren - Ameren Services	Tamara Evey		Affirmative	N/A
1	American Transmission Company, LLC	Amy Wilke		Affirmative	N/A
1	APS - Arizona Public Service Co.	Daniela Atanasovski		Affirmative	N/A
1	Arkansas Electric Cooperative Corporation	Lily Green		None	N/A
1	Associated Electric Cooperative, Inc.	Mark Riley		Affirmative	N/A
1	Austin Energy	Thomas Standifur		Affirmative	N/A
1	Balancing Authority of Northern California	Kevin Smith	Tim Kelley	None	N/A

© 2026 - NERC Ver 4.2.1.0 Machine Name: ATLVPEROWEB01

Segment	Organization	Voter	Designated Proxy	Ballot	NERC Memo
1	BC Hydro and Power Authority	Adrian Andreoiu		Abstain	N/A
1	Berkshire Hathaway Energy - MidAmerican Energy Co.	Thomas Breen		Affirmative	N/A
1	Black Hills Corporation	Trevor Rombough		Affirmative	N/A
1	Bonneville Power Administration	Mai Truong		Negative	N/A
1	CenterPoint Energy Houston Electric, LLC	Daniela Hammons		Affirmative	N/A
1	Central Iowa Power Cooperative	Kelly Heims		Affirmative	N/A
1	City Utilities of Springfield, Missouri	Michael Buyce		Affirmative	N/A
1	Colorado Springs Utilities	Corey Walker		Affirmative	N/A
1	Con Ed - Consolidated Edison Co. of New York	Anna Heiss		Affirmative	N/A
1	Dairyland Power Cooperative	Karrie Schuldt		Affirmative	N/A
1	Dominion - Dominion Virginia Power	Steven Belle		Affirmative	N/A
1	Duke Energy	Katherine Street		Affirmative	N/A
1	Edison International - Southern California Edison Company	Hayk Zargaryan		Affirmative	N/A
1	Entergy	Brian Lindsey		Affirmative	N/A
1	Evergy	Kevin Frick	Alan Kloster	Affirmative	N/A
1	Eversource Energy	Joshua London		Affirmative	N/A
1	Exelon	Daniel Gacek		Affirmative	N/A
1	FirstEnergy - FirstEnergy Corporation	Theresa Ciancio		Affirmative	N/A
1	Georgia Transmission Corporation	Greg Davis	Stephen Stafford	Affirmative	N/A

© 2026 - NERC Ver 4.2.1.0 Machine Name: ATLVPEROWEB01

Segment	Organization	Voter	Designated Proxy	Ballot	NERC Memo
1	Glencoe Light and Power Commission	Terry Volkmann		Affirmative	N/A
1	Great River Energy	Mark Peterson		None	N/A
1	Hydro One Networks, Inc.	Aditya Menon	Oshara Narangoda	Negative	N/A
1	Hydro-Quebec (HQ)	Nicolas Turcotte	Chantal Mazza	Affirmative	N/A
1	IDACORP - Idaho Power Company	Sean Steffensen		Abstain	N/A
1	Imperial Irrigation District	Jesus Sammy Alcaraz	Denise Sanchez	Affirmative	N/A
1	International Transmission Company Holdings Corporation	Michael Moltane	Gail Elliott	Negative	N/A
1	Lakeland Electric	Larry Watt		None	N/A
1	Lincoln Electric System	Josh Johnson		Affirmative	N/A
1	Long Island Power Authority	Isidoro Behar		Affirmative	N/A
1	Los Angeles Department of Water and Power	Jonathon Flores		None	N/A
1	Lower Colorado River Authority	Nathan Browder		Affirmative	N/A
1	M and A Electric Power Cooperative	William Price		Affirmative	N/A
1	Manitoba Hydro	Nazra Gladu		Negative	N/A
1	Minnkota Power Cooperative Inc.	Theresa Allard	Nikki Carson-Marquis	Negative	N/A
1	Muscatine Power and Water	Andrew Kurriger		Affirmative	N/A
1	N.W. Electric Power Cooperative, Inc.	Mark Ramsey		Affirmative	N/A
1	National Grid USA	Jacqueline Ryan		Affirmative	N/A
1	NB Power Corporation	Jeffrey Streifling		Affirmative	N/A
1	Nebraska Public Power District	Jamison Cawley		Affirmative	N/A

© 2026 - NERC Ver 4.2.1.0 Machine Name: ATLVPEROWEB01

Segment	Organization	Voter	Designated Proxy	Ballot	NERC Memo
1	Network and Security Technologies	Nick Lauriat		Abstain	N/A
1	New York Power Authority	Daniel Valle		Negative	N/A
1	NextEra Energy - Florida Power and Light Co.	Silvia Mitchell		Affirmative	N/A
1	NiSource - Northern Indiana Public Service Co.	Alison Nickells		Negative	N/A
1	Northeast Missouri Electric Power Cooperative	Brett Douglas		Affirmative	N/A
1	OGE Energy - Oklahoma Gas and Electric Co.	Terri Pyle		Affirmative	N/A
1	Oncor Electric Delivery	Byron Booker	Lucinda Bradshaw	None	N/A
1	OTP - Otter Tail Power Company	Charles Wicklund		Affirmative	N/A
1	Pacific Gas and Electric Company	Marco Rios	Bob Cardle	Negative	N/A
1	Pedernales Electric Cooperative, Inc.	Bradley Collard		Abstain	N/A
1	Platte River Power Authority	Marissa Archie		Affirmative	N/A
1	Portland General Electric Co.	Brooke Jockin		Abstain	N/A
1	PPL Electric Utilities Corporation	Michelle McCartney Longo		Affirmative	N/A
1	PSEG - Public Service Electric and Gas Co.	Karen Arnold		None	N/A
1	Public Utility District No. 1 of Chelan County	Maggie Bravo		Negative	N/A
1	Public Utility District No. 1 of Snohomish County	Alyssia Rhoads		Negative	N/A
1	Public Utility District No. 2 of Grant County, Washington	Joanne Anderson		Abstain	N/A

© 2026 - NERC Ver 4.2.1.0 Machine Name: ATLVPEROWEB01

Segment	Organization	Voter	Designated Proxy	Ballot	NERC Memo
1	Sacramento Municipal Utility District	Wei Shao	Tim Kelley	None	N/A
1	Salt River Project	Laura Somak	Timothy Singh	Negative	N/A
1	Santee Cooper	Franklin Settle		Abstain	N/A
1	SaskPower	Wayne Guttormson		Abstain	N/A
1	Seattle City Light	Michael Jang		Affirmative	N/A
1	Seminole Electric Cooperative, Inc.	Khang Le		Negative	N/A
1	Sempra - San Diego Gas and Electric	Mo Derbas		Negative	N/A
1	Sho-Me Power Electric Cooperative	Oskar Olson		None	N/A
1	Southern Company - Southern Company Services, Inc.	Matt Carden		Affirmative	N/A
1	Southwestern Power Administration	Angela Wheat		Abstain	N/A
1	Sunflower Electric Power Corporation	Paul Mehlhaff		None	N/A
1	Tacoma Public Utilities (Tacoma, WA)	John Merrell	Jennie Wike	Negative	N/A
1	Tallahassee Electric (City of Tallahassee, FL)	Scott Langston		Affirmative	N/A
1	Tennessee Valley Authority	David Plumb		Affirmative	N/A
1	Tri-State G and T Association, Inc.	Donna Wood		None	N/A
1	U.S. Bureau of Reclamation	Phillip Martinez		Affirmative	N/A
1	Unisource - Tucson Electric Power Co.	Jessica Cordero		Affirmative	N/A
1	VELCO -Vermont Electric Power Company, Inc.	Randall Buswell		None	N/A

© 2026 - NERC Ver 4.2.1.0 Machine Name: ATLVPEROWEB01

Segment	Organization	Voter	Designated Proxy	Ballot	NERC Memo
1	Western Area Power Administration	Kevin Chesley		None	N/A
1	Xcel Energy, Inc.	Eric Barry		Negative	N/A
2	California ISO	Filipe Coelho		Abstain	N/A
2	Electric Reliability Council of Texas, Inc.	Kennedy Meier		Abstain	N/A
2	ISO New England, Inc.	John Pearson		Abstain	N/A
2	Midcontinent ISO, Inc.	Kirsten Rowley		Abstain	N/A
2	New York Independent System Operator	Gregory Campoli		None	N/A
2	PJM Interconnection, L.L.C.	Thomas Foster	Elizabeth Davis	Abstain	N/A
2	Southwest Power Pool, Inc. (RTO)	Joshua Phillips	Mia Wilson	Abstain	N/A
3	AEP	Jodi Yeary		Affirmative	N/A
3	Ameren - Ameren Services	David Jendras Sr	Nick Leathers	Affirmative	N/A
3	APS - Arizona Public Service Co.	Jessica Lopez		Affirmative	N/A
3	Arkansas Electric Cooperative Corporation	Ayslynn Mcavoy		Abstain	N/A
3	Associated Electric Cooperative, Inc.	Todd Bennett		Affirmative	N/A
3	Austin Energy	Lovita Griffin		None	N/A
3	Avista - Avista Corporation	Robert Follini		None	N/A
3	BC Hydro and Power Authority	Cameron Chung		Abstain	N/A
3	Berkshire Hathaway Energy - MidAmerican Energy Co.	Matthew Kloos		None	N/A
3	Black Hills Corporation	Josh Combs		Affirmative	N/A
3	Bonneville Power Administration	Ron Sporseen		Negative	N/A

© 2026 - NERC Ver 4.2.1.0 Machine Name: ATLVPEROWEB01

Segment	Organization	Voter	Designated Proxy	Ballot	NERC Memo
3	Buckeye Power, Inc.	Tom Schmidt	Ryan Strom	None	N/A
3	Central Electric Power Cooperative (Missouri)	Adam Weber		Affirmative	N/A
3	City Utilities of Springfield, Missouri	Jessica Morrissey		None	N/A
3	Colorado Springs Utilities	Hillary Dobson		Affirmative	N/A
3	Con Ed - Consolidated Edison Co. of New York	Arman Shiplu		Affirmative	N/A
3	Dominion - Dominion Virginia Power	Matt Bullard		Affirmative	N/A
3	Duke Energy - Florida Power Corporation	Marcelo Pesantez		Affirmative	N/A
3	Edison International - Southern California Edison Company	Todd Garwick		Affirmative	N/A
3	Entergy	James Keele		Affirmative	N/A
3	Evergy	Marcus Moor	Alan Kloster	Affirmative	N/A
3	Eversource Energy	Vicki O'Leary		Affirmative	N/A
3	Exelon	Kinte Whitehead		Affirmative	N/A
3	FirstEnergy - FirstEnergy Corporation	Aaron Ghodooshim		Affirmative	N/A
3	Georgia System Operations Corporation	Naresh Latchman		Affirmative	N/A
3	Great River Energy	Joseph Gatten		Affirmative	N/A
3	Imperial Irrigation District	Jorge Gutierrez	Denise Sanchez	Affirmative	N/A
3	KAMO Electric Cooperative	Tony Gott		Affirmative	N/A
3	Lincoln Electric System	Sam Christensen		Affirmative	N/A
3	Los Angeles Department of Water and Power	Fausto Serratos		Affirmative	N/A
3	M and A Electric Power Cooperative	Gary Dollins		Affirmative	N/A

© 2026 - NERC Ver 4.2.1.0 Machine Name: ATLVPEROWEB01

Segment	Organization	Voter	Designated Proxy	Ballot	NERC Memo
3	MEAG Power	Roger Brand	Rebika Yitna	Affirmative	N/A
3	MGE Energy - Madison Gas and Electric Co.	Ken Bartz		Abstain	N/A
3	Muscatine Power and Water	Seth Shoemaker		Affirmative	N/A
3	National Grid USA	Brian Shanahan		Affirmative	N/A
3	Nebraska Public Power District	Kevin Schawang		Affirmative	N/A
3	New York Power Authority	Richard Machado		Negative	N/A
3	NextEra Energy - Florida Power and Light Co.	Karen Demos		None	N/A
3	NiSource - Northern Indiana Public Service Co.	Steven Taddeucci		Negative	N/A
3	Northeast Missouri Electric Power Cooperative	Skyler Wiegmann		Affirmative	N/A
3	Northern California Power Agency	Michael Whitney	Chris Carnesi	None	N/A
3	NW Electric Power Cooperative, Inc.	Heath Henry		Affirmative	N/A
3	OGE Energy - Oklahoma Gas and Electric Co.	Donald Hargrove		Affirmative	N/A
3	Omaha Public Power District	David Heins		Affirmative	N/A
3	Orlando Utilities Commission	Ballard Mutters		None	N/A
3	OTP - Otter Tail Power Company	Tony Huseby		Affirmative	N/A
3	Pacific Gas and Electric Company	Sandra Ellis	Bob Cardle	Negative	N/A
3	Platte River Power Authority	Richard Kiess		None	N/A
3	Portland General Electric Co.	Jesse Fazio-Carrillo		None	N/A

© 2026 - NERC Ver 4.2.1.0 Machine Name: ATLVPEROWEB01

Segment	Organization	Voter	Designated Proxy	Ballot	NERC Memo
3	PPL - Louisville Gas and Electric Co.	James Frank		Affirmative	N/A
3	PSEG - Public Service Electric and Gas Co.	Christopher Murphy		None	N/A
3	Public Utility District No. 1 of Chelan County	Joyce Gundry		Negative	N/A
3	Puget Sound Energy, Inc.	Kelley Sargent		Affirmative	N/A
3	Sacramento Municipal Utility District	Nicole Looney	Tim Kelley	None	N/A
3	Salt River Project	Jennifer Bennett	Timothy Singh	Negative	N/A
3	Santee Cooper	Marty Watson		Abstain	N/A
3	Seattle City Light	Zenon O'young-Chu		Affirmative	N/A
3	Seminole Electric Cooperative, Inc.	Lewis Snyder		Negative	N/A
3	Sempra - San Diego Gas and Electric	Bryan Bennett		Negative	N/A
3	Sho-Me Power Electric Cooperative	Jarrod Murdaugh		Affirmative	N/A
3	Snohomish County PUD No. 1	Holly Chaney		Negative	N/A
3	Southern Company - Alabama Power Company	Joel Dembowski		Affirmative	N/A
3	Southern Indiana Gas and Electric Co.	Ryan Snyder		Affirmative	N/A
3	Tennessee Valley Authority	Justin Kuhlers		Affirmative	N/A
3	Tri-State G and T Association, Inc.	Amanda Skubal		Affirmative	N/A
3	TXNM Energy	Scott Thompson		Affirmative	N/A
3	Xcel Energy, Inc.	Nicholas Friebel		None	N/A
4	Alliant Energy Corporation Services, Inc.	Angela Dockter	Lexi Dobrzysnki	None	N/A

© 2026 - NERC Ver 4.2.1.0 Machine Name: ATLVPEROWEB01

Segment	Organization	Voter	Designated Proxy	Ballot	NERC Memo
4	Arkansas Electric Cooperative Corporation	Jenni Sudduth		None	N/A
4	Buckeye Power, Inc.	Jason Procuniar	Ryan Strom	None	N/A
4	City Utilities of Springfield, Missouri	Jerry Bradshaw		Affirmative	N/A
4	FirstEnergy - FirstEnergy Corporation	Sarah Miller		Affirmative	N/A
4	Georgia System Operations Corporation	Katrina Lyons		Affirmative	N/A
4	Northern California Power Agency	Marty Hostler		None	N/A
4	Oklahoma Municipal Power Authority	Michael Watt		None	N/A
4	Public Utility District No. 1 of Snohomish County	Kristen Eyman		None	N/A
4	Public Utility District No. 2 of Grant County, Washington	Karla Weaver		Abstain	N/A
4	Sacramento Municipal Utility District	Foung Mua	Tim Kelley	None	N/A
4	Seattle City Light	Robert Jones		Affirmative	N/A
4	Utility Services, Inc.	Carver Powers		Affirmative	N/A
4	WEC Energy Group, Inc.	Candace Morakinyo		None	N/A
4	Western Power Pool	Kevin Conway		Abstain	N/A
5	AEP	Thomas Foltz		Affirmative	N/A
5	Ameren - Ameren Missouri	Sam Dwyer		Affirmative	N/A
5	APS - Arizona Public Service Co.	Andrew Smith		Affirmative	N/A
5	Associated Electric Cooperative, Inc.	Chuck Booth		Affirmative	N/A
5	Austin Energy	Michael Dillard		Affirmative	N/A
5	Avista - Avista Corporation	Glen Farmer		Affirmative	N/A

© 2026 - NERC Ver 4.2.1.0 Machine Name: ATLVPEROWEB01

Segment	Organization	Voter	Designated Proxy	Ballot	NERC Memo
5	BC Hydro and Power Authority	Vijay Raghunathan		Abstain	N/A
5	Berkshire Hathaway - NV Energy	Dwanique Spiller		Affirmative	N/A
5	Black Hills Corporation	Sheila Suurmeier		Affirmative	N/A
5	Buckeye Power, Inc.	Kevin Zemanek	Ryan Strom	None	N/A
5	California Department of Water Resources	ASM Mostafa		None	N/A
5	CMS Energy - Consumers Energy Company	David Greyerbiehl		Affirmative	N/A
5	Colorado Springs Utilities	Jeffrey Icke		Affirmative	N/A
5	Con Ed - Consolidated Edison Co. of New York	Michelle Pagano		Affirmative	N/A
5	Constellation	Marie Potter	Jamie Monette	Abstain	N/A
5	Cowlitz County PUD	Garrett Colkitt		None	N/A
5	Dairyland Power Cooperative	Tommy Drea		None	N/A
5	Dominion - Dominion Resources, Inc.	Barbara Marion		Affirmative	N/A
5	DTE Energy	George Goddard		None	N/A
5	Duke Energy	Dale Goodwine		Affirmative	N/A
5	Edison International - Southern California Edison Company	Robert Blackney		Affirmative	N/A
5	Electric Power Supply Association	Bill Zuretti		None	N/A
5	Entergy - Entergy Services, Inc.	Gail Golden		Affirmative	N/A
5	Evergy	Jeremy Harris	Alan Kloster	Affirmative	N/A
5	FirstEnergy - FirstEnergy Corporation	Matthew Augustin		Affirmative	N/A

© 2026 - NERC Ver 4.2.1.0 Machine Name: ATLVPEROWEB01

Segment	Organization	Voter	Designated Proxy	Ballot	NERC Memo
5	Great River Energy	Jacalynn Bentz		Affirmative	N/A
5	Greybeard Compliance Services, LLC	Mike Gabriel		Abstain	N/A
5	Hydro-Quebec (HQ)	Junji Yamaguchi	Chantal Mazza	Affirmative	N/A
5	Imperial Irrigation District	Tino Zaragoza	Denise Sanchez	Affirmative	N/A
5	JEA	John Babik		Negative	N/A
5	Lincoln Electric System	Brittany Millard		Affirmative	N/A
5	Los Angeles Department of Water and Power	Robert Kerrigan		None	N/A
5	Lower Colorado River Authority	Mark Adams		Affirmative	N/A
5	National Grid USA	Trishona Manganiello		Affirmative	N/A
5	NB Power Corporation - New Brunswick Power Transmission Corporation	David Melanson		Affirmative	N/A
5	Nebraska Public Power District	Ronald Bender		Affirmative	N/A
5	New York Power Authority	Zahid Qayyum		Negative	N/A
5	NextEra Energy	Richard Vendetti		Affirmative	N/A
5	NiSource - Northern Indiana Public Service Co.	Kathryn Tackett		Negative	N/A
5	Northern California Power Agency	Jeremy Lawson	Chris Carnesi	None	N/A
5	NRG - NRG Energy, Inc.	Michael Scalise		Abstain	N/A
5	OGE Energy - Oklahoma Gas and Electric Co.	Patrick Wells		Affirmative	N/A
5	Oglethorpe Power Corporation	Donna Johnson		None	N/A
5	Oklahoma Municipal Power Authority	Patrick Tuttle		None	N/A

© 2026 - NERC Ver 4.2.1.0 Machine Name: ATLVPEROWEB01

Segment	Organization	Voter	Designated Proxy	Ballot	NERC Memo
5	Omaha Public Power District	Kayleigh Wilkerson		Affirmative	N/A
5	OTP - Otter Tail Power Company	Laura Dewey		Affirmative	N/A
5	Pacific Gas and Electric Company	Tyler Brun	Bob Cardle	Negative	N/A
5	Platte River Power Authority	Jim Grothmann		Affirmative	N/A
5	Portland General Electric Co.	Ryan Olson		Abstain	N/A
5	PPL - Louisville Gas and Electric Co.	Julie Hostrander		None	N/A
5	PSEG Nuclear LLC	Sharon Brown		None	N/A
5	Public Utility District No. 1 of Chelan County	Rebecca Wickel		Negative	N/A
5	Public Utility District No. 1 of Snohomish County	Becky Burden		Negative	N/A
5	Sacramento Municipal Utility District	Ryder Couch	Tim Kelley	None	N/A
5	Salt River Project	Matthew Jaramilla	Timothy Singh	Negative	N/A
5	Santee Cooper	Carey Salisbury		Abstain	N/A
5	Seattle City Light	Chris Shultz		None	N/A
5	Seminole Electric Cooperative, Inc.	Melanie Wong		Negative	N/A
5	Sempra - San Diego Gas and Electric	Jennifer Wright		Negative	N/A
5	Southern Company - Southern Company Generation	Leslie Burke		Affirmative	N/A
5	Southern Indiana Gas and Electric Co.	Rob Collins		Affirmative	N/A
5	Talen Generation, LLC	Donald Lock		Affirmative	N/A
5	Tennessee Valley Authority	Darren Boehm		Affirmative	N/A

© 2026 - NERC Ver 4.2.1.0 Machine Name: ATLVPEROWEB01

Segment	Organization	Voter	Designated Proxy	Ballot	NERC Memo
5	Tri-State G and T Association, Inc.	Sergio Banuelos		Affirmative	N/A
5	U.S. Bureau of Reclamation	Wendy Kalidass		Affirmative	N/A
5	Xcel Energy, Inc.	Gerry Huitt		Negative	N/A
6	AEP	Randy Calhoun		Affirmative	N/A
6	Ameren - Ameren Services	Robert Quinlivan		Affirmative	N/A
6	APS - Arizona Public Service Co.	Marcus Bortman		Affirmative	N/A
6	Arkansas Electric Cooperative Corporation	Bruce Walkup		Abstain	N/A
6	Associated Electric Cooperative, Inc.	Brian Ackermann		Affirmative	N/A
6	Austin Energy	Imane Mrini		Affirmative	N/A
6	Berkshire Hathaway - PacifiCorp	Lindsay Wickizer		Affirmative	N/A
6	Black Hills Corporation	Rachel Schuldt		Affirmative	N/A
6	Bonneville Power Administration	Tanner Brier		Negative	N/A
6	Cleco Corporation	Robert Hirchak	Clay Walker	Affirmative	N/A
6	Con Ed - Consolidated Edison Co. of New York	Jason Chandler		Affirmative	N/A
6	Constellation	Laura Brignola		Abstain	N/A
6	Dominion - Dominion Resources, Inc.	Alex Bekashoff		Affirmative	N/A
6	Duke Energy	John Sturgeon		Affirmative	N/A
6	Edison International - Southern California Edison Company	Stephanie Kenny		Affirmative	N/A
6	Entergy	Julie Hall		Affirmative	N/A
6	Evergy	Tiffany Lake	Alan Kloster	Affirmative	N/A

© 2026 - NERC Ver 4.2.1.0 Machine Name: ATLVPEROWEB01

Segment	Organization	Voter	Designated Proxy	Ballot	NERC Memo
6	FirstEnergy - FirstEnergy Corporation	Stacey Sheehan		Affirmative	N/A
6	Great River Energy	Brian Meloy		Affirmative	N/A
6	Imperial Irrigation District	Diana Torres	Denise Sanchez	Affirmative	N/A
6	Lincoln Electric System	Eric Ruskamp		Affirmative	N/A
6	Los Angeles Department of Water and Power	Anton Vu		Affirmative	N/A
6	Muscatine Power and Water	Nicholas Burns		Affirmative	N/A
6	New York Power Authority	Shelly Dineen		Negative	N/A
6	NextEra Energy - Florida Power and Light Co.	Justin Welty		Affirmative	N/A
6	NiSource - Northern Indiana Public Service Co.	Eugene Johnson		Negative	N/A
6	Northern California Power Agency	Dennis Sismaet	Chris Carnesi	None	N/A
6	OGE Energy - Oklahoma Gas and Electric Co.	Ashley F Stringer		Affirmative	N/A
6	Omaha Public Power District	Shonda Markus	David Ortiz	Affirmative	N/A
6	Platte River Power Authority	Sabrina Martz		None	N/A
6	Portland General Electric Co.	Stefanie Burke	Venessa Sneed	Abstain	N/A
6	Powerex Corporation	Raj Hundal		Abstain	N/A
6	PPL - Louisville Gas and Electric Co.	Jeremy Gesser		Affirmative	N/A
6	PSEG - PSEG Energy Resources and Trade LLC	Laura Wu		None	N/A
6	Public Utility District No. 1 of Chelan County	Tamarra Hardie		Negative	N/A
6	Sacramento Municipal Utility District	Charles Norton	Tim Kelley	None	N/A
6	Salt River Project	Israel Perez	Timothy Singh	Negative	N/A

© 2026 - NERC Ver 4.2.1.0 Machine Name: ATLVPEROWEB01

Segment	Organization	Voter	Designated Proxy	Ballot	NERC Memo
6	Santee Cooper	Richard Kirkpatrick		Abstain	N/A
6	Seattle City Light	Daren Brubaker		Affirmative	N/A
6	Seminole Electric Cooperative, Inc.	Bret Galbraith		None	N/A
6	Snohomish County PUD No. 1	Nima Miri		Negative	N/A
6	Southern Company - Southern Company Generation and Energy Marketing	Matthew O'neal		Affirmative	N/A
6	Southern Indiana Gas and Electric Co.	Kati Barr		Affirmative	N/A
6	Tennessee Valley Authority	Jeffrey Powell		Affirmative	N/A
6	Western Area Power Administration	Jennifer Neville		Negative	N/A
6	Xcel Energy, Inc.	Nicholas Detmer		Negative	N/A
10	Midwest Reliability Organization	Tasha Ward		Negative	N/A
10	New York State Reliability Council	Leka Gjonaj		None	N/A
10	Northeast Power Coordinating Council	Ruida Shu		Abstain	N/A
10	ReliabilityFirst	Tremayne Brown		Affirmative	N/A
10	SERC Reliability Corporation	Dave Krueger		None	N/A
10	Texas Reliability Entity, Inc.	Rachel Coyne		Affirmative	N/A
10	Western Electricity Coordinating Council	Steven Rueckert		None	N/A

Previous 1 Next

Showing 1 to 293 of 293 entries

© 2026 - NERC Ver 4.2.1.0 Machine Name: ATLVPEROWEB01

© 2026 - NERC Ver 4.2.1.0 Machine Name: ATLVPEROWEB01

BALLOT RESULTS

Ballot Name: Project 2023-06 CIP-014 Risk Assessment Refinement Implementation Plan FN 5 OT
Voting Start Date: 5/28/2026 2:06:34 PM
Voting End Date: 6/8/2026 8:00:00 PM
Ballot Type: OT
Ballot Activity: FN
Ballot Series: 5
Total # Votes: 230
Total Ballot Pool: 287
Quorum: 80.14
Quorum Established Date: 5/28/2026 2:21:49 PM
Weighted Segment Value: 83.31

Segment	Ballot Pool	Segment Weight	Affirmative Votes	Affirmative Fraction	Negative Votes w/ Comment	Negative Fraction w/ Comment	Negative Votes w/o Comment	Abstain	No Vote
Segment: 1	84	1	51	0.836	10	0.164	0	10	13
Segment: 2	7	0	0	0	0	0	0	6	1
Segment: 3	66	1	42	0.875	6	0.125	0	4	14
Segment: 4	14	0.4	4	0.4	0	0	0	2	8
Segment: 5	64	1	37	0.822	8	0.178	0	6	13
Segment: 6	45	1	30	0.882	4	0.118	0	6	5
Segment: 7	0	0	0	0	0	0	0	0	0
Segment: 8	0	0	0	0	0	0	0	0	0
Segment: 9	0	0	0	0	0	0	0	0	0

© 2026 - NERC Ver 4.2.1.0 Machine Name: ATLVPEROWEB01

Segment	Ballot Pool	Segment Weight	Affirmative Votes	Affirmative Fraction	Negative Votes w/ Comment	Negative Fraction w/ Comment	Negative Votes w/o Comment	Abstain	No Vote
Segment: 10	7	0.3	1	0.1	2	0.2	0	1	3
Totals:	287	4.7	165	3.916	30	0.784	0	35	57

BALLOT POOL MEMBERS

Show All entries Search: Search

Segment	Organization	Voter	Designated Proxy	Ballot	NERC Memo
1	AEP - AEP Service Corporation	Dennis Sauriol		Affirmative	N/A
1	Allete - Minnesota Power, Inc.	Hillary Creurer	Lori Frisk	Affirmative	N/A
1	Ameren - Ameren Services	Tamara Evey		Affirmative	N/A
1	American Transmission Company, LLC	Amy Wilke		Affirmative	N/A
1	APS - Arizona Public Service Co.	Daniela Atanasovski		Affirmative	N/A
1	Arkansas Electric Cooperative Corporation	Lily Green		None	N/A
1	Associated Electric Cooperative, Inc.	Mark Riley		Affirmative	N/A
1	Austin Energy	Thomas Standifur		Affirmative	N/A
1	Balancing Authority of Northern California	Kevin Smith	Tim Kelley	None	N/A

© 2026 - NERC Ver 4.2.1.0 Machine Name: ATLVPEROWEB01

Segment	Organization	Voter	Designated Proxy	Ballot	NERC Memo
1	BC Hydro and Power Authority	Adrian Andreoiu		Abstain	N/A
1	Berkshire Hathaway Energy - MidAmerican Energy Co.	Thomas Breen		Affirmative	N/A
1	Black Hills Corporation	Trevor Rombough		Affirmative	N/A
1	Bonneville Power Administration	Mai Truong		Negative	N/A
1	CenterPoint Energy Houston Electric, LLC	Daniela Hammons		Affirmative	N/A
1	Central Iowa Power Cooperative	Kelly Heims		Affirmative	N/A
1	City Utilities of Springfield, Missouri	Michael Buyce		Affirmative	N/A
1	Colorado Springs Utilities	Corey Walker		Affirmative	N/A
1	Con Ed - Consolidated Edison Co. of New York	Anna Heiss		Affirmative	N/A
1	Dairyland Power Cooperative	Karrie Schuldt		Affirmative	N/A
1	Dominion - Dominion Virginia Power	Steven Belle		Affirmative	N/A
1	Duke Energy	Katherine Street		Affirmative	N/A
1	Edison International - Southern California Edison Company	Hayk Zargaryan		Affirmative	N/A
1	Entergy	Brian Lindsey		Affirmative	N/A
1	Evergy	Kevin Frick	Alan Kloster	Affirmative	N/A
1	Eversource Energy	Joshua London		Affirmative	N/A
1	Exelon	Daniel Gacek		Affirmative	N/A
1	FirstEnergy - FirstEnergy Corporation	Theresa Ciancio		Affirmative	N/A
1	Georgia Transmission Corporation	Greg Davis	Stephen Stafford	Affirmative	N/A

© 2026 - NERC Ver 4.2.1.0 Machine Name: ATLVPEROWEB01

Segment	Organization	Voter	Designated Proxy	Ballot	NERC Memo
1	Glencoe Light and Power Commission	Terry Volkmann		Affirmative	N/A
1	Great River Energy	Mark Peterson		None	N/A
1	Hydro One Networks, Inc.	Aditya Menon	Oshara Narangoda	Abstain	N/A
1	Hydro-Quebec (HQ)	Nicolas Turcotte	Chantal Mazza	Affirmative	N/A
1	IDACORP - Idaho Power Company	Sean Steffensen		Abstain	N/A
1	Imperial Irrigation District	Jesus Sammy Alcaraz	Denise Sanchez	Affirmative	N/A
1	International Transmission Company Holdings Corporation	Michael Moltane	Gail Elliott	Negative	N/A
1	Lakeland Electric	Larry Watt		None	N/A
1	Lincoln Electric System	Josh Johnson		Affirmative	N/A
1	Long Island Power Authority	Isidoro Behar		Affirmative	N/A
1	Los Angeles Department of Water and Power	Jonathon Flores		None	N/A
1	Lower Colorado River Authority	Nathan Browder		Affirmative	N/A
1	M and A Electric Power Cooperative	William Price		Affirmative	N/A
1	Manitoba Hydro	Nazra Gladu		Affirmative	N/A
1	Minnkota Power Cooperative Inc.	Theresa Allard	Nikki Carson-Marquis	Negative	N/A
1	Muscatine Power and Water	Andrew Kurriger		Affirmative	N/A
1	N.W. Electric Power Cooperative, Inc.	Mark Ramsey		Affirmative	N/A
1	National Grid USA	Jacqueline Ryan		Affirmative	N/A
1	NB Power Corporation	Jeffrey Streifling		Affirmative	N/A
1	Nebraska Public Power District	Jamison Cawley		Affirmative	N/A

© 2026 - NERC Ver 4.2.1.0 Machine Name: ATLVPEROWEB01

Segment	Organization	Voter	Designated Proxy	Ballot	NERC Memo
1	Network and Security Technologies	Nick Lauriat		Abstain	N/A
1	New York Power Authority	Daniel Valle		Negative	N/A
1	NextEra Energy - Florida Power and Light Co.	Silvia Mitchell		Affirmative	N/A
1	NiSource - Northern Indiana Public Service Co.	Alison Nickells		Negative	N/A
1	Northeast Missouri Electric Power Cooperative	Brett Douglas		Affirmative	N/A
1	OGE Energy - Oklahoma Gas and Electric Co.	Terri Pyle		Affirmative	N/A
1	Oncor Electric Delivery	Byron Booker	Lucinda Bradshaw	None	N/A
1	OTP - Otter Tail Power Company	Charles Wicklund		Affirmative	N/A
1	Pacific Gas and Electric Company	Marco Rios	Bob Cardle	Negative	N/A
1	Pedernales Electric Cooperative, Inc.	Bradley Collard		Abstain	N/A
1	Platte River Power Authority	Marissa Archie		Affirmative	N/A
1	Portland General Electric Co.	Brooke Jockin		Abstain	N/A
1	PPL Electric Utilities Corporation	Michelle McCartney Longo		Affirmative	N/A
1	PSEG - Public Service Electric and Gas Co.	Karen Arnold		None	N/A
1	Public Utility District No. 1 of Chelan County	Maggie Bravo		Affirmative	N/A
1	Public Utility District No. 1 of Snohomish County	Alyssia Rhoads		Affirmative	N/A
1	Public Utility District No. 2 of Grant County, Washington	Joanne Anderson		Abstain	N/A

© 2026 - NERC Ver 4.2.1.0 Machine Name: ATLVPEROWEB01

Segment	Organization	Voter	Designated Proxy	Ballot	NERC Memo
1	Sacramento Municipal Utility District	Wei Shao	Tim Kelley	None	N/A
1	Salt River Project	Laura Somak	Timothy Singh	Affirmative	N/A
1	Santee Cooper	Franklin Settle		Abstain	N/A
1	SaskPower	Wayne Guttormson		Abstain	N/A
1	Seminole Electric Cooperative, Inc.	Khang Le		Negative	N/A
1	Sempra - San Diego Gas and Electric	Mo Derbas		Negative	N/A
1	Sho-Me Power Electric Cooperative	Oskar Olson		None	N/A
1	Southern Company - Southern Company Services, Inc.	Matt Carden		Affirmative	N/A
1	Southwestern Power Administration	Angela Wheat		Abstain	N/A
1	Sunflower Electric Power Corporation	Paul Mehlhaff		None	N/A
1	Tacoma Public Utilities (Tacoma, WA)	John Merrell	Jennie Wike	Affirmative	N/A
1	Tallahassee Electric (City of Tallahassee, FL)	Scott Langston		Affirmative	N/A
1	Tennessee Valley Authority	David Plumb		Affirmative	N/A
1	Tri-State G and T Association, Inc.	Donna Wood		None	N/A
1	U.S. Bureau of Reclamation	Phillip Martinez		Negative	N/A
1	Unisource - Tucson Electric Power Co.	Jessica Cordero		Affirmative	N/A
1	VELCO -Vermont Electric Power Company, Inc.	Randall Buswell		None	N/A
1	Western Area Power Administration	Kevin Chesley		None	N/A

© 2026 - NERC Ver 4.2.1.0 Machine Name: ATLVPEROWEB01

Segment	Organization	Voter	Designated Proxy	Ballot	NERC Memo
1	Xcel Energy, Inc.	Eric Barry		Negative	N/A
2	California ISO	Filipe Coelho		Abstain	N/A
2	Electric Reliability Council of Texas, Inc.	Kennedy Meier		Abstain	N/A
2	ISO New England, Inc.	John Pearson		Abstain	N/A
2	Midcontinent ISO, Inc.	Kirsten Rowley		Abstain	N/A
2	New York Independent System Operator	Gregory Campoli		None	N/A
2	PJM Interconnection, L.L.C.	Thomas Foster	Elizabeth Davis	Abstain	N/A
2	Southwest Power Pool, Inc. (RTO)	Joshua Phillips	Mia Wilson	Abstain	N/A
3	AEP	Jodi Yeary		Affirmative	N/A
3	Ameren - Ameren Services	David Jendras Sr	Nick Leathers	Affirmative	N/A
3	APS - Arizona Public Service Co.	Jessica Lopez		Affirmative	N/A
3	Arkansas Electric Cooperative Corporation	Ayslynn Mcavoy		Abstain	N/A
3	Associated Electric Cooperative, Inc.	Todd Bennett		Affirmative	N/A
3	Austin Energy	Lovita Griffin		None	N/A
3	Avista - Avista Corporation	Robert Follini		None	N/A
3	BC Hydro and Power Authority	Cameron Chung		Abstain	N/A
3	Berkshire Hathaway Energy - MidAmerican Energy Co.	Matthew Kloos		None	N/A
3	Black Hills Corporation	Josh Combs		Affirmative	N/A
3	Bonneville Power Administration	Ron Sporseen		Negative	N/A
3	Buckeye Power, Inc.	Tom Schmidt	Ryan Strom	None	N/A

© 2026 - NERC Ver 4.2.1.0 Machine Name: ATLVPEROWEB01

Segment	Organization	Voter	Designated Proxy	Ballot	NERC Memo
3	Central Electric Power Cooperative (Missouri)	Adam Weber		Affirmative	N/A
3	City Utilities of Springfield, Missouri	Jessica Morrissey		None	N/A
3	Colorado Springs Utilities	Hillary Dobson		Affirmative	N/A
3	Con Ed - Consolidated Edison Co. of New York	Arman Shiplu		Affirmative	N/A
3	Dominion - Dominion Virginia Power	Matt Bullard		Affirmative	N/A
3	Duke Energy - Florida Power Corporation	Marcelo Pesantez		Affirmative	N/A
3	Edison International - Southern California Edison Company	Todd Garwick		Affirmative	N/A
3	Entergy	James Keele		Affirmative	N/A
3	Evergy	Marcus Moor	Alan Kloster	Affirmative	N/A
3	Eversource Energy	Vicki O'Leary		Affirmative	N/A
3	Exelon	Kinte Whitehead		Affirmative	N/A
3	FirstEnergy - FirstEnergy Corporation	Aaron Ghodooshim		Affirmative	N/A
3	Georgia System Operations Corporation	Naresh Latchman		Affirmative	N/A
3	Great River Energy	Joseph Gatten		Affirmative	N/A
3	Imperial Irrigation District	Jorge Gutierrez	Denise Sanchez	Affirmative	N/A
3	KAMO Electric Cooperative	Tony Gott		Affirmative	N/A
3	Lincoln Electric System	Sam Christensen		Affirmative	N/A
3	Los Angeles Department of Water and Power	Fausto Serratos		Affirmative	N/A
3	M and A Electric Power Cooperative	Gary Dollins		Affirmative	N/A
3	MEAG Power	Roger Brand	Rebika Yitna	None	N/A

© 2026 - NERC Ver 4.2.1.0 Machine Name: ATLVPEROWEB01

Segment	Organization	Voter	Designated Proxy	Ballot	NERC Memo
3	MGE Energy - Madison Gas and Electric Co.	Ken Bartz		Abstain	N/A
3	Muscatine Power and Water	Seth Shoemaker		Affirmative	N/A
3	National Grid USA	Brian Shanahan		Affirmative	N/A
3	Nebraska Public Power District	Kevin Schawang		Affirmative	N/A
3	New York Power Authority	Richard Machado		Negative	N/A
3	NextEra Energy - Florida Power and Light Co.	Karen Demos		None	N/A
3	NiSource - Northern Indiana Public Service Co.	Steven Taddeucci		Negative	N/A
3	Northeast Missouri Electric Power Cooperative	Skyler Wiegmann		Affirmative	N/A
3	Northern California Power Agency	Michael Whitney	Chris Carnesi	None	N/A
3	NW Electric Power Cooperative, Inc.	Heath Henry		Affirmative	N/A
3	OGE Energy - Oklahoma Gas and Electric Co.	Donald Hargrove		Affirmative	N/A
3	Omaha Public Power District	David Heins		Affirmative	N/A
3	Orlando Utilities Commission	Ballard Mutters		None	N/A
3	OTP - Otter Tail Power Company	Tony Huseby		Affirmative	N/A
3	Pacific Gas and Electric Company	Sandra Ellis	Bob Cardle	Negative	N/A
3	Platte River Power Authority	Richard Kiess		None	N/A
3	Portland General Electric Co.	Jesse Fazio-Carrillo		None	N/A
3	PPL - Louisville Gas and Electric Co.	James Frank		Affirmative	N/A

© 2026 - NERC Ver 4.2.1.0 Machine Name: ATLVPEROWEB01

Segment	Organization	Voter	Designated Proxy	Ballot	NERC Memo
3	PSEG - Public Service Electric and Gas Co.	Christopher Murphy		None	N/A
3	Public Utility District No. 1 of Chelan County	Joyce Gundry		Affirmative	N/A
3	Puget Sound Energy, Inc.	Kelley Sargent		Affirmative	N/A
3	Sacramento Municipal Utility District	Nicole Looney	Tim Kelley	None	N/A
3	Salt River Project	Jennifer Bennett	Timothy Singh	Affirmative	N/A
3	Santee Cooper	Marty Watson		Abstain	N/A
3	Seminole Electric Cooperative, Inc.	Lewis Snyder		Negative	N/A
3	Sempra - San Diego Gas and Electric	Bryan Bennett		Negative	N/A
3	Sho-Me Power Electric Cooperative	Jarrod Murdaugh		Affirmative	N/A
3	Snohomish County PUD No. 1	Holly Chaney		Affirmative	N/A
3	Southern Company - Alabama Power Company	Joel Dembowski		Affirmative	N/A
3	Southern Indiana Gas and Electric Co.	Ryan Snyder		Affirmative	N/A
3	Tennessee Valley Authority	Justin Kuhlers		Affirmative	N/A
3	Tri-State G and T Association, Inc.	Amanda Skubal		Affirmative	N/A
3	TXNM Energy	Scott Thompson		Affirmative	N/A
3	Xcel Energy, Inc.	Nicholas Friebel		None	N/A
4	Alliant Energy Corporation Services, Inc.	Angela Dockter	Lexi Dobrzysnki	None	N/A
4	Arkansas Electric Cooperative Corporation	Jenni Sudduth		None	N/A
4	Buckeye Power, Inc.	Jason Procuniar	Ryan Strom	None	N/A

© 2026 - NERC Ver 4.2.1.0 Machine Name: ATLVPEROWEB01

Segment	Organization	Voter	Designated Proxy	Ballot	NERC Memo
4	City Utilities of Springfield, Missouri	Jerry Bradshaw		Affirmative	N/A
4	FirstEnergy - FirstEnergy Corporation	Sarah Miller		Affirmative	N/A
4	Georgia System Operations Corporation	Katrina Lyons		Affirmative	N/A
4	Northern California Power Agency	Marty Hostler		None	N/A
4	Oklahoma Municipal Power Authority	Michael Watt		None	N/A
4	Public Utility District No. 1 of Snohomish County	Kristen Eyman		None	N/A
4	Public Utility District No. 2 of Grant County, Washington	Karla Weaver		Abstain	N/A
4	Sacramento Municipal Utility District	Foung Mua	Tim Kelley	None	N/A
4	Utility Services, Inc.	Carver Powers		Affirmative	N/A
4	WEC Energy Group, Inc.	Candace Morakinyo		None	N/A
4	Western Power Pool	Kevin Conway		Abstain	N/A
5	AEP	Thomas Foltz		Affirmative	N/A
5	Ameren - Ameren Missouri	Sam Dwyer		Affirmative	N/A
5	APS - Arizona Public Service Co.	Andrew Smith		Affirmative	N/A
5	Associated Electric Cooperative, Inc.	Chuck Booth		Affirmative	N/A
5	Austin Energy	Michael Dillard		Affirmative	N/A
5	Avista - Avista Corporation	Glen Farmer		Affirmative	N/A
5	BC Hydro and Power Authority	Vijay Raghunathan		Abstain	N/A
5	Berkshire Hathaway - NV Energy	Dwanique Spiller		Affirmative	N/A

© 2026 - NERC Ver 4.2.1.0 Machine Name: ATLVPEROWEB01

Segment	Organization	Voter	Designated Proxy	Ballot	NERC Memo
5	Black Hills Corporation	Sheila Suurmeier		Affirmative	N/A
5	Buckeye Power, Inc.	Kevin Zemanek	Ryan Strom	None	N/A
5	California Department of Water Resources	ASM Mostafa		None	N/A
5	CMS Energy - Consumers Energy Company	David Greyerbiehl		Affirmative	N/A
5	Colorado Springs Utilities	Jeffrey Icke		Affirmative	N/A
5	Con Ed - Consolidated Edison Co. of New York	Michelle Pagano		Affirmative	N/A
5	Constellation	Marie Potter	Jamie Monette	Abstain	N/A
5	Cowlitz County PUD	Garrett Colkitt		None	N/A
5	Dairyland Power Cooperative	Tommy Drea		None	N/A
5	Dominion - Dominion Resources, Inc.	Barbara Marion		Affirmative	N/A
5	DTE Energy	George Goddard		None	N/A
5	Duke Energy	Dale Goodwine		Affirmative	N/A
5	Edison International - Southern California Edison Company	Robert Blackney		Affirmative	N/A
5	Electric Power Supply Association	Bill Zuretti		None	N/A
5	Entergy - Entergy Services, Inc.	Gail Golden		Affirmative	N/A
5	Evergy	Jeremy Harris	Alan Kloster	Affirmative	N/A
5	FirstEnergy - FirstEnergy Corporation	Matthew Augustin		Affirmative	N/A
5	Great River Energy	Jacalynn Bentz		Affirmative	N/A
5	Greybeard Compliance Services, LLC	Mike Gabriel		Abstain	N/A
5	Hydro-Québec (HQ)	Junji Yamaguchi	Chantal Mazza	Affirmative	N/A

© 2026 - NERC Ver 4.2.1.0 Machine Name: ATLVPEROWEB01

Segment	Organization	Voter	Designated Proxy	Ballot	NERC Memo
5	Imperial Irrigation District	Tino Zaragoza	Denise Sanchez	Affirmative	N/A
5	JEA	John Babik		Negative	N/A
5	Lincoln Electric System	Brittany Millard		Affirmative	N/A
5	Los Angeles Department of Water and Power	Robert Kerrigan		None	N/A
5	Lower Colorado River Authority	Mark Adams		Affirmative	N/A
5	National Grid USA	Trishona Manganiello		Affirmative	N/A
5	NB Power Corporation - New Brunswick Power Transmission Corporation	David Melanson		Affirmative	N/A
5	Nebraska Public Power District	Ronald Bender		Affirmative	N/A
5	New York Power Authority	Zahid Qayyum		Negative	N/A
5	NextEra Energy	Richard Vendetti		Affirmative	N/A
5	NiSource - Northern Indiana Public Service Co.	Kathryn Tackett		Negative	N/A
5	Northern California Power Agency	Jeremy Lawson	Chris Carnesi	None	N/A
5	NRG - NRG Energy, Inc.	Michael Scalise		Abstain	N/A
5	OGE Energy - Oklahoma Gas and Electric Co.	Patrick Wells		Affirmative	N/A
5	Oglethorpe Power Corporation	Donna Johnson		None	N/A
5	Oklahoma Municipal Power Authority	Patrick Tuttle		None	N/A
5	Omaha Public Power District	Kayleigh Wilkerson		Affirmative	N/A
5	OTP - Otter Tail Power Company	Laura Dewey		Affirmative	N/A
5	Pacific Gas and Electric Company	Tyler Brun	Bob Cardle	Negative	N/A

© 2026 - NERC Ver 4.2.1.0 Machine Name: ATLVPEROWEB01

Segment	Organization	Voter	Designated Proxy	Ballot	NERC Memo
5	Platte River Power Authority	Jim Grothmann		Affirmative	N/A
5	Portland General Electric Co.	Ryan Olson		Abstain	N/A
5	PPL - Louisville Gas and Electric Co.	Julie Hostrander		None	N/A
5	PSEG Nuclear LLC	Sharon Brown		None	N/A
5	Public Utility District No. 1 of Chelan County	Rebecca Wickel		Affirmative	N/A
5	Public Utility District No. 1 of Snohomish County	Becky Burden		Affirmative	N/A
5	Sacramento Municipal Utility District	Ryder Couch	Tim Kelley	None	N/A
5	Salt River Project	Matthew Jaramilla	Timothy Singh	Affirmative	N/A
5	Santee Cooper	Carey Salisbury		Abstain	N/A
5	Seminole Electric Cooperative, Inc.	Melanie Wong		Negative	N/A
5	Sempra - San Diego Gas and Electric	Jennifer Wright		Negative	N/A
5	Southern Company - Southern Company Generation	Leslie Burke		Affirmative	N/A
5	Southern Indiana Gas and Electric Co.	Rob Collins		Affirmative	N/A
5	Tennessee Valley Authority	Darren Boehm		Affirmative	N/A
5	Tri-State G and T Association, Inc.	Sergio Banuelos		Affirmative	N/A
5	U.S. Bureau of Reclamation	Wendy Kalidass		Negative	N/A
5	Xcel Energy, Inc.	Gerry Huitt		Negative	N/A
6	AEP	Randy Calhoun		Affirmative	N/A
6	Ameren - Ameren Services	Robert Quinlivan		Affirmative	N/A

© 2026 - NERC Ver 4.2.1.0 Machine Name: ATLVPEROWEB01

Segment	Organization	Voter	Designated Proxy	Ballot	NERC Memo
6	APS - Arizona Public Service Co.	Marcus Bortman		Affirmative	N/A
6	Arkansas Electric Cooperative Corporation	Bruce Walkup		Abstain	N/A
6	Associated Electric Cooperative, Inc.	Brian Ackermann		Affirmative	N/A
6	Austin Energy	Imane Mrini		Affirmative	N/A
6	Berkshire Hathaway - PacifiCorp	Lindsay Wickizer		Affirmative	N/A
6	Black Hills Corporation	Rachel Schuldt		Affirmative	N/A
6	Bonneville Power Administration	Tanner Brier		Negative	N/A
6	Cleco Corporation	Robert Hirchak	Clay Walker	Affirmative	N/A
6	Con Ed - Consolidated Edison Co. of New York	Jason Chandler		Affirmative	N/A
6	Constellation	Laura Brignola		Abstain	N/A
6	Dominion - Dominion Resources, Inc.	Alex Bekashoff		Affirmative	N/A
6	Duke Energy	John Sturgeon		Affirmative	N/A
6	Edison International - Southern California Edison Company	Stephanie Kenny		Affirmative	N/A
6	Entergy	Julie Hall		Affirmative	N/A
6	Evergy	Tiffany Lake	Alan Kloster	Affirmative	N/A
6	FirstEnergy - FirstEnergy Corporation	Stacey Sheehan		Affirmative	N/A
6	Great River Energy	Brian Meloy		Affirmative	N/A
6	Imperial Irrigation District	Diana Torres	Denise Sanchez	Affirmative	N/A
6	Lincoln Electric System	Eric Ruskamp		Affirmative	N/A
6	Los Angeles Department of Water and Power	Anton Vu		Affirmative	N/A

© 2026 - NERC Ver 4.2.1.0 Machine Name: ATLVPEROWEB01

Segment	Organization	Voter	Designated Proxy	Ballot	NERC Memo
6	Muscatine Power and Water	Nicholas Burns		Affirmative	N/A
6	New York Power Authority	Shelly Dineen		Negative	N/A
6	NextEra Energy - Florida Power and Light Co.	Justin Welty		Affirmative	N/A
6	NiSource - Northern Indiana Public Service Co.	Eugene Johnson		Negative	N/A
6	Northern California Power Agency	Dennis Sismaet	Chris Carnesi	None	N/A
6	OGE Energy - Oklahoma Gas and Electric Co.	Ashley F Stringer		Affirmative	N/A
6	Omaha Public Power District	Shonda Markus	David Ortiz	Affirmative	N/A
6	Platte River Power Authority	Sabrina Martz		None	N/A
6	Portland General Electric Co.	Stefanie Burke	Venessa Sneed	Abstain	N/A
6	Powerex Corporation	Raj Hundal		Abstain	N/A
6	PPL - Louisville Gas and Electric Co.	Jeremy Gesser		Affirmative	N/A
6	PSEG - PSEG Energy Resources and Trade LLC	Laura Wu		None	N/A
6	Public Utility District No. 1 of Chelan County	Tamarra Hardie		Affirmative	N/A
6	Sacramento Municipal Utility District	Charles Norton	Tim Kelley	None	N/A
6	Salt River Project	Israel Perez	Timothy Singh	Affirmative	N/A
6	Santee Cooper	Richard Kirkpatrick		Abstain	N/A
6	Seminole Electric Cooperative, Inc.	Bret Galbraith		None	N/A
6	Snohomish County PUD No. 1	Nima Miri		Affirmative	N/A

© 2026 - NERC Ver 4.2.1.0 Machine Name: ATLVPEROWEB01

Segment	Organization	Voter	Designated Proxy	Ballot	NERC Memo
6	Southern Company - Southern Company Generation and Energy Marketing	Matthew O'neal		Affirmative	N/A
6	Southern Indiana Gas and Electric Co.	Kati Barr		Affirmative	N/A
6	Tennessee Valley Authority	Jeffrey Powell		Affirmative	N/A
6	Western Area Power Administration	Jennifer Neville		Abstain	N/A
6	Xcel Energy, Inc.	Nicholas Detmer		Negative	N/A
10	Midwest Reliability Organization	Tasha Ward		Negative	N/A
10	New York State Reliability Council	Leka Gjonaj		None	N/A
10	Northeast Power Coordinating Council	Ruida Shu		Abstain	N/A
10	ReliabilityFirst	Tremayne Brown		Affirmative	N/A
10	SERC Reliability Corporation	Dave Krueger		None	N/A
10	Texas Reliability Entity, Inc.	Rachel Coyne		Negative	N/A
10	Western Electricity Coordinating Council	Steven Rueckert		None	N/A

Previous 1 Next

Showing 1 to 287 of 287 entries

© 2026 - NERC Ver 4.2.1.0 Machine Name: ATLVPEROWEB01

BALLOT RESULTS

Ballot Name: Project 2023-06 CIP-014 Risk Assessment Refinement CIP-014-4 | Non-Binding Poll FN 5 NB
Voting Start Date: 5/28/2026 2:06:49 PM
Voting End Date: 6/8/2026 8:00:00 PM
Ballot Type: NB
Ballot Activity: FN
Ballot Series: 5
Total # Votes: 220
Total Ballot Pool: 281
Quorum: 78.29
Quorum Established Date: 5/28/2026 2:21:57 PM
Weighted Segment Value: 78.31

Segment	Ballot Pool	Segment Weight	Affirmative Votes	Affirmative Fraction	Negative Votes	Negative Fraction	Abstain	No Vote
Segment: 1	81	1	39	0.765	12	0.235	16	14
Segment: 2	7	0	0	0	0	0	6	1
Segment: 3	64	1	33	0.786	9	0.214	8	14
Segment: 4	14	0.4	4	0.4	0	0	2	8
Segment: 5	64	1	31	0.795	8	0.205	11	14
Segment: 6	44	1	21	0.778	6	0.222	10	7
Segment: 7	0	0	0	0	0	0	0	0
Segment: 8	0	0	0	0	0	0	0	0
Segment: 9	0	0	0	0	0	0	0	0

© 2026 - NERC Ver 4.2.1.0 Machine Name: ATLVPEROWEB01

Segment	Ballot Pool	Segment Weight	Affirmative Votes	Affirmative Fraction	Negative Votes	Negative Fraction	Abstain	No Vote
Segment: 10	7	0.3	2	0.2	1	0.1	1	3
Totals:	281	4.7	130	3.723	36	0.977	54	61

BALLOT POOL MEMBERS

Show All entries Search: Search

Segment	Organization	Voter	Designated Proxy	Ballot	NERC Memo
1	AEP - AEP Service Corporation	Dennis Sauriol		Affirmative	N/A
1	Allete - Minnesota Power, Inc.	Hillary Creurer	Lori Frisk	Affirmative	N/A
1	Ameren - Ameren Services	Tamara Evey		Abstain	N/A
1	American Transmission Company, LLC	Amy Wilke		Affirmative	N/A
1	APS - Arizona Public Service Co.	Daniela Atanasovski		Affirmative	N/A
1	Arkansas Electric Cooperative Corporation	Lily Green		None	N/A
1	Associated Electric Cooperative, Inc.	Mark Riley		Affirmative	N/A
1	Austin Energy	Thomas Standifur		Affirmative	N/A
1	Balancing Authority of Northern California	Kevin Smith	Tim Kelley	None	N/A
1	BC Hydro and Power Authority	Adrian Andreoiu		Abstain	N/A

© 2026 - NERC Ver 4.2.1.0 Machine Name: ATLVPEROWEB01

Segment	Organization	Voter	Designated Proxy	Ballot	NERC Memo
1	Berkshire Hathaway Energy - MidAmerican Energy Co.	Thomas Breen		Affirmative	N/A
1	Black Hills Corporation	Trevor Rombough		Affirmative	N/A
1	Bonneville Power Administration	Mai Truong		Negative	N/A
1	CenterPoint Energy Houston Electric, LLC	Daniela Hammons		Affirmative	N/A
1	Central Iowa Power Cooperative	Kelly Heims		Affirmative	N/A
1	City Utilities of Springfield, Missouri	Michael Buyce		Affirmative	N/A
1	Colorado Springs Utilities	Corey Walker		Affirmative	N/A
1	Con Ed - Consolidated Edison Co. of New York	Anna Heiss		Affirmative	N/A
1	Dairyland Power Cooperative	Karrie Schuldt		Affirmative	N/A
1	Dominion - Dominion Virginia Power	Steven Belle		Affirmative	N/A
1	Duke Energy	Katherine Street		Affirmative	N/A
1	Edison International - Southern California Edison Company	Hayk Zargaryan		Affirmative	N/A
1	Entergy	Brian Lindsey		Affirmative	N/A
1	Evergy	Kevin Frick	Alan Kloster	Affirmative	N/A
1	Eversource Energy	Joshua London		Affirmative	N/A
1	Exelon	Daniel Gacek		Affirmative	N/A
1	FirstEnergy - FirstEnergy Corporation	Theresa Ciancio		Affirmative	N/A
1	Georgia Transmission Corporation	Greg Davis	Stephen Stafford	Affirmative	N/A
1	Glencoe Light and Power Commission	Terry Volkmann		Affirmative	N/A

© 2026 - NERC Ver 4.2.1.0 Machine Name: ATLVPEROWEB01

Segment	Organization	Voter	Designated Proxy	Ballot	NERC Memo
1	Great River Energy	Mark Peterson		None	N/A
1	Hydro One Networks, Inc.	Aditya Menon	Oshara Narangoda	Abstain	N/A
1	Hydro-Quebec (HQ)	Nicolas Turcotte	Chantal Mazza	Affirmative	N/A
1	IDACORP - Idaho Power Company	Sean Steffensen		Abstain	N/A
1	Imperial Irrigation District	Jesus Sammy Alcaraz	Denise Sanchez	Affirmative	N/A
1	International Transmission Company Holdings Corporation	Michael Moltane	Gail Elliott	Negative	N/A
1	Lakeland Electric	Larry Watt		None	N/A
1	Lincoln Electric System	Josh Johnson		Abstain	N/A
1	Long Island Power Authority	Isidoro Behar		Abstain	N/A
1	Los Angeles Department of Water and Power	Jonathon Flores		None	N/A
1	Lower Colorado River Authority	Nathan Browder		Affirmative	N/A
1	M and A Electric Power Cooperative	William Price		Affirmative	N/A
1	Minnkota Power Cooperative Inc.	Theresa Allard	Nikki Carson-Marquis	Negative	N/A
1	Muscatine Power and Water	Andrew Kurriger		Affirmative	N/A
1	N.W. Electric Power Cooperative, Inc.	Mark Ramsey		Affirmative	N/A
1	National Grid USA	Jacqueline Ryan		Affirmative	N/A
1	NB Power Corporation	Jeffrey Streifling		Affirmative	N/A
1	Nebraska Public Power District	Jamison Cawley		Abstain	N/A
1	Network and Security Technologies	Nick Lauriat		Abstain	N/A
1	New York Power Authority	Daniel Valle		Negative	N/A

© 2026 - NERC Ver 4.2.1.0 Machine Name: ATLVPEROWEB01

Segment	Organization	Voter	Designated Proxy	Ballot	NERC Memo
1	NextEra Energy - Florida Power and Light Co.	Silvia Mitchell		Abstain	N/A
1	NiSource - Northern Indiana Public Service Co.	Alison Nickells		Negative	N/A
1	Northeast Missouri Electric Power Cooperative	Brett Douglas		Affirmative	N/A
1	OGE Energy - Oklahoma Gas and Electric Co.	Terri Pyle		Affirmative	N/A
1	Oncor Electric Delivery	Byron Booker	Lucinda Bradshaw	None	N/A
1	Pacific Gas and Electric Company	Marco Rios	Bob Cardle	Negative	N/A
1	Pedernales Electric Cooperative, Inc.	Bradley Collard		Abstain	N/A
1	Platte River Power Authority	Marissa Archie		Affirmative	N/A
1	Portland General Electric Co.	Brooke Jockin		Abstain	N/A
1	PPL Electric Utilities Corporation	Michelle McCartney Longo		None	N/A
1	PSEG - Public Service Electric and Gas Co.	Karen Arnold		None	N/A
1	Public Utility District No. 1 of Chelan County	Maggie Bravo		Negative	N/A
1	Public Utility District No. 1 of Snohomish County	Alyssia Rhoads		Negative	N/A
1	Public Utility District No. 2 of Grant County, Washington	Joanne Anderson		Abstain	N/A
1	Sacramento Municipal Utility District	Wei Shao	Tim Kelley	None	N/A
1	Salt River Project	Laura Somak	Timothy Singh	Negative	N/A
1	Santee Cooper	Franklin Settle		Abstain	N/A
1	SaskPower	Wayne Guttormson		Abstain	N/A

© 2026 - NERC Ver 4.2.1.0 Machine Name: ATLVPEROWEB01

Segment	Organization	Voter	Designated Proxy	Ballot	NERC Memo
1	Seminole Electric Cooperative, Inc.	Khang Le		Negative	N/A
1	Sempra - San Diego Gas and Electric	Mo Derbas		Negative	N/A
1	Sho-Me Power Electric Cooperative	Oskar Olson		None	N/A
1	Southern Company - Southern Company Services, Inc.	Matt Carden		Affirmative	N/A
1	Southwestern Power Administration	Angela Wheat		Abstain	N/A
1	Sunflower Electric Power Corporation	Paul Mehlhaff		None	N/A
1	Tacoma Public Utilities (Tacoma, WA)	John Merrell	Jennie Wike	Negative	N/A
1	Tallahassee Electric (City of Tallahassee, FL)	Scott Langston		Affirmative	N/A
1	Tennessee Valley Authority	David Plumb		Abstain	N/A
1	Tri-State G and T Association, Inc.	Donna Wood		None	N/A
1	U.S. Bureau of Reclamation	Phillip Martinez		Affirmative	N/A
1	Unisource - Tucson Electric Power Co.	Jessica Cordero		Affirmative	N/A
1	VELCO -Vermont Electric Power Company, Inc.	Randall Buswell		None	N/A
1	Western Area Power Administration	Kevin Chesley		None	N/A
2	California ISO	Filipe Coelho		Abstain	N/A
2	Electric Reliability Council of Texas, Inc.	Kennedy Meier		Abstain	N/A
2	ISO New England, Inc.	John Pearson		Abstain	N/A
2	Midcontinent ISO, Inc.	Kirsten Rowley		Abstain	N/A

© 2026 - NERC Ver 4.2.1.0 Machine Name: ATLVPEROWEB01

Segment	Organization	Voter	Designated Proxy	Ballot	NERC Memo
2	New York Independent System Operator	Gregory Campoli		None	N/A
2	PJM Interconnection, L.L.C.	Thomas Foster	Elizabeth Davis	Abstain	N/A
2	Southwest Power Pool, Inc. (RTO)	Joshua Phillips	Mia Wilson	Abstain	N/A
3	AEP	Jodi Yeary		Affirmative	N/A
3	Ameren - Ameren Services	David Jendras Sr	Nick Leathers	Abstain	N/A
3	APS - Arizona Public Service Co.	Jessica Lopez		Affirmative	N/A
3	Arkansas Electric Cooperative Corporation	Ayslynn Mcavoy		Abstain	N/A
3	Associated Electric Cooperative, Inc.	Todd Bennett		Affirmative	N/A
3	Austin Energy	Lovita Griffin		None	N/A
3	Avista - Avista Corporation	Robert Follini		None	N/A
3	BC Hydro and Power Authority	Cameron Chung		Abstain	N/A
3	Berkshire Hathaway Energy - MidAmerican Energy Co.	Matthew Kloos		None	N/A
3	Black Hills Corporation	Josh Combs		Affirmative	N/A
3	Bonneville Power Administration	Ron Sporseen		Negative	N/A
3	Buckeye Power, Inc.	Tom Schmidt	Ryan Strom	None	N/A
3	Central Electric Power Cooperative (Missouri)	Adam Weber		Affirmative	N/A
3	City Utilities of Springfield, Missouri	Jessica Morrissey		None	N/A
3	Colorado Springs Utilities	Hillary Dobson		Affirmative	N/A
3	Con Ed - Consolidated Edison Co. of New York	Arman Shiplu		Affirmative	N/A

© 2026 - NERC Ver 4.2.1.0 Machine Name: ATLVPEROWEB01

Segment	Organization	Voter	Designated Proxy	Ballot	NERC Memo
3	Dominion - Dominion Virginia Power	Matt Bullard		Affirmative	N/A
3	Duke Energy - Florida Power Corporation	Marcelo Pesantez		Affirmative	N/A
3	Edison International - Southern California Edison Company	Todd Garwick		Affirmative	N/A
3	Entergy	James Keele		Affirmative	N/A
3	Evergy	Marcus Moor	Alan Kloster	Affirmative	N/A
3	Eversource Energy	Vicki O'Leary		Affirmative	N/A
3	Exelon	Kinte Whitehead		Affirmative	N/A
3	FirstEnergy - FirstEnergy Corporation	Aaron Ghodooshim		Affirmative	N/A
3	Georgia System Operations Corporation	Naresh Latchman		Affirmative	N/A
3	Great River Energy	Joseph Gatten		Abstain	N/A
3	Imperial Irrigation District	Jorge Gutierrez	Denise Sanchez	Affirmative	N/A
3	KAMO Electric Cooperative	Tony Gott		Affirmative	N/A
3	Lincoln Electric System	Sam Christensen		Abstain	N/A
3	Los Angeles Department of Water and Power	Fausto Serratos		Affirmative	N/A
3	M and A Electric Power Cooperative	Gary Dollins		Affirmative	N/A
3	MEAG Power	Roger Brand	Rebika Yitna	Affirmative	N/A
3	MGE Energy - Madison Gas and Electric Co.	Ken Bartz		Abstain	N/A
3	Muscatine Power and Water	Seth Shoemaker		Affirmative	N/A
3	National Grid USA	Brian Shanahan		Affirmative	N/A
3	Nebraska Public Power District	Kevin Schawang		Abstain	N/A

© 2026 - NERC Ver 4.2.1.0 Machine Name: ATLVPEROWEB01

Segment	Organization	Voter	Designated Proxy	Ballot	NERC Memo
3	New York Power Authority	Richard Machado		Negative	N/A
3	NextEra Energy - Florida Power and Light Co.	Karen Demos		None	N/A
3	NiSource - Northern Indiana Public Service Co.	Steven Taddeucci		Negative	N/A
3	Northeast Missouri Electric Power Cooperative	Skyler Wiegmann		Affirmative	N/A
3	Northern California Power Agency	Michael Whitney	Chris Carnesi	None	N/A
3	NW Electric Power Cooperative, Inc.	Heath Henry		Affirmative	N/A
3	OGE Energy - Oklahoma Gas and Electric Co.	Donald Hargrove		Affirmative	N/A
3	Omaha Public Power District	David Heins		Affirmative	N/A
3	Orlando Utilities Commission	Ballard Mutters		None	N/A
3	Pacific Gas and Electric Company	Sandra Ellis	Bob Cardle	Negative	N/A
3	Platte River Power Authority	Richard Kiess		None	N/A
3	Portland General Electric Co.	Jesse Fazio-Carrillo		None	N/A
3	PPL - Louisville Gas and Electric Co.	James Frank		None	N/A
3	PSEG - Public Service Electric and Gas Co.	Christopher Murphy		None	N/A
3	Public Utility District No. 1 of Chelan County	Joyce Gundry		Negative	N/A
3	Puget Sound Energy, Inc.	Kelley Sargent		Affirmative	N/A
3	Sacramento Municipal Utility District	Nicole Looney	Tim Kelley	None	N/A
3	Salt River Project	Jennifer Bennett	Timothy Singh	Negative	N/A

© 2026 - NERC Ver 4.2.1.0 Machine Name: ATLVPEROWEB01

Segment	Organization	Voter	Designated Proxy	Ballot	NERC Memo
3	Santee Cooper	Marty Watson		Abstain	N/A
3	Seminole Electric Cooperative, Inc.	Lewis Snyder		Negative	N/A
3	Sempra - San Diego Gas and Electric	Bryan Bennett		Negative	N/A
3	Sho-Me Power Electric Cooperative	Jarrod Murdaugh		Affirmative	N/A
3	Snohomish County PUD No. 1	Holly Chaney		Negative	N/A
3	Southern Company - Alabama Power Company	Joel Dembowski		Affirmative	N/A
3	Southern Indiana Gas and Electric Co.	Ryan Snyder		Affirmative	N/A
3	Tennessee Valley Authority	Justin Kuhlers		None	N/A
3	Tri-State G and T Association, Inc.	Amanda Skubal		Affirmative	N/A
3	TXNM Energy	Scott Thompson		Affirmative	N/A
4	Alliant Energy Corporation Services, Inc.	Angela Dockter	Lexi Dobrzysnki	None	N/A
4	Arkansas Electric Cooperative Corporation	Jenni Sudduth		None	N/A
4	Buckeye Power, Inc.	Jason Procuniar	Ryan Strom	None	N/A
4	City Utilities of Springfield, Missouri	Jerry Bradshaw		Affirmative	N/A
4	FirstEnergy - FirstEnergy Corporation	Sarah Miller		Affirmative	N/A
4	Georgia System Operations Corporation	Katrina Lyons		Affirmative	N/A
4	Northern California Power Agency	Marty Hostler		None	N/A
4	Oklahoma Municipal Power Authority	Michael Watt		None	N/A

© 2026 - NERC Ver 4.2.1.0 Machine Name: ATLVPEROWEB01

Segment	Organization	Voter	Designated Proxy	Ballot	NERC Memo
4	Public Utility District No. 1 of Snohomish County	Kristen Eyman		None	N/A
4	Public Utility District No. 2 of Grant County, Washington	Karla Weaver		Abstain	N/A
4	Sacramento Municipal Utility District	Foung Mua	Tim Kelley	None	N/A
4	Utility Services, Inc.	Carver Powers		Affirmative	N/A
4	WEC Energy Group, Inc.	Candace Morakinyo		None	N/A
4	Western Power Pool	Kevin Conway		Abstain	N/A
5	AEP	Thomas Foltz		Affirmative	N/A
5	Ameren - Ameren Missouri	Sam Dwyer		Abstain	N/A
5	APS - Arizona Public Service Co.	Andrew Smith		Affirmative	N/A
5	Associated Electric Cooperative, Inc.	Chuck Booth		Affirmative	N/A
5	Austin Energy	Michael Dillard		Affirmative	N/A
5	Avista - Avista Corporation	Glen Farmer		Affirmative	N/A
5	BC Hydro and Power Authority	Vijay Raghunathan		Abstain	N/A
5	Berkshire Hathaway - NV Energy	Dwanique Spiller		Affirmative	N/A
5	Black Hills Corporation	Sheila Suurmeier		Affirmative	N/A
5	Buckeye Power, Inc.	Kevin Zemanek	Ryan Strom	None	N/A
5	California Department of Water Resources	ASM Mostafa		None	N/A
5	CMS Energy - Consumers Energy Company	David Greyerbiehl		Affirmative	N/A
5	Colorado Springs Utilities	Jeffrey Icke		Affirmative	N/A
5	Con Ed - Consolidated Edison Co. of New York	Michelle Pagano		Affirmative	N/A

© 2026 - NERC Ver 4.2.1.0 Machine Name: ATLVPEROWEB01

Segment	Organization	Voter	Designated Proxy	Ballot	NERC Memo
5	Constellation	Marie Potter	Jamie Monette	Abstain	N/A
5	Cowlitz County PUD	Garrett Colkitt		None	N/A
5	Dairyland Power Cooperative	Tommy Drea		None	N/A
5	Dominion - Dominion Resources, Inc.	Barbara Marion		Affirmative	N/A
5	DTE Energy	George Goddard		None	N/A
5	Duke Energy	Dale Goodwine		Affirmative	N/A
5	Edison International - Southern California Edison Company	Robert Blackney		Affirmative	N/A
5	Electric Power Supply Association	Bill Zuretti		None	N/A
5	Entergy - Entergy Services, Inc.	Gail Golden		Affirmative	N/A
5	Evergy	Jeremy Harris	Alan Kloster	Affirmative	N/A
5	FirstEnergy - FirstEnergy Corporation	Matthew Augustin		Affirmative	N/A
5	Great River Energy	Jacalynn Bentz		Affirmative	N/A
5	Greybeard Compliance Services, LLC	Mike Gabriel		Abstain	N/A
5	Hydro-Quebec (HQ)	Junji Yamaguchi	Chantal Mazza	Affirmative	N/A
5	Imperial Irrigation District	Tino Zaragoza	Denise Sanchez	Affirmative	N/A
5	JEA	John Babik		Negative	N/A
5	Lincoln Electric System	Brittany Millard		Abstain	N/A
5	Los Angeles Department of Water and Power	Robert Kerrigan		None	N/A
5	Lower Colorado River Authority	Mark Adams		Affirmative	N/A
5	National Grid USA	Trishona Manganiello		Affirmative	N/A

© 2026 - NERC Ver 4.2.1.0 Machine Name: ATLVPEROWEB01

Segment	Organization	Voter	Designated Proxy	Ballot	NERC Memo
5	NB Power Corporation - New Brunswick Power Transmission Corporation	David Melanson		Affirmative	N/A
5	Nebraska Public Power District	Ronald Bender		Abstain	N/A
5	New York Power Authority	Zahid Qayyum		Negative	N/A
5	NextEra Energy	Richard Vendetti		Affirmative	N/A
5	NiSource - Northern Indiana Public Service Co.	Kathryn Tackett		Negative	N/A
5	Northern California Power Agency	Jeremy Lawson	Chris Carnesi	None	N/A
5	NRG - NRG Energy, Inc.	Michael Scalise		Abstain	N/A
5	OGE Energy - Oklahoma Gas and Electric Co.	Patrick Wells		Affirmative	N/A
5	Oglethorpe Power Corporation	Donna Johnson		None	N/A
5	Oklahoma Municipal Power Authority	Patrick Tuttle		None	N/A
5	Omaha Public Power District	Kayleigh Wilkerson		Affirmative	N/A
5	OTP - Otter Tail Power Company	Laura Dewey		Affirmative	N/A
5	Pacific Gas and Electric Company	Tyler Brun	Bob Cardle	Negative	N/A
5	Platte River Power Authority	Jim Grothmann		Affirmative	N/A
5	Portland General Electric Co.	Ryan Olson		Abstain	N/A
5	PPL - Louisville Gas and Electric Co.	Julie Hostrander		None	N/A
5	PSEG Nuclear LLC	Sharon Brown		None	N/A
5	Public Utility District No. 1 of Chelan County	Rebecca Wickel		Negative	N/A

© 2026 - NERC Ver 4.2.1.0 Machine Name: ATLVPEROWEB01

Segment	Organization	Voter	Designated Proxy	Ballot	NERC Memo
5	Public Utility District No. 1 of Snohomish County	Becky Burden		Negative	N/A
5	Sacramento Municipal Utility District	Ryder Couch	Tim Kelley	None	N/A
5	Salt River Project	Matthew Jaramilla	Timothy Singh	Negative	N/A
5	Santee Cooper	Carey Salisbury		Abstain	N/A
5	Seminole Electric Cooperative, Inc.	Melanie Wong		Abstain	N/A
5	Sempra - San Diego Gas and Electric	Jennifer Wright		Negative	N/A
5	Southern Company - Southern Company Generation	Leslie Burke		Affirmative	N/A
5	Southern Indiana Gas and Electric Co.	Rob Collins		Affirmative	N/A
5	Tennessee Valley Authority	Darren Boehm		None	N/A
5	Tri-State G and T Association, Inc.	Sergio Banuelos		Affirmative	N/A
5	U.S. Bureau of Reclamation	Wendy Kalidass		Affirmative	N/A
5	Xcel Energy, Inc.	Gerry Huitt		Abstain	N/A
6	AEP	Randy Calhoun		Affirmative	N/A
6	Ameren - Ameren Services	Robert Quinlivan		Abstain	N/A
6	APS - Arizona Public Service Co.	Marcus Bortman		Affirmative	N/A
6	Arkansas Electric Cooperative Corporation	Bruce Walkup		Abstain	N/A
6	Associated Electric Cooperative, Inc.	Brian Ackermann		Affirmative	N/A
6	Austin Energy	Imane Mrini		Affirmative	N/A
6	Berkshire Hathaway - PacifiCorp	Lindsay Wickizer		Affirmative	N/A

© 2026 - NERC Ver 4.2.1.0 Machine Name: ATLVPEROWEB01

Segment	Organization	Voter	Designated Proxy	Ballot	NERC Memo
6	Black Hills Corporation	Rachel Schuldt		Affirmative	N/A
6	Bonneville Power Administration	Tanner Brier		Negative	N/A
6	Con Ed - Consolidated Edison Co. of New York	Jason Chandler		Affirmative	N/A
6	Constellation	Laura Brignola		Abstain	N/A
6	Dominion - Dominion Resources, Inc.	Alex Bekashoff		Affirmative	N/A
6	Duke Energy	John Sturgeon		Affirmative	N/A
6	Edison International - Southern California Edison Company	Stephanie Kenny		Affirmative	N/A
6	Entergy	Julie Hall		Affirmative	N/A
6	Evergy	Tiffany Lake	Alan Kloster	Affirmative	N/A
6	FirstEnergy - FirstEnergy Corporation	Stacey Sheehan		Affirmative	N/A
6	Great River Energy	Brian Meloy		None	N/A
6	Imperial Irrigation District	Diana Torres	Denise Sanchez	Affirmative	N/A
6	Lincoln Electric System	Eric Ruskamp		Abstain	N/A
6	Los Angeles Department of Water and Power	Anton Vu		Affirmative	N/A
6	Muscatine Power and Water	Nicholas Burns		Affirmative	N/A
6	New York Power Authority	Shelly Dineen		Negative	N/A
6	NextEra Energy - Florida Power and Light Co.	Justin Welty		Affirmative	N/A
6	NiSource - Northern Indiana Public Service Co.	Eugene Johnson		Negative	N/A
6	Northern California Power Agency	Dennis Sismaet	Chris Carnesi	None	N/A
6	OGE Energy - Oklahoma Gas and Electric Co.	Ashley F Stringer		Affirmative	N/A

© 2026 - NERC Ver 4.2.1.0 Machine Name: ATLVPEROWEB01

Segment	Organization	Voter	Designated Proxy	Ballot	NERC Memo
6	Omaha Public Power District	Shonda Markus	David Ortiz	Affirmative	N/A
6	Platte River Power Authority	Sabrina Martz		None	N/A
6	Portland General Electric Co.	Stefanie Burke	Venessa Sneed	Abstain	N/A
6	Powerex Corporation	Raj Hundal		Abstain	N/A
6	PPL - Louisville Gas and Electric Co.	Jeremy Gesser		Abstain	N/A
6	PSEG - PSEG Energy Resources and Trade LLC	Laura Wu		None	N/A
6	Public Utility District No. 1 of Chelan County	Tamarra Hardie		Negative	N/A
6	Sacramento Municipal Utility District	Charles Norton	Tim Kelley	None	N/A
6	Salt River Project	Israel Perez	Timothy Singh	Negative	N/A
6	Santee Cooper	Richard Kirkpatrick		Abstain	N/A
6	Seattle City Light	Daren Brubaker		None	N/A
6	Seminole Electric Cooperative, Inc.	Bret Galbraith		None	N/A
6	Snohomish County PUD No. 1	Nima Miri		Negative	N/A
6	Southern Company - Southern Company Generation and Energy Marketing	Matthew O'neal		Affirmative	N/A
6	Southern Indiana Gas and Electric Co.	Kati Barr		Affirmative	N/A
6	Tennessee Valley Authority	Jeffrey Powell		Abstain	N/A
6	Western Area Power Administration	Jennifer Neville		Abstain	N/A
10	Midwest Reliability Organization	Tasha Ward		Negative	N/A

© 2026 - NERC Ver 4.2.1.0 Machine Name: ATLVPEROWEB01

Segment	Organization	Voter	Designated Proxy	Ballot	NERC Memo
10	New York State Reliability Council	Leka Gjonaj		None	N/A
10	Northeast Power Coordinating Council	Ruida Shu		Abstain	N/A
10	ReliabilityFirst	Tremayne Brown		Affirmative	N/A
10	SERC Reliability Corporation	Dave Krueger		None	N/A
10	Texas Reliability Entity, Inc.	Rachel Coyne		Affirmative	N/A
10	Western Electricity Coordinating Council	Steven Rueckert		None	N/A

Previous 1 Next

Showing 1 to 281 of 281 entries

© 2026 - NERC Ver 4.2.1.0 Machine Name: ATLVPEROWEB01

Exhibit G

Standard Drafting Team Roster, Project 2023-06 CIP-014 Risk Assessment Refinement

NERC
NORTH AMERICAN ELECTRIC RELIABILITY CORPORATION

Drafting Team Roster

Project 2023-06 CIP-014 Risk Assessment Refinement

	Name	Entity
Chair	Karl Perman	CIP Corps
Vice Chair	Bart White	Duke Energy
Members	Qamar Arsalan	Public Service Electric & Gas
	Kirpal Bahra	Hydro One Networks Inc.
	Per-Anders Lof	National Grid USA
	Joel Rogers	SERC Reliability Corporation
	David Schooley	Exelon Corporation
	Mina Turner	American Electric Power Service Corporation
PMOS Liaisons	Claudine Fritz	Exelon Corporation
	Terri Pyle	OGE
NERC Staff	Ben Wu – Standards Developer	North American Electric Reliability Corporation
	Sarah Crawford – Counsel	North American Electric Reliability Corporation
	Davis Jelusich – CIP Assurance Advisor	North American Electric Reliability Corporation
	Derek Kassimer – CIP Assurance, Compliance & Certification General	North American Electric Reliability Corporation